Appendix F

Transportation and Circulation

TRAFFIC IMPACT ANALYSIS FOR NEWPORT BANNING RANCH IN THE CITY OF NEWPORT BEACH

Prepared for:

City of Newport Beach
3300 Newport Boulevard
Newport Beach, California 92663

Prepared by:

Kimley-Horn and Associates, Inc.
765 The City Drive
Suite 400
Orange, California 92868

June, 2011

NEWPORT BANNING RANCH
TRAFFIC IMPACT ANALYSIS

TABLE OF CONTENTS

INTRODUCTION 1
PROJECT DESCRIPTION 1
STUDY METHODOLOGY 6
Study Area 6
Analysis Methodology 9
Performance Criteria 9
Threshold of Significance 10
Study Scenarios 11
EXISTING TRANSPORTATION SYSTEM 11
Roadway Characteristics 11
Public Transportation Service 15
EXISTING TRAFFIC CONDITIONS 18
Existing Intersection Improvements 18
Existing Traffic Volumes 18
Existing Intersection Analysis 18
PROJECT TRAFFIC 24
Trip Generation 24
Proposed Project Trip Generation 24
Bluff Road Alternative Trip Generation 26
Phase 1 Trip Generation 26
Project Trip Distribution 28
EXISTING PLUS PROJECT CONDITIONS 28
Existing Plus Proposed Project 28
Existing Plus Project – Bluff Road Alternative 32
FUTURE CONDITIONS 37
Year 2016 Traffic Phasing Ordinance (TPO) Analysis 37
TPO One Percent Analysis 39
Year 2016 TPO without Project Conditions 39
Project Impact – TPO Analysis 44
Project Impact – TPO Analysis 44
Year 2016 with Proposed Project – TPO Analysis 44
Year 2016 with Project – Bluff Road Alternative – TPO Analysis 48
Year 2016 with Phase 1 Project – TPO Analysis 52
Year 2016 Cumulative Conditions Analysis 56
Year 2016 Cumulative Conditions without Project 56
Year 2016 Cumulative Conditions with Proposed Project 64
Signal Warrants 68
Year 2016 Cumulative Conditions with Project – Bluff Road Alternative 68
Year 2016 Cumulative Conditions with Phase 1 Project 73
GENERAL PLAN BUILD-OUT 77
General Plan Build-out Traffic Forecasts 77

Network Assumptions 77
19th Street Bridge 77
State Route 55 Freeway Extension 77
General Plan Build-out Conditions Analysis 80
General Plan Build-out – No Development 80
General Plan Build-out with Project 84
General Plan Build-out with Project – Bluff Road Alternative 88
General Plan Build-out with Project and Full MPAH Network 92
General Plan Build-out – Open Space Alternative 98
General Plan Build-out – Open Space Alternative without Bluff Road 101
PROJECT IMPACT MITIGATION 104
Project Impact Mitigation – Existing Plus Project 104
Existing Plus Project 104
Existing Plus Project – Bluff Road Alternative 105
Project Impact Mitigation – Traffic Phasing Ordinance (TPO) 107
Year 2016 with Proposed Project – TPO 107
Year 2016 with Project – Bluff Road Alternative – TPO 109
Year 2016 with Phase 1 Project – TPO 109
Project Impact Mitigation – Year 2016 Cumulative Conditions 111
Year 2016 Cumulative Conditions with Proposed Project 111
Year 2016 Cumulative Conditions with Project – Bluff Road Alternative 111
Year 2016 Cumulative Conditions with Phase 1 Project 114
Project Impact Mitigation – General Plan Build-out Analysis 114
General Plan Build-out with Proposed Project 114
General Plan Build-out with Project – Bluff Road Alternative 117
PROJECT RESPONSIBILITY FOR IMPACT MITIGATION 119
City of Newport Beach TPO Effective Capacity Fair Share Determination 119
CONGESTION MANAGEMENT PROGRAM (CMP) 121
ANALYSIS OF STATE HIGHWAY FACILITIES 123
Traffic Impact Criteria 124
State Highway Intersection Analysis 124
Existing Conditions 125
Year 2016 Cumulative Conditions without Project 125
Year 2016 Cumulative Conditions with Proposed Project 125
Year 2016 Cumulative Conditions with Project – Bluff Road Alternative 129
General Plan Build-out – No Development 129
General Plan Build-out with Project 132
General Plan Build-out with Project – Bluff Road Alternative 132
Freeway Mainline Analysis 135
Existing Conditions 136
Year 2016 Cumulative Without Project 136
Year 2016 Cumulative With Project 136
Year 2016 Cumulative With Project – Bluff Road Alternative 136
SITE ACCESS AND ON-SITE CIRCULATION 141
CONSTRUCTION TRAFFIC 142

SPECIAL ISSUES 144
Average Daily Traffic on Local Streets 144
Screenline Analysis for Existing Conditions 145
Screenline Analysis for Build-out Conditions 148
Forecast Conditions Without the 19th Street Bridge 150
General Plan Build-out with Project –No 19th Street Bridge 150
General Plan Build-out with Project – Bluff Road Alternative – No 19th Street Bridge 153
REDUCED DEVELOPMENT ALTERNATIVES 153
SUMMARY OF FINDINGS AND CONCLUSIONS 156

APPENDICES

APPENDIX A – Traffic Count Data Collection Sheets
APPENDIX B – Intersection Analysis Worksheets – Existing Conditions
APPENDIX C – Internal Capture Worksheets
APPENDIX D – Committed and Cumulative Projects Information
APPENDIX E – 1% Worksheets – TPO Analysis
APPENDIX F – Intersection Analysis Worksheets – TPO Analysis
APPENDIX G – Intersection Analysis Worksheets – Cumulative Analysis
APPENDIX H– Signal Warrant Worksheets
APPENDIX I – Intersection Analysis Worksheets – General Plan Build-out
APPENDIX J –MPAH Network Alternative
APPENDIX K – Mitigation Improvement Worksheets and Conceptual Plans
APPENDIX L – Intersection Analysis Worksheets – State Highway Analysis
APPENDIX M – Freeway Analysis Worksheets
APPENDIX N –Development Alternatives Trip Generation Estimates

LIST OF FIGURES

Figure 1 – Vicinity Map 2
Figure 2 – Newport Banning Ranch Project Site Plan 3
Figure 3 – Newport Banning Ranch Bluff Road Alternative Site Plan 4
Figure 4 – Newport Banning Ranch Phase 1 Site Plan 5
Figure 5 – Study Intersections 8
Figure 6 – Existing Transit Service 16
Figure 7 – Study Intersection Lane Configuration and Traffic Control 19
Figure 8 – Deficient Intersections – Existing Conditions 23
Figure 9 – Project Trip Distribution 29
Figure 10 – Deficient Intersections – Existing Plus Project Conditions 33
Figure 11 – Deficient Intersections – Existing Plus Project – Bluff Road Alternative Conditions 36
Figure 12 – Deficient Intersections – Year 2016 without Project – TPO Analysis 43
Figure 13 – Deficient Intersections – Year 2016 with Proposed Project – TPO Analysis 47
Figure 14 – Deficient Intersections – Year 2016 with Project – Bluff Road Alternative – TPO Analysis 51
Figure 15 – Deficient Intersections – Year 2016 with Phase 1 Project – TPO Analysis 55
Figure 16 – Location of Cumulative Projects 59
Figure 17 – Deficient Intersections – Year 2016 Cumulative Conditions without Project 63
Figure 18 – Deficient Intersections – Year 2016 Cumulative Conditions with Proposed Project 67
Figure 19 – Deficient Intersections – Year 2016 Cumulative with Project – Bluff Road Alternative 72
Figure 20 – Deficient Intersections – Year 2016 Cumulative Conditions with Phase 1 Project 76
Figure 21 – General Plan Build-out Lane Configuration and Traffic Control 78
Figure 22 – Deficient Intersections – General Plan Build-out – No Development 83
Figure 23 – Deficient Intersections – General Plan Build-out with Project 87
Figure 24 – Deficient Intersections – General Plan Build-out with Project – Bluff Road Alternative 91
Figure 25 – City of Newport Beach Master Plan of Streets and Highways 93
Figure 26 – County of Orange MPAH Map in the Project Vicinity 94
Figure 27 – County of Orange CMP Highway System Map 122
Figure 28 – Screenline Location for Daily Roadway Analysis 146

LIST OF TABLES

Table 1 – Summary of Intersection Operations – Existing Conditions 21
Table 2 – Summary of Project Trip Generation – Newport Banning Ranch 25
Table 3 – Summary of Project Trip Generation – Newport Banning Ranch – Phase 1 27
Table 4 – Summary of Intersection Operations – Existing Plus Proposed Project 30
Table 5 – Summary of Intersection Operations – Existing Plus Project – Bluff Road Alternative 34
Table 6 – List of Committed Projects 38
Table 7 – Summary of 1% Analysis – TPO Analysis 40
Table 8 – Summary of Intersection Operations – Year 2016 without Project – TPO Analysis 41
Table 9 – Summary of Intersection Operations – Year 2016 with Proposed Project – TPO Analysis 45
Table 10 – Summary of Intersection Operation – Year 2016 w/ Project Bluff Road Alternative – TPO Analysis 49
Table 11 – Summary of Intersection Operations – Year 2016 with Phase 1 Project – TPO Analysis 53
Table 12 – Summary of Cumulative Projects 57
Table 13 – Summary of Cumulative Projects Trip Generation 60
Table 14 – Summary of Intersection Operations – Year 2016 Cumulative Conditions without Project 61
Table 15 – Summary of Intersection Operations – Year 2016 Cumulative Conditions w/ Proposed Project 65
Table 16 – Summary of Signal Warrant Analysis 69
Table 17 – Summary of Intersection Operation – Year 2016 Cumulative w/ Project – Bluff Road Alternative 70
Table 18 – Summary of Intersection Operations – Year 2016 Cumulative Conditions with Phase 1 Project 74
Table 19 – Summary of Intersection Operations – General Plan Build-out – No Development 81
Table 20 – Intersection Operations – General Plan Build-out with Project 85
Table 21 – Summary of Intersection Operation – General Plan Build-out w/ Project – Bluff Road Alternative 89
Table 22 – Summary of Intersection Operations – General Plan Build-out with Project and Full MPAH Network 96
Table 23 – Summary of Intersection Operations – General Plan Build-out with Open Space with Bluff Road 99
Table 24 – Intersection Operations – General Plan Build-out Open Space Alternative without Bluff Road 102
Table 25 – Existing Plus Project – Impact Mitigation 106
Table 26 – Year 2016 with Project – TPO Analysis – Impact Mitigation 108
Table 27 – Year 2016 with Phase 1 Project – TPO Analysis – Impact Mitigation 110
Table 28 – Year 2016 Cumulative Conditions with Proposed Project – Impact Mitigation 112
Table 29 – Year 2016 Cumulative with Project – Bluff Road Alternative – Impact Mitigation 113
Table 30 – Year 2016 Cumulative with Phase 1 Project – Impact Mitigation 115
Table 31 – General Plan Build-out with Proposed Project – Impact Mitigation 116
Table 32 – General Plan Build-out with Project – Bluff Road Alternative – Impact Mitigation 118
Table 33 – Traffic Phasing Ordinance Effective Capacity Fair Share Calculation 120
Table 34 – Summary of State Highway Intersection Operations – Existing Conditions 126
Table 35 – Summary of State Highway Intersection Operation – Year 2016 Cumulative Conditions w/o Project 127
Table 36 – Summary of State Highway Intersection Operation – Year 2016 Cumulative Conditions w/ Project 128
Table 37 – Summary of State Highway Intersection Operation – 2016 Cumulative w/ Proj Bluff Rd Alternative 130
Table 38 – Summary of State Highway Intersection Operations – General Plan Build-out – No Development 131
Table 39 – Summary of State Highway Intersection Operations – General Plan Build-out with Project 133
Table 40 – Summary of State Highway Intersection Operation – Build-out w/ Project – Bluff Road Alternative 134
Table 41 – Summary of Freeway Mainline Operation – Existing Conditions 137
Table 42 – Summary of Freeway Mainline Operation – Year 2016 Cumulative Without Project 138
Table 43 – Summary of Freeway Mainline Operation – Year 2016 Cumulative With Project 139
Table 44 – Summary of Freeway Mainline Operation, 2016 Cumulative with Project – Bluff Road Alternative 140

Table 45 – Average Daily Traffic Screenline Analysis – Existing Network Conditions 147
Table 46 – Average Daily Traffie Screenline Analysis – Build-out Network Conditions 149
Table 47 – Summary of Intersection Operations – Build-out with Project – No 19th Street Bridge 151
Table 48 – Summary of Intersection Operation – Build-out w/ Project Alternative – No 19th Street Bridge 154

NEWPORT BANNING RANCH
TRAFFIC IMPACT ANALYSIS

INTRODUCTION

This traffic impact analysis has been prepared to provide an analysis of the traffic-related impacts associated with the proposed Newport Banning Ranch development. This report has been prepared in accordance with the City of Newport Beach Traffic Phasing Ordinance (TPO) traffic impact study requirements, County of Orange Congestion Management Program (CMP) requirements, and in support of the environmental documentation, per California Environmental Quality Act (CEQA) requirements.

PROJECT DESCRIPTION

The Newport Banning Ranch project site is located on the north side of West Coast Highway, west of Superior Avenue in the City of Newport Beach. A vicinity map is provided on **Figure 1**. The 401-acre site is generally bound by Talbert Nature Preserve/Regional Park on the north; by West Coast Highway to the south; by residential, light industrial, and office development to the east; and by residential and wetlands and the Santa Ana River to the west. The site is primarily undeveloped but has been in active operation as an oil field since the mid-1940's.

The proposed project would allow development of up to 1,375 residential dwelling units, 75,000 square feet of commercial development, 75 resort hotel units, and 28 acres of community park with active sports and recreation uses on the site. A copy of the project site plan is provided on **Figure 2.**

There is currently no public access across the project site. Primary access to the Newport Banning Ranch site is proposed to be from West Coast Highway via a new roadway, labeled Bluff Road on the site plan. This is consistent with the City of Newport Beach General Plan Circulation Element and the Orange County Master Plan of Arterial Highways (MPAH), which depict a north-south roadway through the project site, connecting Coast Highway on the south with 19th Street on the north. (The roadway shown on the City's Circulation Element is not labeled; the roadway shown on the MPAH is labeled "Balboa".) Bluff Road would serve as the primary roadway through the project site, with a local on-site street system and connections to proposed extensions of 15th, 16th, 17th, and 19th Streets. The project also proposes a pedestrian bridge from the project site over West Coast Highway.

One project alternative, referred to as the Bluff Road Alternative, assumes the same development levels as the proposed project, with Bluff Road limited to the segment from West Coast Highway to the limits of the project development, terminating just north of 17th Street. A copy of the project site plan for the Bluff Road Alternative is provided on **Figure 3.**

This report also provides an analysis of the first phase of the project (Phase 1). A copy of the Phase 1 site plan is provided on **Figure 4.**

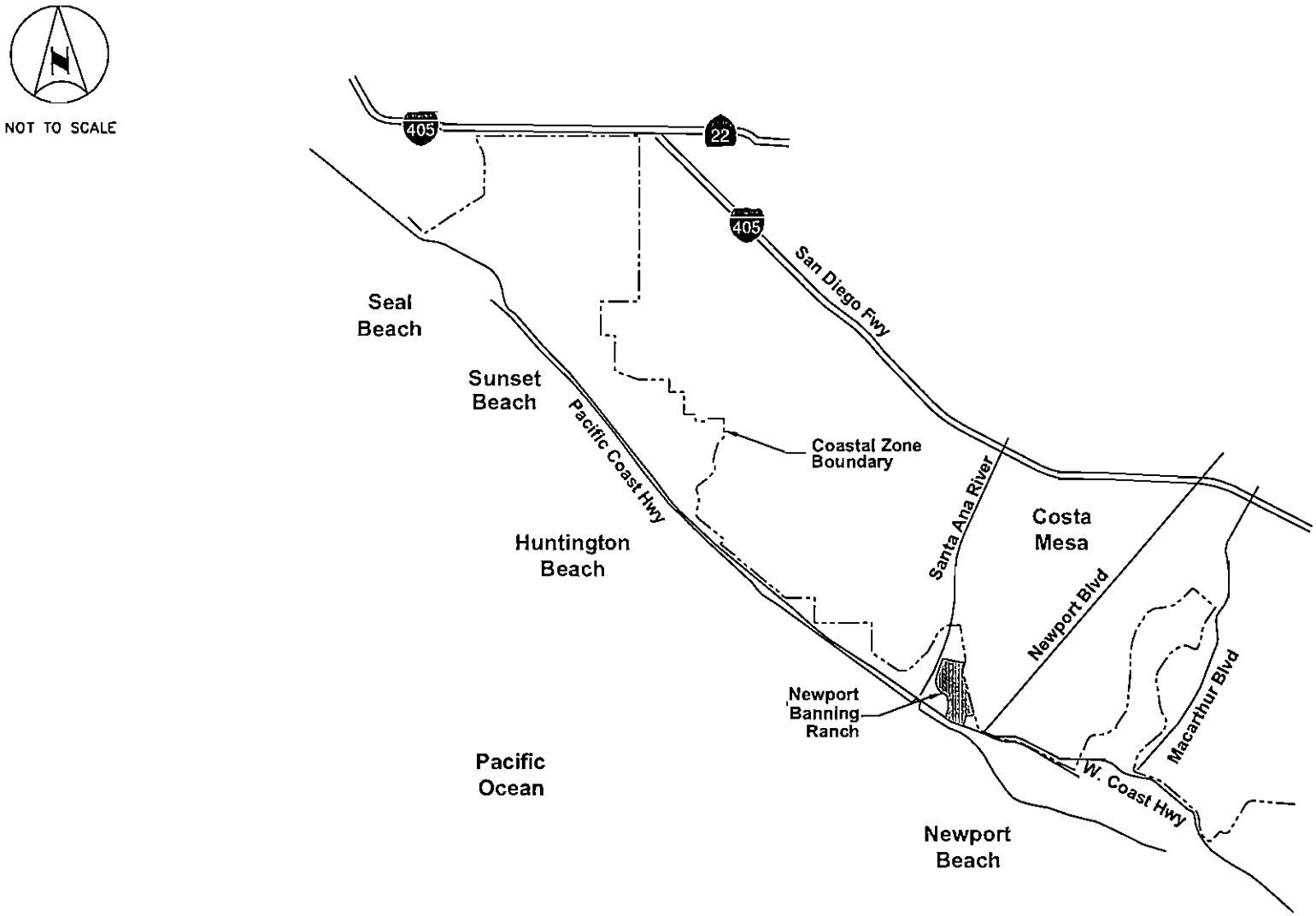

FIGURE 1
VICINITY MAP

FILENAME: Jun 30, 2011 – 4:23pm K:\ORA_TPTO\ZSAC\Projects\Banning Ranch\CAD\8th Submittal.dwg

Kimley-Horn and Associates, Inc.

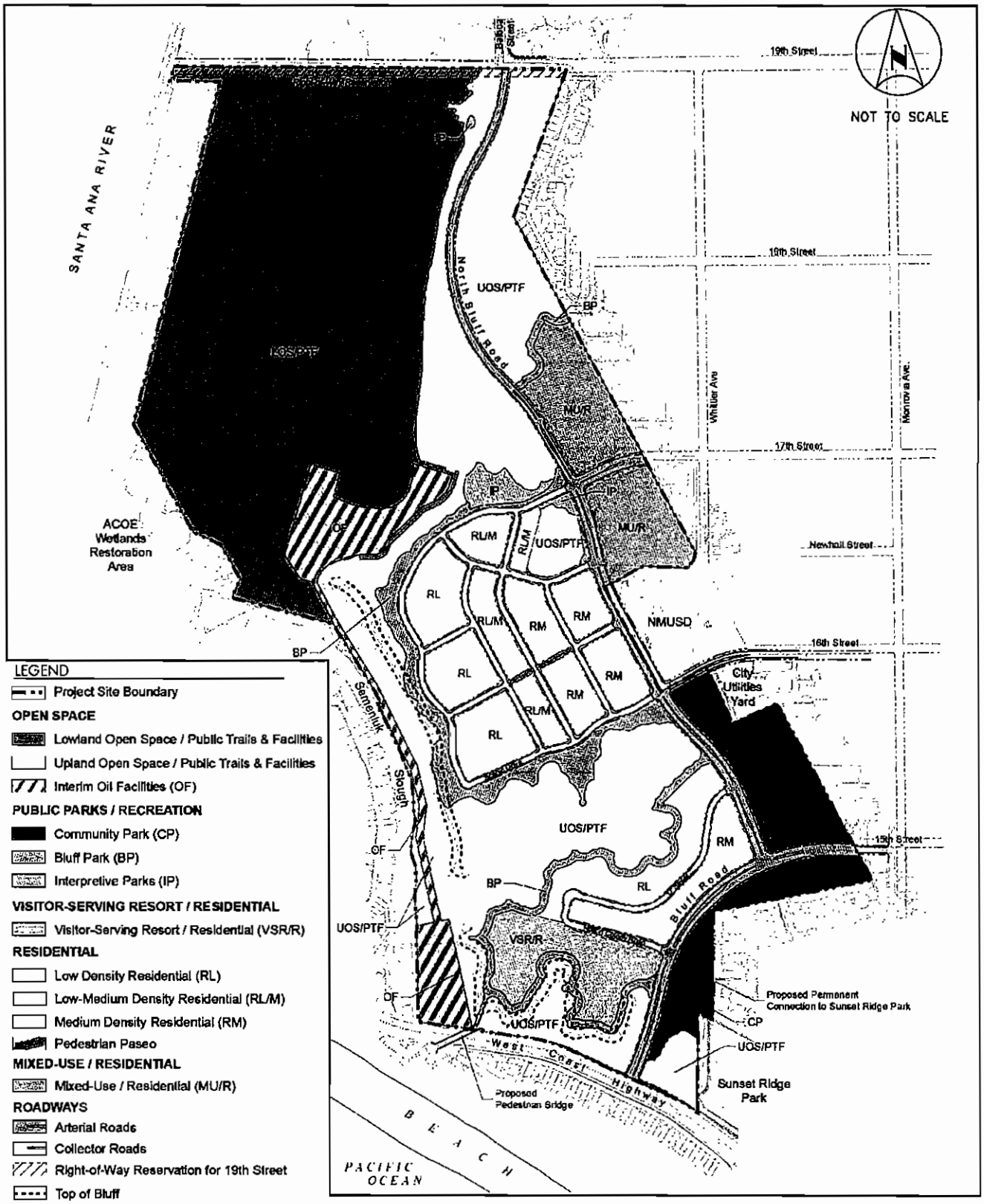

FIGURE 2
NEWPORT BANNING RANCH
PROJECT SITE PLAN

Kimley-Horn and Associates, Inc.

FILENAME: Jun 30, 2011 - 5:22pm K:\ORA_TP70\ZSAC\Projects\Banning Ranch\CAD\6th Submittal.dwg

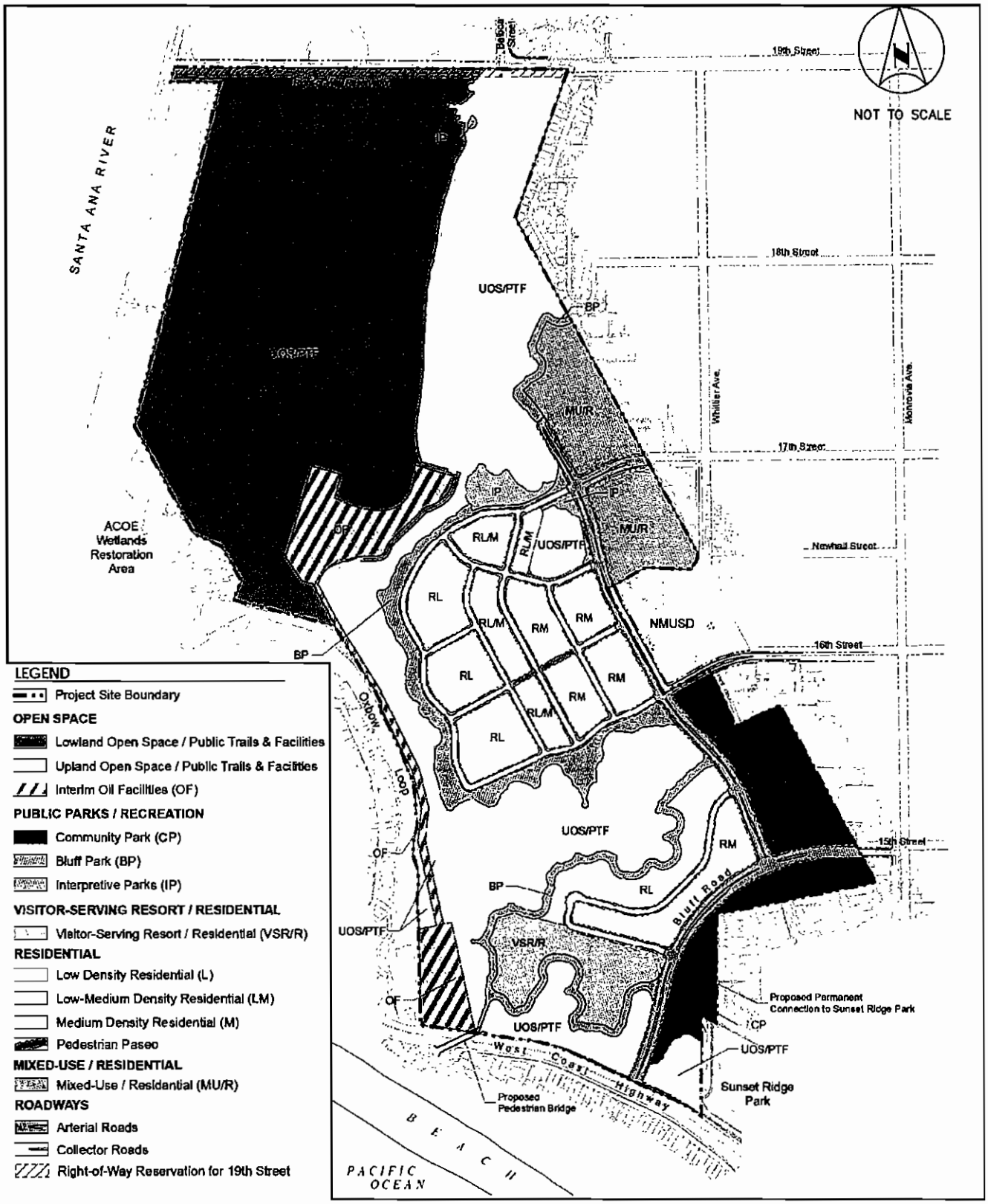

FIGURE 3
NEWPORT BANNING RANCH
BLUFF ROAD ALTERNATIVE SITE PLAN

Kimley-Horn and Associates, Inc.

FILENAME: Jun 30, 2011 - 3:23pm K:\ORA_TPTO\ZSAC\Projects\Banning Ranch\CAD\6th Submittal.dwg

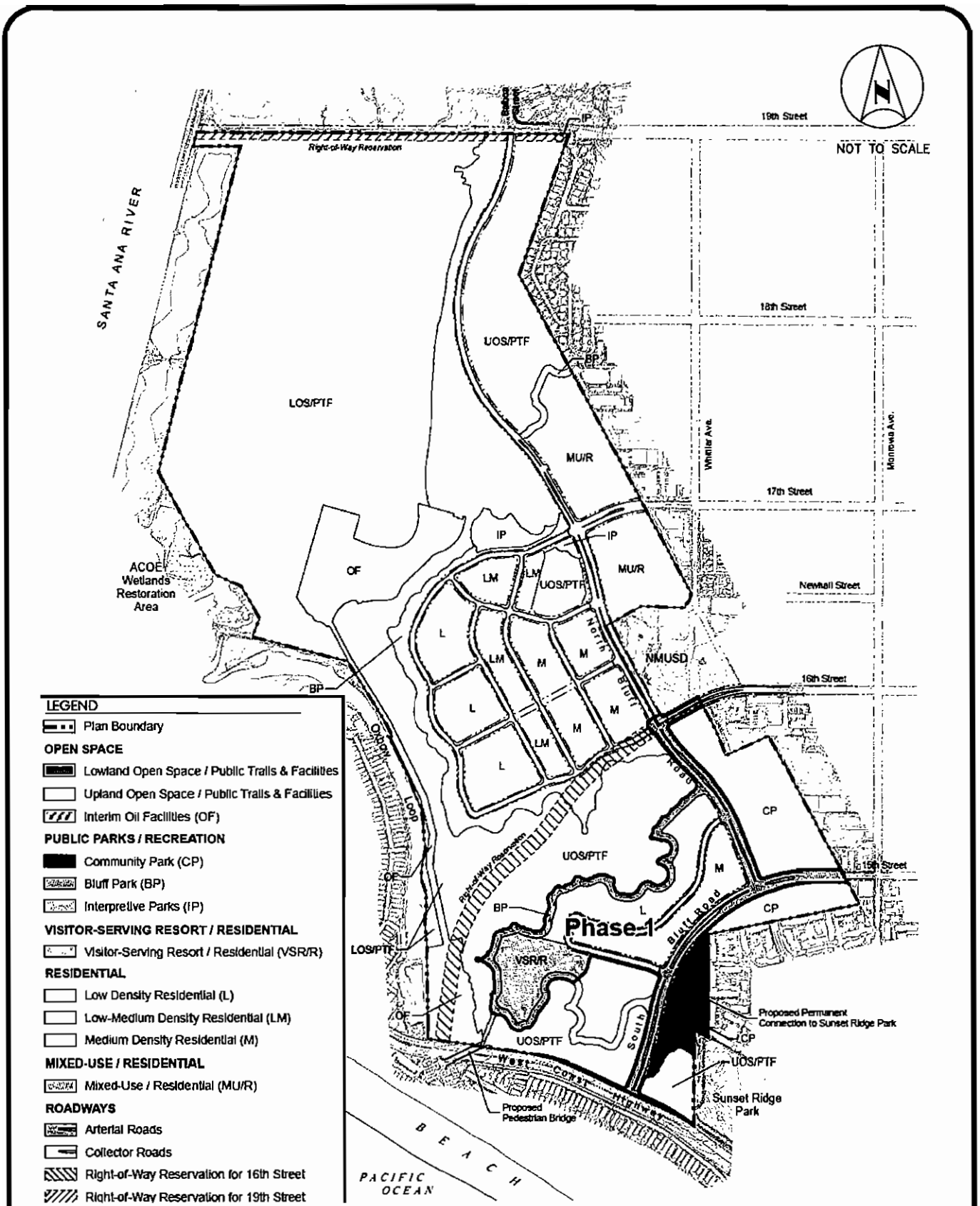

FIGURE 4
NEWPORT BANNING RANCH
PHASE 1 SITE PLAN

Kimley-Horn and Associates, Inc.

FILENAME: Jan 30, 2011 - 5:24pm K:\ORA_TPTO\25AC\Projects\Banning Ranch\CAD\6th Submittal.dwg

STUDY METHODOLOGY

Study Area

The traffic impact analysis for the Newport Banning Ranch project evaluates morning and evening peak hour operations at the following 52 existing intersections and six (6) future on-site intersections.

#	Intersection	City	Control
1	Monrovia Avenue/16th Street	Newport Beach	Stop Controlled
2	Placentia Avenue/15th Street	Newport Beach	Signalized
3	Superior Avenue/15th Street	Newport Beach	Stop Controlled
4	Superior Avenue/Placentia Avenue	Newport Beach	Signalized
5	Hospital Road/Newport Boulevard	Newport Beach	Signalized
6	Orange Street/West Coast Highway	Newport Beach	Signalized
7	Prospect Street/West Coast Highway	Newport Beach	Signalized
8	West Coast Highway/Superior Avenue	Newport Beach	Signalized
9	Newport Boulevard/West Coast Highway	Newport Beach	Signalized
10	Riverside Avenue/West Coast Highway	Newport Beach	Signalized
11	Tustin Avenue/West Coast Highway	Newport Beach	Signalized
12	Dover Drive/West Coast Highway	Newport Beach	Signalized
13	Magnolia Street/Hamilton Avenue	Huntington Beach	Signalized
14	Bushard Street/Hamilton Avenue	Huntington Beach	Signalized
15	Brookhurst Street/Hamilton Ave (Victoria St)	Huntington Beach	Signalized
16	Magnolia Street/Banning Avenue	Huntington Beach	Signalized
17	Bushard Street/Banning Avenue	Huntington Beach	Stop Controlled
18	Brookhurst Street/Banning Avenue	Huntington Beach	Signalized
19	Magnolia Street/Pacific Coast Highway	Huntington Beach	Signalized
20	Brookhurst Street/Bushard Street	Huntington Beach	Signalized
21	Brookhurst Street/Pacific Coast Highway	Huntington Beach	Signalized
22	Placentia Avenue/Victoria Street	Costa Mesa	Signalized
23	Pomona Avenue/Victoria Street	Costa Mesa	Signalized
24	Harbor Boulevard/Victoria Street	Costa Mesa	Signalized
25	Newport Boulevard/Victoria Street	Costa Mesa	Signalized
26	Newport Boulevard/Victoria (22nd Street)	Costa Mesa	Signalized
27	Whittier Avenue/19th Street	Costa Mesa	Stop Controlled
28	Monrovia Avenue/19th Street	Costa Mesa	Stop Controlled
29	Placentia Avenue/19th Street	Costa Mesa	Signalized
30	Pomona Avenue/19th Street	Costa Mesa	Signalized
31	Anaheim Avenue/19th Street	Costa Mesa	Signalized
32	Park Avenue/19th Street	Costa Mesa	Signalized
33	Harbor Boulevard/19th Street	Costa Mesa	Signalized

#	Intersection	City	Control
34	Newport Boulevard/19th Street	Costa Mesa	Signalized
35	Newport Boulevard/Broadway	Costa Mesa	Signalized
36	Newport Boulevard/Harbor Boulevard	Costa Mesa	Signalized
37	Newport Boulevard/18th Street (Rochester)	Costa Mesa	Signalized
38	Placentia Avenue/18th Street	Costa Mesa	Signalized
39	Whittier Avenue/17th Street	Costa Mesa	Stop Controlled
40	Monrovia Avenue/17th Street	Costa Mesa	Stop Controlled
41	Placentia Avenue/17th Street	Costa Mesa	Signalized
42	Pomona Avenue/17th Street	Costa Mesa	Stop Controlled
43	Superior Avenue/17th Street	Costa Mesa	Signalized
44	Newport Boulevard/17th Street	Costa Mesa	Signalized
45	Orange Avenue/17th Street	Costa Mesa	Signalized
46	Santa Ana Avenue/17th Street	Costa Mesa	Signalized
47	Tustin Avenue/17th Street	Costa Mesa	Signalized
48	Irvine Avenue/17th Street	Costa Mesa	Signalized
49	Placentia Avenue/16th Street	Costa Mesa	Signalized
50	Superior Avenue/16th Street	Costa Mesa	Signalized
51	Newport Boulevard/16th Street	Costa Mesa	Signalized
52	Bluff Road/Victoria Street (future intersection)	Costa Mesa	Signalized
53	Bluff Road/19th Street (future intersection)	Newport Beach	Signalized
54	Bluff Road/17th Street (future intersection)	Newport Beach	Signalized
55	Bluff Road/16th Street (future intersection)	Newport Beach	Stop Controlled
56	Bluff Road/15th Street (future intersection)	Newport Beach	Signalized
57	Bluff Road/W Coast Hwy (future intersection)	Newport Beach	Signalized
58	Monrovia Avenue / 15th Street	Newport Beach	Stop Controlled

Note: The intersection of Monrovia Avenue and 15th Street was added as a study intersection after the intersection numbering had been established and tables and figures had been set up. As a result, the intersection of Monrovia and 15th was added as the last intersection on the list.

The location of the study intersections is shown on Figure 5. Nine of the study intersections are located in the City of Huntington Beach, 13 existing and 6 future intersections are in Newport Beach, and 36 are located in the City of Costa Mesa. The study intersection list reflects input received from the cities of Newport Beach, Huntington Beach, and Costa Mesa. Each intersection has been analyzed using the methodology and parameters of the city in which the intersection is located. A discussion of the analysis methodology and significance criteria for each city is provided in the next section.

Of the 58 study intersections, 20 intersections are on State Highways, and are controlled by Caltrans. A separate analysis of the State Highway intersections using the analysis methodology required by Caltrans for State facilities, per the Caltrans Guide for the Preparation of Traffic Impact Studies, is provided in a separate section of this report.

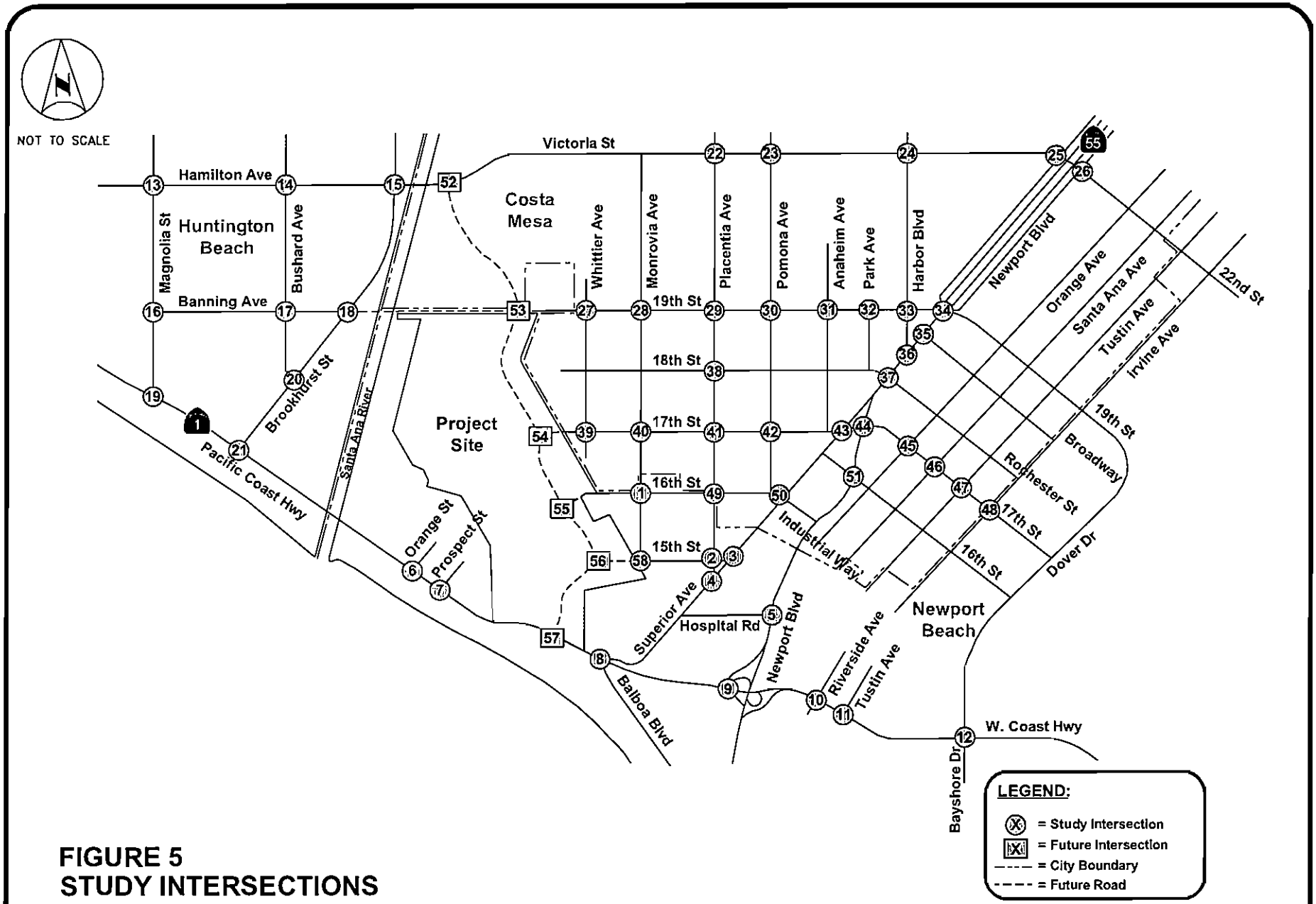

FIGURE 5
STUDY INTERSECTIONS

FILENAME: Jun 30, 2011 - 5:25pm K:\ORA_TPTD\ZSAC\Projects\Banning Ranch\CAD\8th Submittal.dwg

Kimley-Horn and Associates, Inc.

Analysis Methodology

Per long-standing city policy, as stated in the Circulation Element of the City's General Plan, intersection analysis is intended to assess traffic conditions during a typical non-summer day. Intersection analysis for all signalized intersections has been conducted using the Intersection Capacity Utilization (ICU) methodology, which is the methodology utilized by all three cities, as well as the Orange County Congestion Management Program (CMP). (Intersections that are located on a State Highway are also analyzed in accordance with Caltrans requirements, using a separate methodology, as discussed later in this report.)

The ICU provides a comparison of the theoretical hourly vehicular capacity of an intersection to the number of vehicles actually passing through that intersection during any given hour. The ICU calculation assumes an hourly per-lane capacity for each lane through the intersection, and a clearance factor to account for the effect of yellow and red signal phases.

Variations in analysis input parameters between the agencies have been accounted for in the analysis. The following presents the ICU parameters for each of the cities.

ICU Parameter	Newport Beach	Huntington Beach	Costa Mesa
Hourly Lane Capacity	1,600 vph	1,700 vph	1,600 vph
Clearance Interval	NA	5%	NA

Note: vph = vehicles per hour

Intersection analysis for unsignalized intersections has been conducted using the Highway Capacity Manual (HCM) methodology, which returns a delay value, expressed in terms of the average seconds of delay per vehicle. Nine of the existing study intersections are currently unsignalized: three in the City of Newport Beach; one in the City of Huntington Beach; and five in the City of Costa Mesa.

Operating conditions for both ICU and HCM methodologies are expressed in terms of "Level of Service" which is also referred to by its acronym, LOS. The ICU calculation returns a volume-to-capacity (V/C) ratio that translates into a corresponding Level of Service, ranging from LOS A, representing uncongested, free-flowing conditions, to LOS F, representing congested, over-capacity conditions. The HCM methodology returns a delay value, expressed in terms of the average seconds of delay per vehicle, which also corresponds to a level of service measure. A summary description of each level of service and the corresponding V/C ratio and delay is provided on the chart on the following page.

Performance Criteria

The City of Newport Beach target Level of Service (LOS) for peak hour operation of signalized intersections is LOS D or better. In the City of Huntington Beach and the City of Costa Mesa, the target Level of Service is LOS D, as well.

LEVEL OF SERVICE DESCRIPTIONS			
Level of Service	Signalized: ICU	Unsignalized: HCM [1]	Description
	V/C Ratio	Delay (sec)	
A	0.00 - 0.60	≤10	EXCELLENT – No vehicle waits longer than one red light and no approach phase is fully used.
B	0.61 - 0.70	> 10 and ≤ 15	VERY GOOD – An occasional approach phase is fully utilized; drivers begin to feel somewhat restricted within groups of vehicles.
C	0.71 - 0.80	> 15 and ≤ 25	GOOD – Occasionally drivers may have to wait through more than one red light; back-ups may develop behind turning vehicles
D	0.81 - 0.90	> 25 and ≤ 35	FAIR – Delays may be substantial during portions of the rush hours, but enough lower volume periods occur to permit clearing of developing lines, preventing excessive back-ups.
E	0.91 - 1.00	> 35 and ≤ 50	POOR – Represents the most vehicles that the intersection approaches can accommodate; may be long lines of waiting vehicles through several signal cycles.
F	> 1.00	> 50	FAILURE – Back-ups from nearby locations or on cross streets may restrict or prevent movement of vehicles out of the intersection approaches. Tremendous delays with continuously increasing queue lengths.
[1] Source: Highway Capacity Manual, 2000			

Threshold of Significance

To determine whether or not the addition of project-generated trips at a signalized study intersection results in a significant impact, the following threshold of significance would apply:

- A significant impact would occur when the addition of project-generated trips causes the Level of Service at a study intersection to deteriorate from an acceptable LOS (LOS D or better) to a deficient LOS (LOS E or F).

- A significant impact would occur when the addition of project-generated trips increases the ICU at a study intersection by one percent or more (v/c increases by 0.010 or more), worsening a projected baseline condition of LOS E or F.

For unsignalized intersections, a signal warrant analysis will be conducted to determine if a signal is warranted for intersections operating at LOS D or worse in the City of Costa Mesa, and LOS E or worse in the City of Newport Beach and City of Huntington Beach. Signal warrant analysis will be conducted according to the California Manual of Uniform Traffic Control Devices (MUTCD), Warrant 3 – Peak Hour warrant parameters, using the peak hour intersection volumes.

Study Scenarios

Each of the study intersections has been analyzed for the following scenarios:

- Existing Conditions
- Existing Plus Project Conditions
- Year 2016 without Project – TPO Analysis
- Year 2016 with Proposed Project – TPO Analysis
- Year 2016 with Project Bluff Road Alternative – TPO Analysis
- Year 2016 with Phase 1 Project – TPO Analysis
- Year 2016 Cumulative Conditions without Project
- Year 2016 Cumulative Conditions with Proposed Project
- Year 2016 Cumulative Conditions with Project Bluff Road Alternative
- Year 2016 Cumulative Conditions with Phase 1 Project
- General Plan Build-out – No Development
- General Plan Build-out with Proposed Project
- General Plan Build-out with Project – Bluff Road Alternative
- General Plan Build-out with Project and Full MPAH Network
- General Plan Build-out – Open Space Alternative with Bluff Road
- General Plan Build-out – Open Space Alternative without Bluff Road

EXISTING TRANSPORTATION SYSTEM

Roadway Characteristics

Regional access to the site is provided by State Route 55 (SR-55), which is the Costa Mesa Freeway north of 19th Street in Costa Mesa, and Newport Boulevard south of 19th Street; and by West Coast Highway (SR-1), located directly south of the project area. The proposed Newport Banning Ranch development would take access to the existing street system via the proposed Bluff Road at West Coast Highway, with connections to 15th Street, 16th Street, 17th Street, and 19th Street.

The following provides a description of key roadways providing local access to the project vicinity.

Pacific Coast Highway / West Coast Highway (SR-1) is a state highway providing regional access to and through the project area. State Route 1 extends for many miles beyond the project site through several cities in Orange County. West of the Santa Ana River, it is known as Pacific Coast Highway (PCH). From the Santa Ana River to Dover Drive it is known as West Coast Highway. The configuration of State Route 1 varies throughout the study area. From Magnolia Avenue (in Huntington Beach) to the Santa Ana River, Pacific Coast Highway is a six-lane divided roadway with a posted speed limit of 45 miles per hour (mph). From the Santa Ana River to Superior Avenue, West Coast Highway is a six-lane divided roadway with a posted speed limit of 45 mph. Between Superior Avenue and the Newport Boulevard (SR-55) southbound off-ramp intersection, West Coast Highway is

a seven-lane divided highway, with four westbound lanes and three eastbound lanes; and a posted speed limit of 45 mph. Between the Newport Boulevard (SR-55) southbound off-ramp intersection and Tustin Avenue, West Coast Highway is a five-lane divided highway, with three westbound lanes and two eastbound lanes; and a posted speed limit of 45 mph. Between Tustin Avenue and Dover, West Coast Highway is a four-lane divided highway, with two westbound lanes and two eastbound lanes; and a posted speed limit of 45 mph. Through this section, on-street metered parking is provided.

Costa Mesa Freeway (SR-55) is a six- to seven-lane freeway providing regional access to and through the project area. The Costa Mesa Freeway extends for several miles to the north through several cities in Orange County, terminating at the Riverside Freeway (SR-91). To the south, the Costa Mesa Freeway ends at 19th Street in Costa Mesa, and continues as Newport Boulevard south of 19th Street.

Newport Boulevard (SR-55) is a state highway that extends from the terminus of the Costa Mesa Freeway at 19th Street south into the City of Newport Beach. Between 19th and 17th Streets in the City of Costa Mesa, Newport Boulevard has recently been improved to provide four northbound and three southbound travel lanes. South of 17th, Newport Boulevard is six-lane divided arterial with a posted speed limit of 40 mph. Newport Boulevard is grade separated at West Coast Highway, and continues onto the Balboa Peninsula as a four-lane divided arterial. Newport Boulevard is classified as a Major Road (six-lane divided) on the City of Costa Mesa and City of Newport Beach Circulation Elements, as well as on the County's MPAH.

Superior Avenue is a four-lane divided north-south Primary Arterial in the vicinity of Coast Highway. Superior Avenue extends north from West Coast Highway in the City of Newport Beach through the project area, terminating at Newport Boulevard in the City of Costa Mesa. Within the project area, Superior Avenue provides two travel lanes in each direction with a raised or painted median and a posted speed limit of 40 mph. Superior Avenue is classified as a Primary Road (four-lane divided) on the City of Newport Beach and Costa Mesa Circulation Elements.

Victoria Street is a four-lane east-west roadway and is classified as a Secondary Arterial (four-lane undivided) on the City of Costa Mesa's Circulation Element. The roadway is divided by a raised landscaped median between Canyon Drive and Placentia Avenue, while the rest of the roadway is divided by a continuous two-way-left-turn lane. The posted speed limit on Victoria Street is 40 mph. East of the SR-55, the roadway changes name to 22nd Street. Victoria Street continues over the Santa Ana River into the City of Huntington Beach, where it is called Hamilton Avenue.

Hamilton Avenue is a four-lane divided east-west arterial. The roadway is divided by a painted median. Class II bike lanes are provided on both sides of the street along the entire length of Hamilton Avenue. The posted speed limit is 45 mph. Hamilton Avenue terminates at Newland Street on the west. To the east, Hamilton Avenue crosses over the Santa Ana River, into the City of Costa Mesa where it becomes Victoria Street in the City of Costa Mesa. Hamilton Avenue is classified as a Primary Arterial (four-lane divided) on the City of Huntington Beach Circulation Element.

19th Street currently provides one travel lane in each direction with a center two-way-left-turn lane west of Placentia Avenue, currently terminating at Balboa Boulevard in the City of Costa Mesa. Between Placentia Avenue and Anaheim Avenue, 19th Street is a four-lane divided roadway. Between Anaheim Avenue and Newport Boulevard, 19th Street provides three through lanes in each direction with a raised landscaped median. East of Newport Boulevard, 19th Street tapers to a two-lane undivided roadway with on-street parking. 19th Street is classified as a Primary Arterial (four-lane divided) west of Newport Boulevard, and a Collector (two-lane undivided) east of Newport Boulevard on the City of Costa Mesa Circulation Element. The County's Master Plan of Arterial Highways (MPAH) shows 19th Street extended westward from its current terminus as a Primary Arterial over the Santa Ana River to connect with Banning Avenue in the City of Huntington Beach.

Banning Avenue is an east-west roadway between Magnolia Avenue and Brookhurst Street. Banning Avenue provides one travel lane in each direction with on-street bike lanes, and is classified as a Secondary Arterial (four-lane undivided) on the City of Huntington Beach Circulation Element. The roadway is divided by a painted median in some segments and the posted speed limit is 35 mph.

17th Street is a four-lane east-west arterial in the City of Costa Mesa. 17th Street extends east from its current terminus at the project boundary to Irvine Avenue, where it becomes Westcliff Drive. 17th Street provides one travel lane in each direction between the project site and Superior Avenue, with a painted median between Placentia Avenue and Superior Avenue and a posted speed limit of 35 mph. Between Superior Avenue and Irvine Avenue, 17th Street provides two travel lanes in each direction with a raised or painted median and a posted speed limit of 35 mph. 17th Street is classified as a Secondary (four-lane undivided) between Bluff Road and Placentia Avenue, a Primary (four-lane divided) between Placentia Avenue and Newport Boulevard, and a Major (six-lane divided) east of Newport Boulevard on the City of Costa Mesa Circulation Element.

16th Street is a two-lane undivided east-west roadway in the vicinity of the project. 16th Street extends east from the project boundary to its terminus at Superior Avenue where it becomes Industrial Way. 16th Street provides one travel lane in each direction between the project site and Superior Avenue and has a posted speed limit of 35 mph. 16th Street is classified as a Collector (two-lane undivided) on the City of Costa Mesa Circulation Element.

15th Street is a two-lane undivided east-west roadway in the vicinity of the project. 15th Street extends east from Monrovia Avenue to its terminus at Superior Avenue. 15th Street provides one travel lane in each direction and has a posted speed limit of 35 mph. 15th Street is classified as a Primary Road between Bluff Road and Monrovia, and a Secondary Road between Monrovia and Superior Avenue on the City of Newport Beach Circulation Element.

Brookhurst Street is a Major Arterial running north-south from Pacific Coast Highway through the City of Huntington Beach and cities to the north. In the project vicinity, Brookhurst Street is a six-lane divided roadway with a speed limit of 45 mph. Brookhurst Street is classified as a Major Arterial (six-lane divided) on the City of Huntington Beach Circulation Element.

Bluff Road is shown as a future north-south arterial connection between West Coast Highway and 19th Street on both the City of Newport Beach Circulation Element and the County of Orange Master Plan of Arterial Highways. (The roadway shown on the City's Circulation Element is not labeled; the roadway shown on the MPAH is labeled "Balboa".) Bluff Road is proposed as the primary circulation feature through the Newport Banning Ranch site, with connections to 15th Street, 16th Street, 17th Street, and 19th Street. One project alternative evaluated in this study assumes the Newport Banning Ranch development with Bluff Road constructed only between West Coast Highway and the project development limits, just north of 17th Street, with no connection to 19th Street.

Monrovia Avenue is an undivided two-lane north-south local roadway. It starts in the north at Victoria Street in the City of Costa Mesa, extends south through the residential neighborhoods, continues past 18th Street into the commercial / industrial zones, and ends just past 15th Street in the City of Newport Beach. On-street parking is allowed with time and day restrictions and the posted speed limit is 35 mph. Monrovia Avenue is shown on the City of Costa Mesa Circulation Element as a Collector (two-lane undivided) roadway.

Placentia Avenue is a four-lane divided north-south arterial in the vicinity of the project. Placentia Avenue extends north from Hospital Road in the City of Newport Beach to its terminus at Adams Avenue in the City of Costa Mesa. In the vicinity of the project, Placentia Avenue provides two travel lanes in each direction with a painted median and a posted speed limit of 40 mph. Placentia Avenue is classified as a Secondary Road (four-lane undivided) on the City of Newport Beach Circulation Element and a Primary (four-lane divided) roadway on the City of Costa Mesa Circulation Element.

Pomona Avenue is an undivided two-lane local roadway in the City of Costa Mesa, stretching from just north of Victoria Street to 16th Street. The posted speed limit on Pomona Avenue is 30 mph. Pomona Avenue is shown on the City of Costa Mesa Circulation Element as a Collector (two-lane undivided) roadway.

Harbor Boulevard is classified as a Major Arterial (six-lane divided) on the City of Costa Mesa Circulation Element. It is one of the main north-south corridors through Orange County. In the project vicinity, Harbor Boulevard provides three travel lanes in each direction with a center two-way-left-turn lane and is lined with a variety of retail and commercial uses on both sides. On-street parking is generally not allowed, and the posted speed limit is 40 mph.

Public Transportation Service

The Orange County Transportation Authority (OCTA) provides local and regional bus service throughout Orange County, including the Cities of Newport Beach, Costa Mesa, and Huntington Beach. Figure 6 illustrates the bus routes operated by OCTA within the study area. These include OCTA Routes 1, 33, 35, 43, 47/47A, 55, 57, 71 and 173. The following provides a description of the route and service provided by each OCTA route at the time this report was prepared.

OCTA Route 1 operates between the City of Long Beach and the City of San Clemente via State Route 1. Route 1 starts in San Clemente at El Camino Real and Avenida Santa Margarita and continues north through the cities of Dana Point, Laguna Beach, Newport Beach, Huntington Beach, Seal Beach and Long Beach; where it eventually turns around at 7th Street and Channel. Route 1 operates seven days a week, from approximately 4:30 AM to 11:05 PM on weekdays, 5:25 AM to 9:35 PM on Saturdays, and 5:20 AM to 9:25 PM on Sundays with 30-minute to one-hour headways (a headway is the time interval between bus arrivals for each route) throughout the day.

OCTA Route 33 operates in a north-south direction between the City of Fullerton and the City of Huntington Beach via Magnolia Avenue. Route 33 starts at the Fullerton Park-N-Ride lot at Magnolia Avenue and Orangethorpe Avenue in Fullerton, and continues south through the cities of Fullerton, Stanton, Anaheim, Garden Grove, Westminster, Fountain Valley, and Huntington Beach; where it turns around at Pacific Coast Highway. Route 33 operates seven days a week, from approximately 4:50 AM to 9:00 PM on weekdays, 7:30 AM to 7:20 PM on Saturdays, and 8:30 AM to 7:20 PM on Sundays and holidays with 25-minute to one-hour headways throughout the day.

OCTA Route 35 operates in a north-south direction between the City of Fullerton and the City of Huntington Beach via Brookhurst Street. Route 35 starts at the Fullerton Park-N-Ride lot at Magnolia Avenue and Orangethorpe Avenue in Fullerton and continues north to Commonwealth Avenue, where it turns east, then south on Brookhurst Street through the cities of Fullerton, Anaheim, Garden Grove, Westminster, Fountain Valley, and Huntington Beach; where it eventually turns around at Pacific Coast Highway. Route 35 operates seven days a week, from approximately 4:35 AM to 10:00 PM on weekdays, 5:00 AM to 7:45 PM on Saturdays, and 5:00 AM to 7:40 PM on Sundays and holidays with 15-minute to one-hour headways throughout the day.

OCTA Route 43 operates in a north-south direction between the City of Fullerton and the City of Costa Mesa via Harbor Boulevard. Route 43 starts near Fullerton College and continues through the cities of Fullerton, Anaheim, Garden Grove, Santa Ana, Fountain Valley, and Costa Mesa; where it turns around at Triangle Square. Route 43 operates seven days a week, from approximately 4:00 AM to 1:30 AM with 15-minute to one-hour headways throughout the day.

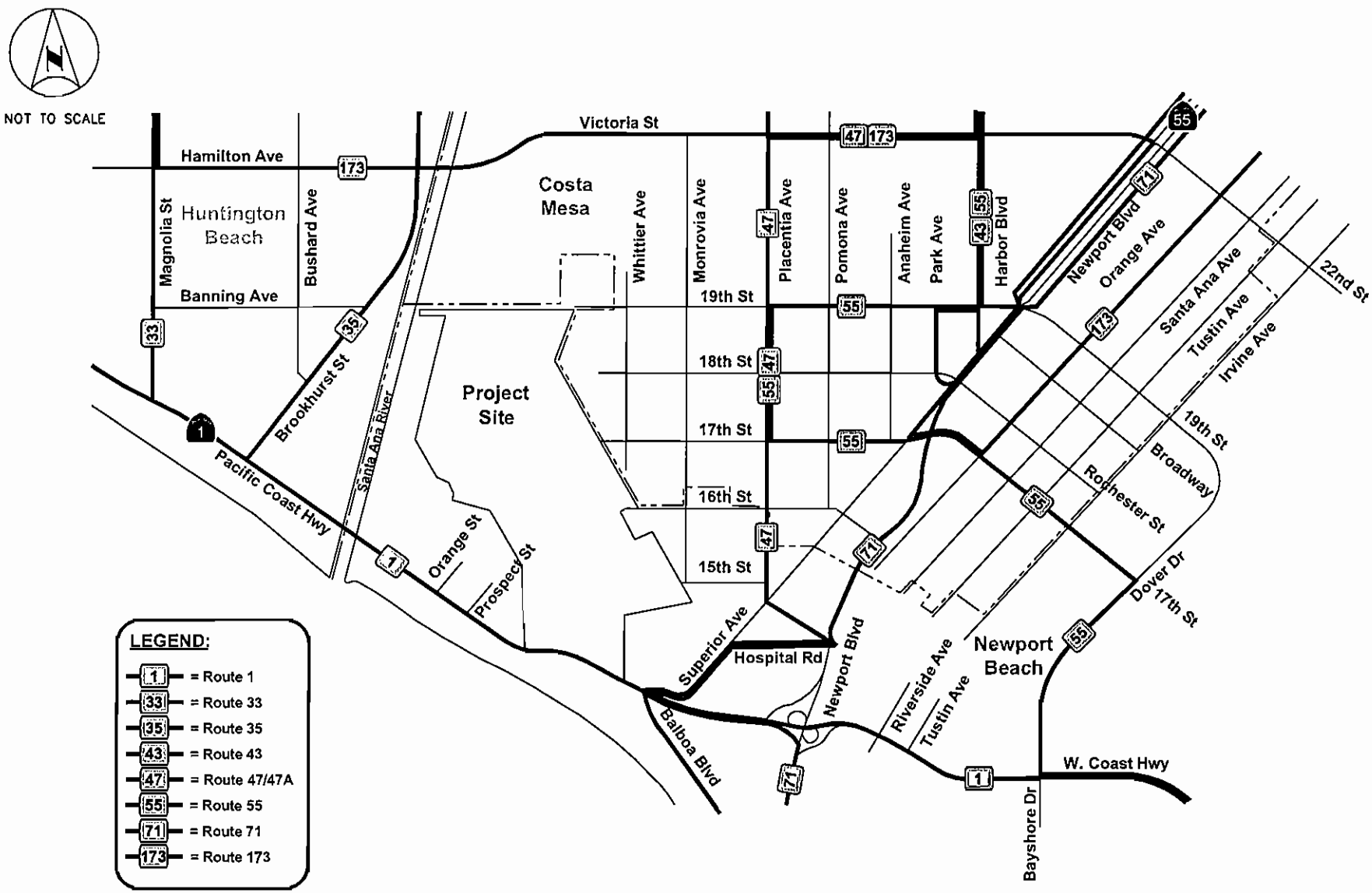

FIGURE 6
EXISTING TRANSIT SERVICE

FILENAME: Jun 30, 2011 - 5:25pm K:\ORA_TPTO\ESAC\Projects\Banning Ranch\CAD\6th Submittal.dwg

Kimley-Horn and Associates, Inc.

OCTA Route 47/47A operates in a north-south direction between the City of Fullerton and the City of Newport Beach via Anaheim Boulevard, Fairview Street, and Placentia. Route 47/47A starts at the Fullerton Transportation Center, heads south to Anaheim Boulevard, then continues on Anaheim Boulevard and heads east on Chapman Avenue to The Block at Orange where it continues south to Fairview Street, through the cities of Santa Ana, Costa Mesa, and Newport Beach; where it eventually turns around at 23rd Street and Balboa Boulevard. Route 47/47A operates seven days a week, from approximately 4:00 AM to 11:20 PM on weekdays, 5:00 AM to 11:00 PM on Saturdays, and 5:00 AM to 11:00 PM on Sundays and holidays with 10-minute to one-hour headways throughout the day.

OCTA Route 55 operates in a north-south direction between the Cities of Santa Ana and Newport Beach via Standard Avenue, Bristol Street, Fairview Street, and 17th Street. Route 55 starts at the intersection of W. 6th Street and N. Flower Street in Santa Ana and heads south along Standard Avenue, Bristol Street, and other streets before it heads southeast along 17th Street and West Coast Highway through the city of Newport Beach; where it eventually turns around at the Newport Transportation Center/ Park-N-Ride in Newport Center. Route 55 operates seven days a week, from approximately 4:20 AM to 11:40 PM on weekdays, 5:00 AM to 11:00 PM on Saturdays, and 5:00 AM to 10:00 PM on Sundays and holidays with 10- to 15-minute headways throughout the day.

OCTA Route 71 operates in generally a north-south direction between the City of Yorba Linda and the Balboa area of Newport Beach via Tustin Avenue, Red Hill Avenue and Newport Boulevard. Route 71 starts near the Placentia Linda Hospital in Yorba Linda and heads south on Rose Drive, which turns into Tustin Avenue, and then heads south on State College Boulevard towards The Block at Orange where it then turns onto Bristol Street and continues south through the cities of Santa Ana, Costa Mesa, and Newport Beach; where it eventually turns around at the Newport Transportation Center/ Park-N-Ride. Route 71 operates seven days a week, from 4:50 AM to 11:25 PM on weekdays, 6:15 AM to 9:20 PM on Saturday, and 6:05 AM to 9:00 PM on Sundays and holidays with 45-minute to one-hour headways throughout the day.

OCTA Route 173 is a community transit service operated between the City of Huntington Beach and the City of Costa Mesa. Route 173 starts at the South Coast Plaza Area in Costa Mesa, works its way past the Orange County Fairgrounds via Fair Drive, and continues through Costa Mesa via Orange Avenue and Newport Boulevard to access Victoria Street. Route 173 then heads westbound on Victoria Street into Huntington Beach where Victoria Street becomes Hamilton Avenue. It continues through Huntington Beach and turns around at PCH and 1st Street. Route 173 operates Monday through Friday from 5:30 AM to 8:15 PM on mid-size or small buses with 45-minute headways throughout the day. No weekend service is provided.

EXISTING TRAFFIC CONDITIONS

Existing Intersection Improvements

Field observations of all study intersections were conducted. Existing lane configurations and intersection controls at the study intersections are shown on **Figure 7**. At the time this study was undertaken, the City of Costa Mesa had recently finished construction on Newport Boulevard between 17th Street and 19th Street to provide additional through and turning lanes. The new lane configurations for these intersections are included in the Existing Conditions analysis and are shown on Figure 6. Also shown on Figure 6 are the proposed lane configuration and control for the future on-site intersections along Bluff Road that would be constructed as part of the proposed development.

Existing Traffic Volumes

Existing peak hour turning movement counts were collected at the start of the study process for the majority of the study intersections. Newport Boulevard was under construction from 17th Street to 19th Street at the time the turning movement data was collected. The City of Costa Mesa staff provided turning movement counts from year 2007 for the five study intersections located on Newport Boulevard from 17th Street to 19th Street. Based on discussions with the City of Costa Mesa staff, a growth factor of one percent (1%) per year was applied to the 2007 data to represent 2009 turning movement volumes. Traffic volume data collection sheets are provided in ***Appendix A***.

Existing Intersection Analysis

Peak hour intersection analysis was conducted for the signalized study intersections using the applicable intersection analysis methodology parameters for each city, as discussed previously in this report. Unsignalized intersections were analyzed using the HCM methodology for unsignalized intersections.

Existing AM and PM peak hour intersection operations are summarized on **Table 1**. The following intersections currently operate below acceptable levels of service.

Costa Mesa Intersection (s):

- 26. Newport Boulevard at Victoria Street/22nd Street (AM: LOS E)
- 36. Newport Boulevard at Harbor Boulevard (PM: LOS E)
- 37. Newport Boulevard at 18th Street/Rochester Street (PM: LOS E)

The deficient study intersection locations are shown on **Figure 8**.

All other study intersections are currently operating at acceptable levels of service for both peak hours. Intersection Level of Service worksheets are provided in ***Appendix B***.

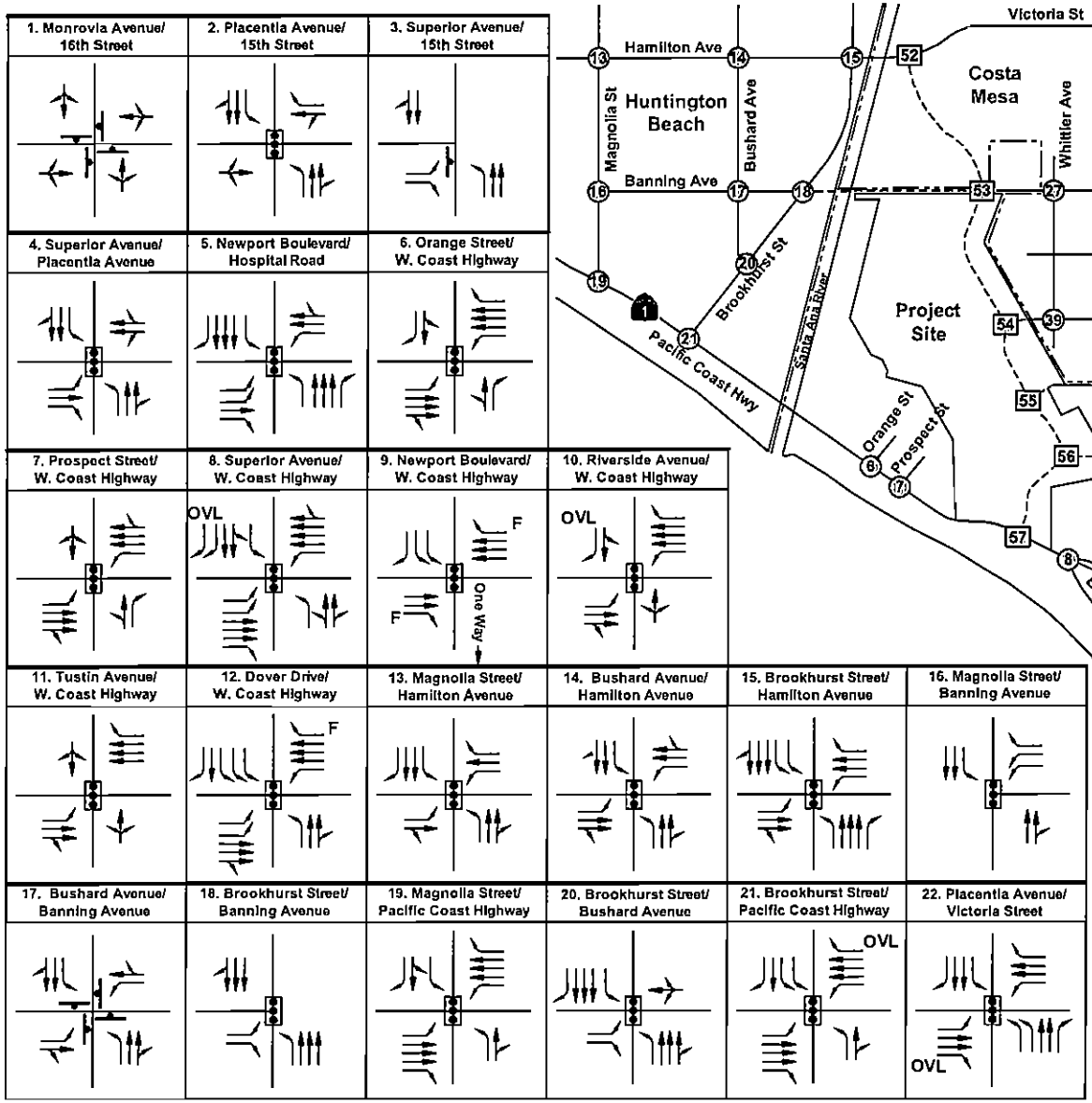

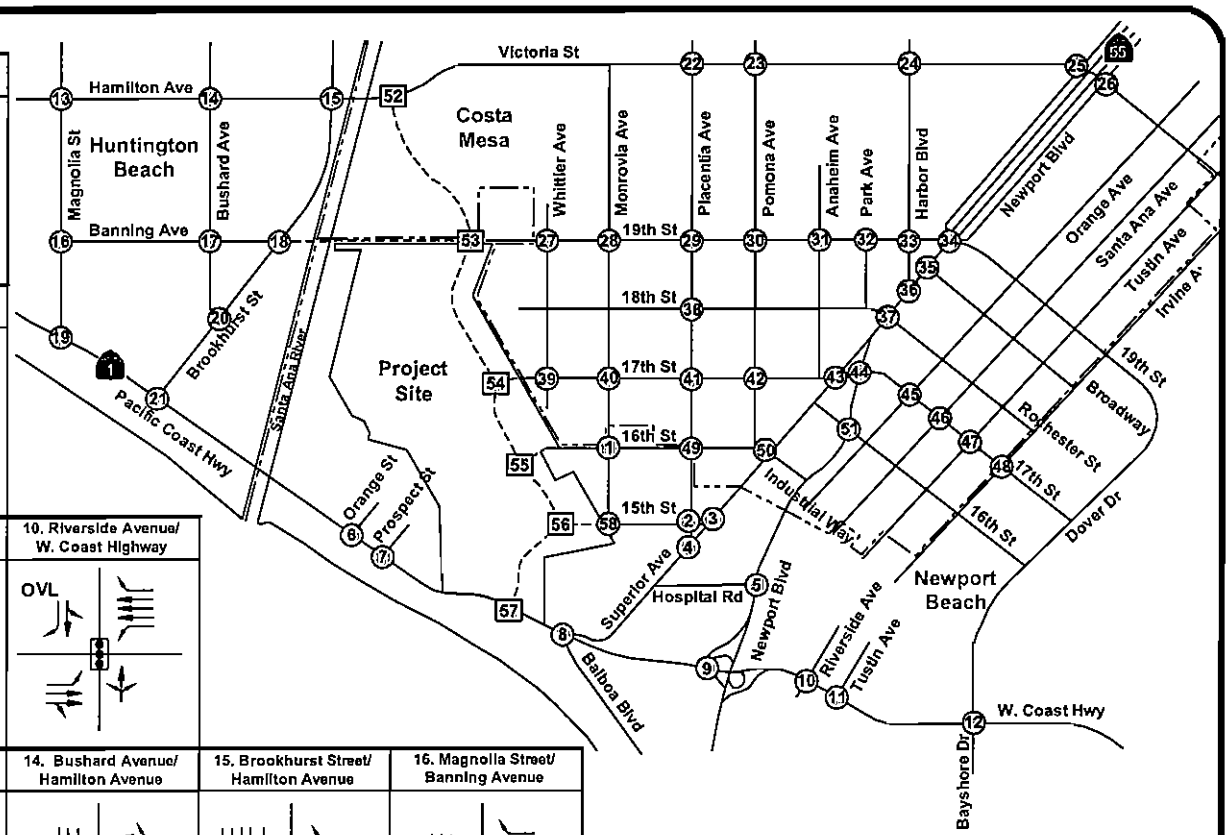

LEGEND:

- = Signal
- = Stop Sign
- = Study Intersection
- = Future Intersection
- F = Free Right-Turn Lane
- OVL = Right-Turn Overlap
- = City Boundary
- = Future Road

FIGURE 7
STUDY INTERSECTIONS LANE CONFIGURATION AND TRAFFIC CONTROL

Kimley-Horn and Associates, Inc.

FILENAME: Jun 30, 2011 – 5:26pm K:\ORA_TPTD\ZSAC\Projects\Banning Ranch\CAD\8th Submittal.dwg

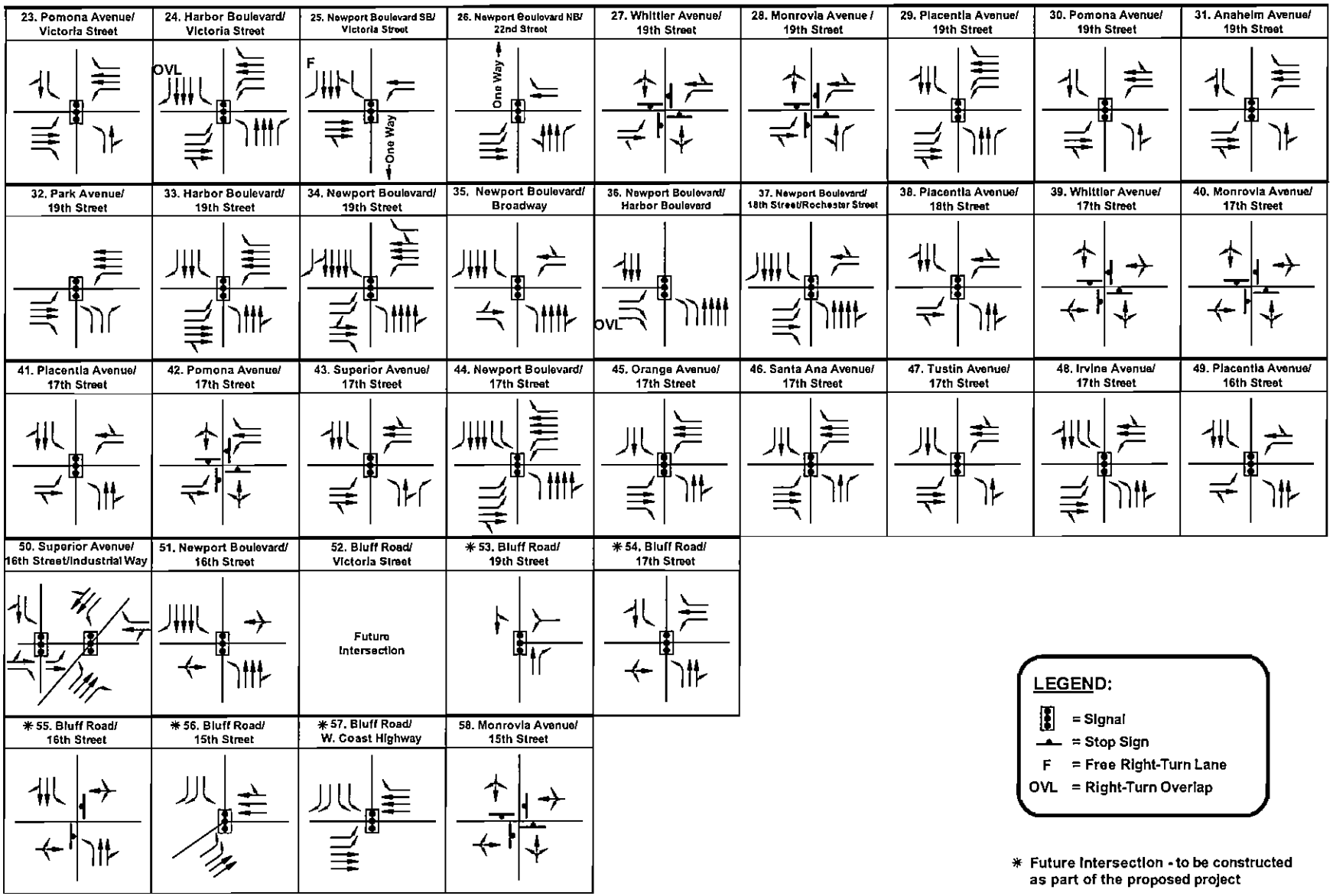

FIGURE 7
STUDY INTERSECTIONS LANE CONFIGURATION AND TRAFFIC CONTROL (CONT.)

Kimley-Horn and Associates, Inc.

FILENAME: Jun 30, 2011 - 5:27pm K:\ORA_TPTD\ZSAC\Projects\Banning Ranch\CAD\5th Submittal.dwg

TABLE 1
NEWPORT BANNING RANCH
SUMMARY OF INTERSECTION OPERATIONS
EXISTING CONDITIONS

		Intersection	Control	Without Project			
				AM Peak Hour		PM Peak Hour	
				ICU/ Delay	LOS	ICU/ Delay	LOS
Newport Beach	1	Monrovia Ave/16th St	U	8.8	A	8.2	A
	2	Placentia Ave/15th St	S	0.45	A	0.34	A
	3	Superior Ave/15th St	U	19.6	C	22.9	C
	4	Superior Ave/Placentia Ave	S	0.50	A	0.57	A
	5	Newport Blvd/Hospital Rd	S	0.49	A	0.58	A
	6	Orange St/W. Coast Hwy	S	0.73	C	0.66	B
	7	Prospect St/W. Coast Hwy	S	0.72	C	0.66	B
	8	Superior Ave/W. Coast Hwy	S	0.65	B	0.65	B
	9	Newport Blvd/W. Coast Hwy	S	0.83	D	0.64	B
	10	Riverside Ave/W. Coast Hwy	S	0.65	B	0.71	C
	11	Tustin Ave/W. Coast Hwy	S	0.65	B	0.58	A
	12	Dover Dr/W. Coast Hwy	S	0.63	B	0.71	C
Huntington Beach	13	Magnolia St/Hamilton Ave	S	0.53	A	0.54	A
	14	Bushard St/Hamilton Ave	S	0.42	A	0.53	A
	15	Brookhurst St/Hamilton Ave (Victoria St)	S	0.67	B	0.64	B
	16	Magnolia St/Banning Ave	S	0.23	A	0.27	A
	17	Bushard St/Banning Ave	U	9.9	A	9.0	A
	18	Brookhurst St/Banning Ave	S	0.25	A	0.24	A
	19	Magnolia St/Pacific Coast Hwy	S	0.48	A	0.58	A
	20	Brookhurst St/Bushard St	S	0.32	A	0.32	A
	21	Brookhurst St/Pacific Coast Hwy	S	0.56	A	0.65	B
Costa Mesa	22	Placentia Ave/Victoria St	S	0.74	C	0.79	C
	23	Pomona Ave/Victoria St	S	0.63	B	0.66	B
	24	Harbor Blvd/Victoria St	S	0.70	B	0.78	C
	25	Newport Blvd/Victoria St	S	0.55	A	0.45	A
	26	Newport Blvd/Victoria St (22nd St)	S	0.96	E	0.57	A
	27	Whittier Ave/19th St	U	9.9	A	9.0	A
	28	Monrovia Ave/19th St	U	16.9	C	13.0	B
	29	Placentia Ave/19th St	S	0.48	A	0.68	B
	30	Pomona Ave/19th St	S	0.47	A	0.57	A
	31	Anaheim Ave/19th St	S	0.47	A	0.55	A
	32	Park Ave/19th St	S	0.44	A	0.54	A
	33	Harbor Blvd/19th St	S	0.40	A	0.56	A
	34	Newport Blvd/19th St	S	0.80	C	0.77	C
	35	Newport Blvd/Broadway	S	0.58	A	0.72	C
	36	Newport Blvd/Harbor Blvd	S	0.70	B	0.97	E
	37	Newport Blvd/18th St (Rochester St)	S	0.73	C	0.97	E
	38	Placentia Ave/18th St	S	0.44	A	0.47	A
	39	Whittier Ave/17th St	U	7.4	A	7.3	A
	40	Monrovia Ave/17th St	U	9.5	A	8.8	A
	41	Placentia Ave/17th St	S	0.41	A	0.52	A
	42	Pomona Ave/17th St	U	13.4	B	13.9	B
	43	Superior Ave/17th St	S	0.65	B	0.75	C
	44	Newport Blvd/17th St	S	0.74	C	0.81	D
	45	Orange Ave/17th St	S	0.42	A	0.61	B
	46	Santa Ana Ave/17th St	S	0.39	A	0.60	A
	47	Tustin Ave/17th St	S	0.47	A	0.64	B
	48	Irvine Ave/17th St	S	0.49	A	0.63	B
	49	Placentia Ave/16th St	S	0.32	A	0.29	A
	50	Superior Ave/16th St	S	0.47	A	0.43	A
	51	Newport Blvd/16th St	S	0.49	A	0.54	A
	52	Bluff Rd/Victoria St	Future Intersection				

TABLE 1
NEWPORT BANNING RANCH
SUMMARY OF INTERSECTION OPERATIONS
EXISTING CONDITIONS

Intersection			Control	Without Project			
				AM Peak Hour		PM Peak Hour	
				ICU/ Delay	LOS	ICU/ Delay	LOS
On-Site	53	Bluff Rd/19th St	Future Intersections				
	54	Bluff Rd/17th St					
	55	Bluff Rd/16th St					
	56	Bluff Rd/15th St					
	57	Bluff Rd/W. Coast Hwy					
	58	Monrovia Ave/15th Street	U	7.5	A	7.4	A

Notes:
S = Signalized, U = Unsignalized
Bold and shaded values indicate intersections operating at LOS E or F.
Intersection operation is expressed in average seconds of delay per vehicle during the peak hour for unsignalized intersections using the HCM 2000 Methodology and is expressed in volume-to-capacity (v/c) for signalized intersections using the ICU Methodology.

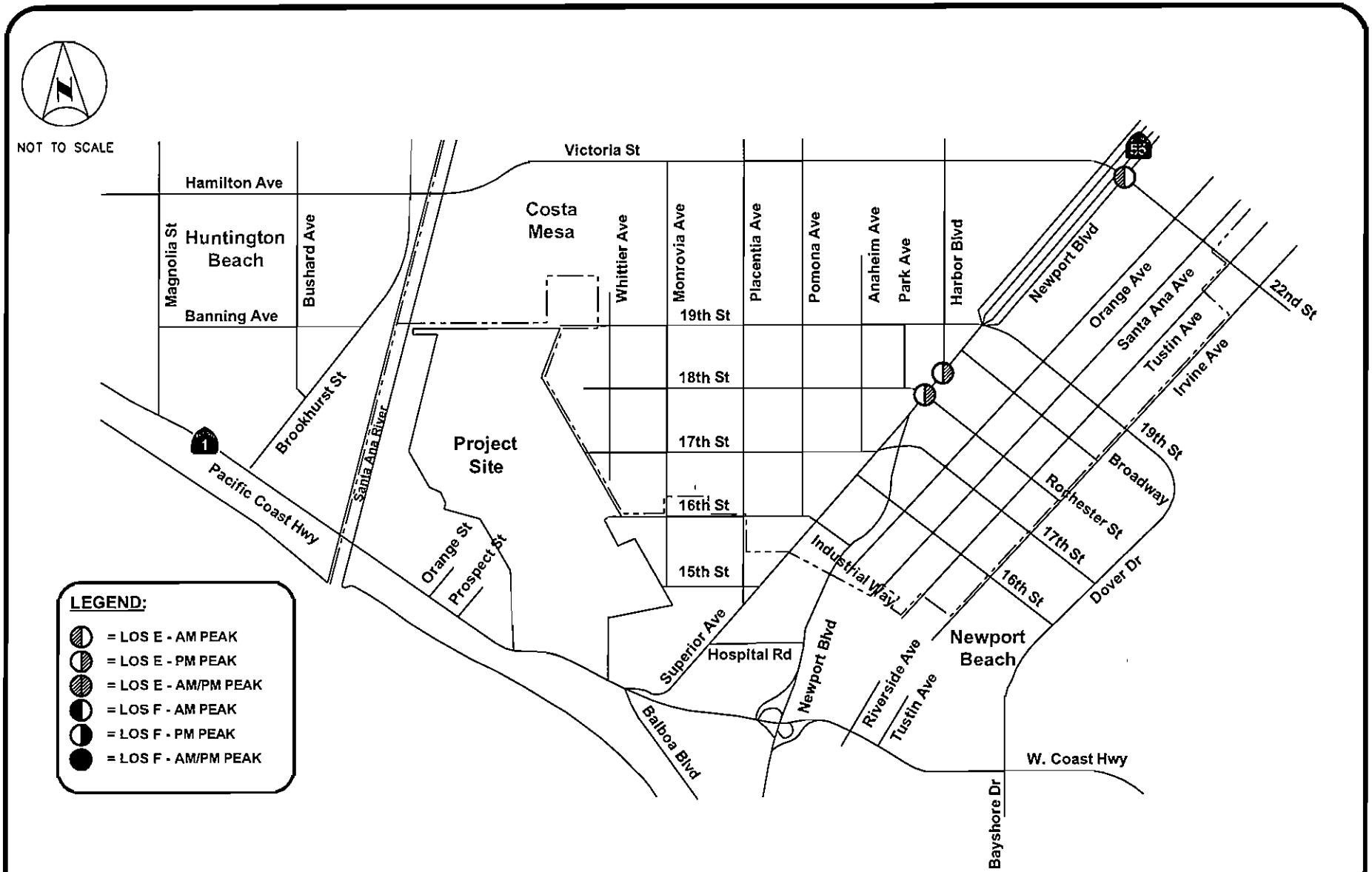

FIGURE 8
DEFICIENT INTERSECTIONS - EXISTING CONDITIONS

FILENAME: Jun 30, 2011 - 5:27pm K:\ORA_TPTO\ZSAC\Projects\Banning Ranch\CAD\8th Submittal.dwg

Kimley-Horn and Associates, Inc.

PROJECT TRAFFIC

Trip Generation

Proposed Project Trip Generation

The traffic expected to be generated by the proposed Newport Banning Ranch was calculated using the Institute of Transportation Engineers (ITE) publication Trip Generation, 8th Edition (2008). The project components are as follows:

- Residential condominiums and townhouses – 222 dwelling units
- Hi-rise residential condo / townhomes – 730 dwelling units
- Single-family detached homes – 423 dwelling units
- Retail commercial – 75,000 square feet
- Hotel – 75 rooms
- Community Park – 28 acres

For trip generation estimates, ITE offers both average rates, based on the pure average of all data sets for that land use, regardless of development size; as well as rates based on regression equations, which reflect the influence that the size of the development has on unit trip rates. For a more conservative analysis, the regression equation rate for the retail component was used for this analysis. Daily, AM and PM peak hour trip generation rates and adjustments, and the resulting project-related trips for the proposed Newport Banning Ranch are presented on **Table 2**.

Internal Capture

With regard to trip-generating potential, one characteristic of multi-use developments is the potential for beneficial interactions among site uses in terms of walk/bike trips or shared vehicular trips between land uses. These interactions represent the potential for a reduction in the number of new trips external to the project assumed for the new development.

For example, residents of the proposed residential developments may also patronize the proposed new commercial development. Vehicular trips between the residential neighborhoods and the shopping center would be contained within the project site, and would not contribute to traffic growth at off-site intersections. Walking and biking trips between uses would represent elimination of a vehicular trip altogether. This potential for reduction in vehicular trips is known as internal capture and mode shift. As a result of these factors, the total inbound and outbound vehicular trips for the project may be reduced.

The ITE Trip Generation Handbook (Second Edition) provides the methodology for estimating the percentage of internal capture for multi-use developments on a daily and peak hourly basis for the PM peak hour. Internally captured trips for the proposed project are balanced between the retail and residential uses. Internal capture for the proposed Newport Banning Ranch development was calculated, and the spreadsheets are provided in ***Appendix C***. The resulting internal capture percentages for each time period are incorporated into the trip generation estimates on Table 2.

TABLE 2
SUMMARY OF PROJECT TRIP GENERATION
NEWPORT BANNING RANCH

TRIP RATES

Land Use	ITE Code	Trips per	Trip Generation Rates						
			Daily	AM Peak Hour			PM Peak Hour		
				In	Out	Total	In	Out	Total
Single-Family Detached Housing	210	DU	9.57	0.19	0.56	0.75	0.64	0.37	1.01
Residential Condominium/Townhouse	230	DU	5.81	0.07	0.37	0.44	0.35	0.17	0.52
Resort Hotel [1]	330	Room	4.90	0.22	0.09	0.31	0.18	0.24	0.42
Park [2]	412	Acre	2.28	0.01	0.00	0.01	0.02	0.04	0.06
Soccer Complex	488	Field	71.33	0.70	0.70	1.40	14.26	6.41	20.67
Tennis Courts	490	Court	31.04	0.84	0.84	1.68	1.94	1.94	3.88
Shopping Center [3]	820	KSF	Equation - See Below						

PROJECT TRIP GENERATION

Project Area	Land Use	Units		Trip Generation Estimates						
				Daily	AM Peak Hour			PM Peak Hour		
					In	Out	Total	In	Out	Total
South Family Village	Single-Family Detached Housing	141	DU	1,349	27	79	106	90	52	142
	Park	28	Acre	64	0	0	0	1	1	2
	Soccer Complex	4	Fields	285	3	3	6	57	26	83
	Tennis Courts	6	Courts	186	5	5	10	12	12	24
	Subtotal			**1,884**	**35**	**87**	**122**	**160**	**91**	**251**
Resort Colony	Residential Condominium/Townhouse	87	DU	505	6	32	38	30	15	45
	Resort Hotel	75	Rooms	368	17	7	24	14	18	32
	Subtotal			**873**	**23**	**39**	**62**	**44**	**33**	**77**
North Family Village	Single-Family Detached Housing	282	DU	2,699	54	158	212	180	104	284
	Residential Condominium/Townhouse	135	DU	784	9	50	59	47	23	70
	Subtotal			**3,483**	**63**	**208**	**271**	**227**	**127**	**354**
Urban Colony	Residential Condominium/Townhouse	730	DU	4,241	51	270	321	256	124	380
	Shopping Center	75.0	KSF	5,634	79	51	130	257	268	525
	Subtotal			**9,875**	**130**	**321**	**451**	**513**	**392**	**905**
Total Before Internal Capture/Pass-by				**16,115**	**251**	**655**	**906**	**944**	**643**	**1,587**
Internal Capture [4]				**1,126**				**55**	**55**	**110**
Pass-By Reduction for Shopping Center (10%) [5]								**23**	**24**	**47**
Total Project Trips				**14,989**	**251**	**655**	**906**	**866**	**564**	**1,430**

Source: Institute of Transportation Engineers publication "Trip Generation", 8th Edition

DU = Dwelling Unit, KSF = 1,000 Square Feet

[1] ITE Land Use Category 330 Resort Hotel does not provide a daily trip rate. ITE Land Use Category 311 - All Suites Hotel was used for daily trips.

[2] Trip generation is based on ITE Land Use County Park (Land Use 412) beeause this category ineludes peak hour trip rates.

[3] Trip rates for Shopping Center are derived from the following regression equations: T = Trip Ends, X = units in KSF

ADT: $Ln(T) = 0.65\ Ln(X) + 5.83$

AM Peak Hour: $Ln(T) = 0.59\ Ln(X) + 2.32$

PM Peak Hour: $Ln(T) = 0.67\ Ln(X) + 3.37$

[4] Source: Institute of Transportation Engineers (ITE) publication "Trip Generation Handbook". See Internal Capture Worksheets in Appendix C.

[5] Note: The ITE publication "Trip Generation Handbook" indicates pass-by for a shopping center is 34% in the PM peak hour. 10% is assumed here, for a conservative approach. Pass-by reduction is taken on balance of retail trips, after Internal Capture reduction

With regard to walking and biking trips, although some site-generated traffic may shift to biking or walking to take advantage of the proposed pedestrian / bike bridge over West Coast Highway, no additional reduction in project trip generation was taken to account for this potential.

Pass-by Trips

It is recognized that not all trips into and out of the retail component of the proposed project will be "new" trips on the roadway system in the vicinity of the proposed project. Some trips to the project site will consist of "pass-by" trips -- motorists who are already traveling on the surrounding roadways from one place to another, and who stop at the project site on their way. For the mix of uses proposed for the Newport Banning Ranch project, only the commercial center would be expected to experience pass-by reductions. Common pass-by trips for a commercial center would be individuals who stop to shop or run errands on their way to or from work or school. Pass-by visitors to the commercial center would consist of both residents of the Banning Ranch development, passing the commercial center on their way to or from their homes, as well as other motorists who would use Bluff Road and 17th Street to get to and from West Coast Highway, once the roadway system for the development is in place.

The ITE Trip Generation Handbook provides pass-by rates for commercial centers, based on surveys of trip-making characteristics of other commercial centers. The Handbook provides pass-by rates for the PM peak hour only for commercial centers. Although it can be expected that pass-by would also occur in the morning peak hour, and would also affect the daily trip generation for a commercial center, the analysis for this project reflects only the pass-by potential specifically provided in the ITE Trip Generation Handbook for the PM peak hour. Based on the Handbook, the average pass-by occurrence in the PM peak hour for commercial centers is 34%. However, for a more conservative approach, the pass-by assumption used for this analysis is 10%. The pass-by trips are deducted from the shopping center trip generation on Table 2. The pass-by reduction is applied to the balance of retail trips, after the internal capture reduction is taken.

Bluff Road Alternative Trip Generation

The Project Bluff Road Alternative scenario assumes full development of the proposed Newport Banning Ranch project; therefore since the only difference for this alternative is that Bluff Road would terminate at the north development limits, just north of 17th Street, the trip generation estimates on Table 2 apply to both the Proposed Project and the Bluff Road Alternative.

Phase 1 Trip Generation

A Phase 1 project analysis has also been conducted to satisfy the requirements of the City of Newport Beach Traffic Phasing Ordinance (TPO), sub-section 030.B.2.b. Phase 1 assumes the construction of 87 residential condominium/townhouse dwelling units, 141 single-family dwelling units, and the dedication of 6.3 acres of land for a City park. Bluff Road would be constructed from West Coast Highway to 16th Street for Phase 1. Phase 1 trip generation estimates are summarized on **Table 3.**

TABLE 3
SUMMARY OF PROJECT TRIP GENERATION
NEWPORT BANNING RANCH - PHASE 1

TRIP RATES

Land Use	ITE Code	Trips per	Trip Generation Rates						
			Daily	AM Peak Hour			PM Peak Hour		
				In	Out	Total	In	Out	Total
Residential Condominum/Townhouse	230	DU	5.81	0.07	0.37	0.44	0.35	0.17	0.52
Single-Family Detached Housing	210	DU	9.57	0.19	0.56	0.75	0.64	0.37	1.01
Park [1]	412	Acre	2.28	0.01	0.00	0.01	0.02	0.04	0.06

PROJECT TRIP GENERATION

Project Area	Land Use	Units		Trip Generation Estimates						
				Daily	AM Peak Hour			PM Peak Hour		
					In	Out	Total	In	Out	Total
Phase 1	Residential Condominum/Townhouse	87	DU	505	6	32	38	30	15	45
	Single-Family Detached Housing	141	DU	1,349	27	79	106	90	52	142
	Park	6.3	Acres	14	0	0	0	0	0	0
	Subtotal			1,868	33	111	144	120	67	187
			Total Phase 1 Traffic	**1,868**	**33**	**111**	**144**	**120**	**67**	**187**

Source: Institute of Transportation Engineers publication "Trip Generation", 8th Edition

DU = Dwelling Unit, KSF = 1,000 Square Feet

[1] Trip generation is based on ITE Land Use County Park (Land Use 412) beeause this eategory includes peak hour trip rates.

Project Trip Distribution

Project trip distribution assumptions for the proposed project were developed in consultation with the City's Public Works Department, based on the City of Newport Beach city-wide traffic model – the Newport Beach Traffic Model (NBTM). The proposed project assumes the construction of Bluff Road between West Coast Highway and 19th Street, with connections to 15th Street, 16th Street, and 17th Street. A select zone run of the NBTM was conducted to isolate the project trips on the street network and to identify project trip origins and destinations. Trip distribution and assignment assumptions were finalized based on knowledge of traffic flow patterns, the roadway system in the area, the location of area trip producers, such as employment centers, commercial centers, and residential neighborhoods, and consultation with neighboring jurisdictions. Project trip distribution assumptions for the proposed project are shown on **Figure 9**.

Some project trips will use Bluff Road to access destinations along 17th, 19th, and areas to the north. For the Bluff Road Alternative (with Bluff Road terminating between 17th and 19th Street), and for Phase 1 (with Bluff Road terminating at 16th Street) project trips that were assigned to paths using the northern segments of Bluff Road were reassigned to the remaining available paths along 17th, 16th and 15th Streets, and West Coast Highway.

It also should be noted that, with development of the project site, including the construction of Bluff Road and the proposed connections to the local east/west streets, some local traffic patterns are expected to shift off the existing street system near the project site, to take advantage of the new street connection to and from W. Coast Highway. Bluff Road would provide an alternate route for traffic from Newport Beach and Costa Mesa that currently travels down Superior Avenue or Newport Boulevard to get to West Coast Highway. The NBTM was used to conduct select link runs to estimate the amount of traffic that would shift to Bluff Road when the Bluff Road connection to West Coast Highway through the project site is constructed. This reassignment of area traffic is reflected in each of the "With Project" scenarios.

EXISTING PLUS PROJECT CONDITIONS

This section analyzes the impacts associated with adding project-related trips to existing traffic volumes. The Existing Plus Project scenario is a hypothetical scenario which assumes that the Project would be fully implemented at the present time. This analysis is required by the California Environmental Quality Act (CEQA), and assumes full development of the Project and full absorption of Project traffic on the circulation system, including Bluff Road from West Coast Highway to 19th Street. The Existing Plus Project analysis was conducted for both the Proposed Project as well as the Bluff Road Alternative.

Existing Plus Proposed Project

Existing plus Proposed Project peak hour intersection operations are summarized on **Table 4**. With the addition of project traffic, the following study intersections would operate at an unacceptable Level of Service:

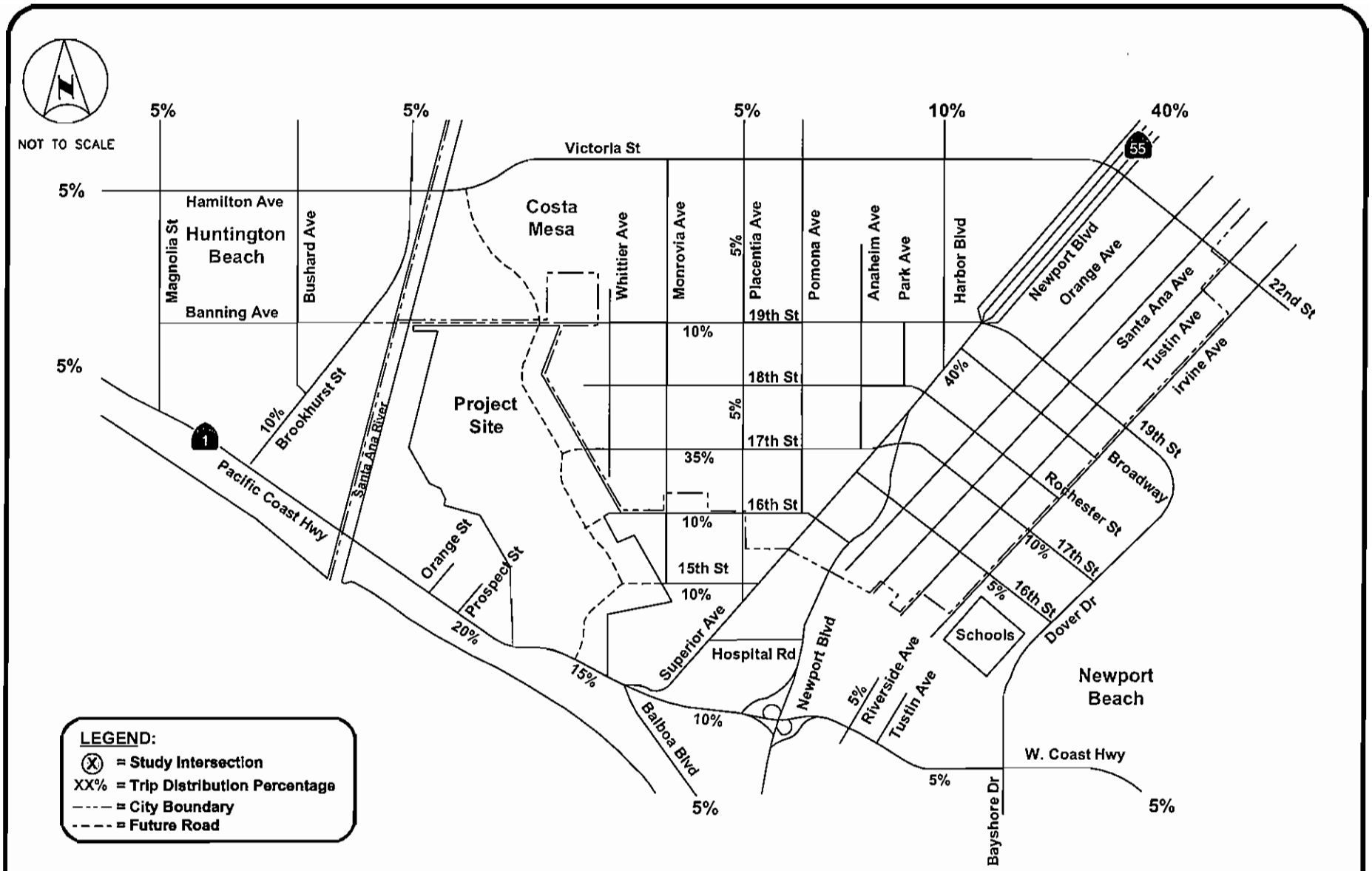

FIGURE 9
PROJECT TRIP DISTRIBUTION

FILENAME: Jun 30, 2011 – 5:28pm K:\ORA_TPTO\ZSAC\Projects\Banning Ranch\CAD\8th Submittal.dwg

Kimley-Horn and Associates, Inc.

TABLE 4
NEWPORT BANNING RANCH
SUMMARY OF INTERSECTION OPERATIONS
EXISTING PLUS PROPOSED PROJECT

		Intersection	Control	Without Project				With Project				Project Impact			
				AM Peak Hour		PM Peak Hour		AM Peak Hour		PM Peak Hour		Change		Significant ?	
				ICU/ Delay	LOS	ICU/ Delay	LOS	ICU/ Delay	LOS	ICU/ Delay	LOS	AM	PM	AM	PM
Newport Beach	1	Monrovia Ave/16th St	U	8.8	A	8.2	A	10.5	B	10.2	B	1.7	2.0	No	No
	2	Placentia Ave/15th St	S	0.45	A	0.34	A	0.58	A	0.48	A	0.138	0.136	No	No
	3	Superior Ave/15th St	U	19.6	C	22.9	C	21.0	C	25.8	D	1.4	2.9	No	No
	4	Superior Ave/Placentia Ave	S	0.50	A	0.57	A	0.49	A	0.52	A	-0.016	-0.058	No	No
	5	Newport Blvd/Hospital Rd	S	0.49	A	0.58	A	0.49	A	0.58	A	0.000	0.000	No	No
	6	Orange St/W. Coast Hwy	S	0.73	C	0.66	B	0.74	C	0.68	B	0.011	0.028	No	No
	7	Prospect St/W. Coast Hwy	S	0.72	C	0.66	B	0.74	C	0.69	B	0.011	0.028	No	No
	8	Superior Ave/W. Coast Hwy	S	0.65	B	0.65	B	0.66	B	0.60	A	0.014	-0.053	No	No
	9	Newport Blvd/W. Coast Hwy	S	0.83	D	0.64	B	0.85	D	0.66	B	0.023	0.024	No	No
	10	Riverside Ave/W. Coast Hwy	S	0.65	B	0.71	C	0.67	B	0.75	C	0.017	0.039	No	No
	11	Tustin Ave/W. Coast Hwy	S	0.65	B	0.58	A	0.67	B	0.61	B	0.017	0.038	No	No
	12	Dover Dr/W. Coast Hwy	S	0.63	B	0.71	C	0.64	B	0.72	C	0.008	0.013	No	No
Huntington Beach	13	Magnolia St/Hamilton Ave	S	0.53	A	0.54	A	0.55	A	0.56	A	0.020	0.022	No	No
	14	Bushard St/Hamilton Ave	S	0.42	A	0.53	A	0.43	A	0.54	A	0.003	0.008	No	No
	15	Brookhurst St/Hamilton Ave (Victoria St)	S	0.67	B	0.64	B	0.68	B	0.64	B	0.002	0.006	No	No
	16	Magnolia St/Banning Ave	S	0.23	A	0.27	A	0.25	A	0.28	A	0.017	0.011	No	No
	17	Bushard St/Banning Ave	U	9.9	A	9.0	A	9.9	A	9.0	A	0.0	0.0	No	No
	18	Brookhurst St/Banning Ave	S	0.25	A	0.24	A	0.26	A	0.25	A	0.005	0.011	No	No
	19	Magnolia St/Pacific Coast Hwy	S	0.48	A	0.58	A	0.48	A	0.58	A	0.007	0.007	No	No
	20	Brookhurst St/Bushard St	S	0.32	A	0.32	A	0.32	A	0.34	A	0.005	0.016	No	No
	21	Brookhurst St/Pacific Coast Hwy	S	0.56	A	0.65	B	0.57	A	0.68	B	0.013	0.028	No	No
Costa Mesa	22	Placentia Ave/Victoria St	S	0.74	C	0.79	C	0.75	C	0.81	D	0.004	0.016	No	No
	23	Pomona Ave/Victoria St	S	0.63	B	0.66	B	0.63	B	0.66	B	0.000	0.000	No	No
	24	Harbor Blvd/Vietoria St	S	0.70	B	0.78	C	0.71	C	0.79	C	0.006	0.014	No	No
	25	Newport Blvd/Victoria St	S	0.55	A	0.45	A	0.55	A	0.45	A	0.000	0.000	No	No
	26	Newport Blvd/Victoria St (22nd St)	S	0.96	E	0.57	A	0.96	E	0.57	A	0.000	0.000	No	No
	27	Whittier Ave/19th St	U	9.9	A	9.0	A	10.7	B	9.9	A	0.8	0.9	No	No
	28	Monrovia Ave/19th St	U	16.9	C	13.0	B	27.9	D	17.8	C	11.0	4.8	No	No
	29	Placentia Ave/19th St	S	0.48	A	0.68	B	0.52	A	0.71	C	0.032	0.026	No	No
	30	Pomona Ave/19th St	S	0.47	A	0.57	A	0.50	A	0.59	A	0.030	0.026	No	No
	31	Anaheim Ave/19th St	S	0.47	A	0.55	A	0.50	A	0.57	A	0.030	0.023	No	No
	32	Park Ave/19th St	S	0.44	A	0.54	A	0.47	A	0.57	A	0.029	0.022	No	No

TABLE 4
NEWPORT BANNING RANCH
SUMMARY OF INTERSECTION OPERATIONS
EXISTING PLUS PROPOSED PROJECT

		Intersection	Control	Without Project				With Project				Project Impact			
				AM Peak Hour		PM Peak Hour		AM Peak Hour		PM Peak Hour		Change		Significant ?	
				ICU/ Delay	LOS	ICU/ Delay	LOS	ICU/ Delay	LOS	ICU/ Delay	LOS	AM	PM	AM	PM
Costa Mesa	33	Harbor Blvd/19th St	S	0.40	A	0.56	A	0.42	A	0.61	B	0.020	0.051	No	No
	34	Newport Blvd/19th St	S	0.80	C	0.77	C	0.85	D	0.82	D	0.051	0.043	No	No
	35	Newport Blvd/Broadway	S	0.58	A	0.72	C	0.60	A	0.79	C	0.019	0.066	No	No
	36	Newport Blvd/Harbor Blvd	S	0.70	B	0.97	**E**	0.72	C	1.05	**F**	0.025	0.079	No	***Yes***
	37	Newport Blvd/18th St (Rochester St)	S	0.73	C	0.97	**E**	0.76	C	1.05	**F**	0.033	0.080	No	***Yes***
	38	Placentia Ave/18th St	S	0.44	A	0.47	A	0.44	A	0.50	A	0.002	0.036	No	No
	39	Whittier Ave/17th St	U	7.4	A	7.3	A	9.5	A	11.1	B	2.1	3.8	No	No
	40	Monrovia Ave/17th St	U	9.5	A	8.8	A	13.5	B	15.0	B	4.0	6.2	No	No
	41	Placentia Ave/17th St	S	0.41	A	0.52	A	0.43	A	0.65	B	0.026	0.128	No	No
	42	Pomona Ave/17th St	U	13.4	B	13.9	B	19.2	C	34.7	D	5.8	20.8	No	No
	43	Superior Ave/17th St	S	0.65	B	0.75	C	0.75	C	0.91	**E**	0.102	0.165	No	***Yes***
	44	Newport Blvd/17th St	S	0.74	C	0.81	D	0.78	C	0.85	D	0.047	0.045	No	No
	45	Orange Ave/17th St	S	0.42	A	0.61	B	0.44	A	0.64	B	0.024	0.034	No	No
	46	Santa Ana Ave/17th St	S	0.39	A	0.60	A	0.42	A	0.63	B	0.024	0.033	No	No
	47	Tustin Ave/17th St	S	0.47	A	0.64	B	0.50	A	0.67	B	0.024	0.033	No	No
	48	Irvine Ave/17th St	S	0.49	A	0.63	B	0.51	A	0.65	B	0.024	0.023	No	No
	49	Placentia Ave/16th St	S	0.32	A	0.29	A	0.33	A	0.38	A	0.010	0.085	No	No
	50	Superior Ave/16th St	S	0.47	A	0.43	A	0.54	A	0.55	A	0.070	0.121	No	No
	51	Newport Blvd/16th St	S	0.49	A	0.54	A	0.51	A	0.56	A	0.016	0.017	No	No
	52	Bluff Rd/Victoria St	S	Future Intersection				0.47	A	0.53	A	0.470	0.534	No	No
On-Site	53	Bluff Rd/19th St	S	Future Intersections				0.08	A	0.12	A	0.078	0.117	No	No
	54	Bluff Rd/17th St	S					0.12	A	0.18	A	0.121	0.178	No	No
	55	Bluff Rd/16th St	U					13.3	B	18.7	C	13.3	18.7	No	No
	56	Bluff Rd/15th St	S					0.25	A	0.43	A	0.249	0.428	No	No
	57	Bluff Rd/W. Coast Hwy	S					0.60	A	0.77	C	0.604	0.768	No	No
	58	Monrovia Ave/15th Street	U	7.5	A	7.4	A	9.3	A	9.3	A	1.8	1.9	No	No

Notes:
S = Signalized, U = Unsignalized
Bold and shaded values indicate intersections operating at LOS E or F.
Interseetion operation is expressed in average seconds of delay per vehicle during the peak hour for unsignalized intersections using the HCM 2000 Methodology and is expressed in volume-to-capacity (v/c) for signalized intersections using the ICU Methodology.

Costa Mesa Intersection (s):

- 26. Newport Boulevard at Victoria Street/22nd Street (AM: LOS E)
- 36. Newport Boulevard at Harbor Boulevard (PM: LOS F)
- 37. Newport Boulevard at 18th Street/Rochester Street (PM: LOS F)
- 43. Superior Avenue at 17th Street (PM: LOS E)

The deficient study intersection locations are shown on **Figure 10**.

The addition of project-related traffic would result in a significant impact at the following intersections:

- 36. Newport Boulevard at Harbor Boulevard (PM: LOS F – project impact 0.079)
- 37. Newport Boulevard at 18th Street/Rochester Street (PM: LOS F – project impact 0.080)
- 43. Superior Avenue at 17th Street (PM: LOS E – project impact 0.165)

Of these intersections, Intersections 36 and 37 were also identified as operating deficiently under the existing condition.

Existing Plus Project – Bluff Road Alternative

Existing plus Project – Bluff Road Alternative peak hour intersection operations are summarized on **Table 5**. With the addition of project traffic, the same study intersections that currently operate at an unacceptable Level of Service would continue to do so, with one additional intersection:

Costa Mesa Intersection (s):

- 26. Newport Boulevard at Victoria Street/22nd Street (AM: LOS E)
- 36. Newport Boulevard at Harbor Boulevard (PM: LOS F)
- 37. Newport Boulevard at 18th Street/Rochester Street (PM: LOS F)
- 42. Pomona Avenue at 17th Street (PM: LOS E)
- 43. Superior Avenue at 17th Street (PM: LOS E)

The deficient study intersection locations are shown on **Figure 11**.

The project-related traffic would result in a significant impact at the following intersections:

- 36. Newport Boulevard at Harbor Boulevard (PM: LOS F – project impact 0.099)
- 37. Newport Boulevard at 18th Street/Rochester Street (PM: LOS F – project impact 0.045)
- 42. Pomona Avenue at 17th Street (PM: LOS E – LOS E at an unsignalized intersection)
- 43. Superior Avenue at 17th Street (PM: LOS E – project impact 0.196)

Of these intersections, Intersections 36 and 37 were also identified as operating deficiently under the existing condition.

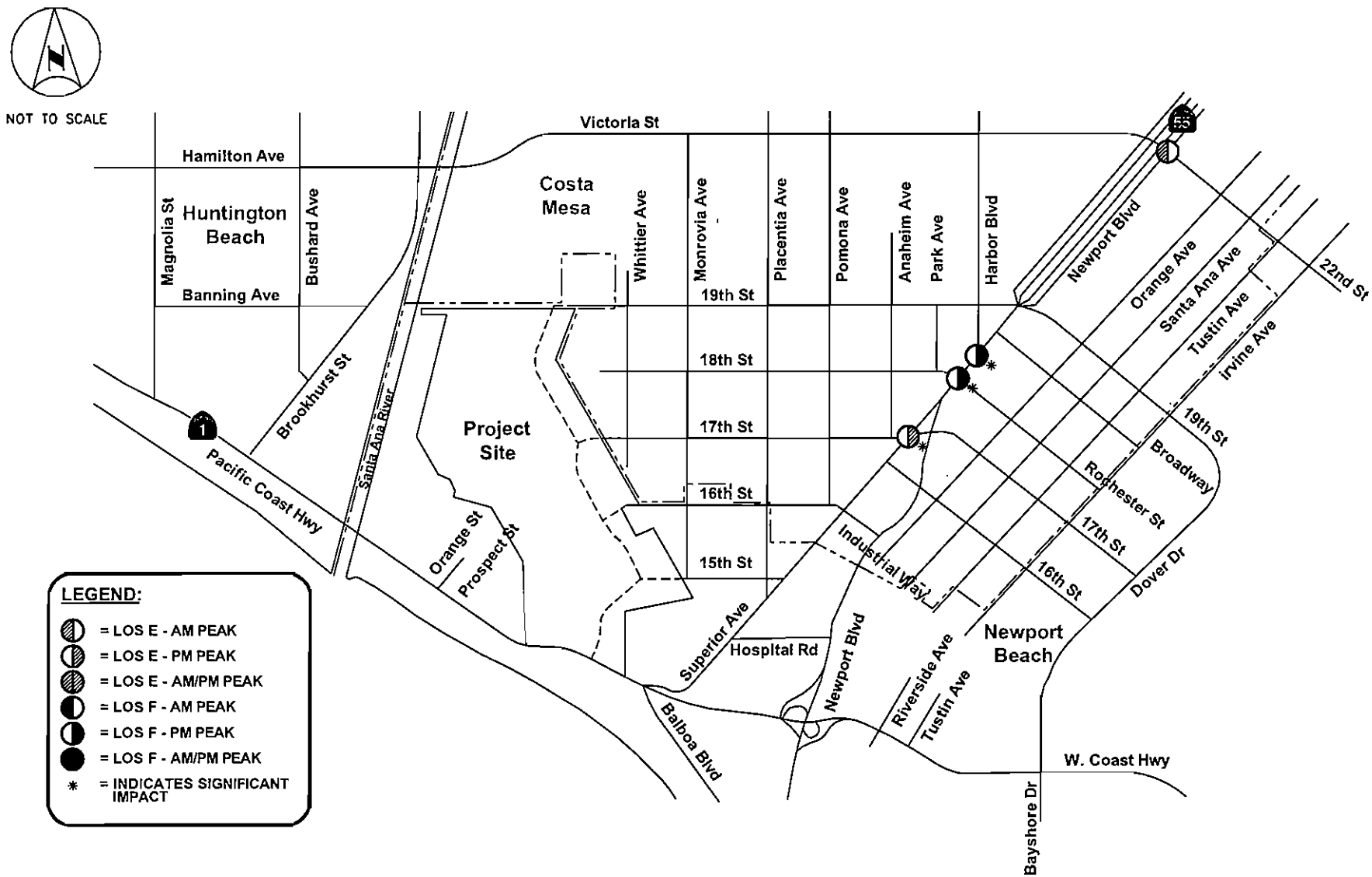

FIGURE 10
DEFICIENT INTERSECTIONS -
EXISTING PLUS PROJECT CONDITIONS

FILENAME: Jun 30, 2011 - 5:29pm K:\ORA_TPTO\ZSAC\Projects\Banning Ranch\CAD\5th Submittal.dwg

Kimley-Horn and Associates, Inc.

TABLE 5
NEWPORT BANNING RANCH
SUMMARY OF INTERSECTION OPERATIONS
EXISTING PLUS PROJECT - BLUFF ROAD ALTERNATIVE

		Intersection	Control	Without Project				With Project				Project Impact			
				AM Peak Hour		PM Peak Hour		AM Peak Hour		PM Peak Hour		Change		Significant ?	
				ICU/ Delay	LOS	ICU/ Delay	LOS	ICU/ Delay	LOS	ICU/ Delay	LOS	AM	PM	AM	PM
Newport Beach	1	Monrovia Ave/16th St	U	8.8	A	8.2	A	10.9	B	10.5	B	2.1	2.3	No	No
	2	Placentia Ave/15th St	S	0.45	A	0.34	A	0.59	A	0.49	A	0.140	0.144	No	No
	3	Superior Ave/15th St	U	19.6	C	22.9	C	21.0	C	25.8	D	1.4	2.9	No	No
	4	Superior Ave/Placentia Ave	S	0.50	A	0.57	A	0.49	A	0.52	A	-0.016	-0.053	No	No
	5	Newport Blvd/Hospital Rd	S	0.49	A	0.58	A	0.49	A	0.58	A	0.000	0.000	No	No
	6	Orange St/W. Coast Hwy	S	0.73	C	0.66	B	0.74	C	0.68	B	0.011	0.028	No	No
	7	Prospect St/W. Coast Hwy	S	0.72	C	0.66	B	0.74	C	0.69	B	0.011	0.028	No	No
	8	Superior Ave/W. Coast Hwy	S	0.65	B	0.65	B	0.66	B	0.60	A	0.012	-0.053	No	No
	9	Newport Blvd/W. Coast Hwy	S	0.83	D	0.64	B	0.85	D	0.66	B	0.021	0.021	No	No
	10	Riverside Ave/W. Coast Hwy	S	0.65	B	0.71	C	0.67	B	0.74	C	0.017	0.027	No	No
	11	Tustin Ave/W. Coast Hwy	S	0.65	B	0.58	A	0.67	B	0.62	B	0.017	0.040	No	No
	12	Dover Dr/W. Coast Hwy	S	0.63	B	0.71	C	0.64	B	0.72	C	0.008	0.013	No	No
Huntington Beach	13	Magnolia St/Hamilton Ave	S	0.53	A	0.54	A	0.55	A	0.56	A	0.020	0.024	No	No
	14	Bushard St/Hamilton Ave	S	0.42	A	0.53	A	0.43	A	0.54	A	0.003	0.008	No	No
	15	Brookhurst St/Hamilton Ave (Victoria St)	S	0.67	B	0.64	B	0.68	B	0.64	B	0.003	0.006	No	No
	16	Magnolia St/Banning Ave	S	0.23	A	0.27	A	0.25	A	0.28	A	0.016	0.011	No	No
	17	Bushard St/Banning Ave	U	9.9	A	9.0	A	9.9	A	9.0	A	0.0	0.0	No	No
	18	Brookhurst St/Banning Ave	S	0.25	A	0.24	A	0.26	A	0.25	A	0.005	0.012	No	No
	19	Magnolia St/Pacific Coast Hwy	S	0.48	A	0.58	A	0.48	A	0.58	A	0.007	0.007	No	No
	20	Brookhurst St/Bushard St	S	0.32	A	0.32	A	0.32	A	0.34	A	0.005	0.016	No	No
	21	Brookhurst St/Pacific Coast Hwy	S	0.56	A	0.65	B	0.57	A	0.68	B	0.013	0.028	No	No
Costa Mesa	22	Placentia Ave/Victoria St	S	0.74	C	0.79	C	0.75	C	0.81	D	0.004	0.016	No	No
	23	Pomona Ave/Victoria St	S	0.63	B	0.66	B	0.63	B	0.66	B	0.000	0.000	No	No
	24	Harbor Blvd/Victoria St	S	0.70	B	0.78	C	0.71	C	0.79	C	0.006	0.014	No	No
	25	Newport Blvd/Victoria St	S	0.55	A	0.45	A	0.55	A	0.45	A	0.000	0.000	No	No
	26	Newport Blvd/Victoria St (22nd St)	S	0.96	E	0.57	A	0.96	E	0.57	A	0.000	0.000	No	No
	27	Whittier Ave/19th St	U	9.9	A	9.0	A	9.9	A	9.0	A	0.0	0.0	No	No
	28	Monrovia Ave/19th St	U	16.9	C	13.0	B	16.9	C	13.0	B	0.0	0.0	No	No
	29	Placentia Ave/19th St	S	0.48	A	0.68	B	0.49	A	0.70	B	0.006	0.016	No	No
	30	Pomona Ave/19th St	S	0.47	A	0.57	A	0.47	A	0.57	A	0.004	0.004	No	No
	31	Anaheim Ave/19th St	S	0.47	A	0.55	A	0.47	A	0.55	A	0.004	0.003	No	No
	32	Park Ave/19th St	S	0.44	A	0.54	A	0.45	A	0.55	A	0.004	0.003	No	No

TABLE 5
NEWPORT BANNING RANCH
SUMMARY OF INTERSECTION OPERATIONS
EXISTING PLUS PROJECT - BLUFF ROAD ALTERNATIVE

		Intersection	Control	Without Project				With Project				Project Impact			
				AM Peak Hour		PM Peak Hour		AM Peak Hour		PM Peak Hour		Change		Significant ?	
				ICU/ Delay	LOS	ICU/ Delay	LOS	ICU/ Delay	LOS	ICU/ Delay	LOS	AM	PM	AM	PM
Costa Mesa	33	Harbor Blvd/19th St	S	0.40	A	0.56	A	0.40	A	0.58	A	0.003	0.024	No	No
	34	Newport Blvd/19th St	S	0.80	C	0.77	C	0.84	D	0.81	D	0.048	0.041	No	No
	35	Newport Blvd/Broadway	S	0.58	A	0.72	C	0.60	A	0.80	C	0.023	0.081	No	No
	36	Newport Blvd/Harbor Blvd	S	0.70	B	0.97	**E**	0.73	C	1.07	**F**	0.031	0.099	No	***Yes***
	37	Newport Blvd/18th St (Rochester St)	S	0.73	C	0.97	**E**	0.77	C	1.07	**F**	0.045	0.101	No	***Yes***
	38	Placentia Ave/18th St	S	0.44	A	0.47	A	0.45	A	0.53	A	0.011	0.061	No	No
	39	Whittier Ave/17th St	U	7.4	A	7.3	A	10.2	B	12.1	B	2.8	4.8	No	No
	40	Monrovia Ave/17th St	U	9.5	A	8.8	A	13.9	B	16.0	C	4.4	7.2	No	No
	41	Placentia Ave/17th St	S	0.41	A	0.52	A	0.46	A	0.67	B	0.052	0.147	No	No
	42	Pomona Ave/17th St	U	13.4	B	13.9	B	20.8	C	39.0	**E**	7.4	25.1	No	***Yes***
	43	Superior Ave/17th St	S	0.65	B	0.75	C	0.77	C	0.94	**E**	0.123	0.196	No	***Yes***
	44	Newport Blvd/17th St	S	0.74	C	0.81	D	0.80	C	0.86	D	0.058	0.053	No	No
	45	Orange Ave/17th St	S	0.42	A	0.61	B	0.44	A	0.64	B	0.024	0.031	No	No
	46	Santa Ana Ave/17th St	S	0.39	A	0.60	A	0.42	A	0.63	B	0.024	0.031	No	No
	47	Tustin Ave/17th St	S	0.47	A	0.64	B	0.50	A	0.67	B	0.023	0.030	No	No
	48	Irvine Ave/17th St	S	0.49	A	0.63	B	0.51	A	0.65	B	0.024	0.020	No	No
	49	Placentia Ave/16th St	S	0.32	A	0.29	A	0.36	A	0.40	A	0.042	0.109	No	No
	50	Superior Ave/16th St	S	0.47	A	0.43	A	0.57	A	0.57	A	0.095	0.145	No	No
	51	Newport Blvd/16th St	S	0.49	A	0.54	A	0.51	A	0.56	A	0.017	0.018	No	No
	52	Bluff Rd/Victoria St	S	Future Intersection				Future Intersection				N/A		N/A	
On-Site	53	Bluff Rd/19th St	S	Future Intersections				Future Intersection				N/A		N/A	
	54	Bluff Rd/17th St	S					0.13	A	0.15	A	0.133	0.154	No	No
	55	Bluff Rd/16th St	U					14.6	B	19.0	C	14.6	19.0	No	No
	56	Bluff Rd/15th St	S					0.18	A	0.28	A	0.180	0.276	No	No
	57	Bluff Rd/W. Coast Hwy	S					0.61	B	0.76	C	0.606	0.763	No	No
	58	Monrovia Ave/15th Street	U	7.5	A	7.4	A	9.2	A	9.3	A	1.7	1.9	No	No

Notes:
S = Signalized, U = Unsignalized
Bold and shaded values indicate intersections operating at LOS E or F.
Intersection operation is expressed in average seconds of delay per vehicle during the peak hour for unsignalized intersections using the HCM 2000 Methodology and is expressed in volume-to-capacity (v/c) for signalized intersections using the ICU Methodology.

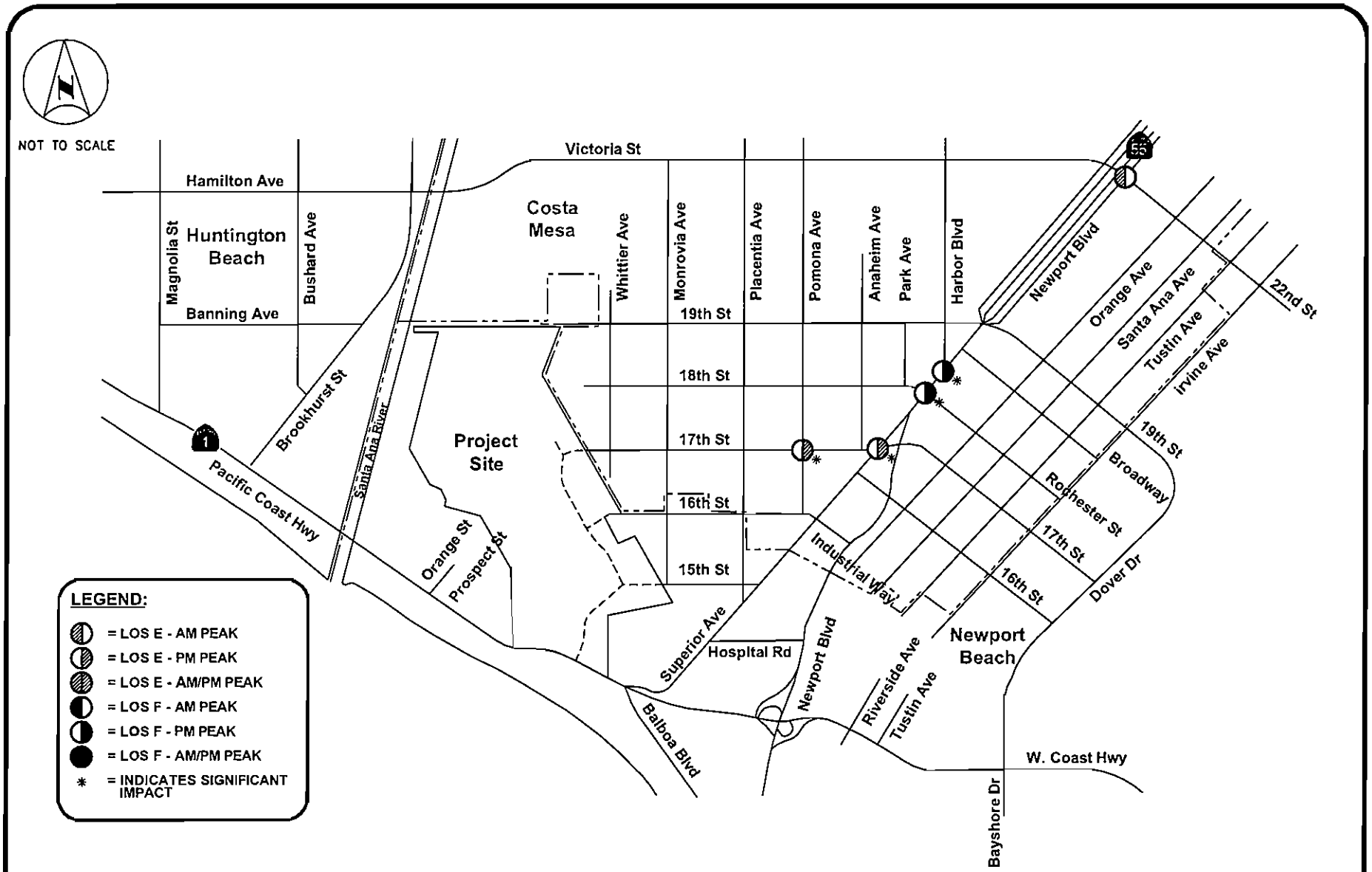

FIGURE 11
DEFICIENT INTERSECTIONS -
EXISTING PLUS PROJECT - BLUFF ROAD ALTERNATIVE

FILENAME: Jun 30, 2011 - 5:30pm K:\ORA_TPTO\ZSAC\Projects\Banning Ranch\CAD\6th Submittal.dwg

Kimley-Horn and Associates, Inc.

FUTURE CONDITIONS

Near-term future traffic forecasts have been developed for two analysis conditions – Year 2016 with Existing plus Growth plus Committed Projects traffic, representing analysis of the conditions required by the City of Newport Beach Traffic Phasing Ordinance (TPO); and Year 2016 with Existing plus Growth plus Committed plus Cumulative Projects, as required by the California Environmental Quality Act (CEQA). A discussion of each is provided in the following sections.

Year 2016 Traffic Phasing Ordinance (TPO) Analysis

The City of Newport Beach TPO first requires determination of whether project trips will increase traffic volumes on any leg of a Primary Intersection [1] by one percent or more during either the morning or evening peak hour one year after project completion, or that portion of the project expected to be constructed within five years (sixty months) of project approval. The TPO then requires a Level of Service analysis of the project impact at any Primary Intersection that exceeds the 1% threshold. Although the entire Newport Banning Ranch project is not anticipated to be completed within five years of approval, for a worst-case analysis, the entire project is analyzed in Year 2016.

Year 2016 TPO peak hour traffic forecasts consist of existing peak hour traffic volumes, plus an ambient growth rate, plus traffic from Committed Projects in the City of Newport Beach. In accordance with TPO requirements, an ambient growth rate of 1.0 percent per year is added to existing peak hour volumes on primary roadways (West Coast Highway, Newport Boulevard, and Irvine Avenue). For study intersections in the cities of Costa Mesa and Huntington Beach, in accordance with direction from City staff, a 1.0 percent per year growth was applied to all peak hour traffic volumes.

Committed Projects are projects in the City of Newport Beach that have been approved but are not yet built; or are partially built, but not yet fully occupied. Committed Project information was provided by the City of Newport Beach staff. A list of the Committed Projects is provided in **Table 6.** A copy of the Committed Projects data sheets provided by the City of Newport Beach is included in ***Appendix D.*** The ambient growth, plus Committed Projects traffic were added to peak hour volumes to develop Year 2016 TPO without Project peak hour forecasts.

[1] A list of Primary Intersections is provided in Appendix B of the City of Newport Beach Traffic Phasing Ordinance.

TABLE 6
LIST OF COMMITTED PROJECTS

City Project Number	Project Name	Percent Complete
148	Fashion Island Expansion	40%
154	Temple Bat Yahm Expansion	65%
555	Ciosa – Irvine Project	91%
910	Newport Dunes	0%
936	1401 Dove Street	0%
945	Hoag Hospital Phase III	0%
947	Birch Medical Office Complex	0%
949	St. Mark Presbyterian Church	77%
951	Corporate Plaza West	60%
952	Mariner's Mile Gateway	0%
954	OLQA Church Expansion	0%
955	2300 Newport Blvd	0%
957	Newport Executive Court	0%
958	Hoag Healthcare Center	0%
959	North Newport Center	0%
960	Santa Barbara Condo	0%

Source: City of Newport Beach – Traffic Phasing Data – Includes approved projects less than 100% complete.

Note: Percent complete represents the status of project completion at the time of the traffic count data collection.

There are no planned transportation improvements expected to be in place by Year 2016 for any of the study intersections or the study area roadways, therefore, the area transportation network and intersection lane geometrics for all Year 2016 scenarios are assumed to be the same as for Existing Conditions. The extension of 19th Street over the Santa Ana River (the 19th Street Bridge) is not assumed in Year 2016. A discussion of the 19th Street Bridge is provided in a later section of the report. Bluff Road and the connections to the local east/west streets that are proposed by the project are assumed to be constructed only in the "With Project" scenarios.

TPO One Percent Analysis

For the TPO One Percent Analysis, the project-related peak hour traffic volumes were compared to the Existing plus Growth plus Committed Projects peak hour volumes on each leg of each Newport Beach study intersection that is on the Primary Intersection list to determine whether or not the project would exceed the 1% Test. Nine of the study intersections are on the Primary Intersection List. The results of the 1% analysis are summarized on **Table 7.** One Percent Analysis worksheets are provided in ***Appendix E.*** As shown on the table, the project traffic will exceed 1% on one or more approach legs at eight of the nine Newport Beach study intersections. Project traffic will not exceed 1% on any approach in either peak hour at the following intersection:

- 5. Newport Boulevard at Hospital Road.

This study will proceed with a TPO traffic impact analysis at the remaining intersections in Newport Beach. It should be noted that the 1% Analysis was not conducted for the intersections in the City of Huntington Beach or the City of Costa Mesa, since the TPO requirement only applies to the City of Newport Beach intersections. All of the study intersections in the cities of Huntington Beach and Costa Mesa have been analyzed for all study scenarios in this report.

Year 2016 TPO without Project Conditions

Intersection analysis was conducted for the Year 2016 TPO without Project Conditions (Existing plus Growth plus Committed Projects). Intersection analysis worksheets are provided in ***Appendix F.*** Year 2016 TPO without Project peak hour intersection operations are summarized on **Table 8.** The following intersections would operate below acceptable standards under this scenario:

Costa Mesa Intersection (s):

- 26. Newport Boulevard at Victoria Street/22nd Street (AM: LOS F)
- 36. Newport Boulevard at Harbor Boulevard (PM: LOS F)
- 37. Newport Boulevard at 18th Street/Rochester Street (PM: LOS F)

These are the same intersections found to be deficient at LOS E under Existing Conditions. The addition of ambient growth and Committed Projects traffic would cause each intersection to deteriorate to LOS F. The deficient study intersection locations for this scenario are shown on **Figure 12.** All other study intersections would operate at an acceptable level of service (LOS D or better) in both peak hours.

TABLE 7
SUMMARY OF 1% ANALYSIS
TPO ANALYSIS

No.	Intersection	Condition	Northbound Approach		Southbound Approach		Eastbound Approach		Westbound Approach	
			AM	PM	AM	PM	AM	PM	AM	PM
4	Superior Avenue @ Placentia Avenue	1% of projected pk hr volume	12	7	3	9	6	5	3	5
		Project peak hour volume	0	0	26	64	59	41	0	0
		Project traffic less than 1%?	Y	Y	N	N	N	N	Y	Y
5	Newport Blvd @ Hospital Road	1% of projected pk hr volume	18	16	16	19	5	7	3	3
		Project peak hour volume	0	0	0	0	0	0	0	0
		Project traffic less than 1%?	Y	Y	Y	Y	Y	Y	Y	Y
6	Orange Street @ W. Coast Highway	1% of projected pk hr volume	1	1	1	1	29	14	10	31
		Project peak hour volume	0	0	0	0	42	113	103	78
		Project traffic less than 1%?	Y	Y	Y	Y	N	N	N	N
8	Superior Avenue @ W. Coast Highway	1% of projected pk hr volume	6	5	6	13	30	16	11	24
		Project peak hour volume	10	28	0	0	93	61	20	67
		Project traffic less than 1%?	N	N	Y	Y	N	N	N	N
9	Newport Blvd @ W. Coast Highway	1% of projected pk hr volume	0	0	8	11	24	16	13	25
		Project peak hour volume	0	0	0	0	67	41	20	67
		Project traffic less than 1%?	N	N	Y	Y	N	N	N	N
10	Riverside Ave @ W. Coast Highway	1% of projected pk hr volume	0	0	4	5	24	18	14	25
		Project peak hour volume	0	0	6	23	67	41	14	44
		Project traffic less than 1%?	N	N	N	N	N	N	Y	N
11	Tustin Ave @ W. Coast Highway	1% of projected pk hr volume	0	0	0	1	22	17	14	25
		Project peak hour volume	0	0	4	15	42	28	10	28
		Project traffic less than 1%?	N	N	N	N	N	N	Y	N
12	Dover Drive @ W. Coast Highway	1% of projected pk hr volume	1	1	10	11	23	17	19	35
		Project peak hour volume	0	0	0	0	26	20	10	28
		Project traffic less than 1%?	Y	Y	Y	Y	N	N	Y	Y
48	Irvine Avenue @ 17th Street	1% of projected pk hr volume	9	11	8	11	9	11	4	8
		Project peak hour volume	0	0	0	0	32	35	20	42
		Project traffic less than 1%?	Y	Y	Y	Y	N	N	N	N

TABLE 8
NEWPORT BANNING RANCH
SUMMARY OF INTERSECTION OPERATIONS
YEAR 2016 WITHOUT PROJECT - TPO ANALYSIS

		Intersection	Control	Without Project			
				AM Peak Hour		PM Peak Hour	
				ICU/ Delay	LOS	ICU/ Delay	LOS
Newport Beach	1	Monrovia Ave/16th St	U	8.8	A	8.2	A
	2	Placentia Ave/15th St	S	0.45	A	0.35	A
	3	Superior Ave/15th St	U	20.9	C	28.1	D
	4	Superior Ave/Placentia Ave	S	0.53	A	0.60	A
	5	Newport Blvd/Hospital Rd	S	0.53	A	0.64	B
	6	Orange St/W. Coast Hwy	S	0.79	C	0.72	C
	7	Prospect St/W. Coast Hwy	S	0.78	C	0.72	C
	8	Superior Ave/W. Coast Hwy	S	0.70	B	0.70	B
	9	Newport Blvd/W. Coast Hwy	S	0.90	D	0.70	B
	10	Riverside Ave/W. Coast Hwy	S	0.73	C	0.77	C
	11	Tustin Ave/W. Coast Hwy	S	0.73	C	0.64	B
	12	Dover Dr/W. Coast Hwy	S	0.69	B	0.78	C
Huntington Beach	13	Magnolia St/Hamilton Ave	S	0.57	A	0.57	A
	14	Bushard St/Hamilton Ave	S	0.45	A	0.56	A
	15	Brookhurst St/Hamilton Ave (Victoria St)	S	0.72	C	0.68	B
	16	Magnolia St/Banning Ave	S	0.25	A	0.30	A
	17	Bushard St/Banning Ave	U	10.2	B	9.2	A
	18	Brookhurst St/Banning Ave	S	0.27	A	0.25	A
	19	Magnolia St/Pacific Coast Hwy	S	0.52	A	0.63	B
	20	Brookhurst St/Bushard St	S	0.34	A	0.35	A
	21	Brookhurst St/Pacific Coast Hwy	S	0.61	B	0.71	C
Costa Mesa	22	Placentia Ave/Victoria St	S	0.80	C	0.85	D
	23	Pomona Ave/Victoria St	S	0.67	B	0.71	C
	24	Harbor Blvd/Victoria St	S	0.75	C	0.83	D
	25	Newport Blvd/Victoria St	S	0.59	A	0.48	A
	26	Newport Blvd/Victoria St (22nd St)	S	1.03	F	0.61	B
	27	Whittier Ave/19th St	U	10.3	B	9.2	A
	28	Monrovia Ave/19th St	U	19.9	C	14.0	B
	29	Placentia Ave/19th St	S	0.52	A	0.73	C
	30	Pomona Ave/19th St	S	0.50	A	0.61	B
	31	Anaheim Ave/19th St	S	0.50	A	0.58	A
	32	Park Ave/19th St	S	0.47	A	0.58	A
	33	Harbor Blvd/19th St	S	0.43	A	0.60	A
	34	Newport Blvd/19th St	S	0.86	D	0.83	D
	35	Newport Blvd/Broadway	S	0.62	B	0.78	C
	36	Newport Blvd/Harbor Blvd	S	0.75	C	1.06	F
	37	Newport Blvd/18th St (Rochester St)	S	0.79	C	1.07	F
	38	Placentia Ave/18th St	S	0.47	A	0.50	A
	39	Whittier Ave/17th St	U	7.4	A	7.4	A
	40	Monrovia Ave/17th St	U	9.9	A	9.0	A
	41	Placentia Ave/17th St	S	0.44	A	0.56	A
	42	Pomona Ave/17th St	U	14.8	B	15.5	C
	43	Superior Ave/17th St	S	0.70	B	0.81	D
	44	Newport Blvd/17th St	S	0.80	C	0.88	D
	45	Orange Ave/17th St	S	0.44	A	0.66	B
	46	Santa Ana Ave/17th St	S	0.42	A	0.64	B
	47	Tustin Ave/17th St	S	0.51	A	0.70	B
	48	Irvine Ave/17th St	S	0.53	A	0.69	B
	49	Placentia Ave/16th St	S	0.34	A	0.32	A
	50	Superior Ave/16th St	S	0.52	A	0.49	A
	51	Newport Blvd/16th St	S	0.55	A	0.60	A
	52	Bluff Rd/Victoria St	Future Intersection				

TABLE 8
NEWPORT BANNING RANCH
SUMMARY OF INTERSECTION OPERATIONS
YEAR 2016 WITHOUT PROJECT - TPO ANALYSIS

		Intersection	Control	Without Project			
				AM Peak Hour		PM Peak Hour	
				ICU/ Delay	LOS	ICU/ Delay	LOS
On-Site	53	Bluff Rd/19th St	Future Intersections				
	54	Bluff Rd/17th St					
	55	Bluff Rd/16th St					
	56	Bluff Rd/15th St					
	57	Bluff Rd/W. Coast Hwy					
	58	Monrovia Ave/15th Street	U	7.5	A	7.4	A

Notes:
S = Signalized, U=Unsignalized
Bold and shaded values indicate intersections operating at LOS E or F.
Intersection operation is expressed in average seconds of delay per vehicle during the peak hour for unsignalized intersections using the HCM 2000 Methodology and is expressed in volume-to-eapacity (v/c) for signalized intersections using the ICU Methodology.

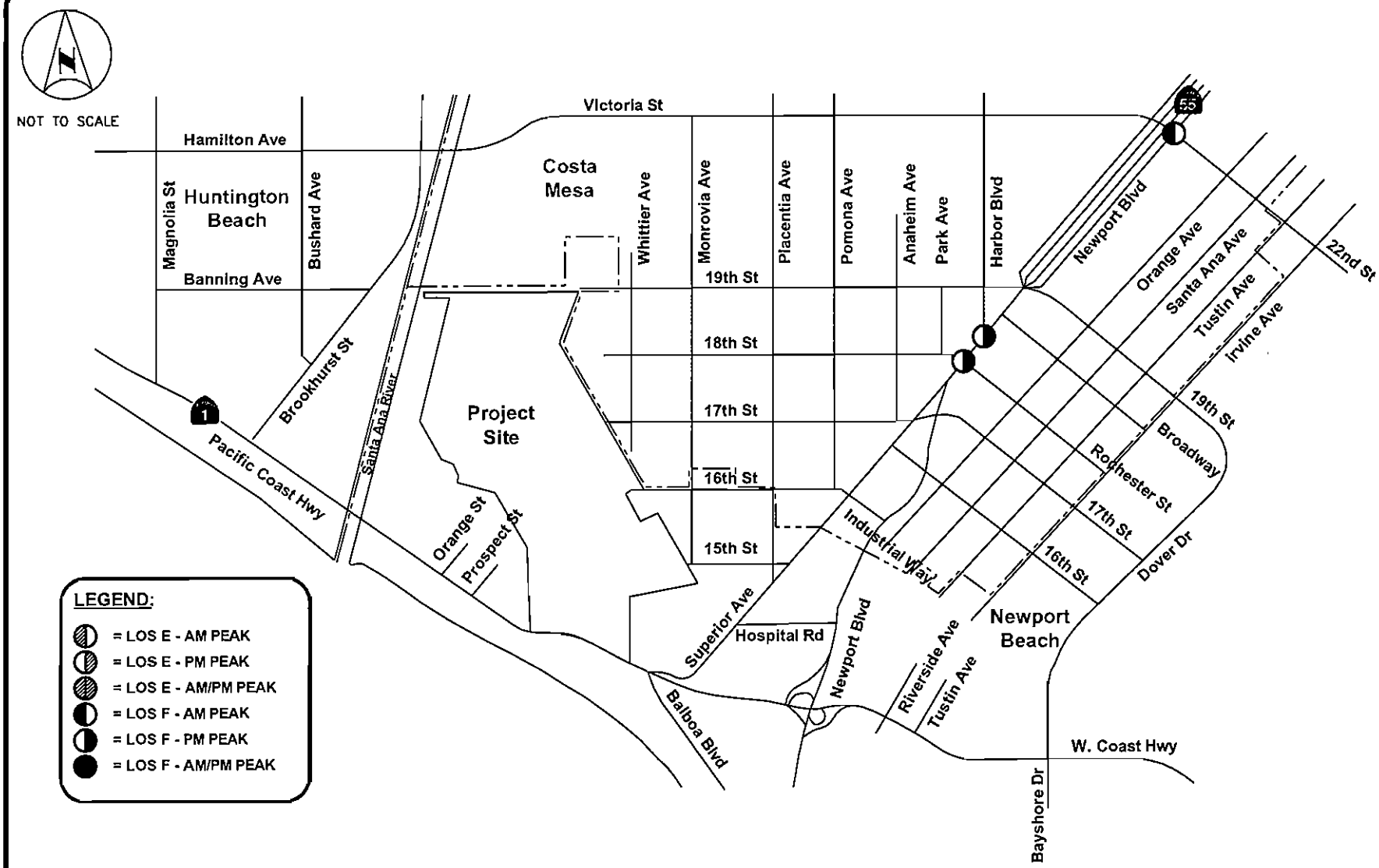

FIGURE 12
DEFICIENT INTERSECTIONS -
YEAR 2016 WITHOUT PROJECT - TPO ANALYSIS

FILENAME: Jun 30, 2011 – 5:31pm K:\ORA_TPTO\ZSAC\Projects\Banning Ranch\CAD\8th Submittal.dwg

Kimley-Horn and Associates, Inc.

Project Impact – TPO Analysis

The project's traffic-related impacts will be evaluated for the Year 2016 TPO (Existing plus Growth plus Committed) Conditions for three project scenarios:

- Proposed Project
- Project – Bluff Road Alternative, and
- Phase 1 of the project.

Year 2016 with Proposed Project – TPO Analysis

Under this scenario, project-related peak hour traffic volumes are added to the Year 2016 TPO (Existing plus Growth plus Committed) without Project traffic volumes, and Bluff Road is assumed to be constructed through the project site from West Coast Highway to 19th Street. **Table 9** summarizes the Year 2016 TPO with Project peak hour intersection operations. The following intersections would operate at an unacceptable level of service under Year 2016 TPO with Proposed Project Conditions:

Newport Beach Intersection (s):

- 9. Newport Boulevard at West Coast Highway (AM: LOS E)

Costa Mesa Intersection (s):

- 26. Newport Boulevard at Victoria Street/22nd Street (AM: LOS F)
- 28. Monrovia Avenue at 19th Street (AM: LOS E)
- 34. Newport Boulevard at 19th Street (AM: LOS E)
- 36. Newport Boulevard at Harbor Boulevard (PM: LOS F)
- 37. Newport Boulevard at 18th Street/Rochester Street (PM: LOS F)
- 42. Pomona Avenue at 17th Street (PM: LOS E)
- 43. Superior Avenue at 17th Street (PM: LOS E)
- 44. Newport Boulevard at 17th Street (PM: LOS E)

The deficient study intersections for this scenario are shown on **Figure 13.**

The project-related traffic would result in a significant impact at the following intersections:

Newport Beach Intersection (s):

- 9. Newport Boulevard at West Coast Highway (AM: LOS E – project impact 0.024)

Costa Mesa Intersection (s):

- 28. Monrovia Avenue at 19th Street (AM: LOS E – project impact, LOS E operations)
- 34. Newport Boulevard at 19th Street (AM: LOS E – project impact 0.51)
- 36. Newport Boulevard at Harbor Boulevard (PM: LOS F – project impact 0.079)
- 37. Newport Boulevard at 18th Street/Rochester Street (PM: LOS F – project impact 0.080).
- 42. Pomona Avenue at 17th Street (PM: LOS E – project impact, LOS E operations)
- 43. Superior Avenue at 17th Street (PM: LOS E – project impact 0.165)
- 44. Newport Boulevard at 17th Street (PM: LOS E – project impact 0.036)

Intersections 26, 36, and 37 were also identified as operating deficiently in the Year 2016 TPO without Project conditions.

TABLE 9
NEWPORT BANNING RANCH
SUMMARY OF INTERSECTION OPERATIONS
YEAR 2016 WITH PROPOSED PROJECT - TPO ANALYSIS

		Intersection	Control	Without Project				With Project				Project Impact			
				AM Peak Hour		PM Peak Hour		AM Peak Hour		PM Peak Hour		Change		Significant ?	
				ICU/ Delay	LOS	ICU/ Delay	LOS	ICU/ Delay	LOS	ICU/ Delay	LOS	AM	PM	AM	PM
Newport Beach	1	Monrovia Ave/16th St	U	8.8	A	8.2	A	10.5	B	10.2	B	1.7	2.0	No	No
	2	Placentia Ave/15th St	S	0.45	A	0.35	A	0.59	A	0.48	A	0.138	0.136	No	No
	3	Superior Ave/15th St	U	20.9	C	28.1	D	22.3	C	32.1	D	1.4	4.0	No	No
	4	Superior Ave/Placentia Ave	S	0.53	A	0.60	A	0.51	A	0.55	A	-0.014	-0.050	No	No
	5	Newport Blvd/Hospital Rd	S	0.53	A	0.64	B	0.53	A	0.64	B	0.000	0.000	No	No
	6	Orange St/W. Coast Hwy	S	0.79	C	0.72	C	0.80	C	0.75	C	0.012	0.028	No	No
	7	Prospect St/W. Coast Hwy	S	0.78	C	0.72	C	0.79	C	0.72	C	0.012	-0.002	No	No
	8	Superior Ave/W. Coast Hwy	S	0.70	B	0.70	B	0.71	C	0.65	B	0.014	-0.052	No	No
	9	Newport Blvd/W. Coast Hwy	S	0.90	D	0.70	B	0.93	E	0.73	C	0.024	0.024	*Yes*	No
	10	Riverside Ave/W. Coast Hwy	S	0.73	C	0.77	C	0.75	C	0.81	D	0.018	0.040	No	No
	11	Tustin Ave/W. Coast Hwy	S	0.73	C	0.64	B	0.75	C	0.68	B	0.017	0.038	No	No
	12	Dover Dr/W. Coast Hwy	S	0.69	B	0.78	C	0.69	B	0.80	C	0.008	0.013	No	No
Huntington Beach	13	Magnolia St/Hamilton Ave	S	0.57	A	0.57	A	0.59	A	0.59	A	0.020	0.023	No	No
	14	Bushard St/Hamilton Ave	S	0.45	A	0.56	A	0.45	A	0.57	A	0.003	0.008	No	No
	15	Brookhurst St/Hamilton Ave (Victoria St)	S	0.72	C	0.68	B	0.72	C	0.68	B	0.002	0.006	No	No
	16	Magnolia St/Banning Ave	S	0.25	A	0.30	A	0.27	A	0.31	A	0.017	0.011	No	No
	17	Bushard St/Banning Ave	U	10.2	B	9.2	A	10.2	B	9.2	A	0.0	0.0	No	No
	18	Brookhurst St/Banning Ave	S	0.27	A	0.25	A	0.27	A	0.26	A	0.004	0.012	No	No
	19	Magnolia St/Pacific Coast Hwy	S	0.52	A	0.63	B	0.52	A	0.63	B	0.008	0.006	No	No
	20	Brookhurst St/Bushard St	S	0.34	A	0.35	A	0.35	A	0.36	A	0.004	0.016	No	No
	21	Brookhurst St/Pacific Coast Hwy	S	0.61	B	0.71	C	0.62	B	0.74	C	0.014	0.032	No	No
Costa Mesa	22	Placentia Ave/Victoria St	S	0.80	C	0.85	D	0.80	C	0.86	D	0.005	0.016	No	No
	23	Pomona Ave/Victoria St	S	0.67	B	0.71	C	0.67	B	0.71	C	0.000	0.000	No	No
	24	Harbor Blvd/Victoria St	S	0.75	C	0.83	D	0.76	C	0.85	D	0.006	0.014	No	No
	25	Newport Blvd/Victoria St	S	0.59	A	0.48	A	0.59	A	0.48	A	0.000	0.000	No	No
	26	Newport Blvd/Victoria St (22nd St)	S	1.03	F	0.61	B	1.03	F	0.61	B	0.000	0.000	No	No
	27	Whittier Ave/19th St	U	10.3	B	9.2	A	11.1	B	10.1	B	0.8	0.9	No	No
	28	Monrovia Ave/19th St	U	19.9	C	14.0	B	36.4	E	20.2	C	16.5	6.2	*Yes*	No
	29	Placentia Ave/19th St	S	0.52	A	0.73	C	0.55	A	0.76	C	0.031	0.026	No	No
	30	Pomona Ave/19th St	S	0.50	A	0.61	B	0.53	A	0.64	B	0.030	0.026	No	No
	31	Anaheim Ave/19th St	S	0.50	A	0.58	A	0.53	A	0.61	B	0.030	0.023	No	No
	32	Park Ave/19th St	S	0.47	A	0.58	A	0.50	A	0.61	B	0.030	0.022	No	No

TABLE 9
NEWPORT BANNING RANCH
SUMMARY OF INTERSECTION OPERATIONS
YEAR 2016 WITH PROPOSED PROJECT - TPO ANALYSIS

		Intersection	Control	Without Project				With Project				Project Impact			
				AM Peak Hour		PM Peak Hour		AM Peak Hour		PM Peak Hour		Change		Significant ?	
				ICU/ Delay	LOS	ICU/ Delay	LOS	ICU/ Delay	LOS	ICU/ Delay	LOS	AM	PM	AM	PM
Costa Mesa	33	Harbor Blvd/19th St	S	0.43	A	0.60	A	0.45	A	0.65	B	0.020	0.044	No	No
	34	Newport Blvd/19th St	S	0.86	D	0.83	D	0.91	**E**	0.87	D	0.051	0.043	***Yes***	No
	35	Newport Blvd/Broadway	S	0.62	B	0.78	C	0.64	B	0.85	D	0.019	0.066	No	No
	36	Newport Blvd/Harbor Blvd	S	0.75	C	1.06	**F**	0.78	C	1.14	**F**	0.025	0.079	No	***Yes***
	37	Newport Blvd/18th St (Rochester St)	S	0.79	C	1.07	**F**	0.83	D	1.15	**F**	0.034	0.080	No	***Yes***
	38	Placentia Ave/18th St	S	0.47	A	0.50	A	0.47	A	0.54	A	0.002	0.041	No	No
	39	Whittier Ave/17th St	U	7.4	A	7.4	A	9.6	A	11.2	B	2.2	3.8	No	No
	40	Monrovia Ave/17th St	U	9.9	A	9.0	A	14.4	B	16.0	C	4.5	7.0	No	No
	41	Placentia Ave/17th St	S	0.44	A	0.56	A	0.46	A	0.69	B	0.024	0.133	No	No
	42	Pomona Ave/17th St	U	14.8	B	15.5	C	22.8	C	46.3	**E**	8.0	30.8	No	***Yes***
	43	Superior Ave/17th St	S	0.70	B	0.81	D	0.80	C	0.98	**E**	0.102	0.165	No	***Yes***
	44	Newport Blvd/17th St	S	0.80	C	0.88	D	0.85	D	0.91	**E**	0.051	0.036	No	***Yes***
	45	Orange Ave/17th St	S	0.44	A	0.66	B	0.47	A	0.69	B	0.024	0.033	No	No
	46	Santa Ana Ave/17th St	S	0.42	A	0.64	B	0.45	A	0.68	B	0.024	0.033	No	No
	47	Tustin Ave/17th St	S	0.51	A	0.70	B	0.54	A	0.73	C	0.025	0.033	No	No
	48	Irvine Ave/17th St	S	0.53	A	0.69	B	0.55	A	0.71	C	0.024	0.023	No	No
	49	Placentia Ave/16th St	S	0.34	A	0.32	A	0.35	A	0.41	A	0.010	0.088	No	No
	50	Superior Ave/16th St	S	0.52	A	0.49	A	0.59	A	0.62	B	0.070	0.121	No	No
	51	Newport Blvd/16th St	S	0.55	A	0.60	A	0.56	A	0.62	B	0.016	0.017	No	No
	52	Bluff Rd/Victoria St	S	Future Intersection				0.50	A	0.57	A	0.504	0.573	No	No
On-Site	53	Bluff Rd/19th St	S	Future Intersections				0.08	A	0.11	A	0.079	0.114	No	No
	54	Bluff Rd/17th St	S					0.13	A	0.21	A	0.129	0.207	No	No
	55	Bluff Rd/16th St	U					13.3	B	19.3	C	13.3	19.3	No	No
	56	Bluff Rd/15th St	S					0.19	A	0.29	A	0.188	0.291	No	No
	57	Bluff Rd/W. Coast Hwy	S					0.65	B	0.81	D	0.647	0.810	No	No
	58	Monrovia Ave/15th Street	U	7.5	A	7.4	A	9.3	A	9.3	A	1.8	1.9	No	No

Notes:
S = Signalized, U=Unsignalized
Bold and shaded values indicate intersections operating at LOS E or F.
Intersection operation is expressed in average seconds of delay per vehicle during the peak hour for unsignalized intersections using the HCM 2000 Methodology and is expressed in volume-to-capacity (v/c) for signalized intersections using the ICU Methodology.

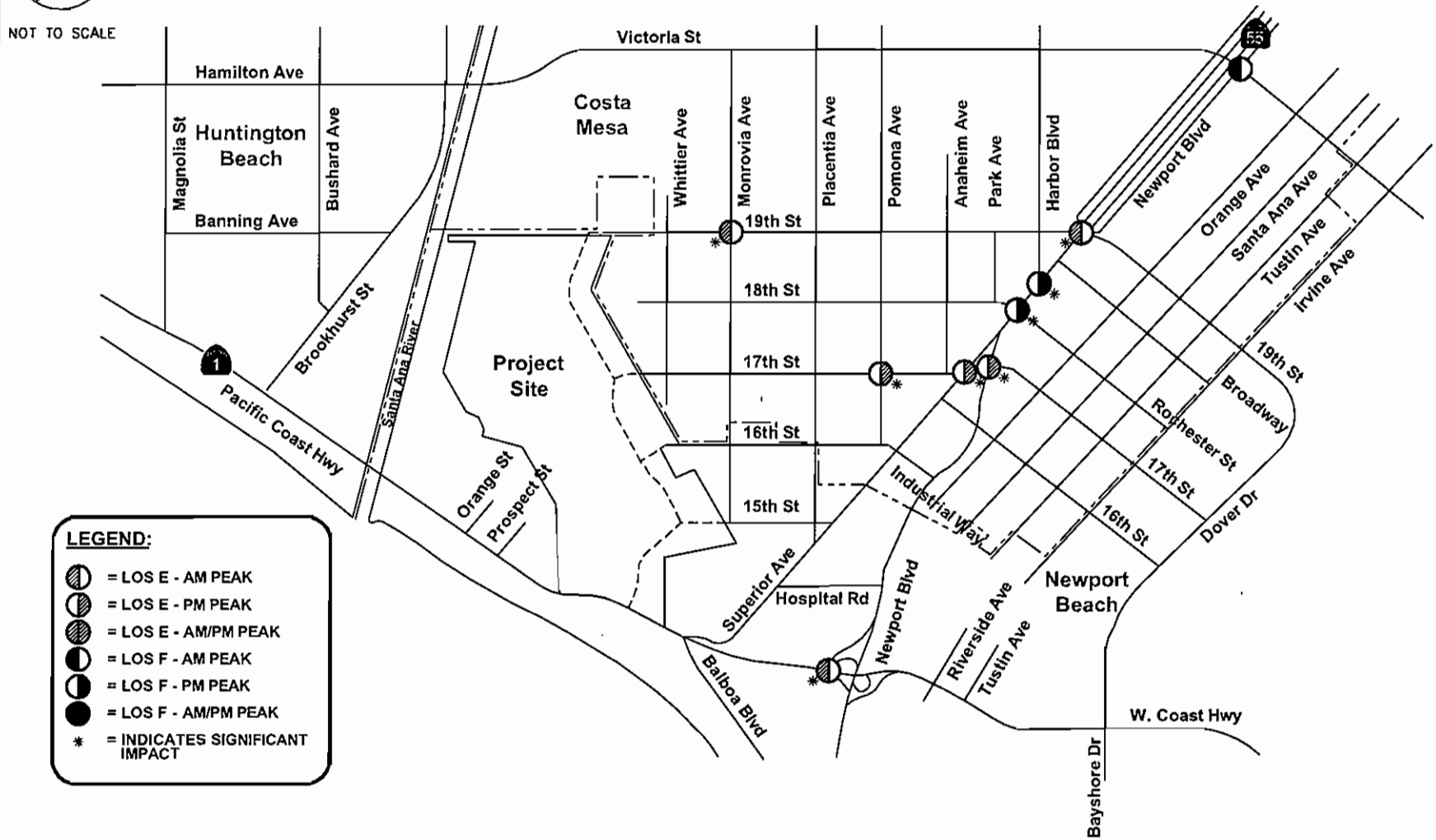

FIGURE 13
DEFICIENT INTERSECTIONS -
YEAR 2016 WITH PROPOSED PROJECT - TPO ANALYSIS

FILENAME: Jun 30, 2011 – 5:31pm K:\ORA_TPTO\ZSAC\Projects\Banning Ranch\CAD\61h Submittal.dwg

Kimley-Horn and Associates, Inc.

As previously noted, with the development of the project site, including Bluff Road and the proposed connections to the local east/west streets, some local traffic patterns are expected to shift off the existing street system near the project site, to take advantage of the new street connection to and from West Coast Highway, resulting in some minor improvement to some intersections primarily along Superior Avenue.

For significant project impacts identified under the TPO (Existing plus Growth plus Committed) analysis, this study will identify feasible improvements that could mitigate some or all of the impacts of the project. A discussion of mitigation measures is provided in the Mitigation Section of this report.

Year 2016 with Project – Bluff Road Alternative – TPO Analysis

Under this scenario, peak hour traffic volumes for the Project – Bluff Road Alternative are added to the Year 2016 TPO (Existing plus Growth plus Committed) without Project traffic volumes, and Bluff Road is assumed to be constructed only from West Coast Highway to the northerly development boundary, north of 17th Street. This is a project alternative which eliminates the Bluff Road connection between the northerly development boundary and 19th Street.

Table 10 summarizes Year 2016 TPO with Project – Bluff Road Alternative peak hour intersection operations. The following intersections would operate at an unacceptable level of service under Year 2016 TPO with Project Bluff Road Alternative Conditions:

Newport Beach Intersection (s):

- 9. Newport Boulevard at West Coast Highway (AM: LOS E)

Costa Mesa Intersection (s):

- 26. Newport Boulevard at Victoria Street/22nd Street (AM: LOS F)
- 36. Newport Boulevard at Harbor Boulevard (PM: LOS F)
- 37. Newport Boulevard at 18th Street/Rochester Street (PM: LOS F)
- 42. Pomona Avenue at 17th Street (PM: LOS F)
- 43. Superior Avenue at 17th Street (PM: LOS F)
- 44. Newport Boulevard at 17th Street (PM: LOS E)

Intersections 26, 36, and 37 were also identified as operating deficiently under existing conditions. The deficient study intersections for this scenario are shown on **Figure 14.** With the elimination of the segment of Bluff Road between 17th and 19th Street for the Bluff Road Alternative, some of the project traffic would distribute differently, and some of the project impact would shift from 19th to 17th Street. Comparing the two scenarios, the intersections along 17th Street would worsen from LOS E to LOS F as a result of the Bluff Road Alternative.

TABLE 10
NEWPORT BANNING RANCH
SUMMARY OF INTERSECTION OPERATIONS
YEAR 2016 WITH PROJECT - BLUFF ROAD ALTERNATIVE - TPO ANALYSIS

		Intersection	Control	Without Project				With Project Alternative				Project Impact			
				AM Peak Hour		PM Peak Hour		AM Peak Hour		PM Peak Hour		Change		Significant ?	
				ICU/ Delay	LOS	ICU/ Delay	LOS	ICU/ Delay	LOS	ICU/ Delay	LOS	AM	PM	AM	PM
Newport Beach	1	Monrovia Ave/16th St	U	8.8	A	8.2	A	10.9	B	10.5	B	2.1	2.3	No	No
	2	Placentia Ave/15th St	S	0.45	A	0.35	A	0.59	A	0.49	A	0.141	0.143	No	No
	3	Superior Ave/15th St	U	20.9	C	28.1	D	22.3	C	32.1	D	1.4	4.0	No	No
	4	Superior Ave/Placentia Ave	S	0.53	A	0.60	A	0.51	A	0.55	A	-0.014	-0.045	No	No
	5	Newport Blvd/Hospital Rd	S	0.53	A	0.64	B	0.53	A	0.64	B	0.000	0.000	No	No
	6	Orange St/W. Coast Hwy	S	0.79	C	0.72	C	0.80	C	0.75	C	0.012	0.028	No	No
	7	Prospect St/W. Coast Hwy	S	0.78	C	0.72	C	0.79	C	0.72	C	0.012	-0.002	No	No
	8	Superior Ave/W. Coast Hwy	S	0.70	B	0.70	B	0.71	C	0.65	B	0.012	-0.052	No	No
	9	Newport Blvd/W. Coast Hwy	S	0.90	D	0.70	B	0.93	E	0.73	C	0.022	0.021	*Yes*	No
	10	Riverside Ave/W. Coast Hwy	S	0.73	C	0.77	C	0.75	C	0.80	C	0.018	0.027	No	No
	11	Tustin Ave/W. Coast Hwy	S	0.73	C	0.64	B	0.75	C	0.68	B	0.018	0.040	No	No
	12	Dover Dr/W. Coast Hwy	S	0.69	B	0.78	C	0.69	B	0.80	C	0.008	0.013	No	No
Huntington Beach	13	Magnolia St/Hamilton Ave	S	0.57	A	0.57	A	0.59	A	0.60	A	0.020	0.024	No	No
	14	Bushard St/Hamilton Ave	S	0.45	A	0.56	A	0.45	A	0.57	A	0.003	0.009	No	No
	15	Brookhurst St/Hamilton Ave (Victoria St)	S	0.72	C	0.68	B	0.72	C	0.68	B	0.003	0.006	No	No
	16	Magnolia St/Banning Ave	S	0.25	A	0.30	A	0.26	A	0.31	A	0.016	0.010	No	No
	17	Bushard St/Banning Ave	U	10.2	B	9.2	A	10.2	B	9.2	A	0.0	0.0	No	No
	18	Brookhurst St/Banning Ave	S	0.27	A	0.25	A	0.27	A	0.26	A	0.005	0.012	No	No
	19	Magnolia St/Pacific Coast Hwy	S	0.52	A	0.63	B	0.52	A	0.63	B	0.008	0.006	No	No
	20	Brookhurst St/Bushard St	S	0.34	A	0.35	A	0.35	A	0.36	A	0.004	0.017	No	No
	21	Brookhurst St/Pacific Coast Hwy	S	0.61	B	0.71	C	0.62	B	0.74	C	0.014	0.032	No	No
Costa Mesa	22	Placentia Ave/Victoria St	S	0.80	C	0.85	D	0.80	C	0.86	D	0.005	0.016	No	No
	23	Pomona Ave/Victoria St	S	0.67	B	0.71	C	0.67	B	0.71	C	0.000	0.000	No	No
	24	Harbor Blvd/Victoria St	S	0.75	C	0.83	D	0.76	C	0.85	D	0.006	0.014	No	No
	25	Newport Blvd/Victoria St	S	0.59	A	0.48	A	0.59	A	0.48	A	0.000	0.000	No	No
	26	Newport Blvd/Victoria St (22nd St)	S	1.03	F	0.61	B	1.03	F	0.61	B	0.000	0.000	No	No
	27	Whittier Ave/19th St	U	10.3	B	9.2	A	10.3	B	9.2	A	0.0	0.0	No	No
	28	Monrovia Ave/19th St	U	19.9	C	14.0	B	19.9	C	14.0	B	0.0	0.0	No	No
	29	Placentia Ave/19th St	S	0.52	A	0.73	C	0.53	A	0.75	C	0.006	0.015	No	No
	30	Pomona Ave/19th St	S	0.50	A	0.61	B	0.50	A	0.61	B	0.004	0.003	No	No
	31	Anaheim Ave/19th St	S	0.50	A	0.58	A	0.51	A	0.59	A	0.004	0.003	No	No
	32	Park Ave/19th St	S	0.47	A	0.58	A	0.48	A	0.59	A	0.004	0.003	No	No

TABLE 10
NEWPORT BANNING RANCH
SUMMARY OF INTERSECTION OPERATIONS
YEAR 2016 WITH PROJECT - BLUFF ROAD ALTERNATIVE - TPO ANALYSIS

		Intersection	Control	Without Project				With Project Alternative				Project Impact			
				AM Peak Hour		PM Peak Hour		AM Peak Hour		PM Peak Hour		Change		Significant ?	
				ICU/ Delay	LOS	ICU/ Delay	LOS	ICU/ Delay	LOS	ICU/ Delay	LOS	AM	PM	AM	PM
Costa Mesa	33	Harbor Blvd/19th St	S	0.43	A	0.60	A	0.43	A	0.63	B	0.003	0.025	No	No
	34	Newport Blvd/19th St	S	0.86	D	0.83	D	0.90	D	0.87	D	0.047	0.041	No	No
	35	Newport Blvd/Broadway	S	0.62	B	0.78	C	0.64	B	0.87	D	0.023	0.081	No	No
	36	Newport Blvd/Harbor Blvd	S	0.75	C	1.06	**F**	0.78	C	1.16	**F**	0.030	0.099	No	***Yes***
	37	Newport Blvd/18th St (Rochester St)	S	0.79	C	1.07	**F**	0.84	D	1.17	**F**	0.045	0.100	No	***Yes***
	38	Placentia Ave/18th St	S	0.47	A	0.50	A	0.48	A	0.56	A	0.010	0.066	No	No
	39	Whittier Ave/17th St	U	7.4	A	7.4	A	10.3	B	12.4	B	2.9	5.0	No	No
	40	Monrovia Ave/17th St	U	9.9	A	9.0	A	14.9	B	17.3	C	5.0	8.3	No	No
	41	Placentia Ave/17th St	S	0.44	A	0.56	A	0.49	A	0.71	C	0.052	0.152	No	No
	42	Pomona Ave/17th St	U	14.8	B	15.5	C	25.1	D	51.3	**F**	10.3	35.8	No	***Yes***
	43	Superior Ave/17th St	S	0.70	B	0.81	D	0.82	D	1.01	**F**	0.122	0.196	No	***Yes***
	44	Newport Blvd/17th St	S	0.80	C	0.88	D	0.86	D	0.93	**E**	0.063	0.053	No	***Yes***
	45	Orange Ave/17th St	S	0.44	A	0.66	B	0.47	A	0.69	B	0.024	0.031	No	No
	46	Santa Ana Ave/17th St	S	0.42	A	0.64	B	0.45	A	0.67	B	0.024	0.030	No	No
	47	Tustin Ave/17th St	S	0.51	A	0.70	B	0.54	A	0.73	C	0.024	0.030	No	No
	48	Irvine Ave/17th St	S	0.53	A	0.69	B	0.55	A	0.71	C	0.023	0.021	No	No
	49	Placentia Ave/16th St	S	0.34	A	0.32	A	0.38	A	0.43	A	0.039	0.112	No	No
	50	Superior Ave/16th St	S	0.52	A	0.49	A	0.61	B	0.64	B	0.093	0.145	No	No
	51	Newport Blvd/16th St	S	0.55	A	0.60	A	0.56	A	0.62	B	0.016	0.018	No	No
	52	Bluff Rd/Victoria St	S	Future Intersection				Future Intersection				N/A		N/A	
On-Site	53	Bluff Rd/19th St	S	Future Intersections				Future Intersection				N/A		N/A	
	54	Bluff Rd/17th St	S					0.14	A	0.17	A	0.140	0.165	No	No
	55	Bluff Rd/16th St	U					14.6	B	19.6	C	14.6	19.6	No	No
	56	Bluff Rd/15th St	S					0.18	A	0.28	A	0.180	0.276	No	No
	57	Bluff Rd/W. Coast Hwy	S					0.65	B	0.81	D	0.648	0.805	No	No
	58	Monrovia Ave/15th Street	U	7.5	A	7.4	A	9.2	A	9.3	A	1.7	1.9	No	No

Notes:
S = Signalized, U=Unsignalized
Bold and shaded values indicate intersections operating at LOS E or F.
Intersection operation is expressed in average seconds of delay per vehicle during the peak hour for unsignalized intersections using the HCM 2000 Methodology and is expressed in volume-to-capacity (v/c) for signalized intersections using the ICU Methodology.

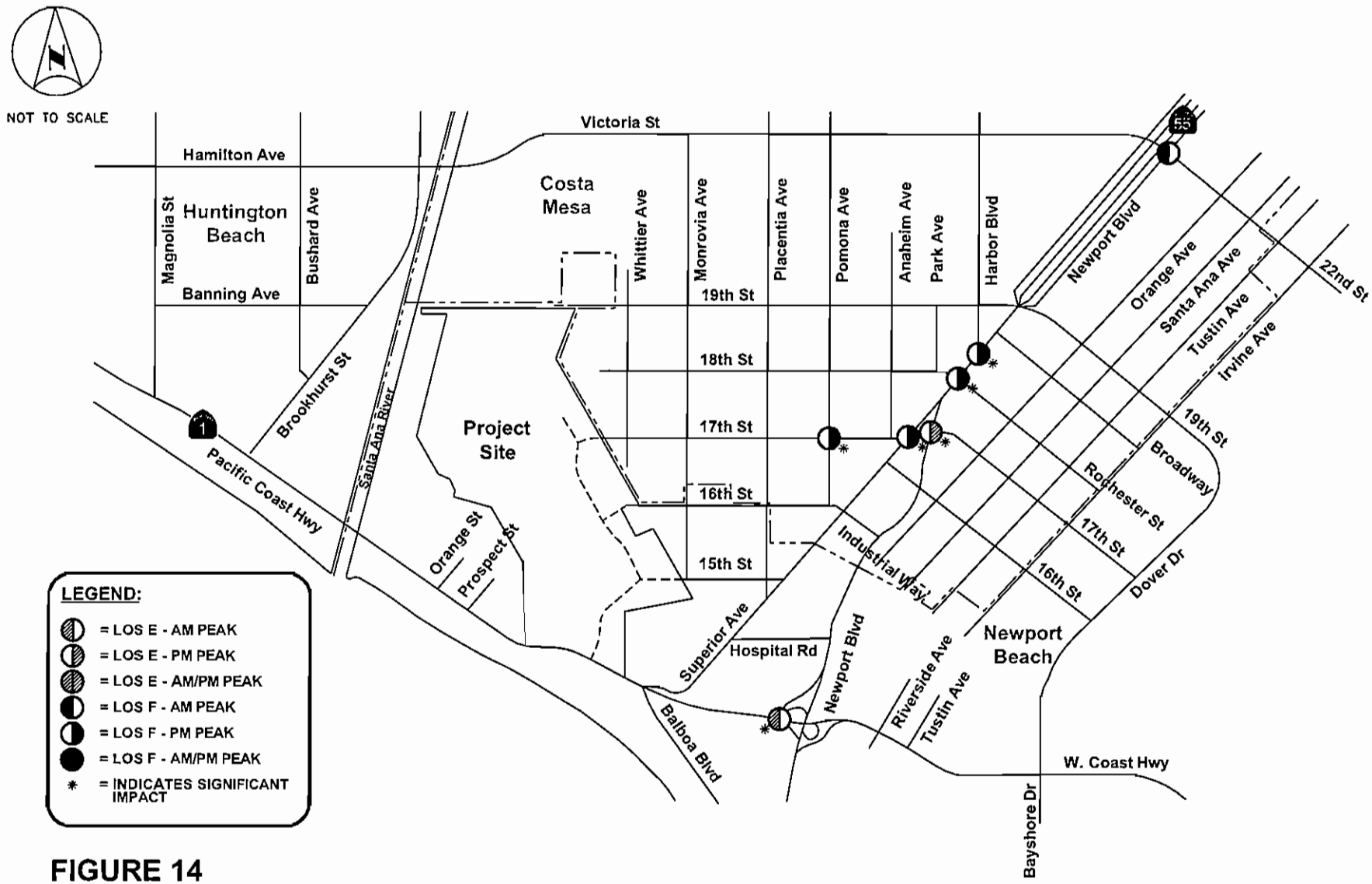

FIGURE 14
DEFICIENT INTERSECTIONS -
YEAR 2016 WITH PROJECT - BLUFF ROAD ALTERNATIVE - TPO ANALYSIS

FILENAME: Jun 30, 2011 - 5:32pm K:\ORA_TPTO\ZSAC\Projects\Banning Ranch\CAD\Bth Submittal.dwg

Kimley-Horn and Associates, Inc.

Project-related traffic would cause a significant impact at the following intersections:

Newport Beach Intersection (s):

- 9. Newport Boulevard at West Coast Highway (AM: LOS E – project impact 0.021)

Costa Mesa Intersection (s):

- 36. Newport Boulevard at Harbor Boulevard (PM: LOS F – project impact 0.099)
- 37. Newport Boulevard at 18th Street/Rochester Street (PM: LOS F – project impact 0.100)
- 42. Pomona Avenue at 17th Street (PM: LOS E – project impact, LOS E operations)
- 43. Superior Avenue at 17th Street (PM: LOS F – project impact 0.196)
- 44. Newport Boulevard at 17th Street (PM: LOS E – project impact 0.053)

Year 2016 with Phase 1 Project – TPO Analysis

Under this scenario, project-related peak hour traffic volumes for Phase 1 of the project are added to the Year 2016 TPO (Existing plus Growth plus Committed) without Project traffic volumes, and Bluff Road is assumed to be constructed only from West Coast Highway to 16th Street. The intersection analysis was conducted, and the results are summarized on **Table 11**. The following intersections would operate at an unacceptable level of service under Year 2016 TPO with Phase 1 Conditions:

Newport Beach Intersection (s):

- 9. Newport Boulevard at West Coast Highway (AM: LOS E)

Costa Mesa Intersection (s):

- 26. Newport Boulevard at Victoria Street/22nd Street (AM: LOS F)
- 36. Newport Boulevard at Harbor Boulevard (PM: LOS F)
- 37. Newport Boulevard at 18th Street/Rochester Street (PM: LOS F)

The deficient study intersections for this scenario are shown on **Figure 15**.

The addition of Phase 1 project-related traffic would result in a significant impact at the following intersections:

Newport Beach Intersection (s):

- 9. Newport Boulevard at West Coast Highway (AM: LOS E – project impact, LOS E operations)

Costa Mesa Intersection (s):

- 36. Newport Boulevard at Harbor Boulevard (PM: LOS F – project impact 0.012)
- 37. Newport Boulevard at 18th Street/Rochester Street (PM: LOS F – project impact 0.013).

The two Costa Mesa intersections were identified as operating deficiently in the existing condition.

A discussion of mitigation measures is provided in the Mitigation Section of this report.

TABLE 11
NEWPORT BANNING RANCH
SUMMARY OF INTERSECTION OPERATIONS
YEAR 2016 WITH PHASE I PROJECT - TPO ANALYSIS

		Intersection	Control	Without Project				With Phase I Project				Project Impact			
				AM Peak Hour		PM Peak Hour		AM Peak Hour		PM Peak Hour		Change		Significant ?	
				ICU/ Delay	LOS	ICU/ Delay	LOS	ICU/ Delay	LOS	ICU/ Delay	LOS	AM	PM	AM	PM
Newport Beach	1	Monrovia Ave/16th St	U	8.8	A	8.2	A	9.5	A	9.0	A	0.7	0.8	No	No
	2	Placentia Ave/15th St	S	0.45	A	0.35	A	0.44	A	0.33	A	-0.006	-0.017	No	No
	3	Superior Ave/15th St	U	20.9	C	28.1	D	20.5	C	27.4	D	-0.4	-0.7	No	No
	4	Superior Ave/Placentia Ave	S	0.53	A	0.60	A	0.52	A	0.55	A	-0.004	-0.050	No	No
	5	Newport Blvd/Hospital Rd	S	0.53	A	0.64	B	0.53	A	0.64	B	0.000	0.000	No	No
	6	Orange St/W. Coast Hwy	S	0.79	C	0.72	C	0.79	C	0.72	C	0.002	0.003	No	No
	7	Prospect St/W. Coast Hwy	S	0.78	C	0.72	C	0.78	C	0.73	C	0.002	0.003	No	No
	8	Superior Ave/W. Coast Hwy	S	0.70	B	0.70	B	0.70	B	0.69	B	0.003	-0.017	No	No
	9	Newport Blvd/W. Coast Hwy	S	0.90	D	0.70	B	0.91	E	0.71	C	0.005	0.003	*Yes*	No
	10	Riverside Ave/W. Coast Hwy	S	0.73	C	0.77	C	0.73	C	0.77	C	0.006	0.004	No	No
	11	Tustin Ave/W. Coast Hwy	S	0.73	C	0.64	B	0.74	C	0.66	B	0.004	0.013	No	No
	12	Dover Dr/W. Coast Hwy	S	0.69	B	0.78	C	0.69	B	0.79	C	0.001	0.002	No	No
Huntington Beach	13	Magnolia St/Hamilton Ave	S	0.57	A	0.57	A	0.57	A	0.57	A	0.003	0.001	No	No
	14	Bushard St/Hamilton Ave	S	0.45	A	0.56	A	0.45	A	0.56	A	0.000	0.000	No	No
	15	Brookhurst St/Hamilton Ave (Victoria St)	S	0.72	C	0.68	B	0.72	C	0.68	B	0.000	0.000	No	No
	16	Magnolia St/Banning Ave	S	0.25	A	0.30	A	0.25	A	0.30	A	0.003	0.002	No	No
	17	Bushard St/Banning Ave	U	10.2	B	9.2	A	10.2	B	9.2	A	0.0	0.0	No	No
	18	Brookhurst St/Banning Ave	S	0.27	A	0.25	A	0.27	A	0.25	A	0.000	0.001	No	No
	19	Magnolia St/Pacific Coast Hwy	S	0.52	A	0.63	B	0.52	A	0.63	B	0.001	0.000	No	No
	20	Brookhurst St/Bushard St	S	0.34	A	0.35	A	0.34	A	0.35	A	0.000	0.002	No	No
	21	Brookhurst St/Pacific Coast Hwy	S	0.61	B	0.71	C	0.61	B	0.71	C	0.002	0.002	No	No
Costa Mesa	22	Placentia Ave/Victoria St	S	0.80	C	0.85	D	0.80	C	0.85	D	0.001	0.002	No	No
	23	Pomona Ave/Victoria St	S	0.67	B	0.71	C	0.67	B	0.71	C	0.000	0.000	No	No
	24	Harbor Blvd/Victoria St	S	0.75	C	0.83	D	0.75	C	0.83	D	0.000	0.001	No	No
	25	Newport Blvd/Victoria St	S	0.59	A	0.48	A	0.59	A	0.48	A	0.000	0.000	No	No
	26	Newport Blvd/Victoria St (22nd St)	S	1.03	F	0.61	B	1.03	F	0.61	B	0.000	0.000	No	No
	27	Whittier Ave/19th St	U	10.3	B	9.2	A	10.3	B	9.2	A	0.0	0.0	No	No
	28	Monrovia Ave/19th St	U	19.9	C	14.0	B	19.9	C	14.0	B	0.0	0.0	No	No
	29	Placentia Ave/19th St	S	0.52	A	0.73	C	0.52	A	0.73	C	0.000	0.000	No	No
	30	Pomona Ave/19th St	S	0.50	A	0.61	B	0.50	A	0.61	B	0.000	0.000	No	No
	31	Anaheim Ave/19th St	S	0.50	A	0.58	A	0.50	A	0.58	A	0.000	0.000	No	No
	32	Park Ave/19th St	S	0.47	A	0.58	A	0.47	A	0.58	A	0.000	0.000	No	No

TABLE 11
NEWPORT BANNING RANCH
SUMMARY OF INTERSECTION OPERATIONS
YEAR 2016 WITH PHASE 1 PROJECT - TPO ANALYSIS

		Intersection	Control	Without Project				With Phase 1 Project				Project Impact			
				AM Peak Hour		PM Peak Hour		AM Peak Hour		PM Peak Hour		Change		Significant ?	
				ICU/ Delay	LOS	ICU/ Delay	LOS	ICU/ Delay	LOS	ICU/ Delay	LOS	AM	PM	AM	PM
Costa Mesa	33	Harbor Blvd/19th St	S	0.43	A	0.60	A	0.43	A	0.61	B	0.000	0.004	No	No
	34	Newport Blvd/19th St	S	0.86	D	0.83	D	0.86	D	0.84	D	0.007	0.004	No	No
	35	Newport Blvd/Broadway	S	0.62	B	0.78	C	0.62	B	0.79	C	0.002	0.010	No	No
	36	Newport Blvd/Harbor Blvd	S	0.75	C	1.06	**F**	0.76	C	1.07	**F**	0.003	0.012	No	***Yes***
	37	Newport Blvd/18th St (Rochester St)	S	0.79	C	1.07	**F**	0.80	C	1.09	**F**	0.004	0.013	No	***Yes***
	38	Placentia Ave/18th St	S	0.47	A	0.50	A	0.47	A	0.50	A	-0.002	-0.002	No	No
	39	Whittier Ave/17th St	U	7.4	A	7.4	A	7.4	A	7.4	A	0.0	0.0	No	No
	40	Monrovia Ave/17th St	U	9.9	A	9.0	A	10.1	B	9.1	A	0.2	0.1	No	No
	41	Placentia Ave/17th St	S	0.44	A	0.56	A	0.44	A	0.55	A	-0.002	-0.002	No	No
	42	Pomona Ave/17th St	U	14.8	B	15.5	C	14.8	B	15.5	C	0.0	0.0	No	No
	43	Superior Ave/17th St	S	0.70	B	0.81	D	0.70	B	0.82	D	0.003	0.005	No	No
	44	Newport Blvd/17th St	S	0.80	C	0.88	D	0.81	D	0.88	D	0.009	0.006	No	No
	45	Orange Ave/17th St	S	0.44	A	0.66	B	0.44	A	0.66	B	0.002	0.002	No	No
	46	Santa Ana Ave/17th St	S	0.42	A	0.64	B	0.43	A	0.65	B	0.002	0.002	No	No
	47	Tustin Ave/17th St	S	0.51	A	0.70	B	0.51	A	0.70	B	0.002	0.001	No	No
	48	Irvine Ave/17th St	S	0.53	A	0.69	B	0.53	A	0.69	B	0.002	0.001	No	No
	49	Placentia Ave/16th St	S	0.34	A	0.32	A	0.35	A	0.37	A	0.009	0.051	No	No
	50	Superior Ave/16th St	S	0.52	A	0.49	A	0.54	A	0.54	A	0.028	0.045	No	No
	51	Newport Blvd/16th St	S	0.55	A	0.60	A	0.56	A	0.61	B	0.012	0.013	No	No
	52	Bluff Rd/Victoria St	S	Future Interseetion				Future Intersection				N/A		N/A	
On-Site	53	Bluff Rd/19th St	S	Future Intersections				Future Intersection				N/A		N/A	
	54	Bluff Rd/17th St	S												
	55	Bluff Rd/16th St	U												
	56	Bluff Rd/15th St	S					0.06	A	0.06	A	0.057	0.058	No	No
	57	Bluff Rd/W. Coast Hwy	S					0.63	B	0.66	B	0.633	0.656	No	No
	58	Monrovia Ave/15th Street	U	7.5	A	7.4	A	7.5	A	7.4	A	0.0	0.0	No	No

Notes:
S = Signalized, U=Unsignalized
Bold and shaded values indicate intersections operating at LOS E or F.
Intersection operation is expressed in average seconds of delay per vehicle during the peak hour for unsignalized intersections using the HCM 2000 Methodology and is expressed in volume-to-capacity (v/c) for signalized intersections using the ICU Methodology.

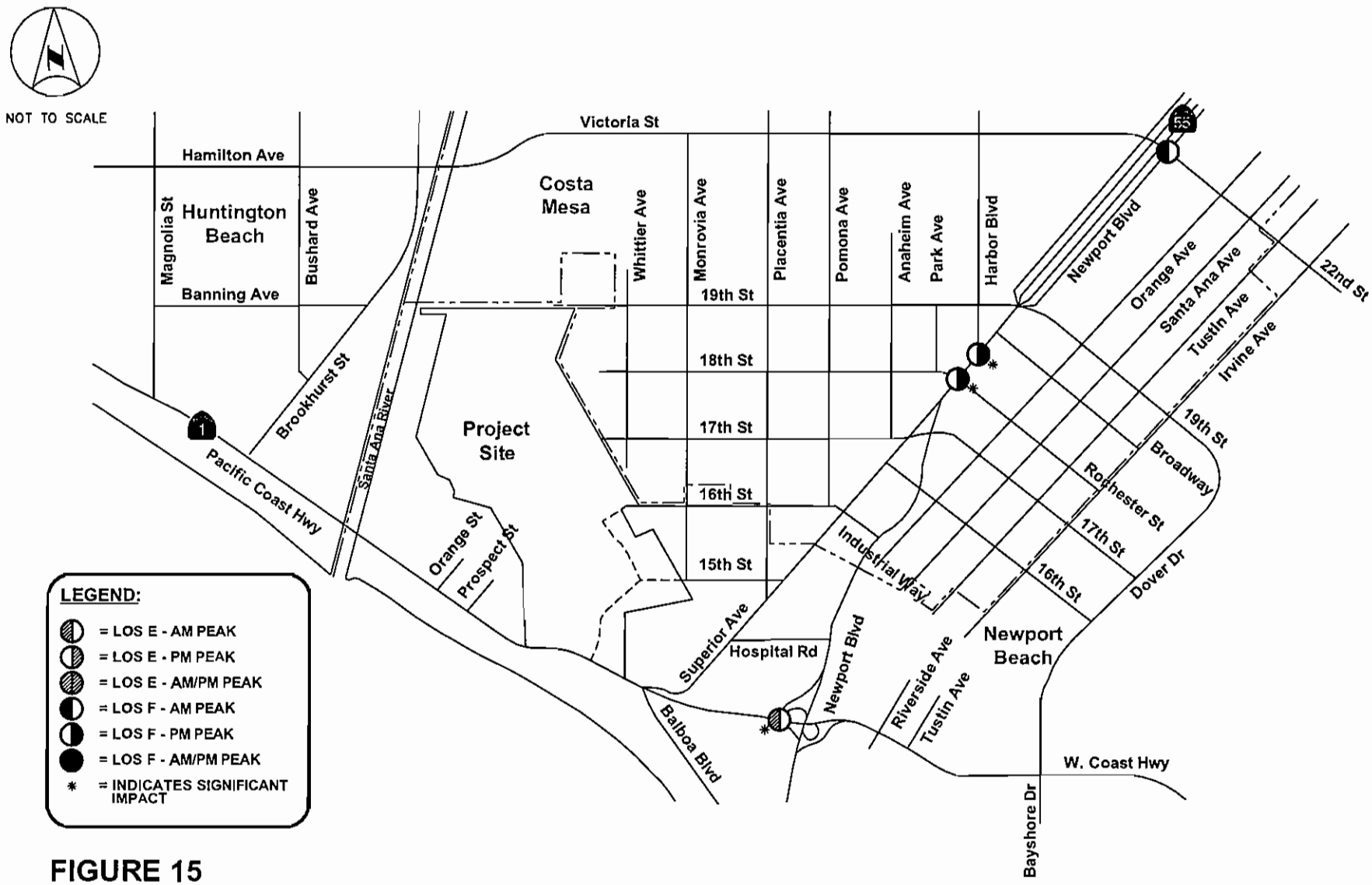

FIGURE 15
DEFICIENT INTERSECTIONS -
YEAR 2016 WITH PHASE 1 PROJECT - TPO ANALYSIS

FILENAME: Jun 30, 2011 - 5:32pm K:\ORA_TPTD\ZSAC\Projects\Banning Ranch\CAD\8th Submittal.dwg

Kimley-Horn and Associates, Inc.

Year 2016 Cumulative Conditions Analysis

The California Environmental Quality Act (CEQA) requires that a Cumulative Conditions analysis, which includes traffic from reasonably foreseeable projects in the vicinity of the project, be conducted. Reasonably foreseeable projects consist of approved projects, as well as projects that are in various stages of the application and approval process, but have not yet been approved. These projects are considered to be "reasonably foreseeable," and must therefore be analyzed for CEQA purposes.

Cumulative Project information was obtained from the cities of Newport Beach, Huntington Beach, and Costa Mesa at the start of the study process. A summary of Cumulative Projects included in the Cumulative Conditions analysis is provided on **Table 12.** The location of the Cumulative Projects in relation to the project site is shown on **Figure 16.**

Trip generation estimates for each of the Cumulative Projects were developed based on approved traffic studies, if available, and on the Institute of Transportation Engineers (ITE) publication Trip Generation, 8th Edition. Trip generation estimates are summarized in **Table 13.** Traffic data sheets for each Cumulative Project are provided in ***Appendix D.***

Traffic from the Cumulative Projects was added to the peak hour forecasts that were developed for the Year 2016 TPO Analysis (Existing plus Growth plus Committed Projects), to develop Year 2016 Cumulative Conditions without Project traffic forecasts, and the study intersections were reanalyzed.

Year 2016 Cumulative Conditions without Project

Table 14 summarizes Year 2016 Cumulative Conditions without Project intersection operations. In addition to the intersections forecasted to operate at an unacceptable Level of Service under Existing Conditions, the intersection of Newport Boulevard at West Coast Highway (Int. #9) is forecasted to worsen to LOS E in the morning peak hour with the addition of Cumulative Projects traffic. The following intersections are forecasted to operate below acceptable standards under Year 2016 Cumulative Conditions without Project:

Newport Beach Intersection (s):

- 9. Newport Boulevard at West Coast Highway (AM: LOS E)

Costa Mesa Intersection (s):

- 26. Newport Boulevard at Victoria Street/22nd Street (AM: LOS F)
- 36. Newport Boulevard at Harbor Boulevard (PM: LOS F)
- 37. Newport Boulevard at 18th Street/Rochester Street (PM: LOS F)

With the exception of Intersection 9, all other intersections were also identified as deficient under existing conditions. The deficient study intersections for this scenario are shown on **Figure 17.** All other study intersections would operate at an acceptable level of service (LOS D or better) in both peak hours. Cumulative Conditions analysis worksheets are provided in ***Appendix G.***

TABLE 12
SUMMARY OF CUMULATIVE PROJECTS

Project No.	Project Name	Location	Existing Site Development	Proposed Project Description
City of Newport Beach				
1	Mariner's Medical Arts	1901 Westcliff Drive	N/A	12,245 GSF Medical Office Addition
2	City Hall and Park Development	1100 Avocado Avenue	N/A	98,000 SF Government Office Complex 17,135 SF Library 15-Acre Park
3	WPI-Newport, LLC	4699 Jamboree Road/ 5190 Campus Drive	10,800 GSF Office 10,221 GSF Drive-in Bank	43,951 GSF Office 5,744 GSF Drive-in Bank 2,214 GSF Specialty Retail Center 2,263 GSF Quality Restaurant
4	Sunset Ridge Park	4850 W. Coast Highway	N/A	13.67 Active Park 2 Fields Soccer Complex
5	Old Newport GPA	328-340 Old Newport Boulevard	10,000 SF Office 3,012 SF Medical Offiee 1 DU Apartment	25,725 GSF Medical Office
6	Marina Park	1700 Balboa Boulevard	57 DU Mobile Home Park 1.2 Acre Park 2,900 GSF Recreational Community Center	4.89 Acre Park 21,300 GSF Recreational Community Center 23-Berth Marina
7	PRES Office Building B	4300 Von Karman	N/A	16,742 GSF Office
8	Koll-Conexant	4311 Jamboree Road	167,000 Office 269,000 General Light Industrial	974 DU Apartment
9	Coastline Community College	1505-1533 Monrovia Avenue	3,600 GSF Warehousing 10,000 GSF General Light Industrial 19,574 GSF Office	67,000 GSF Higher Education Learning Center
10	Newport Coast	Newport Coast Drive	2,807 Acre State Park	3,180 DU Single-Family Detached Resdential[1] 1,298 DU Condominium/Townhouse[1] 582 DU Multi-Family DU[1]
City of Huntington Beach				
11	Magnolia Pacific Specific Plan	Southwest Corner of Hamilton and Magnolia	N/A	296 DU Single-Family Detaehed Residential 206 DU Condominium/Townhouse
12	Banning Branch Library	9281 Banning Avenue	2,400 SF Library	12,500 SF Library
13	City of Huntington Beach Downtown Specific Plan	Downtown Huntington Beach	N/A	398,583 SF Mixed-Use Development 235-Room Hotel 648 DU Condominium/Townhouse 150-Seat Cultural Center with 20 KSF Museum
14	Pacific City	PCH and 1st	N/A	208,000 SF Mixed-Use Development 250-Room Hotel 514 DU Residential
15	Waterfront - 3rd Hotel	PCH west of Beach Blvd	N/A	250-Room Hotel
16	Newland Residential	Newland and Hamilton	N/A	201 DU Single-Family Residential
17	Mixed-Use Project	PCH and 7th	N/A	4,260 SF Retail 6 DU Residential

TABLE 12
SUMMARY OF CUMULATIVE PROJECTS

City of Costa Mesa				
18	Stones Throw on Victoria	372-382 Victoria Street	N/A	30 DU Single-Family Detached Residential
19	Industrial 18	1036/1042 W. 18th Street	2 DU Single-Family Detached Residential	34 DU Single-Family Detached Residential
20	Westside Lofts	1640 Monrovia Avenue	126,200 SF Light Industrial	42,000 SF General Office Building 156 DU Apartment
21	C2/Mixed Use	709 Randolph Avenue	3,750 SF General Light Industrial	3,750 SF Specialty Retail Center 5 DU Apartment
22	C2/Mixed Use	765 Saint Clair Street	1,120 SF General Office Building	4 DU Apartment
23	C2&MG/Mixed-Use	763-769 Baker Street	35,380 SF General Light Industrial	20,000 SF Specialty Retail Center 70 DU Apartment
24	C1/Mixed-Use	845 Baker Street	11,545 SF General Light Industrial	31 DU Apartment
25	C1/Mixed-Use	1695 Superior Avenue	2,300 SF General Office Building	10,000 SF Specialty Retail Center 26 DU Apartment
26	MG/Mixed-Use	1945 Placentia Avenue	81,566 SF General Light Industrial	218 DU Apartment
27	MG/Mixed-Use	1716/1720 Whittier Avenue	2 DU Apartment 2,500 SF General Light Industrial	6 DU Apartment
28	R2H/Ownership Overlay	2033-2037 Anaheim Ave	8 DU Condominium/Townhouse	9 DU Condominium/Townhouse
29	R2H/Ownership Overlay	616 Center Street	3 DU Single-Family Detached Residential	7 DU Single-Family Detached Residential
30	R2H/Ownership Overlay	2068 & 2070 Maple Avenue	1 DU Single-Family Detached Residential 1,850 GSF Day Care Center	7 DU Single-Family Detached Residential
31	PDC	1870 Harbor Boulevard	185,500 SF Shopping Center	107,000 SF Shopping Center 120 DU Condominium/Townhouse
32	I&R	2501 Harbor Boulevard	N/A	170 DU Apartment
33	C1/Mixed-Use	695 W. 19th Street	N/A	150 DU Condominium/Townhouse
34	PDC	511 Hamilton Street	5,007 SF General Office Building	14 DU Apartments 5,007 SF General Office Building

DU = Dwelling Units, GSF = Gross Square Feet, SF = Square Feet
[1] Assumes 70% Occupied

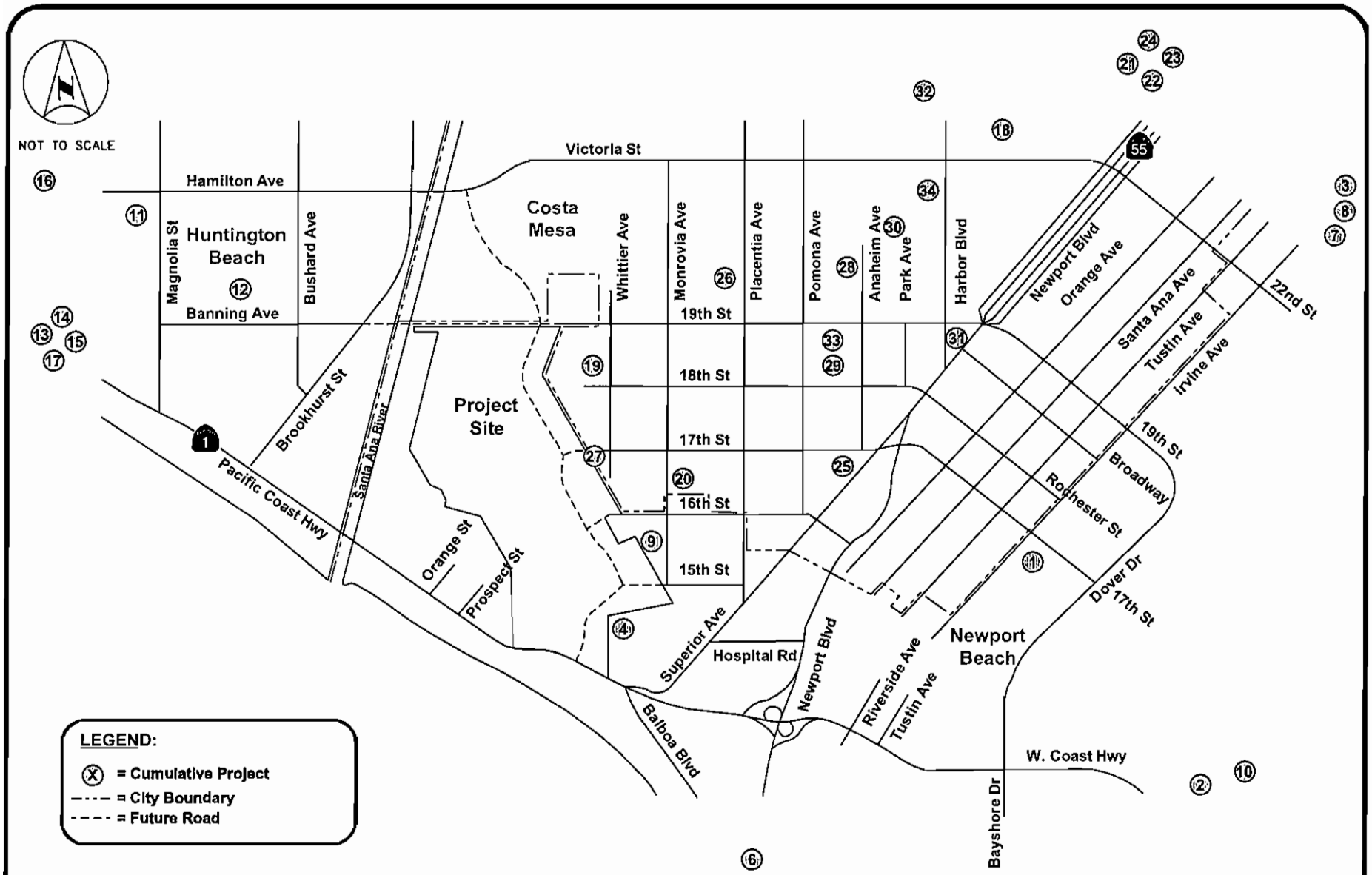

FIGURE 16
LOCATION OF CUMULATIVE PROJECTS

FILENAME: Jun 30, 2011 - 5:35pm K:\ORA_TPTO\ZSAC\Projects\Banning Ranch\CAD\8th Submittal.dwg

Kimley-Horn and Associates, Inc.

TABLE 13
SUMMARY OF CUMULATIVE PROJECTS TRIP GENERATION

Project No.	Net Increase Trip Generation Estimates [1]						
		AM Peak Hour			PM Peak Hour		
	Daily	In	Out	Total	In	Out	Total
City of Newport Beach							
1	442	22	6	28	11	31	42
2	3,070	188	55	243	129	223	352
3	3	17	-17	0	-36	-8	-44
4	165	1	1	2	29	13	42
5	704	28	9	37	18	45	63
6	352	15	0	15	7	19	26
7	184	23	3	26	4	21	25
8	2,764	-348	338	-10	316	-221	95
9	1,544	112	47	159	92	38	130
10 [2]	14,778	272	932	1,204	926	557	1,482
Total [1]	**24,006**	**678**	**1,391**	**1,714**	**1,532**	**947**	**2,257**
City of Huntington Beach							
11	4,030	71	242	313	260	146	406
12	568	7	3	10	36	38	74
13	13,397	291	275	566	451	475	926
14	12,002	345	283	628	505	546	1,051
15	2,043	85	55	140	78	70	148
16	1,976	38	113	151	127	74	201
17	220	3	4	7	10	9	19
Total	**34,236**	**840**	**975**	**1,815**	**1,467**	**1,358**	**2,825**
City of Costa Mesa							
18	287	6	17	23	19	11	30
19	306	6	18	24	20	12	32
20	1,405	72	66	138	67	83	150
21	173	-2	2	0	6	4	10
22	15	-2	2	0	2	0	2
23	1,105	-22	25	3	48	15	63
24	79	-13	11	-2	9	-7	2
25	587	0	10	10	22	18	40
26	881	-44	80	36	79	-23	56
27	10	-1	1	0	1	-1	0
28	6	0	0	0	0	1	1
29	38	1	2	3	3	1	4
30	-90	-11	-8	-19	-8	-9	-17
31	-2,354	-28	20	-8	-103	-130	-233
32	1,313	17	69	86	69	37	106
33	872	11	55	66	52	26	78
34	93	1	6	7	6	3	9
Total [1]	**7,170**	**114**	**384**	**396**	**403**	**211**	**583**

Source: Institute of Transportation Engineers publication "Trip Generation", 8th Edition unless otherwise noted

[1] Negative trips are not assigned to the circulation system, thus they do not reflect in the trip total at the bottom of the table.

[2] Source: City of Newport Beach Trip Generation Rates

TABLE 14
NEWPORT BANNING RANCH
SUMMARY OF INTERSECTION OPERATIONS
YEAR 2016 CUMULATIVE CONDITIONS WITHOUT PROJECT

		Intersection	Control	Without Project			
				AM Peak Hour		PM Peak Hour	
				ICU/ Delay	LOS	ICU/ Delay	LOS
Newport Beach	1	Monrovia Ave/16th St	U	9.6	A	8.6	A
	2	Placentia Ave/15th St	S	0.49	A	0.38	A
	3	Superior Ave/15th St	U	21.0	C	28.8	D
	4	Superior Ave/Placentia Ave	S	0.54	A	0.66	B
	5	Newport Blvd/Hospital Rd	S	0.54	A	0.65	B
	6	Orange St/W. Coast Hwy	S	0.81	D	0.76	C
	7	Prospect St/W. Coast Hwy	S	0.80	C	0.76	C
	8	Superior Ave/W. Coast Hwy	S	0.72	C	0.74	C
	9	Newport Blvd/W. Coast Hwy	S	0.94	E	0.76	C
	10	Riverside Ave/W. Coast Hwy	S	0.77	C	0.82	D
	11	Tustin Ave/W. Coast Hwy	S	0.77	C	0.68	B
	12	Dover Dr/W. Coast Hwy	S	0.72	C	0.85	D
Huntington Beach	13	Magnolia St/Hamilton Ave	S	0.65	B	0.64	B
	14	Bushard St/Hamilton Ave	S	0.47	A	0.59	A
	15	Brookhurst St/Hamilton Ave (Victoria St)	S	0.73	C	0.71	C
	16	Magnolia St/Banning Ave	S	0.26	A	0.33	A
	17	Bushard St/Banning Ave	U	10.3	B	9.4	A
	18	Brookhurst St/Banning Ave	S	0.27	A	0.26	A
	19	Magnolia St/Pacific Coast Hwy	S	0.54	A	0.69	B
	20	Brookhurst St/Bushard St	S	0.35	A	0.36	A
	21	Brookhurst St/Pacific Coast Hwy	S	0.63	B	0.75	C
Costa Mesa	22	Placentia Ave/Victoria St	S	0.86	D	0.86	D
	23	Pomona Ave/Victoria St	S	0.71	C	0.76	C
	24	Harbor Blvd/Victoria St	S	0.79	C	0.88	D
	25	Newport Blvd/Victoria St	S	0.62	B	0.51	A
	26	Newport Blvd/Victoria St (22nd St)	S	1.10	F	0.65	B
	27	Whittier Ave/19th St	U	10.3	B	9.2	A
	28	Monrovia Ave/19th St	U	21.1	C	14.5	B
	29	Placentia Ave/19th St	S	0.54	A	0.76	C
	30	Pomona Ave/19th St	S	0.51	A	0.63	B
	31	Anaheim Ave/19th St	S	0.51	A	0.59	A
	32	Park Ave/19th St	S	0.48	A	0.59	A
	33	Harbor Blvd/19th St	S	0.44	A	0.63	B
	34	Newport Blvd/19th St	S	0.86	D	0.84	D
	35	Newport Blvd/Broadway	S	0.63	B	0.80	C
	36	Newport Blvd/Harbor Blvd	S	0.76	C	1.07	F
	37	Newport Blvd/18th St (Rochester St)	S	0.80	C	1.08	F
	38	Placentia Ave/18th St	S	0.52	A	0.54	A
	39	Whittier Ave/17th St	U	7.4	A	7.4	A
	40	Monrovia Ave/17th St	U	11.1	B	9.9	A
	41	Placentia Ave/17th St	S	0.50	A	0.60	A
	42	Pomona Ave/17th St	U	15.3	C	16.6	C
	43	Superior Ave/17th St	S	0.70	B	0.82	D
	44	Newport Blvd/17th St	S	0.80	C	0.88	D
	45	Orange Ave/17th St	S	0.45	A	0.66	B
	46	Santa Ana Ave/17th St	S	0.43	A	0.65	B
	47	Tustin Ave/17th St	S	0.52	A	0.71	C
	48	Irvine Ave/17th St	S	0.56	A	0.71	C
	49	Placentia Ave/16th St	S	0.39	A	0.35	A
	50	Superior Ave/16th St	S	0.52	A	0.51	A
	51	Newport Blvd/16th St	S	0.55	A	0.60	A
	52	Bluff Rd/Victoria St	Future Intersection				

TABLE 14
NEWPORT BANNING RANCH
SUMMARY OF INTERSECTION OPERATIONS
YEAR 2016 CUMULATIVE CONDITIONS WITHOUT PROJECT

		Intersection	Control	Without Project			
				AM Peak Hour		PM Peak Hour	
				ICU/ Delay	LOS	ICU/ Delay	LOS
On-Site	53	Bluff Rd/19th St	Future Intersections				
	54	Bluff Rd/17th St					
	55	Bluff Rd/16th St					
	56	Bluff Rd/15th St					
	57	Bluff Rd/W. Coast Hwy					
	58	Monrovia Ave/15th Street	U	7.7	A	7.5	A

Notes:
S = Signalized, U=Unsignalized
Bold and shaded values indicate intersections operating at LOS E or F.
Intersection operation is expressed in average seconds of delay per vehicle during the peak hour for unsignalized intersections using the HCM 2000 Methodology and is expressed in volume-to-capacity (v/c) for signalized intersections using the ICU Methodology.

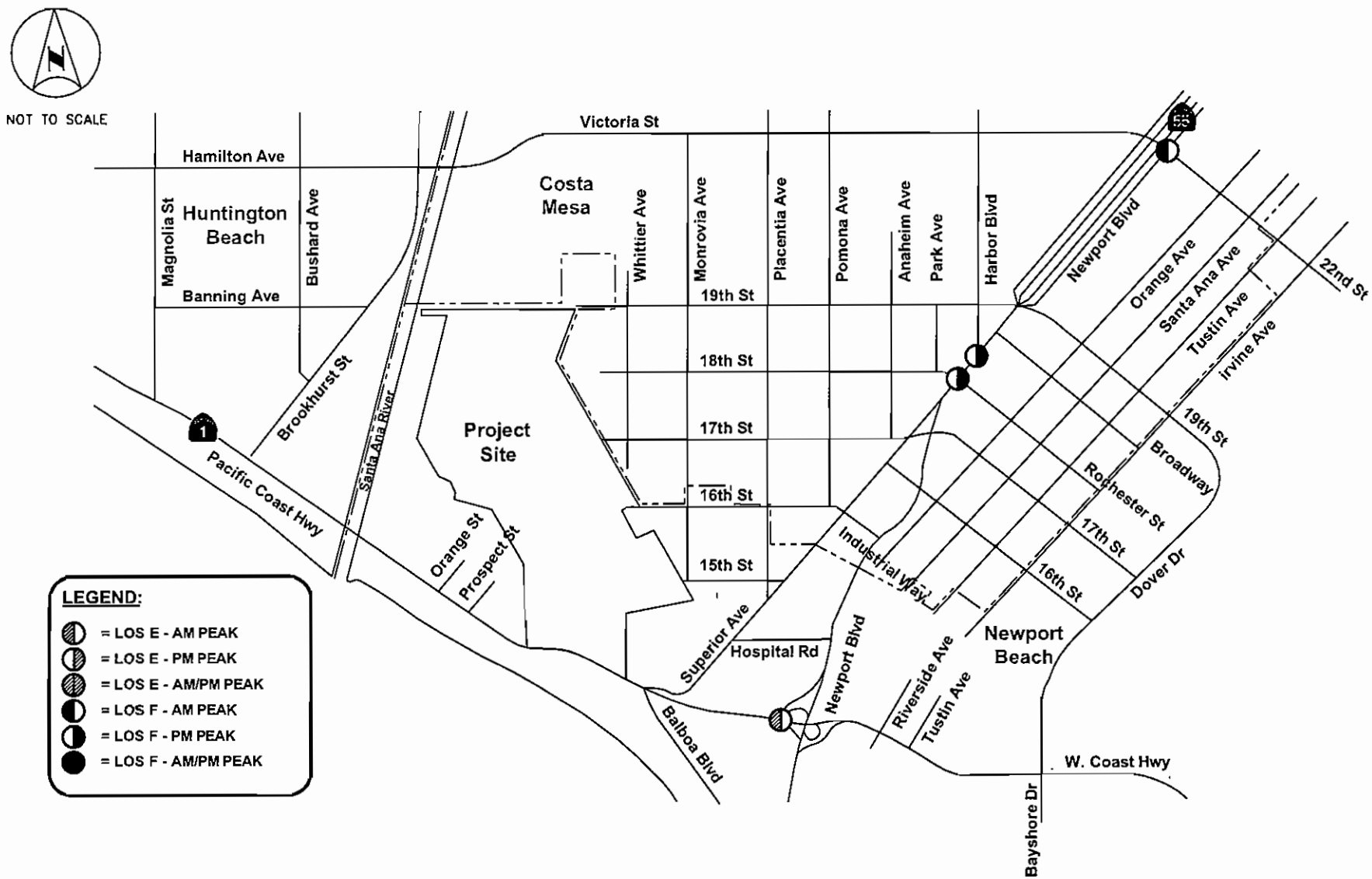

FIGURE 17
DEFICIENT INTERSECTIONS -
YEAR 2016 CUMULATIVE CONDITIONS WITHOUT PROJECT

FILENAME: Jun 30, 2011 - 5:35pm K:\ORA_TPTO\ZSAC\Projects\Banning Ranch\CAD\5th Submittal.dwg

Kimley-Horn and Associates, Inc.

Year 2016 Cumulative Conditions with Proposed Project

Under this scenario, project-related peak hour traffic volumes are added to the Year 2016 Cumulative without Project traffic volumes and Bluff Road is assumed to be constructed through the project site from West Coast Highway to 19th Street, with connections to 15th, 16th, and 17th Streets. **Table 15** summarizes the Year 2016 Cumulative with Proposed Project peak hour intersection operations.

The following intersections would operate at an unacceptable level of service under Year 2016 Cumulative Conditions with Project:

Newport Beach Intersection (s):

- 9. Newport Boulevard at West Coast Highway (AM: LOS E)

Costa Mesa Intersection (s):

- 26. Newport Boulevard at Victoria Street/22nd Street (AM: LOS F)
- 28. Monrovia Avenue at 19th Street (AM: LOS E)
- 34. Newport Boulevard at 19th Street (PM: LOS E)
- 36. Newport Boulevard at Harbor Boulevard (PM: LOS F)
- 37. Newport Boulevard at 18th Street/Rochester Street (PM: LOS F)
- 42. Pomona Avenue at 17th Street (PM: LOS F)
- 43. Superior Avenue at 17th Street (PM: LOS E)
- 44. Newport Boulevard at 17th Street (PM: LOS E)

The deficient study intersections for this scenario are shown on **Figure 18**.

The project-related traffic would result in a significant impact at the following intersections:

Newport Beach Intersection (s):

- 9. Newport Boulevard at West Coast Highway (AM: LOS E – project impact 0.024)

Costa Mesa Intersection (s):

- 28. Monrovia Avenue at 19th Street (PM: LOS E – project impact, LOS E operations)
- 34. Newport Boulevard at 19th Street (PM: LOS E – project impact 0.050)
- 36. Newport Boulevard at Harbor Boulevard (PM: LOS F – project impact 0.080)
- 37. Newport Boulevard at 18th Street/Rochester Street (PM: LOS F – project impact 0.080)
- 42. Pomona Avenue at 17th Street (PM: LOS E – project impact, LOS E operations)
- 43. Superior Avenue at 17th Street (PM: LOS F – project impact 0.165)
- 44. Newport Boulevard at 17th Street (PM: LOS E – project impact 0.039)

In addition to the intersections forecasted to operate at an unacceptable level of service in 2016 with the Project per the TPO analysis, the intersection of Monrovia Ave at 19th Street is forecasted to worsen to LOS E with the addition of the project traffic. For significant project impacts identified under the Cumulative Conditions analysis, this study will identify feasible improvements that could mitigate some or all of the impacts of the project. A discussion of mitigation measures is provided in the Mitigation Section of this report.

TABLE 15
NEWPORT BANNING RANCH
SUMMARY OF INTERSECTION OPERATIONS
YEAR 2016 CUMULATIVE CONDITIONS WITH PROPOSED PROJECT

		Intersection	Control	Without Project				With Project				Project Impact			
				AM Peak Hour		PM Peak Hour		AM Peak Hour		PM Peak Hour		Change		Significant ?	
				ICU/ Delay	LOS	ICU/ Delay	LOS	ICU/ Delay	LOS	ICU/ Delay	LOS	AM	PM	AM	PM
Newport Beach	1	Monrovia Ave/16th St	U	9.6	A	8.6	A	11.7	B	11.2	B	2.1	2.6	No	No
	2	Placentia Ave/15th St	S	0.49	A	0.38	A	0.63	B	0.52	A	0.138	0.135	No	No
	3	Superior Ave/15th St	U	21.0	C	28.8	D	22.5	C	33.0	D	1.5	4.2	No	No
	4	Superior Ave/Placentia Ave	S	0.54	A	0.66	B	0.51	A	0.59	A	-0.027	-0.067	No	No
	5	Newport Blvd/Hospital Rd	S	0.54	A	0.65	B	0.54	A	0.65	B	0.000	0.000	No	No
	6	Orange St/W. Coast Hwy	S	0.81	D	0.76	C	0.83	D	0.78	C	0.012	0.027	No	No
	7	Prospect St/W. Coast Hwy	S	0.80	C	0.76	C	0.81	D	0.76	C	0.012	-0.002	No	No
	8	Superior Ave/W. Coast Hwy	S	0.72	C	0.74	C	0.73	C	0.69	B	0.014	-0.047	No	No
	9	Newport Blvd/W. Coast Hwy	S	0.94	E	0.76	C	0.96	E	0.79	C	0.024	0.024	*Yes*	No
	10	Riverside Ave/W. Coast Hwy	S	0.77	C	0.82	D	0.79	C	0.85	D	0.018	0.039	No	No
	11	Tustin Ave/W. Coast Hwy	S	0.77	C	0.68	B	0.79	C	0.72	C	0.017	0.039	No	No
	12	Dover Dr/W. Coast Hwy	S	0.72	C	0.85	D	0.73	C	0.86	D	0.009	0.013	No	No
Huntington Beach	13	Magnolia St/Hamilton Ave	S	0.65	B	0.64	B	0.67	B	0.66	B	0.020	0.022	No	No
	14	Bushard St/Hamilton Ave	S	0.47	A	0.59	A	0.48	A	0.60	A	0.003	0.008	No	No
	15	Brookhurst St/Hamilton Ave (Victoria St)	S	0.73	C	0.71	C	0.73	C	0.72	C	0.002	0.006	No	No
	16	Magnolia St/Banning Ave	S	0.26	A	0.33	A	0.27	A	0.34	A	0.016	0.012	No	No
	17	Bushard St/Banning Ave	U	10.3	B	9.4	A	10.3	B	9.4	A	0.0	0.0	No	No
	18	Brookhurst St/Banning Ave	S	0.27	A	0.26	A	0.28	A	0.27	A	0.005	0.011	No	No
	19	Magnolia St/Pacific Coast Hwy	S	0.54	A	0.69	B	0.55	A	0.70	B	0.003	0.007	No	No
	20	Brookhurst St/Bushard St	S	0.35	A	0.36	A	0.35	A	0.37	A	0.005	0.016	No	No
	21	Brookhurst St/Pacific Coast Hwy	S	0.63	B	0.75	C	0.65	B	0.78	C	0.014	0.031	No	No
Costa Mesa	22	Placentia Ave/Victoria St	S	0.86	D	0.86	D	0.86	D	0.88	D	0.005	0.016	No	No
	23	Pomona Ave/Victoria St	S	0.71	C	0.76	C	0.71	C	0.76	C	0.000	0.000	No	No
	24	Harbor Blvd/Victoria St	S	0.79	C	0.88	D	0.80	C	0.90	D	0.006	0.013	No	No
	25	Newport Blvd/Victoria St	S	0.62	B	0.51	A	0.62	B	0.51	A	0.000	0.000	No	No
	26	Newport Blvd/Victoria St (22nd St)	S	1.10	F	0.65	B	1.10	F	0.65	B	0.000	0.000	No	No
	27	Whittier Ave/19th St	U	10.3	B	9.2	A	11.1	B	10.1	B	0.8	0.9	No	No
	28	Monrovia Ave/19th St	U	21.1	C	14.5	B	39.2	E	21.2	C	18.1	6.7	*Yes*	No
	29	Placentia Ave/19th St	S	0.54	A	0.76	C	0.58	A	0.79	C	0.039	0.027	No	No
	30	Pomona Ave/19th St	S	0.51	A	0.63	B	0.54	A	0.65	B	0.030	0.025	No	No
	31	Anaheim Ave/19th St	S	0.51	A	0.59	A	0.54	A	0.61	B	0.030	0.023	No	No
	32	Park Ave/19th St	S	0.48	A	0.59	A	0.51	A	0.61	B	0.030	0.022	No	No

TABLE 15
NEWPORT BANNING RANCH
SUMMARY OF INTERSECTION OPERATIONS
YEAR 2016 CUMULATIVE CONDITIONS WITH PROPOSED PROJECT

		Intersection	Control	Without Project				With Project				Project Impact			
				AM Peak Hour		PM Peak Hour		AM Peak Hour		PM Peak Hour		Change		Significant ?	
				ICU/ Delay	LOS	ICU/ Delay	LOS	ICU/ Delay	LOS	ICU/ Delay	LOS	AM	PM	AM	PM
Costa Mesa	33	Harbor Blvd/19th St	S	0.44	A	0.63	B	0.46	A	0.67	B	0.020	0.044	No	No
	34	Newport Blvd/19th St	S	0.86	D	0.84	D	0.91	**E**	0.88	D	0.050	0.042	*Yes*	No
	35	Newport Blvd/Broadway	S	0.63	B	0.80	C	0.65	B	0.86	D	0.019	0.066	No	No
	36	Newport Blvd/Harbor Blvd	S	0.76	C	1.07	**F**	0.78	C	1.15	**F**	0.025	0.080	No	*Yes*
	37	Newport Blvd/18th St (Rochester St)	S	0.80	C	1.08	**F**	0.83	D	1.16	**F**	0.034	0.080	No	*Yes*
	38	Placentia Ave/18th St	S	0.52	A	0.54	A	0.52	A	0.58	A	0.001	0.040	No	No
	39	Whittier Ave/17th St	U	7.4	A	7.4	A	9.6	A	11.2	B	2.2	3.8	No	No
	40	Monrovia Ave/17th St	U	11.1	B	9.9	A	17.9	C	21.7	C	6.8	11.8	No	No
	41	Placentia Ave/17th St	S	0.50	A	0.60	A	0.53	A	0.74	C	0.033	0.133	No	No
	42	Pomona Ave/17th St	U	15.3	C	16.6	C	24.6	C	53.3	**F**	9.3	36.7	No	*Yes*
	43	Superior Ave/17th St	S	0.70	B	0.82	D	0.81	D	0.98	**E**	0.103	0.165	No	*Yes*
	44	Newport Blvd/17th St	S	0.80	C	0.88	D	0.85	D	0.92	**E**	0.048	0.039	No	*Yes*
	45	Orange Ave/17th St	S	0.45	A	0.66	B	0.47	A	0.69	B	0.024	0.033	No	No
	46	Santa Ana Ave/17th St	S	0.43	A	0.65	B	0.45	A	0.68	B	0.024	0.033	No	No
	47	Tustin Ave/17th St	S	0.52	A	0.71	C	0.54	A	0.74	C	0.025	0.033	No	No
	48	Irvine Ave/17th St	S	0.56	A	0.71	C	0.58	A	0.73	C	0.024	0.022	No	No
	49	Placentia Ave/16th St	S	0.39	A	0.35	A	0.41	A	0.44	A	0.012	0.089	No	No
	50	Superior Ave/16th St	S	0.52	A	0.51	A	0.59	A	0.63	B	0.063	0.120	No	No
	51	Newport Blvd/16th St	S	0.55	A	0.60	A	0.57	A	0.62	B	0.016	0.017	No	No
	52	Bluff Rd/Victoria St	S	Future Intersection				0.51	A	0.58	A	0.511	0.582	No	No
On-Site	53	Bluff Rd/19th St	S	Future Intersections				0.08	A	0.11	A	0.079	0.114	No	No
	54	Bluff Rd/17th St	S					0.13	A	0.21	A	0.129	0.207	No	No
	55	Bluff Rd/16th St	U					13.3	B	19.3	C	13.3	19.3	No	No
	56	Bluff Rd/15th St	S					0.19	A	0.29	A	0.188	0.291	No	No
	57	Bluff Rd/W. Coast Hwy	S					0.67	B	0.84	D	0.670	0.844	No	No
	58	Monrovia Ave/15th Street	U	7.7	A	7.5	A	9.6	A	9.8	A	1.9	2.3	No	No

Notes:
S = Signalized, U=Unsignalized
Bold and shaded values indicate intersections operating at LOS E or F.
Intersection operation is expressed in average seconds of delay per vehicle during the peak hour for unsignalized intersections using the HCM 2000 Methodology and is expressed in volume-to-capacity (v/c) for signalized intersections using the ICU Methodology.

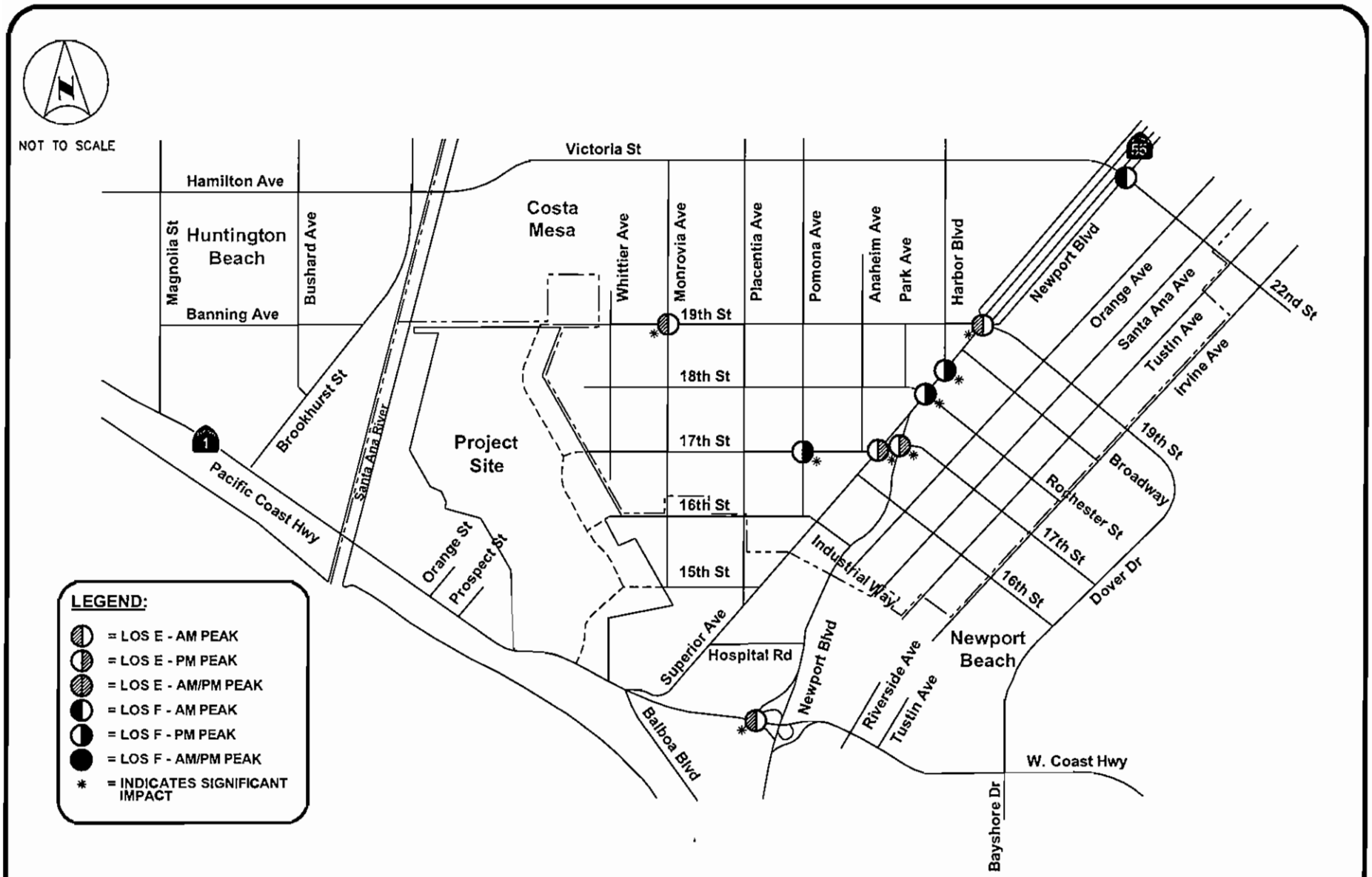

FIGURE 18
DEFICIENT INTERSECTIONS -
YEAR 2016 CUMULATIVE CONDITIONS WITH PROPOSED PROJECT

FILENAME: Jun 30, 2011 - 5:35pm K:\ORA_TPTO\ZSAC\Projects\Banning Ranch\CAD\8th Submittal.dwg

Kimley-Horn and Associates, Inc.

Signal Warrants

The City of Costa Mesa has requested that signal warrants be conducted for any unsignalized intersection operating at LOS D or worse with the project, to determine if the forecasted conditions would satisfy signal warrant criteria. Two unsignalized intersections in the City of Costa Mesa are forecasted to operate at LOS D or worse under this scenario:

- 28. Monrovia Avenue at 19th Street (AM: LOS D)
- 42. Pomona Avenue at 17th Street (PM: LOS D)

Traffic signal warrant analysis is used to determine whether or not the volume of traffic on a side street is great enough to warrant signalizing the intersection, in order to facilitate the movement of side street traffic to and from the major street. The warrant analysis is based on the 2003 Manual of Uniform Traffic Control Devices (M.U.T.C.D.) California Supplement Warrant 3 (Peak Hour Warrant).

The results of the signal warrant analysis are presented on **Table 16**. Based on the results of the signal warrant analysis, the forecasted traffic volumes at each of these intersections would satisfy signal warrant criteria for Warrant 3, and would operate at an acceptable Level of Service when signalized. Signal warrant analysis worksheets are provided in ***Appendix H***.

Year 2016 Cumulative Conditions with Project – Bluff Road Alternative

Under this scenario, project-related peak hour traffic volumes are added to the Year 2016 Cumulative Conditions without Project traffic volumes and Bluff Road is assumed to be constructed from West Coast Highway to the northerly project development limits, north of 17th Street. This is a project alternative, which eliminates the Bluff Road connection between the project limits and 19th Street.

Table 17 summarizes Year 2016 Cumulative Conditions with Project – Bluff Road Alternative intersection operations. The deficient study intersections for this scenario are shown on **Figure 19**. The following intersections would operate at an unacceptable level of service under Year 2016 Cumulative Conditions with Project – Bluff Road Alternative:

Newport Beach Intersection (s):

- 9. Newport Boulevard at West Coast Highway (AM: LOS E)

Costa Mesa Intersection (s):

- 26. Newport Boulevard at Victoria Street/22nd Street (AM: LOS F)
- 34. Newport Boulevard at 19th Street (AM: LOS E)
- 36. Newport Boulevard at Harbor Boulevard (PM: LOS F)
- 37. Newport Boulevard at 18th Street/Rochester Street (PM: LOS F)
- 42. Pomona Avenue at 17th Street (PM: LOS F)
- 43. Superior Avenue at 17th Street (PM: LOS F)
- 44. Newport Boulevard at 17th Street (PM: LOS E)

TABLE 16
SUMMARY OF SIGNAL WARRANT ANALYSIS

Factor	Peak Hour Warrant			
	AM Peak		PM Peak	
	Major Street	Minor Street	Major Street	Minor Street
Minimum Peak Hour Volume [1]	500	150	500	150
Intersection:				
Monrovia Avenue and 19th Street	1,033	218	950	304
- Minimum Requirement Met?	YES	YES	YES	YES
- Warrant Satisfied?	YES		YES	
Pomona Avenue and 17th Street	991	295	1,251	219
- Minimum Requirement Met?	YES	YES	YES	YES
- Warrant Satisfied?	YES		YES	

[1] Based on Peak Hour Warrant - Figure 4C-3 of the MUTCD

TABLE 17
NEWPORT BANNING RANCH
SUMMARY OF INTERSECTION OPERATIONS
YEAR 2016 CUMULATIVE CONDITIONS WITH PROJECT - BLUFF ROAD ALTERNATIVE

		Intersection	Control	Without Project				With Project Alternative				Project Impact			
				AM Peak Hour		PM Peak Hour		AM Peak Hour		PM Peak Hour		Change		Significant ?	
				ICU/ Delay	LOS	ICU/ Delay	LOS	ICU/ Delay	LOS	ICU/ Delay	LOS	AM	PM	AM	PM
Newport Beach	1	Monrovia Ave/16th St	U	9.6	A	8.6	A	12.1	B	11.6	B	2.5	3.0	No	No
	2	Placentia Ave/15th St	S	0.49	A	0.38	A	0.64	B	0.53	A	0.141	0.143	No	No
	3	Superior Ave/15th St	U	21.0	C	28.8	D	22.5	C	33.1	D	1.5	4.3	No	No
	4	Superior Ave/Placentia Ave	S	0.54	A	0.66	B	0.51	A	0.60	A	-0.027	-0.062	No	No
	5	Newport Blvd/Hospital Rd	S	0.54	A	0.65	B	0.54	A	0.65	B	0.000	0.000	No	No
	6	Orange St/W. Coast Hwy	S	0.81	D	0.76	C	0.83	D	0.78	C	0.012	0.027	No	No
	7	Prospect St/W. Coast Hwy	S	0.80	C	0.76	C	0.81	D	0.76	C	0.012	-0.002	No	No
	8	Superior Ave/W. Coast Hwy	S	0.72	C	0.74	C	0.73	C	0.69	B	0.013	-0.047	No	No
	9	Newport Blvd/W. Coast Hwy	S	0.94	E	0.76	C	0.96	E	0.79	C	0.022	0.022	*Yes*	No
	10	Riverside Ave/W. Coast Hwy	S	0.77	C	0.82	D	0.79	C	0.84	D	0.018	0.027	No	No
	11	Tustin Ave/W. Coast Hwy	S	0.77	C	0.68	B	0.79	C	0.72	C	0.017	0.041	No	No
	12	Dover Dr/W. Coast Hwy	S	0.72	C	0.85	D	0.73	C	0.86	D	0.009	0.013	No	No
Huntington Beach	13	Magnolia St/Hamilton Ave	S	0.65	B	0.64	B	0.67	B	0.66	B	0.020	0.023	No	No
	14	Bushard St/Hamilton Ave	S	0.47	A	0.59	A	0.48	A	0.60	A	0.003	0.009	No	No
	15	Brookhurst St/Hamilton Ave (Victoria St)	S	0.73	C	0.71	C	0.73	C	0.72	C	0.003	0.006	No	No
	16	Magnolia St/Banning Ave	S	0.26	A	0.33	A	0.27	A	0.34	A	0.015	0.011	No	No
	17	Bushard St/Banning Ave	U	10.3	B	9.4	A	10.3	B	9.4	A	0.0	0.0	No	No
	18	Brookhurst St/Banning Ave	S	0.27	A	0.26	A	0.28	A	0.27	A	0.005	0.012	No	No
	19	Magnolia St/Pacific Coast Hwy	S	0.54	A	0.69	B	0.55	A	0.70	B	0.003	0.007	No	No
	20	Brookhurst St/Bushard St	S	0.35	A	0.36	A	0.35	A	0.37	A	0.005	0.017	No	No
	21	Brookhurst St/Pacific Coast Hwy	S	0.63	B	0.75	C	0.65	B	0.78	C	0.014	0.032	No	No
Costa Mesa	22	Placentia Ave/Victoria St	S	0.86	D	0.86	D	0.86	D	0.88	D	0.005	0.016	No	No
	23	Pomona Ave/Victoria St	S	0.71	C	0.76	C	0.71	C	0.76	C	0.000	0.000	No	No
	24	Harbor Blvd/Victoria St	S	0.79	C	0.88	D	0.80	C	0.90	D	0.006	0.013	No	No
	25	Newport Blvd/Victoria St	S	0.62	B	0.51	A	0.62	B	0.51	A	0.000	0.000	No	No
	26	Newport Blvd/Victoria St (22nd St)	S	1.10	F	0.65	B	1.10	F	0.65	B	0.000	0.000	No	No
	27	Whittier Ave/19th St	U	10.3	B	9.2	A	10.3	B	9.2	A	0.0	0.0	No	No
	28	Monrovia Ave/19th St	U	21.1	C	14.5	B	21.1	C	14.5	B	0.0	0.0	No	No
	29	Placentia Ave/19th St	S	0.54	A	0.76	C	0.55	A	0.78	C	0.013	0.016	No	No
	30	Pomona Ave/19th St	S	0.51	A	0.63	B	0.51	A	0.63	B	0.004	0.003	No	No
	31	Anaheim Ave/19th St	S	0.51	A	0.59	A	0.52	A	0.59	A	0.004	0.003	No	No
	32	Park Ave/19th St	S	0.48	A	0.59	A	0.49	A	0.59	A	0.004	0.003	No	No

TABLE 17
NEWPORT BANNING RANCH
SUMMARY OF INTERSECTION OPERATIONS
YEAR 2016 CUMULATIVE CONDITIONS WITH PROJECT - BLUFF ROAD ALTERNATIVE

		Intersection	Control	Without Project				With Project Alternative				Project Impact			
				AM Peak Hour		PM Peak Hour		AM Peak Hour		PM Peak Hour		Change		Significant ?	
				ICU/ Delay	LOS	ICU/ Delay	LOS	ICU/ Delay	LOS	ICU/ Delay	LOS	AM	PM	AM	PM
Costa Mesa	33	Harbor Blvd/19th St	S	0.44	A	0.63	B	0.44	A	0.64	B	0.003	0.013	No	No
	34	Newport Blvd/19th St	S	0.86	D	0.84	D	0.91	**E**	0.88	D	0.047	0.040	*Yes*	No
	35	Newport Blvd/Broadway	S	0.63	B	0.80	C	0.65	B	0.88	D	0.023	0.081	No	No
	36	Newport Blvd/Harbor Blvd	S	0.76	C	1.07	**F**	0.79	C	1.17	**F**	0.031	0.100	No	*Yes*
	37	Newport Blvd/18th St (Rochester St)	S	0.80	C	1.08	**F**	0.85	D	1.18	**F**	0.045	0.100	No	*Yes*
	38	Placentia Ave/18th St	S	0.52	A	0.54	A	0.53	A	0.60	A	0.010	0.066	No	No
	39	Whittier Ave/17th St	U	7.4	A	7.4	A	10.3	B	12.4	B	2.9	5.0	No	No
	40	Monrovia Ave/17th St	U	11.1	B	9.9	A	18.8	C	24.8	C	7.7	14.9	No	No
	41	Placentia Ave/17th St	S	0.50	A	0.60	A	0.55	A	0.75	C	0.052	0.152	No	No
	42	Pomona Ave/17th St	U	15.3	C	16.6	C	27.2	D	58.4	**F**	11.9	41.8	No	*Yes*
	43	Superior Ave/17th St	S	0.70	B	0.82	D	0.83	D	1.02	**F**	0.123	0.196	No	*Yes*
	44	Newport Blvd/17th St	S	0.80	C	0.88	D	0.86	D	0.93	**E**	0.060	0.045	No	*Yes*
	45	Orange Ave/17th St	S	0.45	A	0.66	B	0.47	A	0.69	B	0.024	0.031	No	No
	46	Santa Ana Ave/17th St	S	0.43	A	0.65	B	0.45	A	0.68	B	0.024	0.030	No	No
	47	Tustin Ave/17th St	S	0.52	A	0.71	C	0.54	A	0.74	C	0.024	0.031	No	No
	48	Irvine Ave/17th St	S	0.56	A	0.71	C	0.58	A	0.73	C	0.024	0.020	No	No
	49	Placentia Ave/16th St	S	0.39	A	0.35	A	0.41	A	0.47	A	0.018	0.114	No	No
	50	Superior Ave/16th St	S	0.52	A	0.49	A	0.62	B	0.65	B	0.093	0.160	No	No
	51	Newport Blvd/16th St	S	0.55	A	0.60	A	0.57	A	0.62	B	0.017	0.018	No	No
	52	Bluff Rd/Victoria St	S	Future Intersection				Future Intersection				N/A		N/A	
On-Site	53	Bluff Rd/19th St	S	Future Intersections				Future Intersection				N/A		N/A	
	54	Bluff Rd/17th St	S					0.14	A	0.17	A	0.140	0.165	No	No
	55	Bluff Rd/16th St	U					14.6	B	19.6	C	14.6	19.6	No	No
	56	Bluff Rd/15th St	S					0.18	A	0.28	A	0.180	0.276	No	No
	57	Bluff Rd/W. Coast Hwy	S					0.67	B	0.84	D	0.672	0.839	No	No
	58	Monrovia Ave/15th Street	U	7.7	A	7.5	A	9.4	A	9.7	A	1.7	2.2	No	No

Notes:

S = Signalized, U=Unsignalized

Bold and shaded values indicate intersections operating at LOS E or F.

Intersection operation is expressed in average seconds of delay per vehicle during the peak hour for unsignalized intersections using the HCM 2000 Methodology and is expressed in volume-to-capacity (v/c) for signalized intersections using the ICU Methodology.

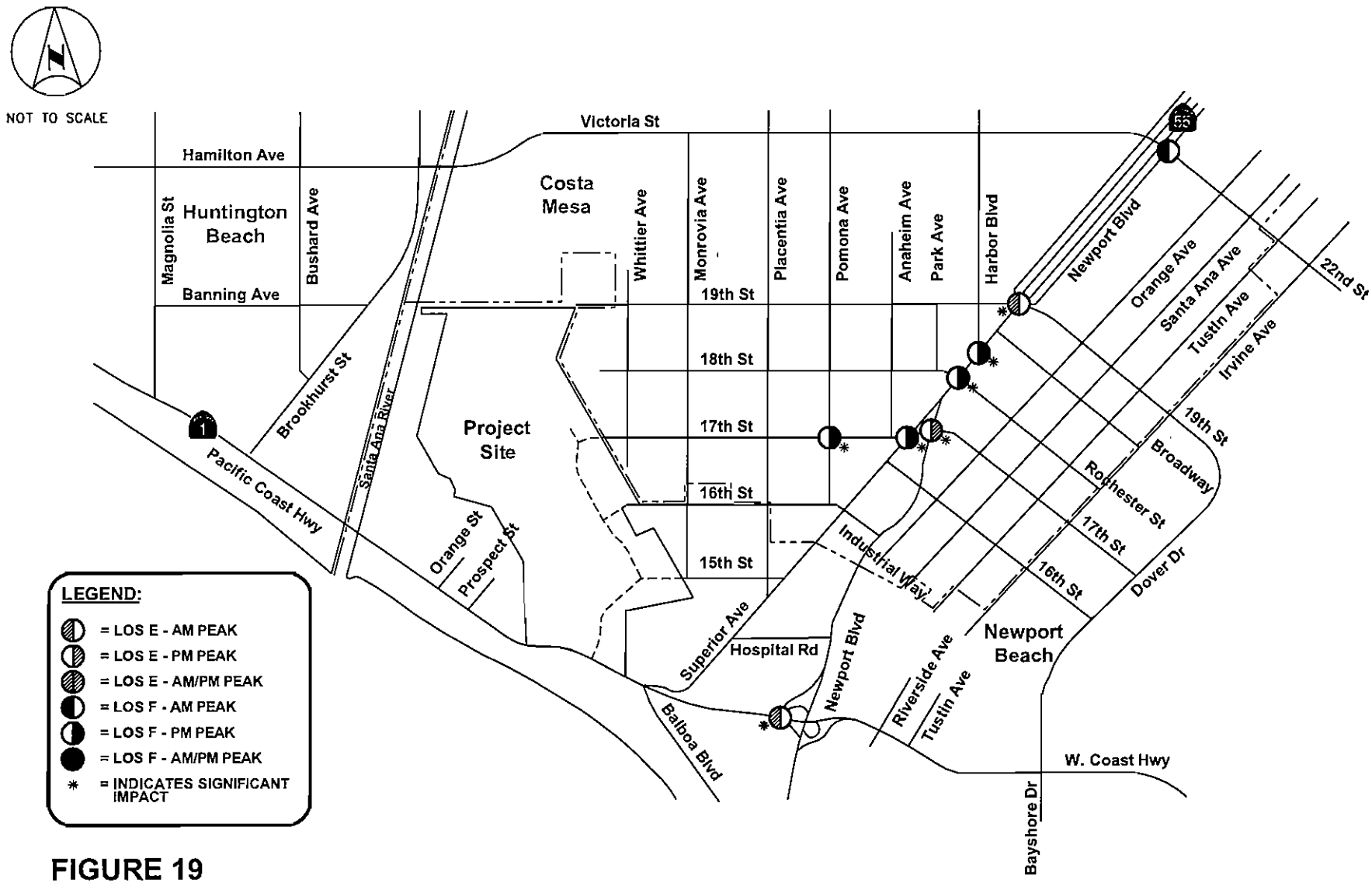

FIGURE 19
DEFICIENT INTERSECTIONS -
YEAR 2016 CUMULATIVE CONDITIONS WITH PROJECT - BLUFF ROAD ALTERNATIVE

FILENAME: Jun 30, 2011 – 5:37pm X:\ORA_TPTO\ZSAC\Projects\Banning Ranch\CAD\8th Submittal.dwg

Kimley-Horn and Associates, Inc.

The addition of project-related traffic would result in a significant impact at the following intersections:

Newport Beach Intersection (s):

- 9. Newport Boulevard at West Coast Highway (AM: LOS E – project impact 0.022)

Costa Mesa Intersection (s):

- 34. Newport Boulevard at 19th Street (AM: LOS E – project impact 0.047)
- 36. Newport Boulevard at Harbor Boulevard (PM: LOS F – project impact 0.100)
- 37. Newport Boulevard at 18th Street/Rochester Street (PM: LOS F – project impact 0.100)
- 42. Pomona Avenue at 17th Street (PM: LOS E – project impact, LOS F operations)
- 43. Superior Avenue at 17th Street (PM: LOS E – project impact 0.196)
- 44. Newport Boulevard at 17th Street (PM: LOS E – project impact 0.055)

Each of these intersections was also forecasted to be deficient and to have a significant project impact for the Year 2016 Cumulative Conditions with the Proposed Project. A discussion of mitigation measures is provided in the Mitigation Section of this report.

Year 2016 Cumulative Conditions with Phase 1 Project

Under this scenario, project-related peak hour traffic volumes for Phase 1 of the project are added to the Year 2016 Cumulative without Project traffic volumes, and Bluff Road is assumed to be constructed only from West Coast Highway to 16th Street. The intersection analysis was conducted, and the results are summarized on **Table 18**. The following intersections would operate at an unacceptable level of service under Year 2016 Cumulative with Phase 1 Project conditions:

Newport Beach Intersection (s):

- 9. Newport Boulevard at West Coast Highway (AM: LOS E)

Costa Mesa Intersection (s):

- 26. Newport Boulevard at Victoria Street/22nd Street (AM: LOS F)
- 36. Newport Boulevard at Harbor Boulevard (PM: LOS F)
- 37. Newport Boulevard at 18th Street/Rochester Street (PM: LOS F)

The deficient study intersections for this scenario are shown on **Figure 20**.

The addition of Phase 1 project-related traffic would result in a significant impact at the following intersections:

Costa Mesa Intersection (s):

- 36. Newport Boulevard at Harbor Boulevard (PM: LOS F – project impact 0.013)
- 37. Newport Boulevard at 18th Street/Rochester Street (PM: LOS F – project impact 0.013)

A discussion of mitigation measures is provided in the Mitigation Section of this report.

TABLE 18
NEWPORT BANNING RANCH
SUMMARY OF INTERSECTION OPERATIONS
YEAR 2016 WITH CUMULATIVE CONDITIONS WITH PHASE 1 PROJECT

		Intersection	Control	Without Project				With Project				Project Impact			
				AM Peak Hour		PM Peak Hour		AM Peak Hour		PM Peak Hour		Change		Significant ?	
				ICU/ Delay	LOS	ICU/ Delay	LOS	ICU/ Delay	LOS	ICU/ Delay	LOS	AM	PM	AM	PM
Newport Beach	1	Monrovia Ave/16th St	U	9.6	A	8.6	A	10.5	B	9.6	A	0.9	1.0	No	No
	2	Placentia Ave/15th St	S	0.49	A	0.38	A	0.49	A	0.37	A	-0.006	-0.017	No	No
	3	Superior Ave/15th St	U	21.0	C	28.8	D	20.6	C	28.1	D	-0.4	-0.7	No	No
	4	Superior Ave/Placentia Ave	S	0.54	A	0.66	B	0.52	A	0.61	B	-0.017	-0.050	No	No
	5	Newport Blvd/Hospital Rd	S	0.54	A	0.65	B	0.54	A	0.65	B	-0.001	0.000	No	No
	6	Orange St/W. Coast Hwy	S	0.81	D	0.76	C	0.82	D	0.76	C	0.001	0.002	No	No
	7	Prospect St/W. Coast Hwy	S	0.80	C	0.76	C	0.80	C	0.77	C	0.002	0.003	No	No
	8	Superior Ave/W. Coast Hwy	S	0.72	C	0.74	C	0.72	C	0.72	C	0.002	-0.018	No	No
	9	Newport Blvd/W. Coast Hwy	S	0.94	E	0.76	C	0.94	E	0.77	C	0.004	0.003	No	No
	10	Riverside Ave/W. Coast Hwy	S	0.77	C	0.82	D	0.77	C	0.82	D	0.004	0.002	No	No
	11	Tustin Ave/W. Coast Hwy	S	0.77	C	0.68	B	0.77	C	0.69	B	0.003	0.008	No	No
	12	Dover Dr/W. Coast Hwy	S	0.72	C	0.85	D	0.72	C	0.85	D	0.001	0.002	No	No
Huntington Beach	13	Magnolia St/Hamilton Ave	S	0.65	B	0.64	B	0.65	B	0.64	B	0.003	0.000	No	No
	14	Bushard St/Hamilton Ave	S	0.47	A	0.59	A	0.47	A	0.59	A	0.000	0.000	No	No
	15	Brookhurst St/Hamilton Ave (Victoria St)	S	0.73	C	0.71	C	0.73	C	0.71	C	0.000	0.001	No	No
	16	Magnolia St/Banning Ave	S	0.26	A	0.33	A	0.26	A	0.33	A	0.002	0.002	No	No
	17	Bushard St/Banning Ave	U	10.3	B	9.4	A	10.3	B	9.4	A	0.0	0.0	No	No
	18	Brookhurst St/Banning Ave	S	0.27	A	0.26	A	0.27	A	0.26	A	0.001	0.000	No	No
	19	Magnolia St/Pacific Coast Hwy	S	0.54	A	0.69	B	0.54	A	0.69	B	0.000	0.001	No	No
	20	Brookhurst St/Bushard St	S	0.35	A	0.36	A	0.35	A	0.36	A	0.001	0.002	No	No
	21	Brookhurst St/Pacific Coast Hwy	S	0.63	B	0.75	C	0.63	B	0.75	C	0.002	0.002	No	No
Costa Mesa	22	Placentia Ave/Victoria St	S	0.86	D	0.86	D	0.86	D	0.86	D	0.001	0.002	No	No
	23	Pomona Ave/Victoria St	S	0.71	C	0.76	C	0.71	C	0.76	C	0.000	0.000	No	No
	24	Harbor Blvd/Victoria St	S	0.79	C	0.88	D	0.79	C	0.89	D	0.001	0.002	No	No
	25	Newport Blvd/Victoria St	S	0.62	B	0.51	A	0.62	B	0.51	A	0.000	0.000	No	No
	26	Newport Blvd/Victoria St (22nd St)	S	1.10	F	0.65	B	1.10	F	0.65	B	0.000	0.000	No	No
	27	Whittier Ave/19th St	U	10.3	B	9.2	A	10.3	B	9.2	A	0.0	0.0	No	No
	28	Monrovia Ave/19th St	U	21.1	C	14.5	B	21.1	C	14.5	B	0.0	0.0	No	No
	29	Placentia Ave/19th St	S	0.54	A	0.76	C	0.54	A	0.76	C	0.002	0.001	No	No
	30	Pomona Ave/19th St	S	0.51	A	0.63	B	0.51	A	0.63	B	0.000	0.000	No	No
	31	Anaheim Ave/19th St	S	0.51	A	0.59	A	0.51	A	0.59	A	0.000	0.000	No	No
	32	Park Ave/19th St	S	0.48	A	0.59	A	0.48	A	0.59	A	0.000	0.000	No	No

TABLE 18
NEWPORT BANNING RANCH
SUMMARY OF INTERSECTION OPERATIONS
YEAR 2016 WITH CUMULATIVE CONDITIONS WITH PHASE 1 PROJECT

		Intersection	Control	Without Project				With Project				Project Impact			
				AM Peak Hour		PM Peak Hour		AM Peak Hour		PM Peak Hour		Change		Significant ?	
				ICU/ Delay	LOS	ICU/ Delay	LOS	ICU/ Delay	LOS	ICU/ Delay	LOS	AM	PM	AM	PM
Costa Mesa	33	Harbor Blvd/19th St	S	0.44	A	0.63	B	0.44	A	0.63	B	0.000	0.000	No	No
	34	Newport Blvd/19th St	S	0.86	D	0.84	D	0.87	D	0.84	D	0.006	0.004	No	No
	35	Newport Blvd/Broadway	S	0.63	B	0.80	C	0.63	B	0.81	D	0.002	0.010	No	No
	36	Newport Blvd/Harbor Blvd	S	0.76	C	1.07	**F**	0.76	C	1.08	**F**	0.004	0.013	No	***Yes***
	37	Newport Blvd/18th St (Rochester St)	S	0.80	C	1.08	**F**	0.80	C	1.09	**F**	0.004	0.013	No	***Yes***
	38	Placentia Ave/18th St	S	0.52	A	0.54	A	0.51	A	0.53	A	-0.002	-0.001	No	No
	39	Whittier Ave/17th St	U	7.4	A	7.4	A	7.4	A	7.4	A	0.0	0.0	No	No
	40	Monrovia Ave/17th St	U	11.1	B	9.9	A	11.4	B	10.2	B	0.3	0.3	No	No
	41	Placentia Ave/17th St	S	0.50	A	0.60	A	0.50	A	0.60	A	-0.001	-0.002	No	No
	42	Pomona Ave/17th St	U	15.3	C	16.6	C	15.3	C	16.6	C	0.0	0.0	No	No
	43	Superior Ave/17th St	S	0.70	B	0.82	D	0.71	C	0.83	D	0.006	0.010	No	No
	44	Newport Blvd/17th St	S	0.80	C	0.88	D	0.81	D	0.89	D	0.009	0.005	No	No
	45	Orange Ave/17th St	S	0.45	A	0.66	B	0.45	A	0.66	B	0.004	0.004	No	No
	46	Santa Ana Ave/17th St	S	0.43	A	0.65	B	0.43	A	0.66	B	0.004	0.004	No	No
	47	Tustin Ave/17th St	S	0.52	A	0.71	C	0.52	A	0.71	C	0.004	0.004	No	No
	48	Irvine Ave/17th St	S	0.56	A	0.71	C	0.56	A	0.71	C	0.004	0.002	No	No
	49	Placentia Ave/16th St	S	0.39	A	0.35	A	0.40	A	0.41	A	0.011	0.056	No	No
	50	Superior Ave/16th St	S	0.52	A	0.51	A	0.54	A	0.56	A	0.021	0.050	No	No
	51	Newport Blvd/16th St	S	0.55	A	0.60	A	0.56	A	0.62	B	0.012	0.013	No	No
	52	Bluff Rd/Victoria St	S	Future Intersection				Future Intersections				N/A		N/A	
On-Site	53	Bluff Rd/19th St	S	Future Intersections				Future Intersections				N/A		N/A	
	54	Bluff Rd/17th St	S												
	55	Bluff Rd/16th St	U												
	56	Bluff Rd/15th St	S					0.06	A	0.06	A	0.057	0.058	No	No
	57	Bluff Rd/W. Coast Hwy	S					0.66	B	0.69	B	0.657	0.690	No	No
	58	Monrovia Ave/15th Street	U	7.7	A	7.5	A	7.7	A	7.5	A	0.0	0.0	No	No

Notes:
S = Signalized, U=Unsignalized
Bold and shaded values indicate intersections operating at LOS E or F.
Intersection operation is expressed in average seconds of delay per vehicle during the peak hour for unsignalized intersections using the HCM 2000 Methodology and is expressed in volume-to-capacity (v/c) for signalized intersections using the ICU Methodology.

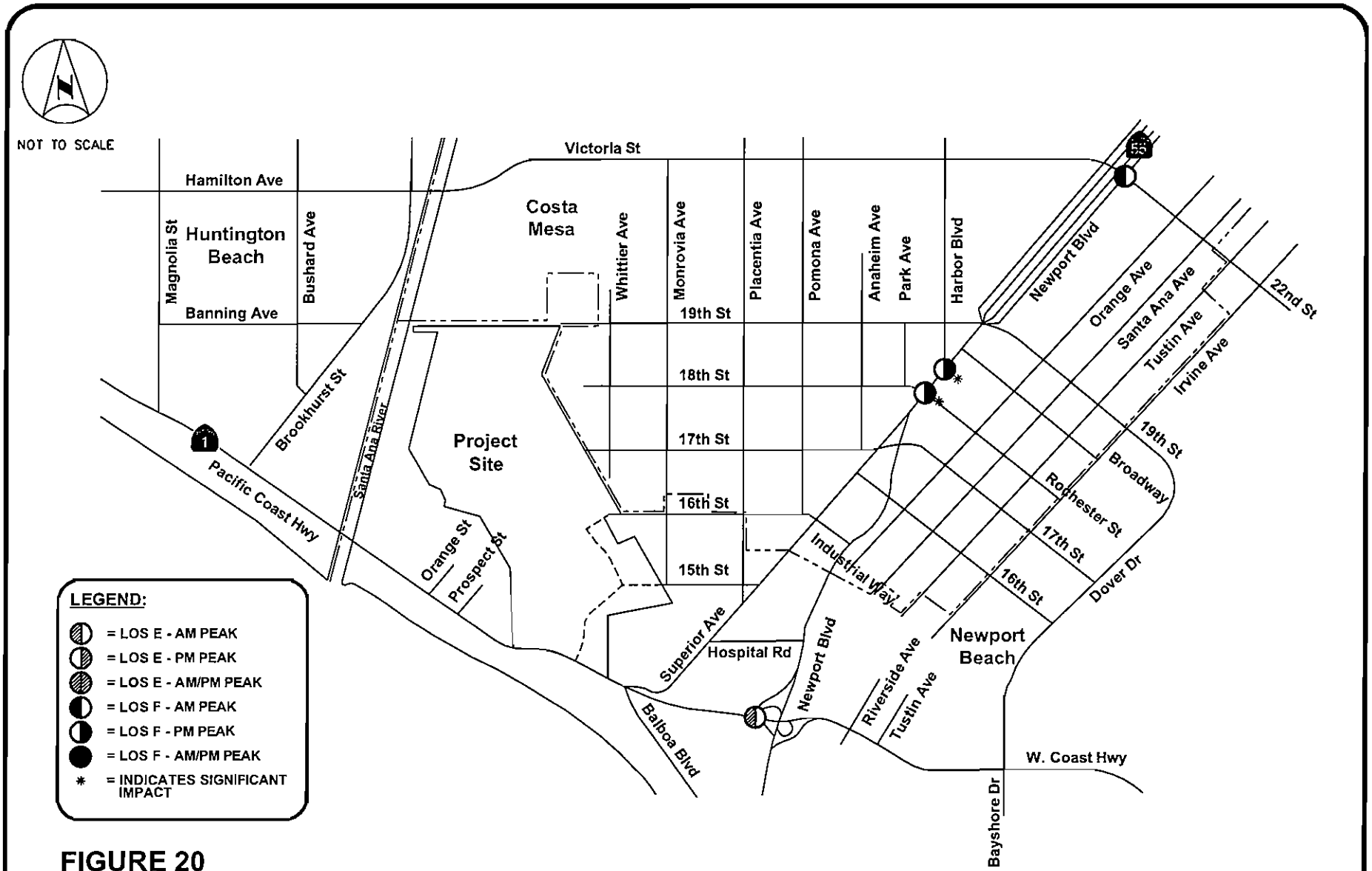

FIGURE 20
DEFICIENT INTERSECTIONS -
YEAR 2016 CUMULATIVE CONDITIONS WITH PHASE 1 PROJECT

FILENAME: Jun 30, 2011 - 5:38pm K:\ORA_TPTD\ZSAC\Projects\Banning Ranch\CAD\8th Submittal.dwg

Kimley-Horn and Associates, Inc.

GENERAL PLAN BUILD-OUT

General Plan Build-out Traffic Forecasts

General Plan Build-out peak hour traffic forecasts were developed by Urban Crossroads using the city's Newport Beach Traffic Model (NBTM). The model assumes build-out of the area and the region according to the General Plans of the City of Newport Beach and surrounding jurisdictions.

Network Assumptions

The General Plan Build-out lane configurations and traffic control assumptions for each study intersection are shown on **Figure 21**.

For the Build-out intersection analysis, the NBTM network assumes that all arterial intersections are signalized, and assumes build-out of all local arterials in accordance with the Orange County Transportation Authority (OCTA) Master Plan of Arterial Highways (MPAH), with the exception of some on-site roadways. [1] Project-specific model runs using the NBTM were conducted to reflect the proposed project network on the project site. The project site plan does not reflect the full MPAH improvements on the Banning Ranch property, as discussed in a later section of this report.

<u>19th Street Bridge</u>

The Orange County Master Plan of Arterial Highways (MPAH) includes the extension of 19th Street from its current terminus in the City of Costa Mesa, over the Santa Ana River, connecting to Brookhurst Street at Banning Avenue in the City of Huntington Beach. The 19th Street extension and river crossing is shown on the MPAH as a Primary (4-lane divided) Arterial. For the purposes of this report, the extension of 19th Street over the river is referred to as the 19th Street Bridge. All General Plan Build-out scenarios analyzed in this report assume the completion of the 19th Street Bridge, as shown on the County MPAH.

Since the timing of the bridge is uncertain, an analysis of future General Plan Build-out with Project conditions without the 19th Street Bridge is provided for information purposes in a later section of this report.

<u>State Route 55 Freeway Extension</u>

State Route 55 (SR-55, the Costa Mesa Freeway) provides north-south access within Orange County from the SR-91 (the Riverside Freeway) to SR-1 (West Coast Highway). From SR-91 to 19th Street, SR-55 is a freeway facility. At 19th Street, the freeway portion ends, and SR-55 merges with Newport Boulevard, which continues southward into Newport Beach.

[1] For the "No Development" analysis, it is assumed that no on-site roadways would be constructed.

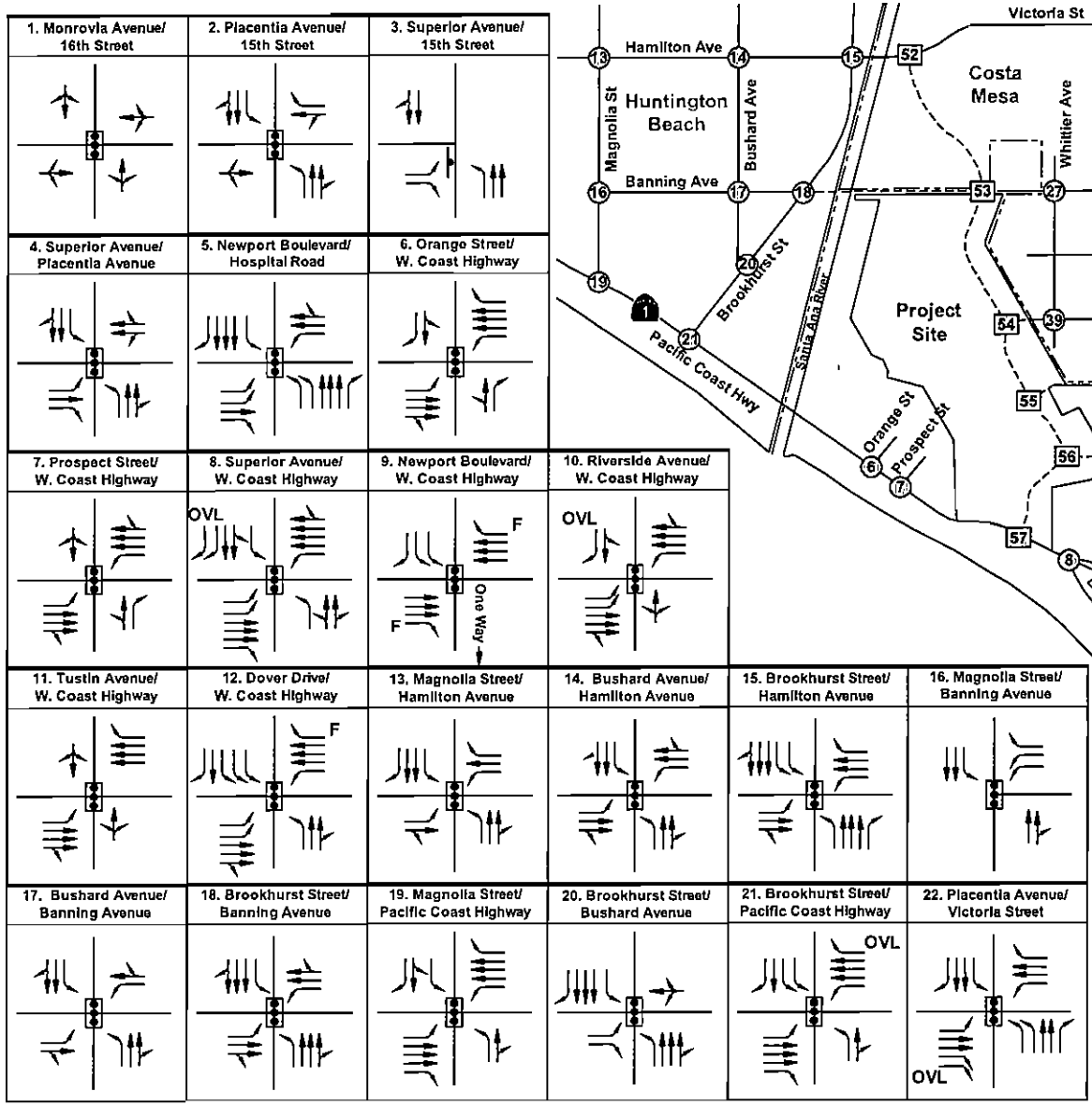

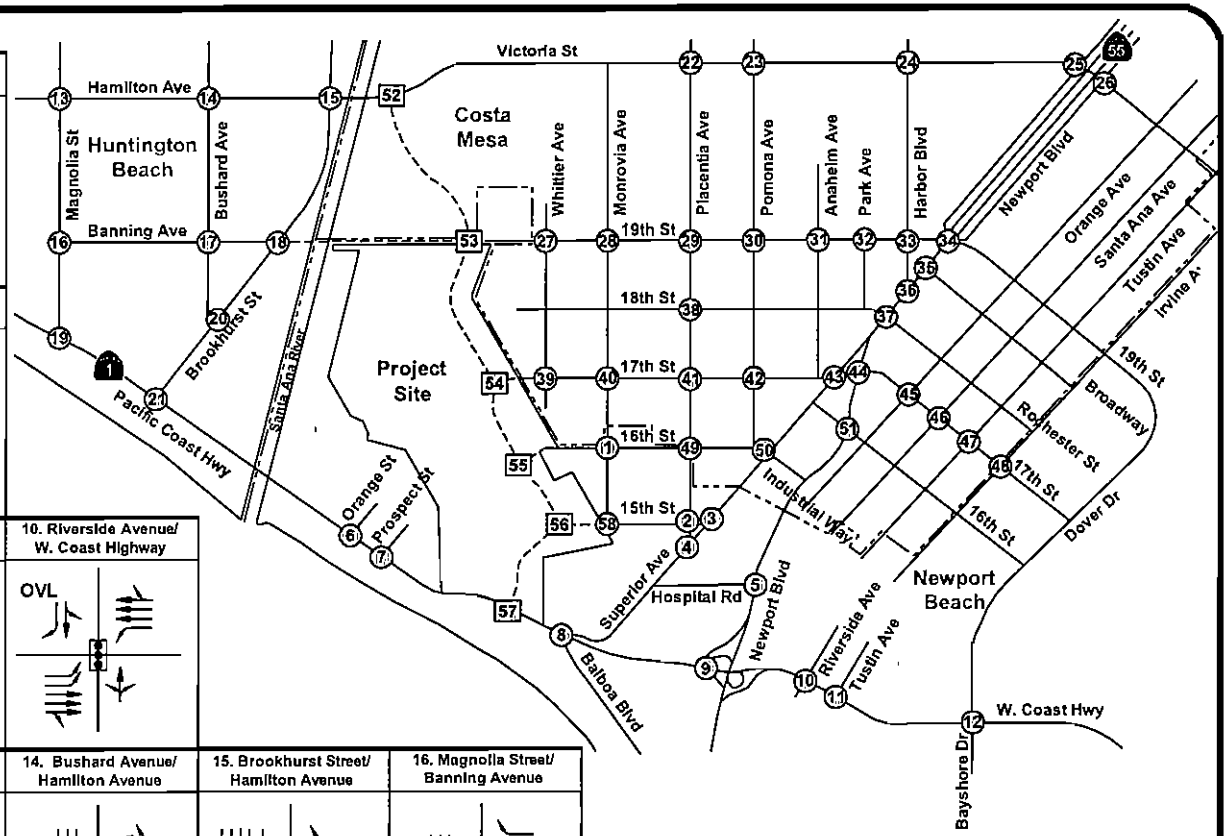

LEGEND:

- = Signalized
- = Stop Sign
- = Study Intersection
- = Future Intersection
- F = Free Right-Turn Lane
- OVL = Right-Turn Overlap
- = City Boundary
- = Future Road

FIGURE 21
GENERAL PLAN BUILD-OUT LANE CONFIGURATION AND TRAFFIC CONTROL

Kimley-Horn and Associates, Inc.

FILENAME: Jun 30, 2011 - 5:39pm K:\ORA_TPTO\ZSAC\Projects\Banning Ranch\CAD\6th Submittal.dwg

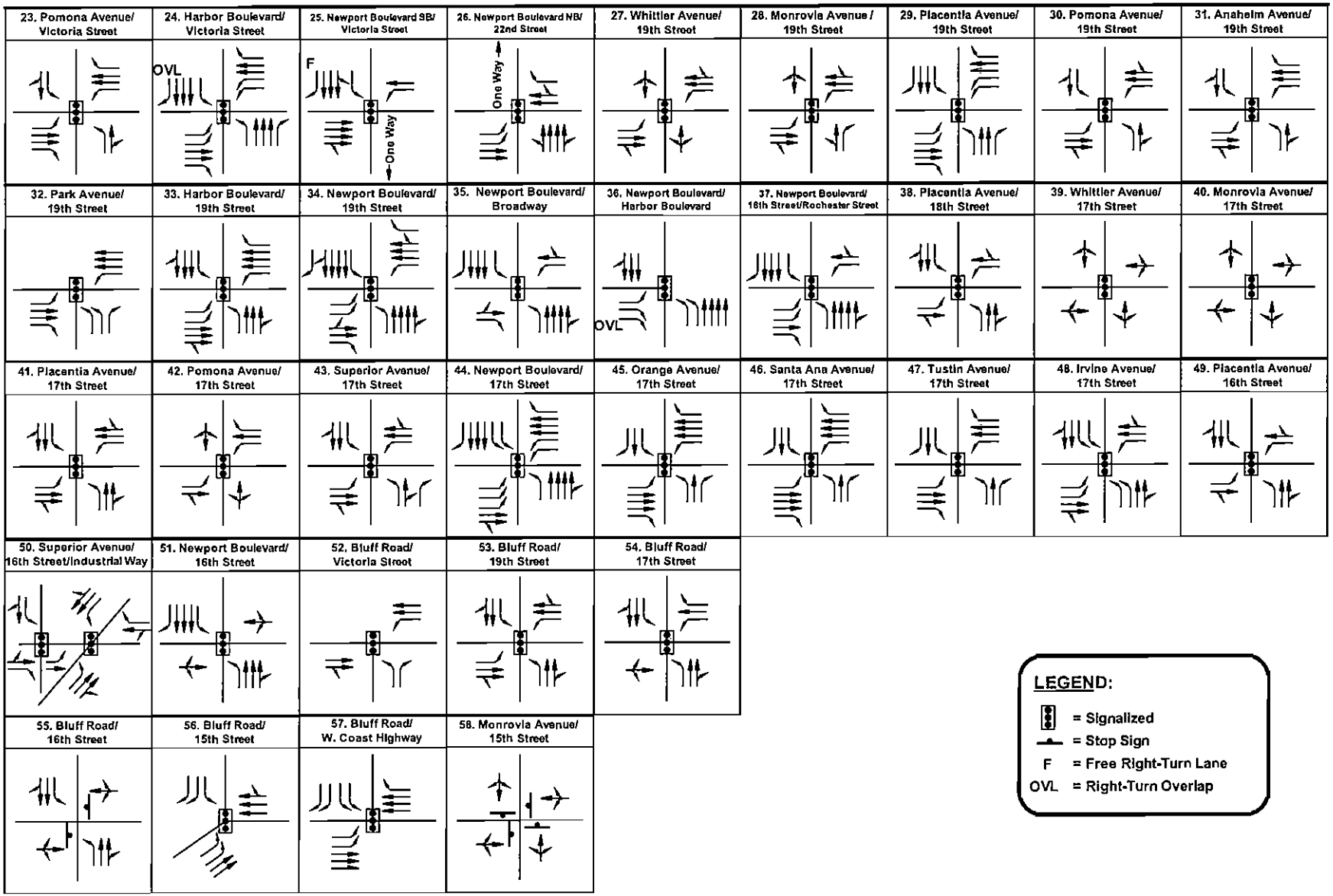

FIGURE 21
GENERAL PLAN BUILD-OUT LANE CONFIGURATION AND TRAFFIC CONTROL (CONT.)

Kimley-Horn and Associates, Inc.

FILENAME: Jun 30, 2011 - 5:56pm K:\ORA_TPTO\ZSAC\Projects\Banning Ranch\CAD\8th Submittal.dwg

The City of Costa Mesa Circulation Element depicts the extension of SR-55 as a freeway between 19th Street and Industrial Way. The Orange County MPAH depicts the freeway portion of SR-55 ending at its current terminus at 19th Street in Costa Mesa. The potential extension of the SR-55 Freeway, and other access alternatives along this corridor have been the subject of study and analysis for a number of years, and a Project Study Report (PSR) to study a number of alternatives is currently being conducted. For the General Plan Build-out analysis scenarios analyzed in this report, the traffic analysis model assumes that the freeway portion of State Route 55 ends at its current terminus at 19th Street, as currently shown on the County Master Plan of Arterial Highways.

General Plan Build-out Conditions Analysis

General Plan Build-out – No Development

This scenario assumes build-out of all land uses consistent with the General Plan of the City of Newport Beach and surrounding jurisdictions, with the exception of the project site itself. This scenario assumes no development on the Newport Banning Ranch property, and no Bluff Road or local street extensions onto the project site. **Table 19** summarizes morning and evening peak hour intersection operations for General Plan Build-out with No Development. The following study intersections would operate deficiently (LOS E or F) in one or both peak hours under this scenario.

Huntington Beach Intersection (s):

- 19. Magnolia Street at Pacific Coast Highway (PM: LOS F)

Costa Mesa Intersection (s):

- 34. Newport Boulevard at 19th Street (AM: LOS F, PM: LOS F)
- 36. Newport Boulevard at Harbor Boulevard (PM: LOS F)
- 37. Newport Boulevard at 18th Street/Rochester Street (PM: LOS F)
- 44. Newport Boulevard at 17th Street (PM: LOS E)
- 48. Irvine Avenue at 17th Street (PM: LOS E)

The deficient study intersections for this scenario are shown on **Figure 22.**

General Plan Build-out analysis worksheets are provided in ***Appendix I.***

TABLE 19
NEWPORT BANNING RANCH
SUMMARY OF INTERSECTION OPERATIONS
GENERAL PLAN BUILD-OUT - NO DEVELOPMENT

		Intersection	Control	AM Peak Hour		PM Peak Hour	
				ICU/ Delay	LOS	ICU/ Delay	LOS
Newport Beach	1	Monrovia Ave/16th St	S	0.32	A	0.31	A
	2	Placentia Ave/15th St	S	0.43	A	0.59	A
	3	Superior Ave/15th St	S	0.38	A	0.46	A
	4	Superior Ave/Placentia Ave	S	0.65	B	0.61	B
	5	Newport Blvd/Hospital Rd	S	0.67	B	0.79	C
	6	Orange St/W. Coast Hwy	S	0.77	C	0.80	C
	7	Prospect St/W. Coast Hwy	S	0.90	D	0.85	D
	8	Superior Ave/W. Coast Hwy	S	0.85	D	0.81	D
	9	Newport Blvd/W. Coast Hwy	S	0.87	D	0.83	D
	10	Riverside Ave/W. Coast Hwy	S	0.72	C	0.87	D
	11	Tustin Ave/W. Coast Hwy	S	0.59	A	0.82	D
	12	Dover Dr/W. Coast Hwy	S	0.78	C	0.90	D
Huntington Beach	13	Magnolia St/Hamilton Ave	S	0.73	C	0.74	C
	14	Bushard St/Hamilton Ave	S	0.54	A	0.65	B
	15	Brookhurst St/Hamilton Ave (Victoria St)	S	0.59	A	0.83	D
	16	Magnolia St/Banning Ave	S	0.59	A	0.49	A
	17	Bushard St/Banning Ave	S	0.67	B	0.73	C
	18	Brookhurst St/Banning Ave	S	0.46	A	0.50	A
	19	Magnolia St/Pacific Coast Hwy	S	0.84	D	1.23	F
	20	Brookhurst St/Bushard St	S	0.40	A	0.42	A
	21	Brookhurst St/Pacific Coast Hwy	S	0.77	C	0.90	D
Costa Mesa	22	Placentia Ave/Victoria St	S	0.74	C	0.82	D
	23	Pomona Ave/Victoria St	S	0.69	B	0.82	D
	24	Harbor Blvd/Victoria St	S	0.66	B	0.79	C
	25	Newport Blvd/Victoria St	S	0.48	A	0.43	A
	26	Newport Blvd /Victoria St (22nd St)	S	0.86	D	0.53	A
	27	Whittier Ave/19th St	S	0.64	B	0.73	C
	28	Monrovia Ave/19th St	S	0.56	A	0.51	A
	29	Placentia Ave/19th St	S	0.60	A	0.58	A
	30	Pomona Ave/19th St	S	0.57	A	0.73	C
	31	Anaheim Ave/19th St	S	0.58	A	0.66	B
	32	Park Ave/19th St	S	0.53	A	0.59	A
	33	Harbor Blvd/19th St	S	0.50	A	0.63	B
	34	Newport Blvd/19th St	S	1.07	F	1.01	F
	35	Newport Blvd/Broadway	S	0.69	B	0.85	D
	36	Newport Blvd/Harbor Blvd	S	0.80	C	1.11	F
	37	Newport Blvd/18th St (Rochester St)	S	0.83	D	1.09	F
	38	Placentia Ave/18th St	S	0.52	A	0.54	A
	39	Whittier Ave/17th St	S	0.18	A	0.23	A
	40	Monrovia Ave/17th St	S	0.31	A	0.41	A
	41	Placentia Ave/17th St	S	0.40	A	0.56	A
	42	Pomona Ave/17th St	S	0.44	A	0.51	A
	43	Superior Ave/17th St	S	0.76	C	0.81	D
	44	Newport Blvd/17th St	S	0.80	C	0.92	E
	45	Orange Ave/17th St	S	0.41	A	0.62	B
	46	Santa Ana Ave/17th St	S	0.43	A	0.51	A
	47	Tustin Ave/17th St	S	0.45	A	0.58	A
	48	Irvine Ave/17th St	S	0.65	B	0.91	E
	49	Placentia Ave/16th St	S	0.26	A	0.32	A
	50	Superior Ave/16th St	S	0.55	A	0.51	A
	51	Newport Blvd/16th St	S	0.68	B	0.75	C
	52	Bluff Rd/Victoria St	S	0.65	B	0.68	B

TABLE 19
NEWPORT BANNING RANCH
SUMMARY OF INTERSECTION OPERATIONS
GENERAL PLAN BUILD-OUT - NO DEVELOPMENT

		Intersection	Control	AM Peak Hour		PM Peak Hour	
				ICU/ Delay	LOS	ICU/ Delay	LOS
On-Site	53	Bluff Rd/19th St	S	0.50	A	0.58	A
	54	Bluff Rd/17th St	N/A				
	55	Bluff Rd/16th St					
	56	Bluff Rd/15th St					
	57	Bluff Rd/W. Coast Hwy					

Notes:
S = Signalized, U=Unsignalized
Bold and shaded values indicate intersections operating at LOS E or F.
Intersection operation is expressed in average seconds of delay per vehicle during the peak hour for unsignalized intersections using the HCM 2000 Methodology and is expressed in volume-to-capacity (v/c) for signalized intersections using the ICU Methodology.

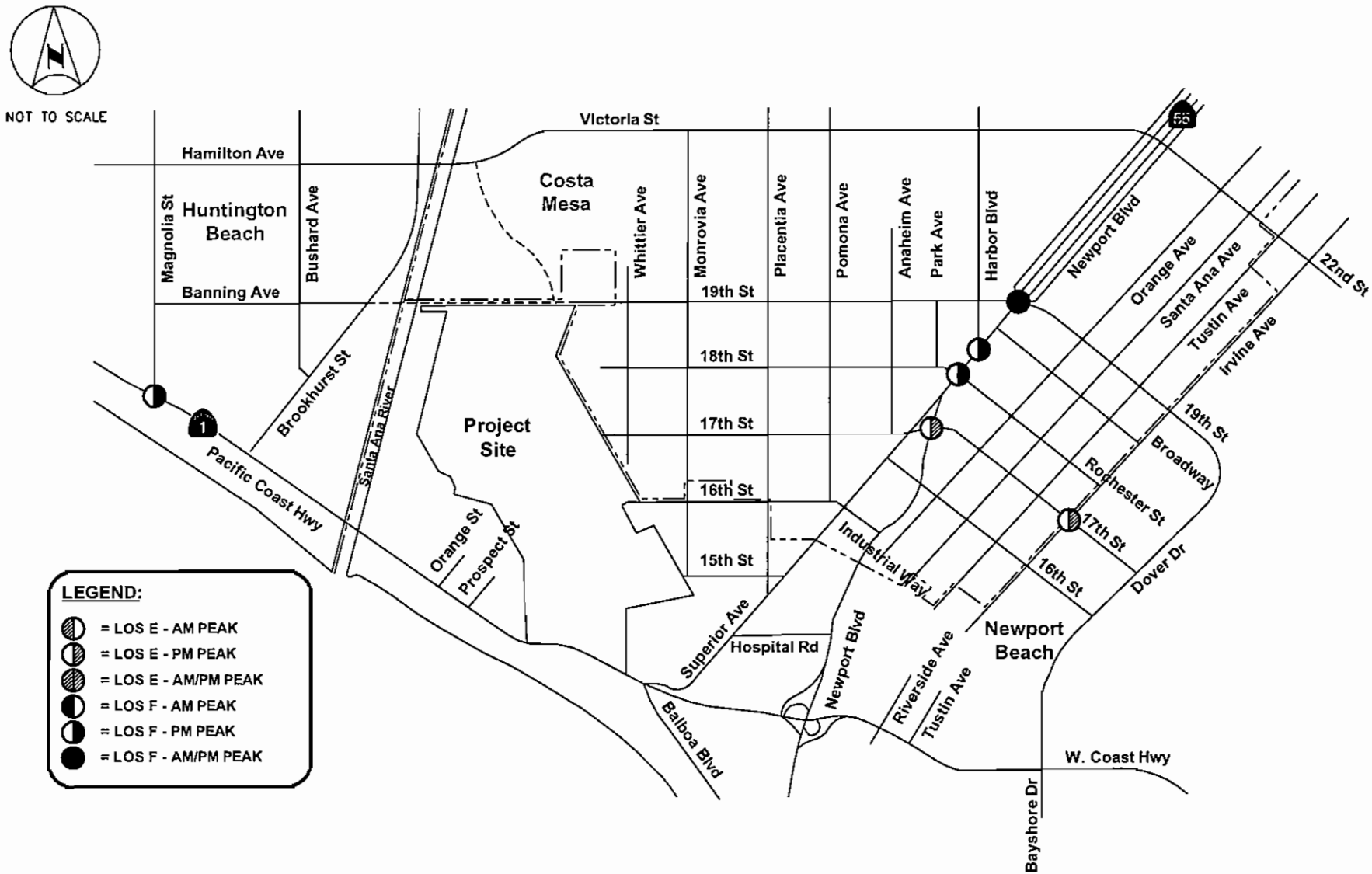

FIGURE 22
DEFICIENT INTERSECTIONS -
GENERAL PLAN BUILD-OUT - NO DEVELOPMENT

FILENAME: Jun 30, 2011 - 5:40pm K:\ORA_TPTO\ZSAC\Projects\Banning Ranch\CAD\Bth Submittal.dwg

Kimley-Horn and Associates, Inc.

General Plan Build-out with Project

This scenario assumes build-out of all General Plan land uses consistent with the General Plan of the City of Newport Beach and surrounding jurisdictions, including the proposed Newport Banning Ranch project, as described in the Project Description section of this report. **Table 20** summarizes peak hour intersection operations for General Plan Build-out with Project conditions. This table also provides a comparison of the With Project to Without Project results, calculates the difference between the two scenarios, and provides an indication of whether or not the project impact would be significant, based on the significance criteria provided in the Methodology section of this report.

In some cases, negative differences between the With Project and Without Project results may occur, indicating improved conditions at some intersections as a result of the project.

This is a result of one or more of the following:

- The reassignment of area traffic that would occur when the Bluff Road connection to West Coast Highway through the project site is constructed as part of the project. As discussed earlier, Bluff Road would provide an alternate route for traffic from Newport Beach and Costa Mesa that currently travels down Superior Avenue or Newport Boulevard to get to West Coast Highway.
- the reassignment of trips by the model to alternate routes, due to congestion at other intersections, and;
- the reassignment of trips by the model that would be served more locally by components of the new project, such as retail or park uses, that would otherwise travel farther or in another direction.

Under General Plan Build-out with Project, the following intersections would operate deficiently.

Huntington Beach Intersection (s):

- 19. Magnolia Street at Pacific Coast Highway (PM: LOS F)

Costa Mesa Intersection (s):

- 34. Newport Boulevard at 19th Street (AM: LOS F, PM: LOS F)
- 36. Newport Boulevard at Harbor Boulevard (PM: LOS F)
- 37. Newport Boulevard at 18th Street/Rochester Street (PM: LOS F)
- 44. Newport Boulevard at 17th Street (PM: LOS E)
- 48. Irvine Avenue at 17th Street (PM: LOS E)

Each of these intersections was forecasted to be deficient without the project under the General Plan with No Development scenario. Intersections 36 and 37 were also identified as deficient in the existing conditions. All other study intersections would continue to operate at acceptable standards in both peak hours. General Plan Build-out analysis worksheets are provided in ***Appendix I.*** The deficient study intersections for this scenario are shown on **Figure 23.**

TABLE 20
NEWPORT BANNING RANCH
SUMMARY OF INTERSECTION OPERATIONS
GENERAL PLAN BUILD-OUT WITH PROJECT

		Intersection	Control	No Project Development				With Project Development				Project Impact			
				AM Peak Hour		PM Peak Hour		AM Peak Hour		PM Peak Hour		Change		Significant ?	
				ICU/ Delay	LOS	ICU/ Delay	LOS	ICU/ Delay	LOS	ICU/ Delay	LOS	AM	PM	AM	PM
Newport Beach	1	Monrovia Ave/16th St	S	0.32	A	0.31	A	0.37	A	0.38	A	0.049	0.064	No	No
	2	Placentia Ave/15th St	S	0.43	A	0.59	A	0.52	A	0.58	A	0.094	-0.019	No	No
	3	Superior Ave/15th St	S	0.38	A	0.46	A	0.52	A	0.50	A	0.141	0.034	No	No
	4	Superior Ave/Placentia Ave	S	0.65	B	0.61	B	0.60	A	0.48	A	-0.047	-0.123	No	No
	5	Newport Blvd/Hospital Rd	S	0.67	B	0.79	C	0.63	B	0.75	C	-0.033	-0.033	No	No
	6	Orange St/W. Coast Hwy	S	0.77	C	0.80	C	0.77	C	0.81	D	-0.002	0.003	No	No
	7	Prospect St/W. Coast Hwy	S	0.90	D	0.85	D	0.90	D	0.85	D	0.002	-0.002	No	No
	8	Superior Ave/W. Coast Hwy	S	0.85	D	0.81	D	0.89	D	0.83	D	0.036	0.024	No	No
	9	Newport Blvd/W. Coast Hwy	S	0.87	D	0.83	D	0.89	D	0.84	D	0.017	0.013	No	No
	10	Riverside Ave/W. Coast Hwy	S	0.72	C	0.87	D	0.74	C	0.89	D	0.017	0.015	No	No
	11	Tustin Ave/W. Coast Hwy	S	0.59	A	0.82	D	0.60	A	0.83	D	0.014	0.004	No	No
	12	Dover Dr/W. Coast Hwy	S	0.78	C	0.90	D	0.79	C	0.90	D	0.009	0.005	No	No
Huntington Beach	13	Magnolia St/Hamilton Ave	S	0.73	C	0.74	C	0.74	C	0.74	C	0.006	0.001	No	No
	14	Bushard St/Hamilton Ave	S	0.54	A	0.65	B	0.53	A	0.64	B	-0.007	-0.004	No	No
	15	Brookhurst St/Hamilton Ave (Victoria St)	S	0.59	A	0.83	D	0.65	B	0.90	D	0.069	0.069	No	No
	16	Magnolia St/Banning Ave	S	0.59	A	0.49	A	0.63	B	0.52	A	0.032	0.029	No	No
	17	Bushard St/Banning Ave	S	0.67	B	0.73	C	0.71	C	0.78	C	0.041	0.053	No	No
	18	Brookhurst St/Banning Ave	S	0.46	A	0.50	A	0.48	A	0.54	A	0.015	0.032	No	No
	19	Magnolia St/Pacific Coast Hwy	S	0.84	D	1.23	[illegible]	0.83	D	1.19	F	-0.006	-0.041	No	No
	20	Brookhurst St/Bushard St	S	0.40	A	0.42	A	0.38	A	0.38	A	-0.026	-0.038	No	No
	21	Brookhurst St/Pacifie Coast Hwy	S	0.77	C	0.90	D	0.77	C	0.89	D	-0.006	-0.006	No	No
Costa Mesa	22	Placentia Ave/Victoria St	S	0.74	C	0.82	D	0.72	C	0.80	C	-0.020	-0.019	No	No
	23	Pomona Ave/Victoria St	S	0.69	B	0.82	D	0.70	B	0.82	D	0.001	0.003	No	No
	24	Harbor Blvd/Victoria St	S	0.66	B	0.79	C	0.66	B	0.78	C	0.001	-0.015	No	No
	25	Newport Blvd/Victoria St	S	0.48	A	0.43	A	0.48	A	0.44	A	-0.003	0.004	No	No
	26	Newport Blvd /Victoria St (22nd St)	S	0.86	D	0.53	A	0.86	D	0.53	A	0.002	0.002	No	No
	27	Whittier Ave/19th St	S	0.64	B	0.73	C	0.53	A	0.57	A	-0.110	-0.160	No	No
	28	Monrovia Ave/19th St	S	0.56	A	0.51	A	0.51	A	0.49	A	-0.050	-0.020	No	No
	29	Placentia Ave/19th St	S	0.60	A	0.58	A	0.54	A	0.58	A	-0.063	-0.007	No	No
	30	Pomona Ave/19th St	S	0.57	A	0.73	C	0.58	A	0.74	C	0.011	0.006	No	No
	31	Anaheim Ave/19th St	S	0.58	A	0.66	B	0.59	A	0.68	B	0.003	0.018	No	No
	32	Park Ave/19th St	S	0.53	A	0.59	A	0.53	A	0.60	A	0.003	0.006	No	No

TABLE 20
NEWPORT BANNING RANCH
SUMMARY OF INTERSECTION OPERATIONS
GENERAL PLAN BUILD-OUT WITH PROJECT

		Intersection	Control	No Project Development				With Project Development				Project Impact			
				AM Peak Hour		PM Peak Hour		AM Peak Hour		PM Peak Hour		Change		Significant ?	
				ICU/ Delay	LOS	ICU/ Delay	LOS	ICU/ Delay	LOS	ICU/ Delay	LOS	AM	PM	AM	PM
Costa Mesa	33	Harbor Blvd/19th St	S	0.50	A	0.63	B	0.50	A	0.63	B	-0.002	0.002	No	No
	34	Newport Blvd/19th St	S	1.07	**F**	1.01	**F**	1.08	**F**	1.01	**F**	0.011	0.003	*Yes*	No
	35	Newport Blvd/Broadway	S	0.69	B	0.85	D	0.69	B	0.87	D	0.000	0.016	No	No
	36	Newport Blvd/Harbor Blvd	S	0.80	C	1.11	**F**	0.79	C	1.12	**F**	-0.006	0.011	No	*Yes*
	37	Newport Blvd/18th St (Rochester St)	S	0.83	D	1.09	**F**	0.82	D	1.09	**F**	-0.002	0.006	No	No
	38	Placentia Ave/18th St	S	0.52	A	0.54	A	0.46	A	0.48	A	-0.057	-0.054	No	No
	39	Whittier Ave/17th St	S	0.18	A	0.23	A	0.39	A	0.49	A	0.213	0.262	No	No
	40	Monrovia Ave/17th St	S	0.31	A	0.41	A	0.35	A	0.45	A	0.044	0.037	No	No
	41	Placentia Ave/17th St	S	0.40	A	0.56	A	0.40	A	0.50	A	0.006	-0.060	No	No
	42	Pomona Ave/17th St	S	0.44	A	0.51	A	0.51	A	0.54	A	0.063	0.031	No	No
	43	Superior Ave/17th St	S	0.76	C	0.81	D	0.80	C	0.81	D	0.043	-0.001	No	No
	44	Newport Blvd/17th St	S	0.80	C	0.92	**E**	0.83	D	0.93	**E**	0.023	0.005	No	No
	45	Orange Ave/17th St	S	0.41	A	0.62	B	0.42	A	0.62	B	0.011	0.002	No	No
	46	Santa Ana Ave/17th St	S	0.43	A	0.51	A	0.43	A	0.51	A	0.001	-0.004	No	No
	47	Tustin Ave/17th St	S	0.45	A	0.58	A	0.44	A	0.58	A	-0.007	0.000	No	No
	48	Irvine Ave/17th St	S	0.65	B	0.91	**E**	0.64	B	0.91	**E**	-0.009	0.000	No	No
	49	Placentia Ave/16th St	S	0.26	A	0.32	A	0.28	A	0.31	A	0.022	-0.015	No	No
	50	Superior Ave/16th St	S	0.55	A	0.51	A	0.57	A	0.50	A	0.016	-0.011	No	No
	51	Newport Blvd/16th St	S	0.68	B	0.75	C	0.68	B	0.74	C	0.002	-0.007	No	No
	52	Bluff Rd/Victoria St	S	0.65	B	0.68	B	0.75	C	0.72	C	0.106	0.044	No	No
On-Site	53	Bluff Rd/19th St	S	0.50	A	0.58	A	0.58	A	0.66	B	0.082	0.072	No	No
	54	Bluff Rd/17th St	S	N/A				0.45	A	0.57	A	0.448	0.566	No	No
	55	Bluff Rd/16th St	U					16.1	C	16.7	C	16.1	16.7	No	No
	56	Bluff Rd/15th St	S					0.42	A	0.65	B	0.418	0.651	No	No
	57	Bluff Rd/W. Coast Hwy	S					0.74	C	0.86	D	0.736	0.857	No	No

Notes:

S = Signalized, U=Unsignalized

Bold and shaded values indicate intersections operating at LOS E or F.

Intersection operation is expressed in average seconds of delay per vehicle during the peak hour for unsignalized intersections using the HCM 2000 Methodology and is expressed in volume-to-capacity (v/c) for signalized intersections using the ICU Methodology.

Negative changes in ICU values may occur as a result of: the reassignment of traffic due to the Bluff Road connection to West Coast Highway; reassignment of trips in the traffic analysis model due to congestion at other intersections, and trips served more locally by the new project that would otherwise travel farther or in another direction.

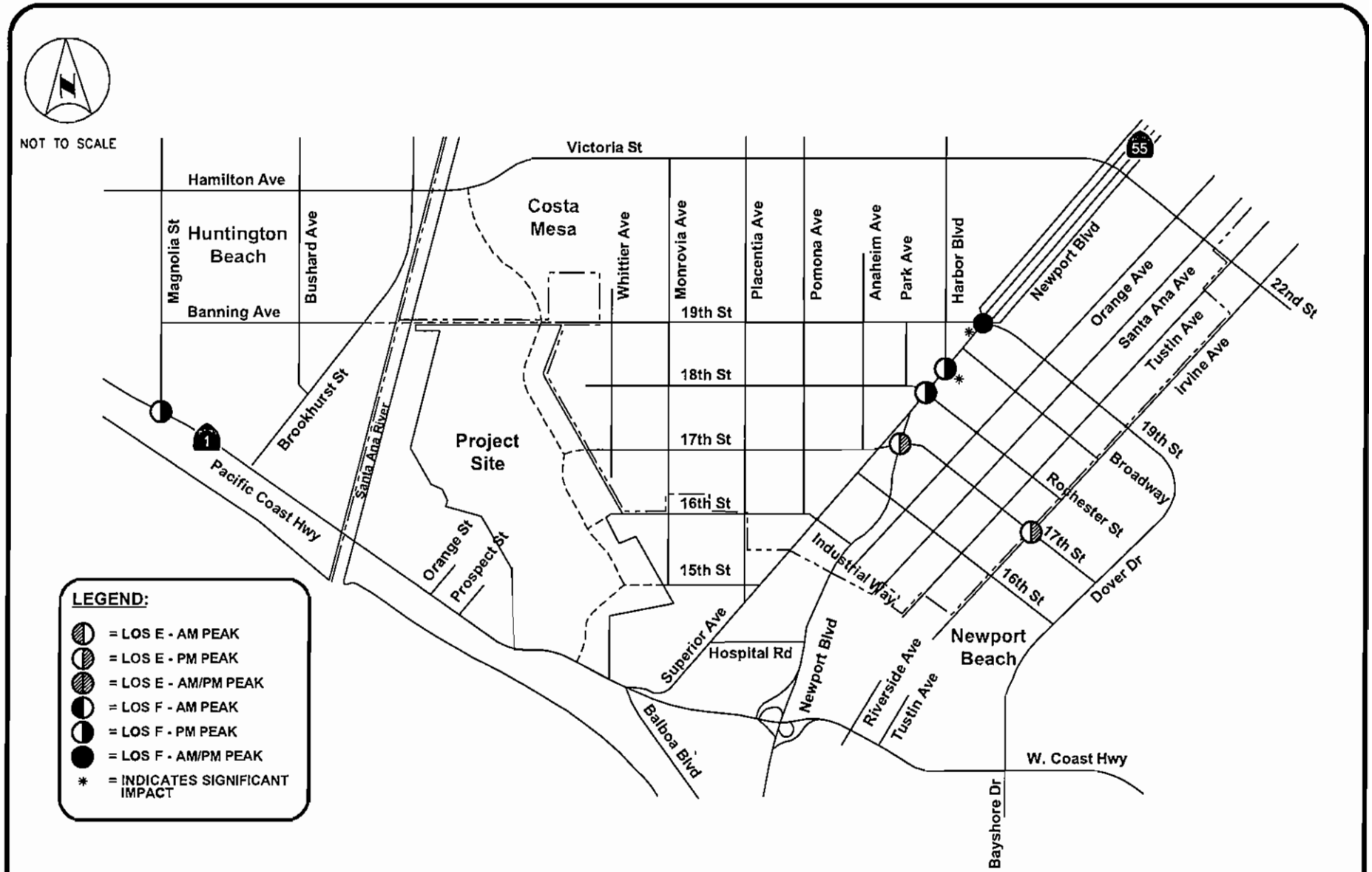

FIGURE 23
DEFICIENT INTERSECTIONS -
GENERAL PLAN BUILD-OUT WITH PROJECT

FILENAME: Jun 30, 2011 – 5:41pm K:\ORA_TPTO\ZSAC\Projects\Banning Ranch\CAD\8th Submittal.dwg

Kimley-Horn and Associates, Inc.

The addition of project-related traffic would result in a significant impact at the following intersections:

Costa Mesa Intersection (s):

- 34. Newport Boulevard at 19th Street (AM: LOS F – project impact 0.011)
- 36. Newport Boulevard at Harbor Boulevard (PM: LOS F – project impact 0.011)

For significant project impacts identified under the General Plan Build-out analysis, this study will identify feasible improvements that could mitigate some or all of the impacts of the project. A discussion of mitigation measures is provided in the Mitigation Section of this report.

General Plan Build-out with Project – Bluff Road Alternative

The General Plan Build-out with Project – Bluff Road Alternative assumes the development of the Newport Banning Ranch with the proposed development plan, and assumes that Bluff Road is constructed only from West Coast Highway to the north development boundary, just north of 17th Street. This alternative eliminates the Bluff Road connection between the northerly development boundary and 19th Street.

Table 21 summarizes General Plan Build-out with Project – Bluff Road Alternative peak hour intersection operations, including the project impact. Negative project impacts may occur as a result of the reassignment of traffic due to the Bluff Road connection to West Coast Highway, reassignment of trips in the traffic analysis due to congestion at other intersections, and/or trips served more locally by the new project that would otherwise travel farther or in another direction. The following study intersections would operate deficiently under this scenario.

Huntington Beach Intersection (s):

- 19. Magnolia Street at Pacific Coast Highway (PM: LOS F)

Costa Mesa Intersection (s):

- 34. Newport Boulevard at 19th Street (AM: LOS F, PM: LOS F)
- 36. Newport Boulevard at Harbor Boulevard (PM: LOS F)
- 37. Newport Boulevard at 18th Street/Rochester Street (PM: LOS F)
- 44. Newport Boulevard at 17th Street (PM: LOS E)
- 48. Irvine Avenue at 17th Street (PM: LOS E)

The deficient study intersections for this scenario are shown on **Figure 24.**

All of these intersections were identified as operating deficiently in the General Plan Build-out with Project condition.

The addition of project-related traffic would result in a significant impact at the following intersections:

TABLE 21
NEWPORT BANNING RANCH
SUMMARY OF INTERSECTION OPERATIONS
GENERAL PLAN BUILD-OUT WITH PROJECT - BLUFF ROAD ALTERNATIVE

		Intersection	Control	No Project Development				With Project Development				Project Impact			
				AM Peak Hour		PM Peak Hour		AM Peak Hour		PM Peak Hour		Change		Significant ?	
				ICU/ Delay	LOS	ICU/ Delay	LOS	ICU/ Delay	LOS	ICU/ Delay	LOS	AM	PM	AM	PM
Newport Beach	1	Monrovia Ave/16th St	S	0.32	A	0.31	A	0.34	A	0.36	A	0.018	0.044	No	No
	2	Placentia Ave/15th St	S	0.43	A	0.59	A	0.53	A	0.51	A	0.106	-0.080	No	No
	3	Superior Ave/15th St	S	0.38	A	0.46	A	0.52	A	0.47	A	0.144	0.009	No	No
	4	Superior Ave/Placentia Ave	S	0.65	B	0.61	B	0.59	A	0.50	A	-0.056	-0.110	No	No
	5	Newport Blvd/Hospital Rd	S	0.67	B	0.79	C	0.64	B	0.75	C	-0.025	-0.033	No	No
	6	Orange St/W. Coast Hwy	S	0.77	C	0.80	C	0.76	C	0.74	D	-0.006	-0.069	No	No
	7	Prospect St/W. Coast Hwy	S	0.90	D	0.85	D	0.90	D	0.88	D	0.002	0.031	No	No
	8	Superior Ave/W. Coast Hwy	S	0.85	D	0.81	D	0.89	D	0.86	D	0.033	0.046	No	No
	9	Newport Blvd/W. Coast Hwy	S	0.87	D	0.83	D	0.88	D	0.84	D	0.013	0.011	No	No
	10	Riverside Ave/W. Coast Hwy	S	0.72	C	0.87	D	0.73	C	0.88	D	0.012	0.013	No	No
	11	Tustin Ave/W. Coast Hwy	S	0.59	A	0.82	D	0.60	A	0.83	D	0.010	0.004	No	No
	12	Dover Dr/W. Coast Hwy	S	0.78	C	0.90	D	0.78	C	0.90	D	0.005	0.003	No	No
Huntington Beach	13	Magnolia St/Hamilton Ave	S	0.73	C	0.74	C	0.78	C	0.74	C	0.050	0.004	No	No
	14	Bushard St/Hamilton Ave	S	0.54	A	0.65	B	0.54	A	0.64	B	-0.004	-0.007	No	No
	15	Brookhurst St/Hamilton Ave (Victoria St)	S	0.59	A	0.83	D	0.60	A	0.85	D	0.011	0.020	No	No
	16	Magnolia St/Banning Ave	S	0.59	A	0.49	A	0.66	B	0.48	A	0.069	-0.006	No	No
	17	Bushard St/Banning Ave	S	0.67	B	0.73	C	0.75	C	0.69	B	0.088	-0.037	No	No
	18	Brookhurst St/Banning Ave	S	0.46	A	0.50	A	0.49	A	0.48	A	0.025	-0.024	No	No
	19	Magnolia St/Pacific Coast Hwy	S	0.84	D	1.23	F	0.79	C	1.14	F	-0.052	-0.085	No	No
	20	Brookhurst St/Bushard St	S	0.40	A	0.42	A	0.39	A	0.37	A	-0.012	-0.049	No	No
	21	Brookhurst St/Pacific Coast Hwy	S	0.77	C	0.90	D	0.77	C	0.88	D	0.003	-0.022	No	No
Costa Mesa	22	Placentia Ave/Victoria St	S	0.74	C	0.82	D	0.73	C	0.82	D	-0.007	0.000	No	No
	23	Pomona Ave/Victoria St	S	0.69	B	0.82	D	0.71	C	0.84	D	0.013	0.022	No	No
	24	Harbor Blvd/Victoria St	S	0.66	B	0.79	C	0.66	B	0.79	C	0.005	0.000	No	No
	25	Newport Blvd/Victoria St	S	0.48	A	0.43	A	0.48	A	0.44	A	0.000	0.009	No	No
	26	Newport Blvd /Victoria St (22nd St)	S	0.86	D	0.53	A	0.87	D	0.53	A	0.004	0.002	No	No
	27	Whittier Ave/19th St	S	0.64	B	0.73	C	0.69	B	0.73	C	0.045	0.004	No	No
	28	Monrovia Ave/19th St	S	0.56	A	0.51	A	0.58	A	0.50	A	0.024	-0.013	No	No
	29	Placentia Ave/19th St	S	0.60	A	0.58	A	0.59	A	0.58	A	-0.011	-0.006	No	No
	30	Pomona Ave/19th St	S	0.57	A	0.73	C	0.58	A	0.75	C	0.012	0.022	No	No
	31	Anaheim Ave/19th St	S	0.58	A	0.66	B	0.59	A	0.68	B	0.003	0.012	No	No
	32	Park Ave/19th St	S	0.53	A	0.59	A	0.53	A	0.60	A	0.003	0.006	No	No

TABLE 21
NEWPORT BANNING RANCH
SUMMARY OF INTERSECTION OPERATIONS
GENERAL PLAN BUILD-OUT WITH PROJECT - BLUFF ROAD ALTERNATIVE

		Intersection	Control	No Project Development				With Project Development				Project Impact			
				AM Peak Hour		PM Peak Hour		AM Peak Hour		PM Peak Hour		Change		Significant ?	
				ICU/ Delay	LOS	ICU/ Delay	LOS	ICU/ Delay	LOS	ICU/ Delay	LOS	AM	PM	AM	PM
Costa Mesa	33	Harbor Blvd/19th St	S	0.50	A	0.63	B	0.50	A	0.63	B	-0.002	0.001	No	No
	34	Newport Blvd/19th St	S	1.07	**F**	1.01	**F**	1.09	**F**	1.02	**F**	0.023	0.008	***Yes***	No
	35	Newport Blvd/Broadway	S	0.69	B	0.85	D	0.70	B	0.88	D	0.006	0.021	No	No
	36	Newport Blvd/Harbor Blvd	S	0.80	C	1.11	**F**	0.80	C	1.13	**F**	0.006	0.021	No	***Yes***
	37	Newport Blvd/18th St (Rochester St)	S	0.83	D	1.09	**F**	0.83	D	1.10	**F**	0.004	0.016	No	***Yes***
	38	Placentia Ave/18th St	S	0.52	A	0.54	A	0.54	A	0.55	A	0.027	0.009	No	No
	39	Whittier Ave/17th St	S	0.18	A	0.23	A	0.41	A	0.44	A	0.231	0.218	No	No
	40	Monrovia Ave/17th St	S	0.31	A	0.41	A	0.33	A	0.44	A	0.018	0.030	No	No
	41	Placentia Ave/17th St	S	0.40	A	0.56	A	0.45	A	0.56	A	0.050	0.000	No	No
	42	Pomona Ave/17th St	S	0.44	A	0.51	A	0.51	A	0.52	A	0.062	0.006	No	No
	43	Superior Ave/17th St	S	0.76	C	0.81	D	0.81	D	0.81	D	0.049	-0.003	No	No
	44	Newport Blvd/17th St	S	0.80	C	0.92	**E**	0.83	D	0.93	**E**	0.027	0.012	No	***Yes***
	45	Orange Ave/17th St	S	0.41	A	0.62	B	0.42	A	0.62	B	0.005	0.002	No	No
	46	Santa Ana Ave/17th St	S	0.43	A	0.51	A	0.43	A	0.50	A	-0.002	-0.010	No	No
	47	Tustin Ave/17th St	S	0.45	A	0.58	A	0.44	A	0.58	A	-0.007	0.003	No	No
	48	Irvine Ave/17th St	S	0.65	B	0.91	**E**	0.64	B	0.92	**E**	-0.009	0.003	No	No
	49	Placentia Ave/16th St	S	0.26	A	0.32	A	0.29	A	0.34	A	0.031	0.020	No	No
	50	Superior Ave/16th St	S	0.55	A	0.51	A	0.58	A	0.52	A	0.022	0.010	No	No
	51	Newport Blvd/16th St	S	0.68	B	0.75	C	0.68	B	0.76	C	0.004	0.004	No	No
	52	Bluff Rd/Victoria St	S	0.65	B	0.68	B	0.67	B	0.68	B	0.023	0.003	No	No
On-Site	53	Bluff Rd/19th St	S	0.50	A	0.58	A	0.53	A	0.58	A	0.031	0.000	No	No
	54	Bluff Rd/17th St	S	N/A				0.26	A	0.31	A	0.257	0.313	No	No
	55	Bluff Rd/16th St	U					11.5	B	15.6	C	11.5	15.6	No	No
	56	Bluff Rd/15th St	S					0.43	A	0.66	B	0.432	0.657	No	No
	57	Bluff Rd/W. Coast Hwy	S					0.74	C	0.88	D	0.735	0.881	No	No

Notes:

S = Signalized, U=Unsignalized

Bold and shaded values indicate intersections operating at LOS E or F.

Intersection operation is expressed in average seconds of delay per vehicle during the peak hour for unsignalized intersections using the HCM 2000 Methodology and is expressed in volume-to-capacity (v/c) for signalized intersections using the ICU Methodology.

Negative changes in ICU values may occur as a result of: the reassignment of traffic due to the Bluff Road connection to West Coast Highway; reassignment of trips in the traffic analysis model due to congestion at other intersections, and trips served more locally by the new project that would otherwise travel farther or in another direction.

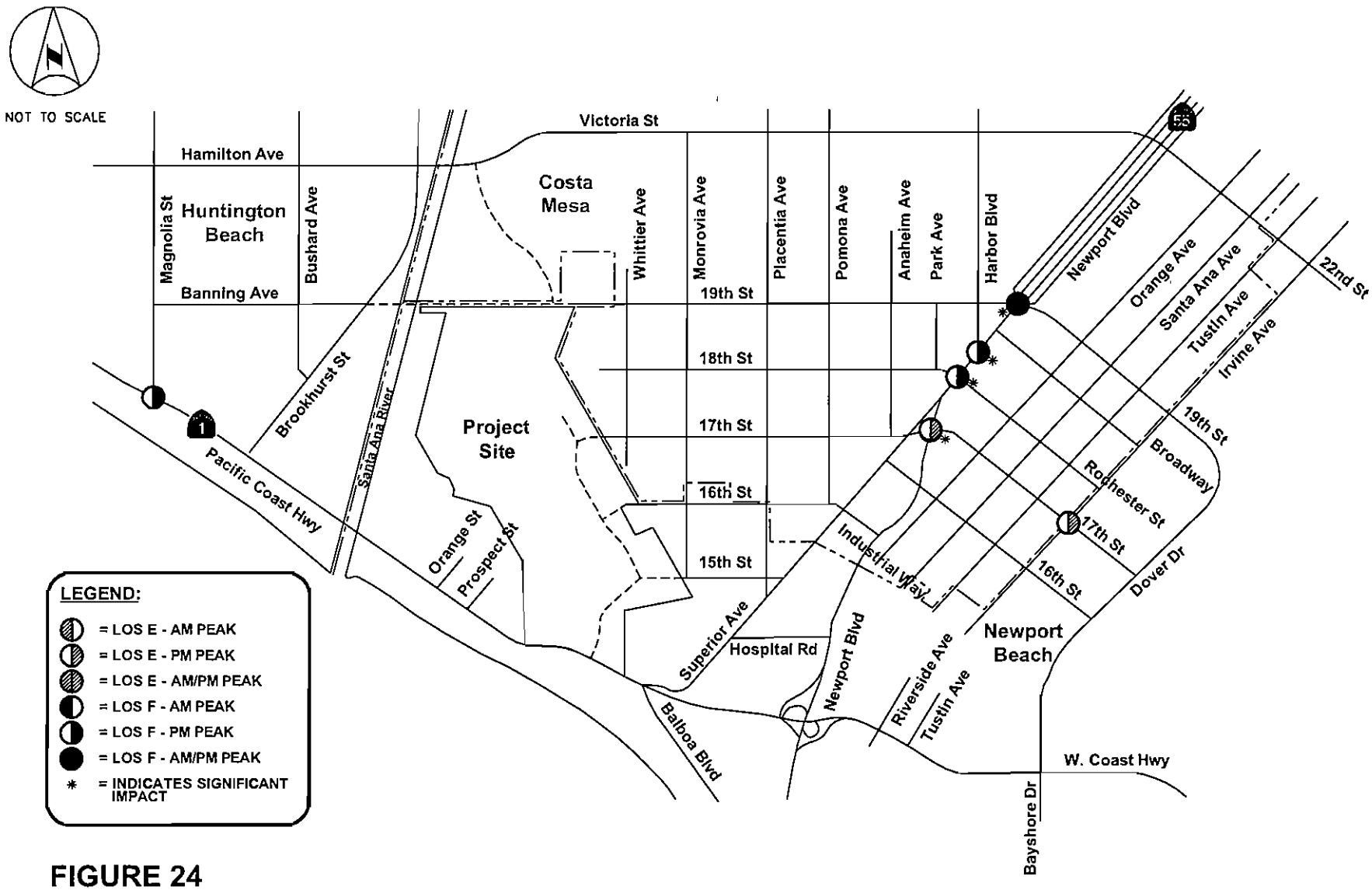

FIGURE 24
DEFICIENT INTERSECTIONS -
GENERAL PLAN BUILD-OUT WITH PROJECT -
BLUFF ROAD ALTERNATIVE

FILENAME: Jun 30, 2011 - 5:43pm K:\ORA_TPTO\ZSAC\Projects\Banning Ranch\CAD\8th Submittal.dwg

Kimley-Horn and Associates, Inc.

Costa Mesa Intersection (s):

- 34. Newport Boulevard at 19th Street (AM: LOS F – project impact 0.023)
- 36. Newport Boulevard at Harbor Boulevard (PM: LOS F – project impact 0.021)
- 37. Newport Boulevard at 18th Street/Rochester Street (PM: LOS F – project impact 0.016)
- 44. Newport Boulevard at 17th Street (PM: LOS E – project impact 0.012)

The Bluff Road Alternative would cause a significant impact at two additional intersections, compared to the Proposed Project. Eliminating the northerly segment of Bluff Road would result in an increase in both project traffic and area-wide traffic using 19th Street and other east-west streets to get to destinations to the west of the project site, resulting in increased delay at intersections along 17th, 18th, and 19th Street. A discussion of mitigation measures is provided in the Mitigation Section of this report.

General Plan Build-out with Project and Full MPAH Network

As proposed, the Newport Banning Ranch project would result in the need for an amendment to the City of Newport Beach Circulation Element and to the County of Orange Master Plan of Arterial Highways (MPAH). A copy of the City of Newport Beach Circulation Element in the vicinity of the project site is provided on **Figure 25**. A copy of the County of Orange Master Plan of Arterial Highways (MPAH) in the project vicinity is provided on **Figure 26**. The proposed Newport Banning Ranch project would result in the following network changes to these adopted plans:

- Bluff Road between 17th Street and 19th Street:
  - On the City of Newport Beach Circulation Element, this segment of Bluff Road is shown as a Primary Road (4-lane divided) roadway.
  - On the County MPAH, this segment of Bluff Road is shown as a Major (6-lane divided) roadway.
  - The proposed project site plan reflects this segment of Bluff Road as a 2-lane undivided roadway with reservation of right-of-way for a four-lane roadway.
  - As proposed by the project, the designation of Bluff Road as a future four-lane roadway would be consistent with the City of Newport Beach Circulation Element, but would require an amendment to the County MPAH.
  - The Project – Bluff Road Alternative reflects Bluff Road constructed only to the northerly limits of the development, with reservation of right-of-way for a four-lane roadway between the project development limits and 19th Street.

- The second roadway connection to West Coast Highway through the project site:
  - On the City of Newport Beach Circulation Element, this second connection is shown as the extension of 15th Street as a Primary (4-lane divided) roadway from Bluff Road to West Coast Highway.
  - On the County MPAH, the second connection is shown as the extension of 15th Street from Bluff Road to West Coast Highway as a Primary (4-lane divided) roadway, and the extension of 17th Street as a Secondary (4-lane undivided) roadway between Bluff Road and 15th Street.

NOT TO SCALE

LEGEND:

Blue	= Major (6-Lane Divided)
Red	= Primary (4-Lane Divided)
Yellow	= Secondary (4-Lane Undivided)
Green	= Commuter (2-Lane Undivided)
Dashed	= Roadway not yet built

FIGURE 25
CITY OF NEWPORT BEACH
MASTER PLAN OF STREETS AND HIGHWAYS

FILENAME: Jun 30, 2011 – 3:44pm K:\ORA_TPTO\ZSAC\Projects\Banning Ranch\CAD\8th Submittal.dwg

Kimley–Horn and Associates, Inc.

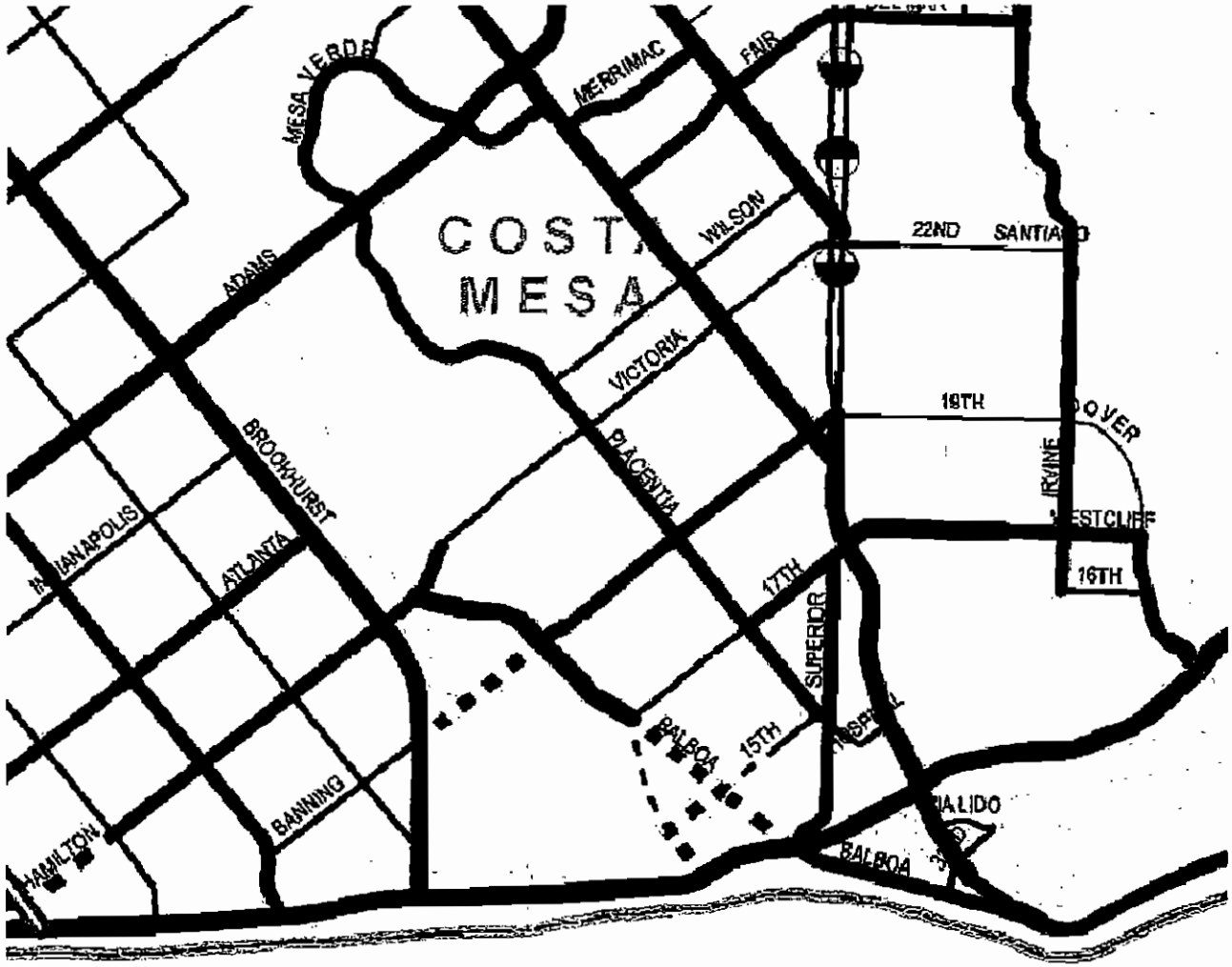

NOT TO SCALE

LEGEND:

Green = Principal (8-Lane Divided)
Red = Major (6-Lane Divided)
Blue = Primary (4-Lane Divided)
Black = Secondary (4-Lane Undivided)
Dashed = Proposed alignment

FIGURE 26
COUNTY OF ORANGE MPAH MAP IN THE PROJECT VICINITY

FILENAME: Jun 30, 2011 – 5:45pm K:\ORA_TPTD\ZSAC\Projects\Banning Ranch\CAD\8th Submittal.dwg

Kimley–Horn and Associates, Inc.

- The construction of a second roadway connection to West Coast Highway is not proposed as part of the Newport Banning Ranch project, and is not shown on the site plan for either the proposed project or the Bluff Road Alternative.

The Newport Banning Ranch Project – Bluff Road Alternative reflects the same network modifications affecting the second connection to Coast Highway, and would also include the reservation of right-of-way for the Bluff Road connection between 17th Street and 19th Street as a four-lane undivided roadway.

As proposed by the project and the project alternative, the elimination of the second connection to Coast Highway would not be consistent with either the City of Newport Beach Circulation Element or the County MPAH, and an amendment to both documents would need to be processed.

For information purposes, an analysis of General Plan Build-out Conditions with the proposed project, and assuming the full MPAH circulation network through the project site, which would include a second connection to West Coast Highway through the project site, was conducted to evaluate the need for the second connection. A summary of the results are presented here. A preliminary report previously submitted to OCTA to introduce the issue of the potential need for an MPAH amendment is provided in ***Appendix J***.

Table 22 summarizes General Plan Build-out with Project and Full MPAH Network peak hour intersection operations. The following study intersections would operate deficiently.

Newport Beach Intersection(s):

- 9. Newport Boulevard at Coast Highway (AM: LOS F)

Huntington Beach Intersection(s):

- 15. Brookhurst Street at Hamilton Avenue (PM: LOS E)
- 19. Magnolia Street at Pacific Coast Highway (PM: LOS F)
- 21. Brookhurst Street at Pacific Coast Highway (PM: LOS E)

Costa Mesa Intersection(s):

- 34. Newport Boulevard at 19th Street (AM and PM: LOS F)
- 36. Newport Boulevard at Harbor Boulevard (PM: LOS F)
- 37. Newport Boulevard at 18th Street/Rochester Street (PM: LOS F)
- 44. Newport Boulevard at 17th Street (PM: LOS E)
- 48. Irvine Avenue at 17th Street (PM: LOS E)
- 52. Bluff Road at Victoria Street (AM: LOS E)

Several of these intersections were forecasted to be deficient under the General Plan Build-out with Proposed Project scenario, assuming the transportation network as proposed by the project. The Full MPAH Network with 19th Street Bridge scenario would result in four additional deficient intersections:

TABLE 22
NEWPORT BANNING RANCH
SUMMARY OF INTERSECTION OPERATIONS
GENERAL PLAN BUILDOUT WITH PROJECT AND FULL MPAH NETWORK

		Intersection	AM Peak Hour		PM Peak Hour	
			ICU/ Delay	LOS	ICU/ Delay	LOS
Newport Beach	1	Monrovia Ave/16th St	0.31	A	0.35	A
	2	Placentia Ave/15th St	0.50	A	0.56	A
	3	Superior Ave/15th St	0.51	A	0.51	A
	4	Superior Ave/Placentia Ave	0.63	B	0.50	A
	5	Newport Blvd/Hospital Rd	0.63	B	0.75	C
	6	Orange St/W. Coast Hwy	0.74	C	0.77	C
	7	Prospect St/W. Coast Hwy	0.88	D	0.81	D
	8	Superior Ave/W. Coast Hwy	0.90	D	0.85	D
	9	Newport Blvd/W. Coast Hwy	0.89	D	0.69	B
	10	Riverside Ave/W. Coast Hwy	0.74	C	0.90	D
	11	Tustin Ave/W. Coast Hwy	0.61	A	0.84	D
	12	Dover Dr/W. Coast Hwy	0.79	C	0.90	D
Huntington Beach	13	Magnolia St/Hamilton Ave	0.73	C	0.74	C
	14	Bushard St/Hamilton Ave	0.51	A	0.63	B
	15	Brookhurst St/Hamilton Ave (Victoria St)	0.77	C	1.00	E
	16	Magnolia St/Banning Ave	0.61	B	0.51	A
	17	Bushard St/Banning Ave	0.69	B	0.76	C
	18	Brookhurst St/Banning Ave	0.45	A	0.51	A
	19	Magnolia St/Paeific Coast Hwy	0.82	D	1.18	F
	20	Brookhurst St/Bushard St	0.30	A	0.32	A
	21	Brookhurst St/Pacific Coast Hwy	0.73	C	0.91	E
Costa Mesa	22	Placentia Ave/Victoria St	0.71	C	0.81	D
	23	Pomona Ave/Victoria St	0.70	B	0.82	D
	24	Harbor Blvd/Victoria St	0.66	B	0.77	C
	25	Newport Blvd/Victoria St	0.48	A	0.44	A
	26	Newport Blvd /Victoria St (22nd St)	0.86	D	0.53	A
	27	Whittier Ave/19th St	0.84	D	0.78	C
	28	Monrovia Ave/19th St	0.79	C	0.75	C
	29	Placentia Ave/19th St	0.54	A	0.57	A
	30	Pomona Ave/19th St	0.57	A	0.73	C
	31	Anaheim Ave/19th St	0.57	A	0.68	B
	32	Park Ave/19th St	0.53	A	0.60	A
	33	Harbor Blvd/19th St	0.49	A	0.63	B
	34	Newport Blvd/19th St	1.08	F	1.03	F
	35	Newport Blvd/Broadway	0.69	B	0.87	D
	36	Newport Blvd/Harbor Blvd	0.78	C	1.12	F
	37	Newport Blvd/18th St (Rochester St)	0.82	D	1.09	F
	38	Placentia Ave/18th St	0.46	A	0.48	A
	39	Whittier Ave/17th St	0.41	A	0.52	A
	40	Monrovia Ave/17th St	0.34	A	0.44	A
	41	Placentia Ave/17th St	0.39	A	0.49	A
	42	Pomona Ave/17th St	0.51	A	0.54	A
	43	Superior Ave/17th St	0.80	C	0.80	C
	44	Newport Blvd/17th St	0.83	D	0.93	E
	45	Orange Ave/17th St	0.42	A	0.61	B
	46	Santa Ana Ave/17th St	0.43	A	0.51	A
	47	Tustin Ave/17th St	0.44	A	0.57	A
	48	Irvine Ave/17th St	0.64	B	0.91	E
	49	Placentia Ave/16th St	0.25	A	0.30	A
	50	Superior Ave/16th St	0.57	A	0.50	A
	51	Newport Blvd/16th St	0.68	B	0.75	C
	52	Bluff Rd/Victoria St	0.93	E	0.87	D

TABLE 22
NEWPORT BANNING RANCH
SUMMARY OF INTERSECTION OPERATIONS
GENERAL PLAN BUILDOUT WITH PROJECT AND FULL MPAH NETWORK

		Intersection	AM Peak Hour		PM Peak Hour	
			ICU/ Delay	LOS	ICU/ Delay	LOS
On-Site	53	Bluff Rd/19th St	0.64	B	0.72	C
	54	Bluff Rd/17th St	0.58	A	0.59	A
	55	Bluff Rd/16th St	0.25	A	0.33	A
	56	Bluff Rd/15th St	0.29	A	0.35	A
	57	Bluff Rd/W. Coast Hwy	0.79	C	0.82	D

Notes:
S = Signalized, U=Unsignalized
Bold and shaded values indicate intersections operating at LOS E or F.
Intersection operation is expressed in volume-to-capacity (v/c) for signalized intersections using the ICU Methodology.

- 9. Newport Boulevard at W. Coast Highway
- 15. Brookhurst Street at Hamilton Avenue
- 21. Brookhurst Street at Pacific Coast Highway
- 52. Bluff Road at Victoria Street

Review of the traffic forecasts and travel patterns for the Full MPAH Network with 19th Street Bridge scenario reveals that more traffic would use Bluff Road through the project site to get between Coast Highway and the river crossings with the full MPAH network in place than with the transportation network proposed by the Newport Banning Ranch project. The second connection to Coast Highway through the project site is also observed to draw more traffic through the site and onto Coast Highway toward Huntington Beach and Long Beach, resulting in higher through volumes on Coast Highway and Pacific Coast Highway. As the prior analyses showed, however, the additional roadway capacity through the site and the second connection to Coast Highway is not needed, and building the Full MPAH network would not relieve the deficiencies identified under previous scenarios.

General Plan Build-out – Open Space Alternative

The City of Newport Beach General Plan has a dual land use designation for the Banning Ranch property. The project site is designated OS(RV): Open Space / Residential Village. The OS(RV) land use designation allows for both the priority use (open space) and alternative use (residential village) of the site. An Open Space use of the site would include development of active community parks on a portion of the site, and assumes construction of Bluff Road from West Coast Highway to 19th Street.

An analysis of General Plan Build-out Conditions with the Open Space use of the site was conducted to provide an evaluation of peak hour conditions under the primary General Plan designation for the site. **Table 23** summarizes General Plan Build-out with the Open Space Alternative with Bluff Road AM and PM peak hour intersection operations. The following study intersections would operate deficiently.

Huntington Beach Intersection (s):

- 19. Magnolia Street at Pacific Coast Highway (PM: LOS F)

Costa Mesa Intersection (s):

- 34. Newport Boulevard at 19th Street (AM: LOS F, PM: LOS F)
- 36. Newport Boulevard at Harbor Boulevard (PM: LOS F)
- 37. Newport Boulevard at 18th Street/Rochester Street (PM: LOS F)
- 44. Newport Boulevard at 17th Street (PM: LOS E)
- 48. Irvine Avenue at 17th Street (PM: LOS E)

This list of deficient intersections is the same as the intersections forecasted to operate under deficient conditions under With Project conditions and the "No Development" alternative. While the Open Space alternative would result in lower ICU values as a result of fewer trips generated on the site, this alternative does not relieve over-capacity conditions at any of the intersections that are forecasted to be deficient in the With Project scenarios.

TABLE 23
NEWPORT BANNING RANCH
SUMMARY OF INTERSECTION OPERATIONS
GENERAL PLAN BUILDOUT - OPEN SPACE ALTERNATIVE WITH BLUFF ROAD

		Intersection	Control	AM Peak Hour		PM Peak Hour	
				ICU/ Delay	LOS	ICU/ Delay	LOS
Newport Beach	1	Monrovia Ave/16th St	S	0.31	A	0.32	A
	2	Placentia Ave/15th St	S	0.49	A	0.57	A
	3	Superior Ave/15th St	S	0.51	A	0.50	A
	4	Superior Ave/Placentia Ave	S	0.60	A	0.49	A
	5	Newport Blvd/Hospital Rd	S	0.63	B	0.75	C
	6	Orange St/W. Coast Hwy	S	0.77	C	0.81	D
	7	Prospect St/W. Coast Hwy	S	0.90	D	0.83	D
	8	Superior Ave/W. Coast Hwy	S	0.89	D	0.80	C
	9	Newport Blvd/W. Coast Hwy	S	0.88	D	0.83	D
	10	Riverside Ave/W. Coast Hwy	S	0.73	C	0.88	D
	11	Tustin Ave/W. Coast Hwy	S	0.60	A	0.83	D
	12	Dover Dr/W. Coast Hwy	S	0.78	C	0.90	D
Huntington Beach	13	Magnolia St/Hamilton Ave	S	0.73	C	0.74	C
	14	Bushard St/Hamilton Ave	S	0.53	A	0.65	B
	15	Brookhurst St/Hamilton Ave (Victoria St)	S	0.60	A	0.89	D
	16	Magnolia St/Banning Ave	S	0.62	B	0.50	A
	17	Bushard St/Banning Ave	S	0.71	C	0.77	C
	18	Brookhurst St/Banning Ave	S	0.48	A	0.54	A
	19	Magnolia St/Pacific Coast Hwy	S	0.83	D	1.17	F
	20	Brookhurst St/Bushard St	S	0.38	A	0.38	A
	21	Brookhurst St/Pacific Coast Hwy	S	0.76	C	0.89	D
Costa Mesa	22	Placentia Ave/Victoria St	S	0.72	C	0.81	D
	23	Pomona Ave/Victoria St	S	0.69	B	0.81	D
	24	Harbor Blvd/Victoria St	S	0.65	B	0.78	C
	25	Newport Blvd/Victoria St	S	0.48	A	0.44	A
	26	Newport Blvd /Victoria St (22nd St)	S	0.86	D	0.53	A
	27	Whittier Ave/19th St	S	0.52	A	0.55	A
	28	Monrovia Ave/19th St	S	0.50	A	0.48	A
	29	Placentia Ave/19th St	S	0.55	A	0.57	A
	30	Pomona Ave/19th St	S	0.57	A	0.73	C
	31	Anaheim Ave/19th St	S	0.57	A	0.66	B
	32	Park Ave/19th St	S	0.53	A	0.59	A
	33	Harbor Blvd/19th St	S	0.49	A	0.62	B
	34	Newport Blvd/19th St	S	1.06	F	1.01	F
	35	Newport Blvd/Broadway	S	0.69	B	0.85	D
	36	Newport Blvd/Harbor Blvd	S	0.79	C	1.11	F
	37	Newport Blvd/18th St (Rochester St)	S	0.82	D	1.07	F
	38	Placentia Ave/18th St	S	0.45	A	0.47	A
	39	Whittier Ave/17th St	S	0.35	A	0.41	A
	40	Monrovia Ave/17th St	S	0.31	A	0.42	A
	41	Placentia Ave/17th St	S	0.36	A	0.47	A
	42	Pomona Ave/17th St	S	0.44	A	0.50	A
	43	Superior Ave/17th St	S	0.77	C	0.81	D
	44	Newport Blvd/17th St	S	0.80	C	0.91	E
	45	Orange Ave/17th St	S	0.42	A	0.61	B
	46	Santa Ana Ave/17th St	S	0.41	A	0.51	A
	47	Tustin Ave/17th St	S	0.43	A	0.57	A
	48	Irvine Ave/17th St	S	0.64	B	0.91	E
	49	Placentia Ave/16th St	S	0.25	A	0.32	A
	50	Superior Ave/16th St	S	0.55	A	0.49	A
	51	Newport Blvd/16th St	S	0.68	B	0.75	C
	52	Bluff Rd/Victoria St	S	0.71	C	0.71	C

TABLE 23
NEWPORT BANNING RANCH
SUMMARY OF INTERSECTION OPERATIONS
GENERAL PLAN BUILDOUT - OPEN SPACE ALTERNATIVE WITH BLUFF ROAD

	Intersection		Control	AM Peak Hour		PM Peak Hour	
				ICU/ Delay	LOS	ICU/ Delay	LOS
On-Site	53	Bluff Rd/19th St	S	0.44	A	0.57	A
	54	Bluff Rd/17th St	S	0.56	A	0.65	B
	55	Bluff Rd/16th St	U	1.9	A	1.9	A
	56	Bluff Rd/15th St	S	0.31	A	0.51	A
	57	Bluff Rd/W. Coast Hwy	S	0.72	C	0.82	D

Notes:
S = Signalized, U=Unsignalized
Bold and shaded values indicate intersections operating at LOS E or F.
Intersection operation is expressed in average seconds of delay per vehicle during the peak hour for unsignalized intersections using the HCM 2000 Methodology and is expressed in volume-to-capacity (v/c) for signalized intersections using the ICU Methodology.

General Plan Build-out – Open Space Alternative without Bluff Road

A separate analysis of General Plan Build-out with the Open Space Alternative was conducted, this time without the construction of Bluff Road between West Coast Highway and 19th Street. The purpose of this scenario is to evaluate whether or not the Bluff Road connection through the project site would be needed if the site is not developed with the Residential Village uses. **Table 24** summarizes General Plan Build-out with Open Space Alternative without Bluff Road AM and PM peak hour intersection operations.

Under this scenario, the following study intersections are forecasted to operate deficiently:

Huntington Beach Intersection (s):

- 19. Magnolia Street at Pacific Coast Highway (PM: LOS F)

Costa Mesa Intersection (s):

- 34. Newport Boulevard at 19th Street (AM: LOS F, PM: LOS F)
- 36. Newport Boulevard at Harbor Boulevard (PM: LOS F)
- 37. Newport Boulevard at 18th Street/Rochester Street (PM: LOS F)
- 44. Newport Boulevard at 17th Street (PM: LOS E)
- 48. Irvine Avenue at 17th Street (PM: LOS E)

All other study intersections would continue to operate within acceptable standards in both peak hours.

This list of deficient intersections is the same as the list of intersections forecasted to operate deficiently under General Plan Build-out with Open Space with Bluff Road. These results indicate that the future deficient peak hour conditions would occur with or without the Bluff Road connection through the project site, and that constructing Bluff Road between West Coast Highway and 19th Street would not provide relief for these deficient intersections. This conclusion supports the No Development Alternative assumption that no on-site roadways would be needed if the Banning Ranch property is not developed with the Residential Village uses.

TABLE 24
NEWPORT BANNING RANCH
SUMMARY OF INTERSECTION OPERATIONS
GENERAL PLAN BUILDOUT - OPEN SPACE ALTERNATIVE WITHOUT BLUFF ROAD

		Intersection	Control	AM Peak Hour		PM Peak Hour	
				ICU/ Delay	LOS	ICU/ Delay	LOS
Newport Beach	1	Monrovia Ave/16th St	S	0.32	A	0.31	A
	2	Placentia Ave/15th St	S	0.43	A	0.60	A
	3	Superior Ave/15th St	S	0.38	A	0.46	A
	4	Superior Ave/Placentia Ave	S	0.65	B	0.62	B
	5	Newport Blvd/Hospital Rd	S	0.67	B	0.79	C
	6	Orange St/W. Coast Hwy	S	0.76	C	0.80	C
	7	Prospect St/W. Coast Hwy	S	0.90	D	0.85	D
	8	Superior Ave/W. Coast Hwy	S	0.86	D	0.81	D
	9	Newport Blvd/W. Coast Hwy	S	0.87	D	0.83	D
	10	Riverside Ave/W. Coast Hwy	S	0.72	C	0.87	D
	11	Tustin Ave/W. Coast Hwy	S	0.59	A	0.82	D
	12	Dover Dr/W. Coast Hwy	S	0.78	C	0.90	D
Huntington Beach	13	Magnolia St/Hamilton Ave	S	0.73	C	0.73	C
	14	Bushard St/Hamilton Ave	S	0.54	A	0.65	B
	15	Brookhurst St/Hamilton Ave (Victoria St)	S	0.59	A	0.83	D
	16	Magnolia St/Banning Ave	S	0.59	A	0.49	A
	17	Bushard St/Banning Ave	S	0.67	B	0.73	C
	18	Brookhurst St/Banning Ave	S	0.46	A	0.50	A
	19	Magnolia St/Pacific Coast Hwy	S	0.84	D	1.23	F
	20	Brookhurst St/Bushard St	S	0.40	A	0.42	A
	21	Brookhurst St/Pacific Coast Hwy	S	0.77	C	0.90	D
Costa Mesa	22	Placentia Ave/Victoria St	S	0.74	C	0.83	D
	23	Pomona Ave/Victoria St	S	0.68	B	0.82	D
	24	Harbor Blvd/Victoria St	S	0.66	B	0.79	C
	25	Newport Blvd/Victoria St	S	0.48	A	0.43	A
	26	Newport Blvd /Victoria St (22nd St)	S	0.87	D	0.53	A
	27	Whittier Ave/19th St	S	0.64	B	0.72	C
	28	Monrovia Ave/19th St	S	0.56	A	0.49	A
	29	Placentia Ave/19th St	S	0.60	A	0.58	A
	30	Pomona Ave/19th St	S	0.57	A	0.73	C
	31	Anaheim Ave/19th St	S	0.58	A	0.66	B
	32	Park Ave/19th St	S	0.53	A	0.59	A
	33	Harbor Blvd/19th St	S	0.50	A	0.63	B
	34	Newport Blvd/19th St	S	1.07	F	1.01	F
	35	Newport Blvd/Broadway	S	0.69	B	0.85	D
	36	Newport Blvd/Harbor Blvd	S	0.80	C	1.11	F
	37	Newport Blvd/18th St (Rochester St)	S	0.82	D	1.09	F
	38	Placentia Ave/18th St	S	0.51	A	0.52	A
	39	Whittier Ave/17th St	S	0.18	A	0.22	A
	40	Monrovia Ave/17th St	S	0.30	A	0.42	A
	41	Placentia Ave/17th St	S	0.40	A	0.55	A
	42	Pomona Ave/17th St	S	0.44	A	0.51	A
	43	Superior Ave/17th St	S	0.76	C	0.81	D
	44	Newport Blvd/17th St	S	0.80	C	0.92	E
	45	Orange Ave/17th St	S	0.42	A	0.62	B
	46	Santa Ana Ave/17th St	S	0.42	A	0.50	A
	47	Tustin Ave/17th St	S	0.44	A	0.58	A
	48	Irvine Ave/17th St	S	0.65	B	0.92	E
	49	Placentia Ave/16th St	S	0.26	A	0.32	A
	50	Superior Ave/16th St	S	0.55	A	0.51	A
	51	Newport Blvd/16th St	S	0.68	B	0.75	C
	52	Bluff Rd/Victoria St	S	0.65	B	0.68	B

TABLE 24
NEWPORT BANNING RANCH
SUMMARY OF INTERSECTION OPERATIONS
GENERAL PLAN BUILDOUT - OPEN SPACE ALTERNATIVE WITHOUT BLUFF ROAD

		Intersection	Control	AM Peak Hour		PM Peak Hour	
				ICU/ Delay	LOS	ICU/ Delay	LOS
On-Site	53	Bluff Rd/19th St	S	0.50	A	0.58	A
	54	Bluff Rd/17th St	N/A				
	55	Bluff Rd/16th St					
	56	Bluff Rd/15th St					
	57	Bluff Rd/W. Coast Hwy					

Notes:
S = Signalized, U=Unsignalized
Bold and shaded values indicate intersections operating at LOS E or F.
Intersection operation is expressed in average seconds of delay per vehicle during the peak hour for unsignalized intersections using the HCM 2000 Methodology and is expressed in volume-to-capacity (v/c) for signalized intersections using the ICU Methodology.

PROJECT IMPACT MITIGATION

The project traffic impact is determined to be significant if the project traffic causes an unacceptable Level of Service, or causes the ICU value at an intersection already operating at an unacceptable Level of Service (LOS E or LOS F) to increase by 0.01 or more. The following discussion identifies the intersections where the project would cause a significant impact for each study scenario, and provides recommended mitigation measures to reduce the project impact to a less-than-significant level.

Mitigation measures for intersections in the City of Huntington Beach or Costa Mesa will be subject to the approval of that city. In addition, mitigation measures at intersections located on a State Highway will be subject to the review and approval of Caltrans. Copies of intersection worksheets and conceptual plans for each proposed mitigation improvement are provided in ***Appendix K.***

Project Impact Mitigation – Existing Plus Project

Existing Plus Project

Table 4 (presented previously) indicates that for Existing Plus Project conditions, the proposed project would result in a significant impact at the following intersections:

Costa Mesa Intersection (s):

- 36. Newport Boulevard at Harbor Boulevard (PM: LOS F – project impact 0.079)
- 37. Newport Boulevard at 18th Street/Rochester Street (PM: LOS F – project impact 0.080).
- 43. Superior Avenue at 17th Street (PM: LOS E – project impact 0.165)

The following intersection improvements have been identified to mitigate the project impact:

- ***36. Newport Boulevard at Harbor Boulevard***: Improve the southbound approach of Newport Boulevard to provide three through lanes and one shared through/right-turn lane, and improve the south leg to accommodate a fourth receiving lane. The southbound improvement would require right-of-way acquisition.
- ***37. Newport Boulevard at 18th Street/Rochester Street***: Improve the southbound approach of Newport Boulevard to provide a through/right-turn lane, and improve the south leg to accommodate a fourth receiving lane. The southbound improvement would require right-of-way acquisition. This improvement has been conditioned on the Hoag Health Center project.
- ***43. Superior Avenue at 17th Street:*** Modify the westbound approach to provide one left, one shared through/left, one through, and one right-turn lane. This will require split phasing signal operation. This improvement has been conditioned on the Hoag Health Center project.

A summary of these mitigation measures and the resulting Level of Service are shown on **Table 25.**

Existing Plus Project – Bluff Road Alternative

Table 5 (presented previously) indicates that for Existing Plus Project – Bluff Road Alternative conditions, the proposed project would result in a significant impact at the following intersections:

Costa Mesa Intersection (s):

- 36. Newport Boulevard at Harbor Boulevard (PM: LOS F – project impact 0.099)
- 37. Newport Boulevard at 18th Street/Rochester Street (PM: LOS F – project impact 0.045)
- 42. Pomona Avenue at 17th Street (PM: LOS E – project impact, LOS E at an unsignalized intersection)
- 43. Superior Avenue at 17th Street (PM: LOS E – project impact 0.196)

The same improvements previously identified for the Existing Plus Project conditions for intersections 36, 37, and 43 would mitigate the Existing Plus Project – Bluff Road Alternative condition. The following intersection improvement would mitigate the project impact at Intersection 42.

- ***42. Pomona Avenue at 17th Street:*** Install a traffic signal.

A summary of these mitigation measures and the resulting Level of Service are shown on Table 25 (presented previously).

TABLE 25
EXISTING PLUS PROJECT & EXISTING PLUS PROJECT - BLUFF ROAD ALTERNATIVE
IMPACT MITIGATION

	Intersection	Existing Plus Proposed Project					Existing Plus Proposed Project - Bluff Road Alternative				
		Peak Hour	Without Mitigation		With Mitigation		Peak Hour	Without Mitigation		With Mitigation	
			ICU/HCM	LOS	ICU/HCM	LOS		ICU/HCM	LOS	ICU/HCM	LOS
36	Newport Blvd / Harbor Blvd	PM	1.05	F	0.87	D	PM	1.07	F	0.89	D
		Add fourth southbound through lane on Newport Boulevard.					Add fourth southbound through lane on Newport Boulevard.				
37	Newport Blvd / 18th St (Rochester St)	PM	1.05	F	0.88	D	PM	1.07	F	0.91	E
		Convert southbound right-turn lane a shared through/right lane on Newport Boulevard.					Convert southbound right-turn lane a shared through/right lane on Newport Boulevard.				
42	Pomona Avenue / 17th Street	Not Significantly Impacted in this Scenario					PM	39.0	E	0.52	A
							Install signal				
43	Superior Ave. / 17th Street	PM	0.91	E	0.81	D	PM	0.94	E	0.83	D
		Convert westbound approaeh to provide one left, one shared/left, one through, and one dedicated right-turn lane.					Convert westbound approach to provide one left, one shared/left, one through, and one dedicated right-turn lane.				

Project Impact Mitigation – Traffic Phasing Ordinance (TPO)

Year 2016 with Proposed Project – TPO

Table 9 (presented previously) indicates that for Year 2016 with Proposed Project – TPO conditions, the proposed project would result in a significant impact at the following intersections:

Newport Beach Intersection (s):

- 9. Newport Boulevard at West Coast Highway (AM: LOS E – project impact 0.024)

Costa Mesa Intersection (s):

- 28. Monrovia Avenue at 19th Street (AM: LOS E – project impact, LOS E operations)
- 34. Newport Boulevard at 19th Street (AM: LOS E – project impact 0.51)
- 36. Newport Boulevard at Harbor Boulevard (PM: LOS F – project impact 0.079)
- 37. Newport Boulevard at 18th Street/Rochester Street (PM: LOS F – project impact 0.080).
- 42. Pomona Avenue at 17th Street (PM: LOS E – project impact, LOS E operations)
- 43. Superior Avenue at 17th Street (PM: LOS E – project impact 0.165)
- 44. Newport Boulevard at 17th Street (PM: LOS E – project impact 0.036)

The following intersection improvements have been identified to mitigate the project impact:

- ***9. Newport Boulevard at West Coast Highway***: Re-stripe the southbound approach on Newport Boulevard to provide one exclusive right-turn lane, one exclusive left-turn lane, and one shared right/left-turn lane.
- ***28. Monrovia Avenue at 19th Street***: Install a traffic signal.
- ***34. Newport Boulevard at 19th Street:*** Add a second southbound left-turn lane.
- ***36. Newport Boulevard at Harbor Boulevard***: Improve the southbound approach of Newport Boulevard to provide three through lanes and one shared through/right-turn lane, and improve the south leg to accommodate a fourth receiving lane. The southbound improvement would require right-of-way acquisition.
- ***37. Newport Boulevard at 18th Street/Rochester Street***: Improve the southbound approach of Newport Boulevard to provide a through/right-turn lane, and improve the south leg to accommodate a fourth receiving lane. The southbound improvement would require right-of-way acquisition. This improvement has been conditioned on the Hoag Health Center project.
- ***42. Pomona Avenue at 17th Street:*** Install a traffic signal.
- ***43. Superior Avenue at 17th Street:*** Modify the westbound approach to provide one left, one shared through/left, one through, and one right-turn lane. This will require split phasing signal operation. This improvement has been conditioned on the Hoag Health Center project.
- ***44. Newport Boulevard at 17th Street:*** Add a fourth through lane on the southbound approach, and a dedicated right-turn lane on the northbound approach.

A summary of these mitigation measures and the resulting Level of Service are shown on **Table 26**.

TABLE 26
YEAR 2016 WITH PROPOSED PROJECT - TPO ANALYSIS & BLUFF ROAD ALTERNATIVE
IMPACT MITIGATION

	Intersection	Year 2016 With Project - TPO Analysis					Year 2016 W / Project - Bluff Rd Alt. - TPO Analysis				
		Peak Hour	Without Mitigation		With Mitigation		Peak Hour	Without Mitigation		With Mitigation	
			ICU/HCM	LOS	ICU/HCM	LOS		ICU/HCM	LOS	ICU/HCM	LOS
9	Newport Blvd/W. Coast Hwy	AM	0.93	E	0.88	D	AM	0.93	E	0.87	D
		Restripe southbound approach to provide a right-turn lane, shared right/left-turn lane, and left-turn lane on Newport Boulevard.					Restripe southbound approach to provide a right-turn lane, shared right/left-turn lane, and left-turn lane on Newport Blvd.				
28	Monrovia Ave / 19th Street	AM	36.4	E	0.60	A	Not Significantly Impacted in this Scenario				
		Install signal									
34	Newport Blvd / 19th Street	AM	0.91	E	0.85	D	Not Significantly Impacted in this Scenario				
		Add a second southbound left-turn lane on Newport Boulevard.									
36	Newport Blvd/Harbor Blvd	PM	1.14	F	1.01	F	PM	1.16	F	0.96	E
		Add fourth southbound through lane on Newport Boulevard.					Add fourth southbound through lane on Newport Boulevard.				
37	Newport Blvd / 18th St (Rochester St)	PM	1.15	F	0.97	E	PM	1.17	F	0.99	E
		Convert southbound right-turn lane a shared through/right lane on Newport Boulevard.					Convert southbound right-turn lane a shared through/right lane on Newport Boulevard.				
42	Pomona Avenue / 17th Street	PM	46.3	E	0.54	A	PM	51.3	F	0.55	A
		Install signal					Install signal				
43	Superior Ave. / 17th Street	PM	0.98	E	0.87	D	PM	1.01	F	0.89	D
		Convert westbound approach to provide one left, one shared/left, one through, and one dedicated right-turn lane.					Convert westbound approach to provide one left, one shared/left, one through, and one dedicated right-turn lane.				
44	Newport Blvd. / 17th Street	PM	0.91	E	0.88	D	PM	0.93	E	0.90	D
		Add fourth southbound through lane and one dedicated northbound right-turn lane.					Add dedicated northbound right-turn lane.				

Year 2016 with Project – Bluff Road Alternative – TPO

Table 10 (presented previously) indicates that for Year 2016 with Project – Bluff Road Alternative – TPO Analysis, the proposed Newport Banning Ranch project will result in a significant impact at the following study intersections:

Newport Beach Intersection (s):

- 9. Newport Boulevard at West Coast Highway (AM: LOS E – project impact 0.021)

Costa Mesa Intersection (s):

- 36. Newport Boulevard at Harbor Boulevard (PM: LOS F – project impact 0.099)
- 37. Newport Boulevard at 18th Street/Rochester Street (PM: LOS F – project impact 0.100)
- 42. Pomona Avenue at 17th Street (PM: LOS E – project impact, LOS E operations)
- 43. Superior Avenue at 17th Street (PM: LOS F – project impact 0.196)
- 44. Newport Boulevard at 17th Street (PM: LOS E – project impact 0.053)

The same intersection improvements previously identified for the significantly impacted intersections for the Year 2016 with Proposed Project conditions would mitigate the Year 2016 Project – Bluff Road Alternative impacts. A summary of these mitigation measures and the resulting Level of Service are shown on Table 26, previously referenced.

Year 2016 with Phase 1 Project – TPO

Table 11 (presented previously) indicates that for Year 2016 with Phase 1 Project – TPO Analysis, Phase 1 of the project will result in a significant impact at the following study intersections:

Newport Beach Intersection (s):

- 9. Newport Boulevard at West Coast Highway (AM: LOS E – project impact, LOS E operations)

Costa Mesa Intersection (s):

- 36. Newport Boulevard at Harbor Boulevard (PM: LOS F – project impact 0.012)
- 37. Newport Boulevard at 18th Street/Rochester Street (PM: LOS F – project impact 0.013).

The same intersection improvements previously identified for the Year 2016 with Proposed Project conditions would mitigate the Phase 1 impacts. A summary of these recommended mitigation measures and the resulting Level of Service are shown on **Table 27**.

TABLE 27
YEAR 2016 WITH PHASE 1 PROJECT - TPO ANALYSIS
IMPACT MITIGATION

Intersection		Peak Hour	Without Mitigation		With Mitigation	
			ICU/HCM	LOS	ICU/HCM	LOS
9	Newport Blvd/W. Coast Hwy	AM	0.91	E	0.86	D
		Restripe southbound approach to provide a right-turn lane, shared right/left-turn lane, and left-turn lane on Newport Boulevard.				
36	Newport Blvd/Harbor Blvd	PM	1.07	F	0.90	D
		Add fourth southbound through lane on Newport Boulevard.				
37	Newport Blvd/18th St (Rochester St)	PM	1.09	F	0.91	E
		Convert southbound right-turn lane a shared through/right lane on Newport Boulevard.				

Project Impact Mitigation – Year 2016 Cumulative Conditions

Year 2016 Cumulative Conditions with Proposed Project

Table 15 (presented previously) indicates that for Year 2016 Cumulative Conditions with Proposed Project, the proposed Newport Banning Ranch project would result in a significant impact at the following intersections:

Newport Beach Intersection (s):

- 9. Newport Boulevard at West Coast Highway (AM: LOS E – project impact 0.024)

Costa Mesa Intersection (s):

- 28. Monrovia Avenue at 19th Street (AM: LOS E – project impact, LOS E operations)
- 34. Newport Boulevard at 19th Street (PM: LOS E – project impact 0.050)
- 36. Newport Boulevard at Harbor Boulevard (PM: LOS F – project impact 0.080)
- 37. Newport Boulevard at 18th Street/Rochester Street (PM: LOS F – project impact 0.080)
- 42. Pomona Avenue at 17th Street (PM: LOS E – project impact, LOS E operations)
- 43. Superior Avenue at 17th Street (PM: LOS F – project impact 0.165)
- 44. Newport Boulevard at 17th Street (PM: LOS E – project impact 0.039)

The same intersection improvements previously identified for the TPO Analysis scenarios will also mitigate Year 2016 Cumulative with Proposed Project impacts. A summary of these recommended mitigation measures and the resulting Level of Service are shown on **Table 28**.

Year 2016 Cumulative Conditions with Project – Bluff Road Alternative

Table 17 (presented previously) indicates that for Year 2016 Cumulative Conditions with Project – Bluff Road Alternative, the proposed project would result in a significant impact at the following intersections:

Newport Beach Intersection (s):

- 9. Newport Boulevard at West Coast Highway (AM: LOS E – project impact 0.022)

Costa Mesa Intersection (s):

- 34. Newport Boulevard at 19th Street (AM: LOS E – project impact 0.047)
- 36. Newport Boulevard at Harbor Boulevard (PM: LOS F – project impact 0.100)
- 37. Newport Boulevard at 18th Street/Rochester Street (PM: LOS F – project impact 0.100)
- 42. Pomona Avenue at 17th Street (PM: LOS E – project impact, LOS F operations)
- 43. Superior Avenue at 17th Street (PM: LOS E – project impact 0.196)
- 44. Newport Boulevard at 17th Street (PM: LOS E – project impact 0.055)

The same intersection improvements previously identified for the TPO Analysis scenarios will also mitigate Year 2016 Cumulative with Proposed Project impacts. A summary of these recommended mitigation measures and the resulting Level of Service are shown on **Table 29**.

TABLE 28
YEAR 2016 CUMULATIVE WITH PROPOSED PROJECT
IMPACT MITIGATION

Intersection		Peak Hour	Without Mitigation		With Mitigation	
			ICU/HCM	LOS	ICU/HCM	LOS
9	Newport Blvd/W. Coast Hwy	AM	0.96	E	0.91	E
		Restripe southbound approach to provide a right-turn lane, shared right/left-turn lane, and left-turn lane on Newport Boulevard.				
28	Monrovia Ave / 19th Street	AM	39.2	E	0.61	B
		Install signal				
34	Newport Blvd / 19th Street	AM	0.91	E	0.85	D
		Add a second southbound left-turn lane on Newport Boulevard.				
36	Newport Blvd/Harbor Blvd	PM	1.15	F	0.95	E
		Add fourth southbound through lane on Newport Boulevard.				
37	Newport Blvd/18th St (Rochester St)	PM	1.16	F	0.98	E
		Convert southbound right-turn lane a shared through/right lane on Newport Boulevard.				
42	Pomona Avenue / 17th Street	PM	53.3	E	0.56	A
		Install signal				
43	Superior Ave. / 17th Street	PM	0.98	E	0.88	D
		Convert westbound approach to provide one left, one shared/left, one through, and one dedicated right-turn lane.				
44	Newport Blvd. / 17th Street	PM	0.92	E	0.89	D
		Add fourth southbound through lane and one dedicated northbound right-turn lane.				

TABLE 29
YEAR 2016 CUMULATIVE WITH PROJECT - BLUFF ROAD ALTERNATIVE
IMPACT MITIGATION

Intersection		Peak Hour	Without Mitigation		With Mitigation	
			ICU/HCM	LOS	ICU/HCM	LOS
9	Newport Blvd/W. Coast Hwy	AM	0.96	E	0.91	E
		Restripe southbound approach to provide a right-turn lane, shared right/left-turn lane, and left-turn lane on Newport Boulevard.				
34	Newport Blvd / 19th	AM	0.91	E	0.85	D
		Add a second southbound left-turn lane on Newport Boulevard.				
36	Newport Blvd/Harbor Blvd	PM	1.17	F	0.97	E
		Add fourth southbound through lane on Newport Boulevard.				
37	Newport Blvd/18th St (Rochester St)	PM	1.18	F	1.00	E
		Convert southbound right-turn lane a shared through/right lane on Newport Boulevard.				
42	Pomona Avenue / 17th Street	PM	58.4	F	0.57	A
		Install signal				
43	Superior Ave. / 17th Street	PM	1.02	F	0.90	D
		Convert westbound approach to provide one left, one shared/left, one through, and one dedicated right-turn lane.				
44	Newport Blvd. / 17th Street	PM	0.93	E	0.90	D
		Add fourth southbound through lane and one dedicated northbound right-turn lane.				

Year 2016 Cumulative Conditions with Phase 1 Project

Table 18 (presented previously) indicates that for Year 2016 Cumulative Conditions with Phase 1 Project, the proposed Newport Banning Ranch project will result in a significant impact at the following study intersections:

Costa Mesa Intersection (s):

- 36. Newport Boulevard at Harbor Boulevard (PM: LOS F)
- 37. Newport Boulevard at 18th Street/Rochester Street (PM: LOS F)

The same intersection improvements previously identified for the TPO analysis would mitigate the Year 2016 Cumulative with Phase 1 Project impacts. A summary of these recommended mitigation measures and the resulting Level of Service are shown on **Table 30**.

Project Impact Mitigation – General Plan Build-out Analysis

General Plan Build-out with Proposed Project

Table 20 (presented previously) indicates that for General Plan Build-out with Proposed Project, the proposed Newport Banning Ranch project will result in a significant impact at the following intersections:

Costa Mesa Intersection (s):

- 34. Newport Boulevard at 19th Street (AM: LOS F)
- 36. Newport Boulevard at Harbor Boulevard (PM: LOS F)

The following intersection improvements have been identified to mitigate the project impacts:

- ***34. Newport Boulevard at 19th Street***: Provide a second southbound left-turn lane on Newport Boulevard.
- ***36. Newport Boulevard at Harbor Boulevard***: Improve the southbound approach of Newport Boulevard to provide three through lanes and one shared through/right-turn lane, and improve the south leg to accommodate a fourth receiving lane. The southbound improvement would require right-of-way acquisition.

A summary of these recommended mitigation measures and the resulting Level of Service are shown on **Table 31**.

TABLE 30
YEAR 2016 CUMULATIVE WITH PHASE 1 PROJECT
IMPACT MITIGATION

Intersection		Peak Hour	Without Mitigation		With Mitigation	
			ICU/HCM	LOS	ICU/HCM	LOS
36	Newport Blvd/Harbor Blvd	PM	1.07	F	0.90	D
		Add fourth southbound through lane on Newport Boulevard.				
37	Newport Blvd/18th St (Rochester St)	PM	1.09	F	0.91	E
		Convert southbound right-turn lane a shared through/right lane on Newport Boulevard.				

TABLE 31
GENERAL PLAN BUILD-OUT WITH PROPOSED PROJECT
IMPACT MITIGATION

Intersection		Peak Hour	Without Mitigation		With Mitigation	
			ICU	LOS	ICU	LOS
34	Newport Blvd/19th St	AM	1.01	F	0.99	E
		Add second southbound left-turn lane on Newport Boulevard.				
36	Newport Blvd/Harbor Blvd	PM	1.12	F	0.92	E
		Add fourth southbound through lane on Newport Boulevard.				

General Plan Build-out with Project – Bluff Road Alternative

Table 21 (presented previously) indicates that for General Plan Build-out with Project – Bluff Road Alternative, the proposed Newport Banning Ranch project will result in a significant impact at the following intersections:

Costa Mesa Intersection (s):

- 34. Newport Boulevard at 19th Street (AM: LOS F)
- 36. Newport Boulevard at Harbor Boulevard (PM: LOS F)
- 37. Newport Boulevard at 18th Street/Rochester Street (PM: LOS F)
- 44. Newport Boulevard at 17th Street (PM: LOS E)

The following intersection improvements have been identified to mitigate the project impact:

- ***34. Newport Boulevard at 19th Street***: Provide a second southbound left-turn lane on Newport Boulevard.
- ***36. Newport Boulevard at Harbor Boulevard***: Improve the southbound approach of Newport Boulevard to provide three through lanes and one shared through/right-turn lane, and improve the south leg to accommodate a fourth receiving lane. The southbound improvement would require right-of-way acquisition.
- ***37. Newport Boulevard at 18th Street/Rochester Street***: Improve the southbound approach of Newport Boulevard to provide a through/right-turn lane, and improve the south leg to accommodate a fourth receiving lane. The southbound improvement would require right-of-way acquisition.
- ***44. Newport Boulevard at 17th Street***: Provide a fourth southbound through lane on Newport Boulevard.

A summary of these recommended mitigation measures and the resulting Level of Service are shown on **Table 32.**

TABLE 32
GENERAL PLAN BUILD-OUT WITH PROJECT - BLUFF ROAD ALTERNATIVE IMPACT MITIGATION

Intersection		Peak Hour	Without Mitigation		With Mitigation	
			ICU	LOS	ICU	LOS
34	Newport Blvd/19th St	AM	1.09	F	1.00	E
		Add second southbound left-turn lane on Newport Boulevard.				
36	Newport Blvd/Harbor Blvd	PM	1.13	F	0.93	E
		Add fourth southbound through lane on Newport Blvd.				
37	Newport Blvd/18th St (Rochester St)	PM	1.10	F	0.93	E
		Convert southbound right-turn lane to a southbound shared through/right lane.				
44	Newport Blvd/17th St	PM	0.93	E	0.89	D
		Assumes the addition of a fourth southbound through lane on Newport Boulevard.				

PROJECT RESPONSIBILITY FOR IMPACT MITIGATION

The project will be required to participate in the funding of improvements at significantly impacted intersections on a fair-share basis. For any mitigation improvements identified for intersections in the City of Huntington Beach or City of Costa Mesa, the project applicant will need to work with the appropriate city on project responsibility for improvement timing, cost, and fair-share responsibility.

City of Newport Beach TPO Effective Capacity Fair Share Determination

For significant project impacts at intersections in the City of Newport Beach, the City's Traffic Phasing Ordinance (Chapter 15.40 of the Municipal Code) and the Fair Share Traffic Contribution Ordinance (Chapter 15.38 of the Municipal Code) apply. In order to determine the project's responsibility to the intersection improvements the TPO requires the determination of the "effective capacity increase" that would result from the proposed mitigation measure, and the "effective capacity decrease" that would result from the addition of project-related traffic, as follows:

- To determine the "effective capacity increase" that would be achieved by implementing a recommended mitigation measure, the ***Improved without Project ICU*** is subtracted from the ***Future without Project ICU.***

- To determine the "effective capacity decrease" attributable to project trips, the ***Improved without Project ICU*** is subtracted from the ***Improved with Project ICU.***

- The project fair-share responsibility for the mitigation measure is calculated by dividing the "effective capacity decrease" by the "effective capacity increase".

The intersection of Newport Boulevard and West Coast Highway is the only intersection in the City of Newport Beach that would require mitigation by the project. The results of the effective capacity analysis, which includes the resulting Level of Service with the proposed mitigation, and the project proportional responsibility for that mitigation, are provided in **Table 33.**

TABLE 33
TRAFFIC PHASING ORDINANCE
EFFECTIVE CAPACITY FAIR SHARE CALCULATION

	Intersection	Peak Hour	Future w/o Project		Improved w/o Proj		Effective Capacity Increase	Improved w/ Proj		Effective Capacity Decrease	Project Responsibility (Dec. / Inc.)
			ICU	LOS	ICU	LOS		ICU	LOS		
9. Newport Boulevard/West Coast Highway [1]											
Scenario	Year 2016 with Proposed Project - TPO Analysis	AM	0.903	D	0.852	D	0.051	0.875	D	0.023	45.1%
Scenario	Year 2016 with Project - Bluff Road Alternative - TPO Analysis	AM	0.903	D	0.852	D	0.051	0.873	D	0.021	41.2%
Scenario	Year 2016 with Phase 1 Project - TPO Analysis	AM	0.903	D	0.852	D	0.051	0.857	D	0.005	9.8%

[1] Mitigation measure: Restripe the southbound approach on Newport Boulevard to provide one exclusive right-turn lane, one shared right/left-turn lane, and one exclusive left-turn lane.

CONGESTION MANAGEMENT PROGRAM (CMP)

The Orange County Congestion Management Program (CMP) was established in 1991 to reduce traffic congestion and to provide a mechanism for coordinating land use and development decisions. Compliance with the CMP requirements ensures a city's eligibility to compete for State gas tax funds for local transportation projects.

A copy of the County of Orange CMP Highway System map is provided on **Figure 27**. Within the project vicinity, the CMP Highway System includes two arterials: Newport Boulevard and Pacific Coast Highway/West Coast Highway. The intersection of Newport Boulevard at West Coast Highway is the only CMP intersection in the project study area. This intersection is one of the study intersections included in the Traffic Analysis.

The Orange County CMP states that "a TIA will be required for CMP purposes for all proposed developments generating 2,400 or more daily trips," and that "for developments which will directly access a CMP Highway System link, the threshold for requiring a TIA should be reduced to 1,600 or more trips per day". The project is estimated to generate between 1,868 (Phase 1) and 13,327 (full Newport 8anning Ranch project) daily trips and would take access directly onto Bluff Road, which is not a CMP facility. As such, the project is required to comply with the CMP Traffic Impact Analysis guidelines.

The Level of Service standard for CMP facilities states that "In no case shall the LOS standards established be below the Level of Service E or the base year level, whichever is farthest from Level of Service A. The CMP intersection of Newport Boulevard and West Coast Highway is forecasted to operate at LOS E under Year 2016 Cumulative conditions, both without and with the Proposed Project. The project would not cause the intersection to fall below the CMP Level of Service standards in the short-term future.

Under General Plan Build-out conditions, assuming build-out of the MPAH, the intersection is forecasted to operate at Level of Service D with or without the proposed project. No further intersection improvements would be needed to accommodate the project.

2005 Congestion Management Program Highway System

Orange County, California

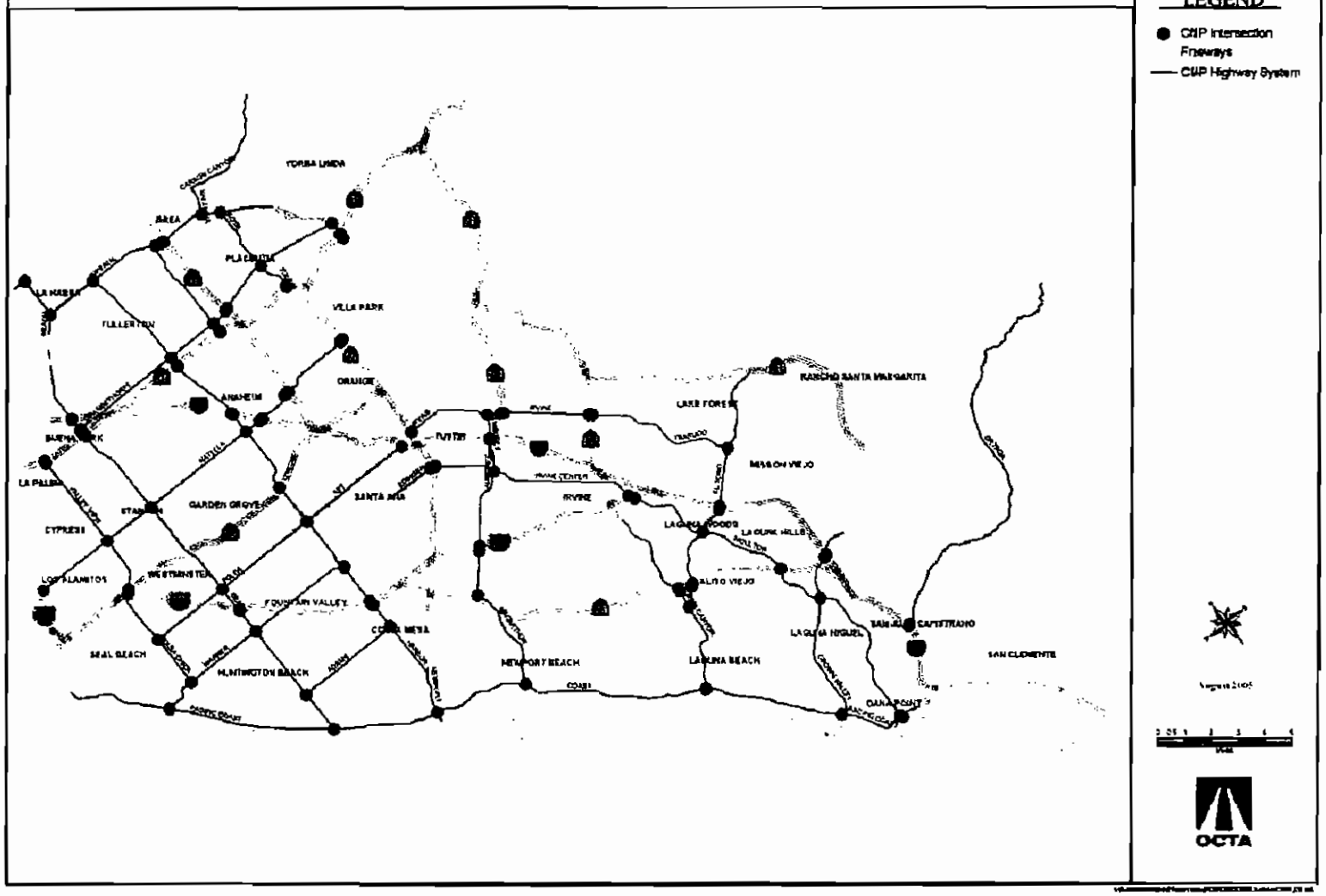

FIGURE 27
COUNTY OF ORANGE CMP HIGHWAY SYSTEM MAP

FILENAME: Jun 30, 2011 – 5:45pm K:\ORA_TPTO\ZSAC\Projects\Borning Ranch\CAD\5th Submittal.dwg

Kimley–Horn and Associates, Inc.

ANALYSIS OF STATE HIGHWAY FACILITIES

Intersections on State Highway facilities, which are controlled by Caltrans, are also analyzed using the Highway Capacity Manual (HCM) methodology, as required by the Caltrans Guide for the Preparation of Traffic Impact Studies (State of California Department of Transportation, December 2002). In the vicinity of the project, Pacific Coast Highway and Newport Boulevard are Caltrans facilities. Therefore, study intersections on these roadways will also be analyzed using the HCM intersection analysis methodology.

Caltrans advocates the use of the Highway Capacity Manual (HCM) intersection analysis methodology to analyze the operation of signalized intersections. The HCM methodology measures average seconds of delay per vehicle based on a number of technical parameters, such as peak hourly traffic volumes, number of lanes, type of signal operation, signal timing, and signal phasing in the calculations. A description of each Level of Service, based on delay parameters, per the Highway Capacity Manual (HCM) is provided in the following chart.

LEVEL OF SERVICE DESCRIPTIONS

Level of Service	Signalized Intersection Delay (sec)	Description
A	≤10	EXCELLENT – No vehicle waits longer than one red light and no approach phase is fully used.
B	> 10 and ≤ 20	VERY GOOD – An occasional approach phase is fully utilized; drivers begin to feel somewhat restricted within groups of vehicles.
C	> 20 and ≤ 35	GOOD – Occasionally drivers may have to wait through more than one red light; back-ups may develop behind turning vehicles
D	> 35 and ≤ 55	FAIR – Delays may be substantial during portions of the rush hours, but enough lower volume periods occur to permit clearing of developing lines, preventing excessive back-ups.
E	> 55 and ≤ 80	POOR – Represents the most vehicles that the intersection approaches can accommodate; may be long lines of waiting vehicles through several signal cycles.
F	> 80	FAILURE – Back-ups from nearby locations or on cross streets may restrict or prevent movement of vehicles out of the intersection approaches. Tremendous delays with continuously increasing queue lengths.

Source: Highway Capacity Manual, 2000

For State-controlled intersections, Level of Service standards and impact criteria specified by Caltrans will apply. The Caltrans Guide for the Preparation of Traffic Impact Studies states that "Caltrans endeavors to maintain a target Level of Service at the transition between LOS C and LOS D on State highway facilities. If an existing State highway facility is operating at less than the target LOS, the existing Level of Service is to be maintained.

Traffic Impact Criteria

The Caltrans Guide for the Preparation of Traffic Impact Studies does not establish a threshold of significance for State Highway intersections. This traffic analysis uses the following traffic threshold of significance:

- A significant project impact occurs at a State Highway study intersection when the addition of project-generated trips causes the peak hour level of service of the study intersection to change from acceptable operation (LOS A, B, or C) to deficient operation (LOS D, E, or F).

State Highway Intersection Analysis

Peak hour intersection analysis was conducted using the HCM methodology for the following State Highway study intersections:

#	Intersection
5	Hospital Road/Newport Boulevard
6	Orange Street/West Coast Highway
7	Prospect Street/West Coast Highway
8	Superior Avenue/West Coast Highway
9	Newport Boulevard/West Coast Highway
10	Riverside Avenue/West Coast Highway
11	Tustin Avenue/West Coast Highway
12	Dover Drive/West Coast Highway
19	Magnolia Street/Pacific Coast Highway
21	Brookhurst Street/Pacific Coast Highway
25	Newport Boulevard/Victoria Street
26	Newport Boulevard/Victoria (22nd Street)
34	Newport Boulevard/19th Street
35	Newport Boulevard/Broadway
36	Newport Boulevard/Harbor Boulevard
37	Newport Boulevard/18th Street (Rochester)
44	Newport Boulevard/17th Street
51	Newport Boulevard/16th Street
57	Bluff Road/W Coast Hwy (future intersection)

Intersection analysis worksheets for the HCM analysis of State Highway intersections are provided in ***Appendix L.***

Existing Conditions

Table 34 summarizes existing peak hour intersection operations for the State Highway study intersections. Each of the State Highway study intersections currently operates at an acceptable Level of Service, with the exception of one intersection:

Costa Mesa Intersection (s):

- 26. Newport Boulevard at Victoria / 22nd Street, (AM: LOS D).

Year 2016 Cumulative Conditions without Project

Table 35 summarizes Year 2016 Cumulative Conditions without Project peak hour operations for the State Highway study intersections. Under Year 2016 Cumulative without Project conditions, the following intersections would operate at LOS D or worse:

Costa Mesa Intersection (s):

- 26. Newport Boulevard at Victoria / 22nd Street (AM: LOS E)
- 36. Newport Boulevard at Harbor Boulevard (PM: LOS D)
- 37. Newport Boulevard at 18th Street/Rochester Street (PM: LOS D).

Year 2016 Cumulative Conditions with Proposed Project

This scenario adds project-related peak hour traffic volumes to the Year 2016 Cumulative Conditions without Project traffic volumes at the State Highway study intersections and assumes Bluff Road is constructed from West Coast Highway to 19th Street. **Table 36** summarizes Year 2016 Cumulative with Project peak hour operations. With the addition of project traffic, the following State Highway study intersections would operate at LOS D or worse:

Costa Mesa Intersection (s):

- 26. Newport Boulevard at Victoria Street/22nd Street (AM: LOS E)
- 36. Newport Boulevard at Harbor Boulevard (PM: LOS D)
- 37. Newport Boulevard at 18th Street/Rochester Street (PM: LOS E).
- 44. Newport Boulevard at 17th Street (PM: LOS D).

The project impact at the intersection of Newport Boulevard at 17th Street is a significant impact. The project impact can be mitigated with signal timing adjustments.

TABLE 34
NEWPORT BANNING RANCH
SUMMARY OF STATE HIGHWAY INTERSECTION OPERATIONS
EXISTING CONDITIONS

Intersection		Control	AM Peak Hour		PM Peak Hour	
			Delay	LOS	Delay	LOS
5	Newport Blvd/Hospital Rd	S	21.4	C	21.6	C
6	Orange St/W. Coast Hwy	S	5.9	A	5.0	A
7	Prospect St/W. Coast Hwy	S	11.1	B	4.9	A
8	Superior Ave/W. Coast Hwy	S	24.3	C	29.1	C
9	Newport Blvd/W. Coast Hwy	S	14.1	B	16.4	B
10	Riverside Ave/W. Coast Hwy	S	11.3	B	14.1	B
11	Tustin Ave/W. Coast Hwy	S	17.6	B	5.6	A
12	Dover Dr/W. Coast Hwy	S	20.1	C	21.4	C
19	Magnolia St/Pacific Coast Highway	S	14.9	B	14.3	B
21	Brookhurst St/Pacific Coast Highway	S	17.8	B	15.8	B
25	Newport Blvd/Victoria St	S	19.1	B	20.0	B
26	Newport Blvd/Victoria St (22nd St)	S	36.9	D	23.7	C
34	Newport Blvd/19th St	S	23.5	C	23.3	C
35	Newport Blvd/Broadway	S	5.6	A	7.3	A
36	Newport Blvd/Harbor Blvd	S	10.6	B	22.4	C
37	Newport Blvd/18th St (Rochester St)	S	12.0	B	22.9	C
44	Newport Blvd/17th St	S	27.8	C	30.5	C
51	Newport Blvd/16th St	S	9.4	A	7.8	A
57	Bluff Rd/W. Coast Hwy	Future Intersection				

Notes:
S = Signalized
Intersection operation is expressed in average seconds of delay per vehicle during the peak hour for signalized intersections using the HCM 2000 Methodology.

TABLE 35
NEWPORT BANNING RANCH
SUMMARY OF STATE HIGHWAY INTERSECTION OPERATIONS
YEAR 2016 CUMULATIVE CONDITIONS WITHOUT PROJECT

Intersection		Control	AM Peak Hour		PM Peak Hour	
			Delay	LOS	Delay	LOS
5	Newport Blvd/Hospital Rd	S	22.3	C	23.3	C
6	Orange St/W. Coast Hwy	S	6.5	A	5.5	A
7	Prospect St/W. Coast Hwy	S	11.6	B	5.5	A
8	Superior Ave/W. Coast Hwy	S	24.9	C	29.8	C
9	Newport Blvd/W. Coast Hwy	S	16.8	B	17.1	B
10	Riverside Ave/W. Coast Hwy	S	11.8	B	14.4	B
11	Tustin Ave/W. Coast Hwy	S	30.6	C	5.7	A
12	Dover Dr/W. Coast Hwy	S	20.5	C	24.2	C
19	Magnolia St/Pacific Coast Highway	S	15.6	B	15.9	B
21	Brookhurst St/Pacific Coast Highway	S	18.0	B	16.2	B
25	Newport Blvd/Victoria St	S	19.6	B	20.6	C
26	Newport Blvd/Victoria St (22nd St)	S	58.8	**E**	24.7	C
34	Newport Blvd/19th St	S	25.2	C	25.2	C
35	Newport Blvd/Broadway	S	5.9	A	8.0	A
36	Newport Blvd/Harbor Blvd	S	11.7	B	37.1	**D**
37	Newport Blvd/18th St (Rochester St)	S	13.6	B	39.9	**D**
44	Newport Blvd/17th St	S	29.1	C	33.1	C
51	Newport Blvd/16th St	S	9.9	A	8.3	A
57	Bluff Rd/W. Coast Hwy	Future Intersection				

Notes:
S = Signalized
Bold and shaded values indicate intersections operating at LOS E or F.
Intersection operation is expressed in average seconds of delay per vehicle during the peak hour for signalized intersections using the HCM 2000 Methodology.

TABLE 36
NEWPORT BANNING RANCH
SUMMARY OF STATE HIGHWAY INTERSECTION OPERATIONS
YEAR 2016 CUMULATIVE WITH PROPOSED PROJECT

	Intersection	Control	Without Project				With Project				Project Impact			
			AM Peak Hour		PM Peak Hour		AM Peak Hour		PM Peak Hour		Change		Significant ?	
			Delay	LOS	Delay	LOS	Delay	LOS	Delay	LOS	AM	PM	AM	PM
5	Newport Blvd/Hospital Rd	S	22.3	C	23.3	C	22.3	C	23.3	C	0.0	0.0	No	No
6	Orange St/W. Coast Hwy	S	6.5	A	5.5	A	6.5	A	5.6	A	0.0	0.1	No	No
7	Prospect St/W. Coast Hwy	S	11.6	B	5.5	A	11.6	B	5.4	A	0.0	-0.1	No	No
8	Superior Ave/W. Coast Hwy	S	24.9	C	29.8	C	23.8	C	27.0	C	-1.1	-2.8	No	No
9	Newport Blvd/W. Coast Hwy	S	16.8	B	17.1	B	17.6	B	17.2	B	0.8	0.1	No	No
10	Riverside Ave/W. Coast Hwy	S	11.8	B	14.4	B	12.1	B	15.7	B	0.3	1.3	No	No
11	Tustin Ave/W. Coast Hwy	S	30.6	C	5.7	A	33.3	C	7.1	A	2.7	1.4	No	No
12	Dover Dr/W. Coast Hwy	S	20.5	C	24.2	C	20.5	C	24.5	C	0.0	0.3	No	No
19	Magnolia St/Pacific Coast Highway	S	15.6	B	15.9	B	15.7	B	16.1	B	0.1	0.2	No	No
21	Brookhurst St/Pacific Coast Highway	S	18.0	B	16.2	B	18.0	B	16.9	B	0.0	0.7	No	No
25	Newport Blvd/Victoria St	S	19.6	B	20.6	C	19.6	B	20.6	C	0.0	0.0	No	No
26	Newport Blvd/Victoria St (22nd St)	S	58.8	**E**	24.7	C	58.8	**E**	24.7	C	0.0	0.0	No	No
34	Newport Blvd/19th St	S	25.2	C	25.2	C	26.8	C	26.7	C	1.6	1.5	No	No
35	Newport Blvd/Broadway	S	5.9	A	8.0	A	5.9	A	8.4	A	0.0	0.4	No	No
36	Newport Blvd/Harbor Blvd	S	11.7	B	37.1	**D**	12.0	B	54.6	**D**	0.3	17.5	No	No
37	Newport Blvd/18th St (Rochester St)	S	13.6	B	39.9	**D**	14.8	B	57.8	**E**	1.2	17.9	No	No
44	Newport Blvd/17th St	S	29.1	C	33.1	C	31.2	C	36.8	**D**	2.1	3.7	No	Yes
51	Newport Blvd/16th St	S	9.9	A	8.3	A	9.7	A	8.2	A	-0.2	-0.1	No	No
57	Bluff Rd/W. Coast Hwy	S	Future Intersection				11.9	B	17.3	B	11.9	17.3	No	No

Notes:
S = Signalized
Bold and shaded values indicate intersections operating at LOS E or F.
Intersection operation is expressed in average seconds of delay per vehicle during the peak hour for signalized intersections using the HCM 2000 Methodology.
Negative changes in delay values may occur as a result of: the reassignment of traffic due to the Bluff Road connection to West Coast Highway; reassignment of trips in the traffic analysis model due to congestion at other intersections, and trips served more locally by the new project that would otherwise travel farther or in another direction.

Year 2016 Cumulative Conditions with Project – Bluff Road Alternative

This scenario adds project-related peak hour traffic volumes to the Year 2016 Cumulative Conditions without Project traffic volumes at the State Highway study intersections and assumes Bluff Road is built only to the northerly limits of the development, north 17th Street. This is a project alternative, which eliminates the Bluff Road connection between the northerly development boundary and 19th Street.

Table 37 summarizes Year 2016 Cumulative Conditions with Project – Bluff Road Alternative peak hour operations. With the addition of project traffic, the following State Highway study intersections would operate at LOS D or worse:

Costa Mesa Intersection (s):

- 26. Newport Boulevard at Victoria Street/22nd Street (AM: LOS E)
- 36. Newport Boulevard at Harbor Boulevard (PM: LOS D)
- 37. Newport Boulevard at 18th Street/Rochester Street (PM: LOS D).
- 44. Newport Boulevard at 17th Street (PM: LOS D).

These are the same intersections forecasted to operate at LOS D or worse in the Year 2016 Cumulative with Proposed Project condition.

General Plan Build-out – No Development

This scenario assumes build-out of all General Plan land uses in the project vicinity, with the exception of the project site itself. This scenario assumes no development on the Newport Banning Ranch property, and no Bluff Road or local street extensions onto the project site. **Table 38** summarizes AM and PM peak hour intersection operations for General Plan Build-out with No Development conditions.

The following State Highway study intersections would operate at LOS D or worse under the General Plan Build-out – No Development scenario:

Huntington Beach Intersection (s):

- 19. Magnolia Street and Pacific Coast Highway (PM: LOS E)

Costa Mesa Intersection (s):

- 34. Newport Boulevard and 19th Street (AM: LOS D; PM: LOS D)
- 36. Newport Boulevard and Harbor Boulevard (PM: LOS D)
- 37. Newport Boulevard and 18th Street/Rochester Street (PM: LOS D)
- 44. Newport Boulevard and 17th Street (PM: LOS D).

TABLE 37
NEWPORT BANNING RANCH
SUMMARY OF STATE HIGHWAY INTERSECTION OPERATIONS
YEAR 2016 CUMULATIVE WITH PROJECT - BLUFF ROAD ALTERNATIVE

	Intersection	Control	Without Project				With Project Alternative				Project Impact			
			AM Peak Hour		PM Peak Hour		AM Peak Hour		PM Peak Hour		Change		Significant ?	
			Delay	LOS	Delay	LOS	Delay	LOS	Delay	LOS	AM	PM	AM	PM
5	Newport Blvd/Hospital Rd	S	22.3	C	23.3	C	22.3	C	23.3	C	0.0	0.0	No	No
6	Orange St/W. Coast Hwy	S	6.5	A	5.5	A	6.5	A	5.6	A	0.0	0.1	No	No
7	Prospect St/W. Coast Hwy	S	11.6	B	5.5	A	11.6	B	5.4	A	0.0	-0.1	No	No
8	Superior Ave/W. Coast Hwy	S	24.9	C	29.8	C	23.9	C	27.1	C	-1.0	-2.7	No	No
9	Newport Blvd/W. Coast Hwy	S	16.8	B	17.1	B	17.6	B	17.1	B	0.8	0.0	No	No
10	Riverside Ave/W. Coast Hwy	S	11.8	B	14.4	B	12.0	B	15.1	B	0.2	0.7	No	No
11	Tustin Ave/W. Coast Hwy	S	30.6	C	5.7	A	33.3	C	7.1	A	2.7	1.4	No	No
12	Dover Dr/W. Coast Hwy	S	20.5	C	24.2	C	20.5	C	24.5	C	0.0	0.3	No	No
19	Magnolia St/Pacific Coast Highway	S	15.6	B	15.9	B	15.7	B	16.1	B	0.1	0.2	No	No
21	Brookhurst St/Pacific Coast Highway	S	18.0	B	16.2	B	18.0	B	16.9	B	0.0	0.7	No	No
25	Newport Blvd/Victoria St	S	19.6	B	20.6	C	19.6	B	20.6	C	0.0	0.0	No	No
26	Newport Blvd/Victoria St (22nd St)	S	58.8	**E**	24.7	C	58.8	**E**	24.7	C	0.0	0.0	No	No
34	Newport Blvd/19th St	S	25.2	C	25.2	C	26.1	C	26.1	C	0.9	0.9	No	No
35	Newport Blvd/Broadway	S	5.9	A	8.0	A	5.9	A	8.6	A	0.0	0.6	No	No
36	Newport Blvd/Harbor Blvd	S	11.7	B	37.1	**D**	12.1	B	59.6	**E**	0.4	22.5	No	No
37	Newport Blvd/18th St (Rochester St)	S	13.6	B	39.9	**D**	15.4	B	62.6	**E**	1.8	22.7	No	No
44	Newport Blvd/17th St	S	29.1	C	33.1	C	31.8	C	37.3	**D**	2.7	4.2	No	Yes
51	Newport Blvd/16th St	S	9.9	A	8.3	A	9.7	A	8.2	A	-0.2	-0.1	No	No
57	Bluff Rd/W. Coast Hwy	S	Future Intersection				11.5	B	16.7	B	11.5	16.7	No	No

Notes:
S = Signalized
Bold and shaded values indicate intersections operating at LOS E or F.
Intersection operation is expressed in average seconds of delay per vehicle during the peak hour for signalized intersections using the HCM 2000 Methodology.
Negative changes in delay values may occur as a result of: the reassignment of traffic due to the Bluff Road connection to West Coast Highway; reassignment of trips in the traffic analysis model due to congestion at other intersections, and trips served more locally by the new project that would otherwise travel farther or in another direction.

TABLE 38
NEWPORT BANNING RANCH
SUMMARY OF STATE HIGHWAY INTERSECTION OPERATIONS
GENERAL PLAN BUILD-OUT - NO DEVELOPMENT

Intersection		Control	AM Peak Hour		PM Peak Hour	
			Delay	LOS	Delay	LOS
5	Newport Blvd/Hospital Rd	S	17.7	B	23.1	C
6	Orange St/W. Coast Hwy	S	7.0	A	6.2	A
7	Prospect St/W. Coast Hwy	S	13.8	B	6.8	A
8	Superior Ave/W. Coast Hwy	S	30.3	C	30.0	C
9	Newport Blvd/W. Coast Hwy	S	19.1	B	16.4	B
10	Riverside Ave/W. Coast Hwy	S	12.4	B	15.3	B
11	Tustin Ave/W. Coast Hwy	S	17.6	B	11.6	B
12	Dover Dr/W. Coast Hwy	S	21.0	C	21.6	C
19	Magnolia St/Pacific Coast Hwy	S	24.1	C	62.8	E
21	Brookhurst St/Pacific Coast Hwy	S	20.0	B	19.3	B
25	Newport Blvd/Victoria St	S	18.4	B	21.0	C
26	Newport Blvd /Victoria St (22nd St)	S	29.1	C	22.6	C
34	Newport Blvd/19th St	S	47.2	D	39.4	D
35	Newport Blvd/Broadway	S	4.8	A	7.0	A
36	Newport Blvd/Harbor Blvd	S	11.4	B	45.1	D
37	Newport Blvd/18th St (Rochester St)	S	15.4	B	41.9	D
44	Newport Blvd/17th St	S	27.8	C	36.5	D
51	Newport Blvd/16th St	S	9.6	A	8.2	A
57	Bluff Rd/W. Coast Hwy	S	0.9	A	1.4	A

Notes:
S = Signalized
Intersection operation is expressed in average seconds of delay per vehicle during the peak hour for signalized intersections using the HCM 2000 Methodology.

General Plan Build-out with Project

This scenario assumes build-out of all General Plan land uses in the project vicinity, including the proposed Newport Banning Ranch project, as described in the Project Description section of this report. **Table 39** summarizes AM and PM peak hour intersection operations for General Plan Build-out with Project conditions.

The following State Highway study intersections would operate at LOS D or worse under the General Plan Build-out with Proposed Project scenario:

Huntington Beach Intersection (s):

- 19. Magnolia Street and Pacific Coast Highway (PM: LOS D)

Costa Mesa Intersection (s):

- 34. Newport Boulevard and 19th Street (AM: LOS D; PM: LOS D)
- 36. Newport Boulevard and Harbor Boulevard (PM: LOS D)
- 37. Newport Boulevard and 18th Street/Rochester Street (PM: LOS D)
- 44. Newport Boulevard and 17th Street (PM: LOS D).

These are the same intersections forecasted to operate at LOS D or worse in the General Plan Build-out No Development condition. The addition of project-related traffic would not cause additional State Highway intersections to operate at LOS D or worse, and would not cause the Level of Service to worsen at any State Highway intersection already operating at LOS D or worse.

General Plan Build-out with Project – Bluff Road Alternative

The General Plan Build-out with Project – Bluff Road Alternative assumes the development of the Newport Banning Ranch with the proposed development plan, and assumes that Bluff Road is constructed only from West Coast Highway to the northern development boundary, just north of 17th Street. This alternative eliminates the Bluff Road connection between the northerly development boundary and 19th Street. **Table 40** summarizes AM and PM peak hour intersection operations for General Plan Build-out with Project – Bluff Road Alternative conditions.

TABLE 39
NEWPORT BANNING RANCH
SUMMARY OF STATE HIGHWAY INTERSECTION OPERATIONS
GENERAL PLAN BUILD-OUT - WITH PROJECT

	Intersection	Control	Without Project Development				With Project Development				Project Impact			
			AM Peak Hour		PM Peak Hour		AM Peak Hour		PM Peak Hour		Change		Significant ?	
			Delay	LOS	Delay	LOS	Delay	LOS	Delay	LOS	AM	PM	AM	PM
5	Newport Blvd/Hospital Rd	S	17.7	B	23.1	C	16.7	B	22.2	C	-1.0	-0.9	No	No
6	Orange St/W. Coast Hwy	S	7.0	A	6.2	A	6.5	A	6.3	A	-0.5	0.1	No	No
7	Prospect St/W. Coast Hwy	S	13.8	B	6.8	A	13.9	B	7.0	A	0.1	0.2	No	No
8	Superior Ave/W. Coast Hwy	S	30.3	C	30.0	C	29.9	C	30.4	C	-0.4	0.4	No	No
9	Newport Blvd/W. Coast Hwy	S	19.1	B	16.4	B	19.3	B	16.4	B	0.2	0.0	No	No
10	Riverside Ave/W. Coast Hwy	S	12.4	B	15.3	B	12.3	B	15.5	B	-0.1	0.2	No	No
11	Tustin Ave/W. Coast Hwy	S	17.6	B	11.6	B	18.6	B	11.3	B	1.0	-0.3	No	No
12	Dover Dr/W. Coast Hwy	S	21.0	C	21.6	C	20.7	C	21.1	C	-0.3	-0.5	No	No
19	Magnolia St/Pacific Coast Hwy	S	24.1	C	62.8	E	23.5	C	53.0	D	-0.6	-9.8	No	No
21	Brookhurst St/Pacific Coast Hwy	S	20.0	B	19.3	B	18.5	B	18.6	B	-1.5	-0.7	No	No
25	Newport Blvd/Victoria St	S	18.4	B	21.0	C	18.3	B	20.9	C	-0.1	-0.1	No	No
26	Newport Blvd /Victoria St (22nd St)	S	29.1	C	22.6	C	29.4	C	22.7	C	0.3	0.1	No	No
34	Newport Blvd/19th St	S	47.2	D	39.4	D	49.5	D	41.7	D	2.3	2.3	No	No
35	Newport Blvd/Broadway	S	4.8	A	7.0	A	4.7	A	7.0	A	-0.1	0.0	No	No
36	Newport Blvd/Harbor Blvd	S	11.4	B	45.1	D	10.9	B	47.4	D	-0.5	2.3	No	No
37	Newport Blvd/18th St (Rochester St)	S	15.4	B	41.9	D	15.1	B	42.5	D	-0.3	0.6	No	No
44	Newport Blvd/17th St	S	27.8	C	36.5	D	28.8	C	36.7	D	1.0	0.2	No	No
51	Newport Blvd/16th St	S	9.6	A	8.2	A	10.0	B	8.2	A	0.4	0.0	No	No
57	Bluff Rd/W. Coast Hwy	S	0.9	A	1.4	A	11.4	B	18.0	B	10.5	16.6	No	No

Notes:
S = Signalized
Intersection operation is expressed in average seconds of delay per vehicle during the peak hour for signalized intersections using the HCM 2000 Methodology.
Negative changes in delay values may occur as a result of: the reassignment of traffic due to the Bluff Road connection to West Coast Highway; reassignment of trips in the traffic analysis model due to congestion at other intersections, and trips served more locally by the new project that would otherwise travel farther or in another direction.

TABLE 40
NEWPORT BANNING RANCH
SUMMARY OF STATE HIGHWAY INTERSECTION OPERATIONS
GENERAL PLAN BUILD-OUT WITH PROJECT - BLUFF ROAD ALTERNATIVE

	Intersection	Control	Without Project Development				With Project Development				Project Impact			
			AM Peak Hour		PM Peak Hour		AM Peak Hour		PM Peak Hour		Change		Significant ?	
			Delay	LOS	Delay	LOS	Delay	LOS	Delay	LOS	AM	PM	AM	PM
5	Newport Blvd/Hospital Rd	S	17.7	B	23.1	C	16.9	B	22.3	C	-0.8	-0.8	No	No
6	Orange St/W. Coast Hwy	S	7.0	A	6.2	A	5.6	A	6.1	A	-1.4	-0.1	No	No
7	Prospect St/W. Coast Hwy	S	13.8	B	6.8	A	13.8	B	7.5	A	0.0	0.7	No	No
8	Superior Ave/W. Coast Hwy	S	30.3	C	30.0	C	29.9	C	31.2	C	-0.4	1.2	No	No
9	Newport Blvd/W. Coast Hwy	S	19.1	B	16.4	B	19.2	B	16.4	B	0.1	0.0	No	No
10	Riverside Ave/W. Coast Hwy	S	12.4	B	15.3	B	12.4	B	15.5	B	0.0	0.2	No	No
11	Tustin Ave/W. Coast Hwy	S	17.6	B	11.6	B	18.4	B	11.3	B	0.8	-0.3	No	No
12	Dover Dr/W. Coast Hwy	S	21.0	C	21.6	C	20.7	C	21.0	C	-0.3	-0.6	No	No
19	Magnolia St/Pacific Coast Hwy	S	24.1	C	62.8	E	22.8	C	44.2	D	-1.3	-18.6	No	No
21	Brookhurst St/Pacific Coast Hwy	S	20.0	B	19.3	B	19.1	B	17.5	B	-0.9	-1.8	No	No
25	Newport Blvd/Victoria St	S	18.4	B	21.0	C	18.4	B	21.3	C	0.0	0.3	No	No
26	Newport Blvd /Victoria St (22nd St)	S	29.1	C	22.6	C	29.4	C	22.6	C	0.3	0.0	No	No
34	Newport Blvd/19th St	S	47.2	D	39.4	D	52.1	D	41.6	D	4.9	2.2	No	No
35	Newport Blvd/Broadway	S	4.8	A	7.0	A	4.7	A	7.0	A	-0.1	0.0	No	No
36	Newport Blvd/Harbor Blvd	S	11.4	B	45.1	D	11.4	B	50.0	D	0.0	4.9	No	No
37	Newport Blvd/18th St (Rochester St)	S	15.4	B	41.9	D	15.2	B	44.9	D	-0.2	3.0	No	No
44	Newport Blvd/17th St	S	27.8	C	36.5	D	28.9	C	36.9	D	1.1	0.4	No	No
51	Newport Blvd/16th St	S	9.6	A	8.2	A	10.0	A	8.4	A	0.4	0.2	No	No
57	Bluff Rd/W. Coast Hwy	S	0.9	A	1.4	A	12.0	B	23.6	C	11.1	22.2	No	No

Notes:
S = Signalized
Intersection operation is expressed in average seconds of delay per vehicle during the peak hour for signalized intersections using the HCM 2000 Methodology.
Negative changes in delay values may occur as a result of: the reassignment of traffic due to the Bluff Road connection to West Coast Highway; reassignment of trips in the traffic analysis mode due to congestion at other intersections, and trips served more locally by the new project that would otherwise travel farther or in another direction.

The following State Highway study intersections would operate at LOS D or worse under the General Plan Build-out with Project – Bluff Road Alternative scenario:

Huntington Beach Intersection (s):

- 19. Magnolia Street and Pacific Coast Highway (PM: LOS D)

Costa Mesa Intersection (s):

- 34. Newport Boulevard and 19th Street (AM: LOS D; PM: LOS D)
- 36. Newport Boulevard and Harbor Boulevard (PM: LOS D)
- 37. Newport Boulevard and 18th Street/Rochester Street (PM: LOS D)
- 44. Newport Boulevard and 17th Street (PM: LOS D).

These are the same intersections forecasted to operate at LOS D or worse in the No Development conditions. The addition of project-related traffic would not cause additional State Highway intersections to operate at LOS D or worse, and would not cause the Level of Service to worsen at any State Highway intersection already operating at LOS D or worse.

Freeway Mainline Analysis

Analysis of freeway mainline segments in the vicinity of the project was conducted in accordance with the Caltrans Guide for the Preparation of Traffic Impact Studies, which specifies application of the HCM methodology for freeway analysis. Freeway analysis results are expressed in terms of density, which measures the number of passenger cars per lane mile (pc/mi/ln) on the freeway mainline. The target Level of Service (LOS) for freeway mainline segments is LOS D, which is a density of between 35 and 45 pc/mi/ln. If the existing density exceeds the target LOS, the existing Level of Service is to be maintained.

Freeway mainline analysis was conducted on the SR-55 Freeway (the Costa Mesa Freeway) between Mesa Drive and 19th Street. Year 2008 peak hour freeway volumes were obtained from the Caltrans website. A conservative growth factor of 1.0% per year was applied to 2008 traffic volumes to derive Existing, and Year 2016 Cumulative baseline traffic volumes. Freeway analyses were conducted using the HCS+ software, operational methodology. The results of the analysis are expressed in terms of vehicular density in each peak hour, in each direction, as discussed above. All freeway analysis worksheets are provided in ***Appendix M***. A summary of the results of the freeway mainline analysis for each study scenario are presented below.

Existing Conditions

Table 41 summarizes Existing peak hour freeway volumes and analysis results for the morning and evening peak hours, by segment, and by direction. This table indicates that all study freeway segments are currently operating at LOS D or better for both peak hours.

Year 2016 Cumulative Without Project

The Year 2016 Cumulative condition consists of Existing plus Growth plus Committed and Cumulative Projects traffic. **Table 42** summarizes Year 2016 Cumulative Without Project peak hour freeway volumes and analysis results. This table indicates that all study freeway segments will continue to operate at LOS D or better for both peak hours under Year 2016 Cumulative without Project conditions.

Year 2016 Cumulative With Project

Traffic from the Proposed Project was added to Year 2016 Cumulative without Project conditions. **Table 43** summarizes 2016 Cumulative With Project peak hour freeway volumes and analysis results. This table indicates that all study freeway segments would continue to operate at LOS D or better for both peak hours with the addition of project traffic. The addition of project-related traffic would not cause additional freeway segments to operate at LOS D or worse, and would not cause the Level of Service to worsen on any segment already operating at LOS D or worse.

Year 2016 Cumulative With Project – Bluff Road Alternative

Traffic from the Project Bluff Road Alternative was added to Year 2016 Cumulative without Project conditions. **Table 44** summarizes 2016 Cumulative with Project – Bluff Road Alternative peak hour freeway volumes and analysis results. This table indicates that all study freeway segments would continue to operate at LOS D or better for both peak hours with the addition of traffic from the Year 2016 Cumulative with Project – Bluff Road Alternative. The addition of project-related traffic would not cause additional freeway segments to operate at LOS D or worse, and would not cause the Level of Service to worsen on any segment already operating at LOS D or worse.

TABLE 41
SUMMARY OF FREEWAY MAINLINE OPERATION
EXISTING CONDITIONS

Freeway Segment			Lanes	AM Peak Hour			PM Peak Hour		
				Volume	Density (pc/mi/ln)	LOS	Volume	Density (pc/mi/ln)	LOS
SR-55 Northbound									
19th Street	to	Victoria/22nd Streets	4	4,097	16.6	B	3,645	14.8	B
Victoria/22nd Streets	to	Mesa Drive	4	5,662	22.9	C	5,040	20.4	C
Mesa Drive	to	I-405, San Diego Frwy	5	7,958	25.9	C	6,801	22.0	C
SR-55 Southbound									
I-405, San Diego Frwy	to	Mesa Drive	4	2,950	11.9	B	4,107	16.6	B
Mesa Drive	to	Victoria/22nd Streets	4	3,832	15.5	B	4,454	18.0	C
Victoria/22nd Streets	to	19th Street	3	2,771	15.0	B	3,223	17.4	B

pc/mi/ln = passenger cars per mile per lane
LOS = Level of Service

TABLE 42
SUMMARY OF FREEWAY MAINLINE OPERATION
2016 CUMULATIVE WITHOUT PROJECT CONDITIONS

Freeway Segment			Lanes	AM Peak Hour			PM Peak Hour		
				Volume	Density (pc/mi/ln)	LOS	Volume	Density (pc/mi/ln)	LOS
SR-55 Northbound									
19th Street	to	Victoria/22nd Streets	4	4,180	16.9	B	3,678	14.9	B
Victoria/22nd Streets	to	Mesa Drive	4	5,716	23.1	C	5,028	20.4	C
Mesa Drive	to	I-405, San Diego Frwy	5	8,458	27.8	D	6,627	21.5	C
SR-55 Southbound									
I-405, San Diego Frwy	to	Mesa Drive	4	3,136	12.7	B	4,001	16.2	B
Mesa Drive	to	Victoria/22nd Streets	4	3,868	15.7	B	4,445	18.0	B
Victoria/22nd Streets	to	19th Street	3	2,829	15.3	B	3,251	17.6	B

pc/mi/ln = passenger cars per mile per lane
LOS = Level of Service

TABLE 43
SUMMARY OF FREEWAY MAINLINE OPERATION
2016 CUMULATIVE WITH PROJECT CONDITIONS

Freeway Segment			Lanes	AM Peak Hour			PM Peak Hour		
				Volume	Density (pc/mi/ln)	LOS	Volume	Density (pc/mi/ln)	LOS
SR-55 Northbound									
19th Street	to	Victoria/22nd Streets	4	4,417	17.9	B	3,885	15.7	B
Victoria/22nd Streets	to	Mesa Drive	4	5,952	24.1	C	5,236	21.2	C
Mesa Drive	to	I-405, San Diego Frwy	5	8,765	29.1	D	6,867	22.2	C
SR-55 Southbound									
I-405, San Diego Frwy	to	Mesa Drive	4	3,250	13.2	B	4,146	16.8	B
Mesa Drive	to	Victoria/22nd Streets	4	4,028	16.3	B	4,628	18.7	C
Victoria/22nd Streets	to	19th Street	3	2,989	16.1	B	3,435	18.5	C

pc/mi/ln = passenger cars per mile per lane
LOS = Level of Service

TABLE 44
SUMMARY OF FREEWAY MAINLINE OPERATION
2016 CUMULATIVE WITH PROJECT ALTERNATIVE CONDITIONS

Freeway Segment			Lanes	AM Peak Hour			PM Peak Hour		
				Volume	Density (pc/mi/ln)	LOS	Volume	Density (pc/mi/ln)	LOS
SR-55 Northbound									
19th Street	to	Victoria/22nd Streets	4	4,417	17.9	B	3,885	15.7	B
Victoria/22nd Streets	to	Mesa Drive	4	5,952	24.1	C	5,236	21.2	C
Mesa Drive	to	I-405, San Diego Frwy	5	8,765	29.1	D	6,867	22.2	C
SR-55 Southbound									
I-405, San Diego Frwy	to	Mesa Drive	4	3,250	13.2	B	4,146	16.8	B
Mesa Drive	to	Victoria/22nd Streets	4	4,028	16.3	B	4,628	18.7	C
Victoria/22nd Streets	to	19th Street	3	2,989	16.1	B	3,435	18.5	C

pc/mi/ln = passenger cars per mile per lane
LOS = Level of Service

SITE ACCESS AND ON-SITE CIRCULATION

Currently, there is no public access through the project site. The project proposes to construct Bluff Road through the project site, connecting West Coast Highway to 19th Street, as depicted in the City of Newport Beach General Plan Circulation Element and the Orange County MPAH. Bluff Road would be constructed as a four-lane divided road from West Coast Highway to the limits of the development area, north of 17th Street; and a two-lane road northward to 19th Street.

As shown on the project site plan (Figure 2) Bluff Road would intersect with a number of existing local streets to allow for the circulation of project traffic to and from the project site:

- Bluff Road would connect to West Coast Highway to form a signalized T-intersection. A right-turn lane from westbound West Coast Highway onto Bluff Road and from southbound Bluff Road to West Coast Highway is proposed. A portion of the north side of West Coast Highway from Superior Avenue to west of the project site would need to be widened to accommodate future intersection lanes.

- 15th Street is identified as a four-lane divided road on the City of Newport Beach General Plan. It would be extended westward from Monrovia Avenue to connect to Bluff Road. The project site plan shows the Bluff Road and 15th Street intersection as a signalized T-intersection, with 15th Street continuing as the through street, and Bluff Road as the intersecting street.

- 16th Street is a two-lane collector which would be extended west from the City of Newport Beach utility yard to connect to Bluff Road as a stop-controlled four-legged intersection.

- 17th Street is identified as a four-lane undivided road and would be extended westward from the Newport Banning Ranch property line to connect as a signalized four-way intersection with Bluff Road.

- At the north end of the project site, 19th Street at Balboa Boulevard would be configured to accommodate Bluff Road, which would "T" into 19th Street in the short-term, and would be a four-way signalized intersection under Build-out conditions. (Bluff Road is shown extended to Victoria Street on the City of Costa Mesa Circulation Element.)

The majority of the project development would be located along Bluff Road, with internal side streets connecting to Bluff Road and individual parcels taking access to the local streets via internal access points. The proposed commercial development and some of the residential development would be located along Bluff Road, on either side of 17th Street.

The future Bluff Road intersections with West Coast Highway, 15th, 16th, 17th, and 19th Streets were analyzed as part of the project impact analysis. The Year 2016 results for both the Proposed Project and the Project – Bluff Road Alternative (Tables 15 and 17, respectively) indicate that each of these on-site intersections would operate at an acceptable level of service.

The General Plan Build-out analysis for both the Proposed Project and the Project – Bluff Road Alternative (Tables 20 and 21, respectively) also indicates that each of the on-site intersections would operate at an acceptable level of service as proposed.

With the construction of Bluff Road through the project site, and with the connection of the four local east-west streets (15th, 16th, 17th, and 19th Streets) to Bluff Road, some project traffic and some existing traffic in the area will use the new circulation system to access West Coast Highway. Portions of the east-west streets are currently two-lane roadways, and some have on-street parking and numerous side streets and driveways. An analysis of the effect of the increase in traffic along these streets through southwest Costa Mesa and adjacent Newport Beach is provided in the following Special Issues section.

CONSTRUCTION TRAFFIC

The Project construction activities would include the consolidation of the existing oilfields and soil remediation in addition to the actual site development.

Remediation is estimated to require approximately 900,000 cubic yards of cut and fill with an additional 1,500,000 cubic yards of earthwork required in the development of the project site features. Essentially, all grading will be balanced on site. An estimated 25,000 cubic yards of export is assumed for removal of materials not suitable for retention on site, which would require approximately 1,563 truckloads of dirt and debris removal. Construction truck traffic will be limited to 16 trucks per hour between June 1 and September 1, and 25 trucks per hour at all other times of the year. The Applicant must identify planned travel patterns for haul vehicles, and obtain a Haul Route permit from the City.

Construction activities would include site clearing, grading and excavation, and construction of structures and site features. Large construction equipment such as bulldozers, loaders, scrapers, and pavers would be required during various construction phases. This equipment is generally brought to the site at the start of the construction phase and kept on site until its term of use ends. A staging area would be designated on-site to store construction equipment and supplies during construction. Throughout construction, the size of the work crew reporting to the site each day would vary depending on the construction phase and the different construction activities taking place at the time. Parking for workers would be provided on site during all phases of construction. Construction workers would not be allowed to park on local streets. If needed during the peak construction periods, off-site parking will be provided, and workers will carpool or be shuttled to the worksite.

Construction-related traffic would use the existing regional and local truck route network to approach the site, getting as close to the site as possible before turning off the designated truck route. Trucks would most likely access the Project site from SR-55/Newport Boulevard, primarily from existing east-west streets such as 16th Street or 17th Street. Truck traffic may also reach the Project site from Pacific Coast Highway/West Coast Highway, I-405, and Brookhurst Street. No vehicles would be permitted to stage on off-site streets. The Applicant will be required to identify planned travel patterns for large construction vehicles, and obtain a permit from the City. Temporary delays in traffic may occasionally occur due to oversized vehicles traveling at lower speeds on local streets. Such delays would be occasional, and of short duration. These temporary delays would be considered less than significant.

SPECIAL ISSUES

Average Daily Traffic on Local Streets

The peak hour analysis presented previously indicates that, generally, the study intersections in the area between the project site and Superior Avenue will operate at an acceptable Level of Service during the typical peak hours, and very few significant impacts to peak hour intersection operation are forecasted as a result of the project, either in the short term (2016) or Build-out conditions.

Although peak hour intersection analysis is the industry standard for determining traffic-related impacts, a supplemental roadway segment assessment was also conducted for this project. The purpose is to provide an indication of how the proposed project may affect traffic patterns on the local roadways through southwest Costa Mesa and adjacent Newport Beach that will connect to Bluff Road and provide access to the project site. Four east-west roadways (15th, 16th, 17th, and 19th Streets) each currently terminate before or at the project site boundary, and are proposed to connect to Bluff Road as part of the project. Some of these streets are shown as four-lane roadways under ultimate build-out conditions. Under current conditions, some street segments are currently two-lane roadways, with on-street parking and numerous side streets and driveways.

A summary of existing roadway conditions and the General Plan designations for each roadway segment, along with the associated daily LOS E capacity as indicated in Orange County Master Plan of Arterial Highways, are provided on the following chart:

Roadway Segment	Jurisdiction	Existing Mid-Block Lanes	Roadway Capacity [1]	General Plan Designation	Roadway Capacity [1]
19th Street between:					
West of Placentia Ave	Costa Mesa	2D	16,500	Primary (4D)	37,500
Placentia Ave and Harbor Blvd	Costa Mesa	4D	37,500	Primary (4D)	37,500
Harbor Blvd and Newport Blvd	Costa Mesa	6U	56,300	Primary (4D)	37,500
17th Street between:					
West of Monrovia Ave	Costa Mesa	2U	12,500	Secondary (4U)	25,000
Monrovia Ave and Placentia Ave	Costa Mesa	2U	12,500	Secondary (4U)	25,000
Placentia Ave and Superior Ave	Costa Mesa	2D	16,500	Primary (4D)	37,500
Superior Ave and Newport Blvd	Costa Mesa	4D	37,500	Primary (4D)	37,500
16th Street between:					
West of Monrovia Ave	Costa Mesa	2U	12,500	Collector (2U)	12,500
Monrovia Ave and Placentia Ave	Costa Mesa	2U	12,500	Collector (2U)	12,500
Placentia Ave and Superior Ave	Newport Beach	2U	12,500	Collector (2U)	12,500
15th Street between:					
West of Placentia Ave	Newport Beach	2U	12,500	Primary (4D)	37,500
Placentia Ave and Superior Ave	Newport Beach	2D	16,500	Secondary (4U)	25,000

[1] Source: Guidance for Administration of the Orange County Master Plan of Arterial Highways - LOS E Capacity

It is recognized that the daily traffic volumes along these roadways would increase as a result of the addition of project traffic moving to and from the project development. The project distribution assumes roughly 65% of the project traffic will travel through Southwest Costa Mesa en-route to off-site destinations. In addition, with the completion of Bluff Road and the extensions of the east-west streets (19th, 17th, 16th, and 15th Streets) to connect to Bluff Road, current traffic patterns in the area can be expected to change. A portion of the existing traffic in the area, which is currently dependent on Superior Avenue and Newport Boulevard to get to West Coast Highway, could travel along these roadways through Southwest Costa Mesa to take advantage of the new Bluff Road connection to West Coast Highway.

A screenline analysis of the daily traffic volumes on these roadways was conducted to determine the change in traffic that would result from the project, compared to Existing and Future without Project conditions. Changes in traffic volumes due to the project include both project-generated traffic, as well as existing background traffic that would change its course to take advantage of the Bluff Road connection to West Coast Highway.

A screenline analysis combines traffic volumes for a group of roadways that are parallel and/or that provide similar and alternative routes, for a composite view of traffic conditions and patterns. It is a useful tool to evaluate traffic patterns and trends in a general area where there are multiple path options that drivers can choose from to reach their destination. For this analysis, a screenline was drawn across 19th, 17th, 16th, and 15th Streets, west of Placentia Avenue, as shown on **Figure 28**.

Screenline Analysis for Existing Conditions

A summary of the existing roadway conditions and daily traffic volumes on each roadway segment crossing the screenline is presented on **Table 45**. This table summarizes the existing number of lanes, the associated daily capacity, existing daily traffic volumes, the change in traffic that will result from the project (a combination of project-generated traffic, and existing background traffic that will change its course to take advantage of the Bluff Road connection to West Coast Highway), and the resulting Existing plus Project daily traffic volumes.

As shown on the table, the total daily capacity across the screenline is currently 54,000 vehicles per day (vpd). The existing traffic volume across the screenline totals just over 30,000 vpd, or roughly 55% of the existing roadway capacity. The change in traffic due to the project is estimated to total 9,290 across the screenline. This would be an increase over existing traffic volumes of approximately 30%, and would represent approximately 17% of the existing daily capacity. With the change in traffic due to the project added to existing traffic, the total vpd across the screenline is estimated to be just over 39,700 vpd, or approximately 74% of the existing daily capacity.

This analysis indicates that sufficient roadway capacity and multiple travel route options currently exist in the Southwest Costa Mesa area adjacent to the project site to accommodate the movement of project-related traffic to and from and through the project site.

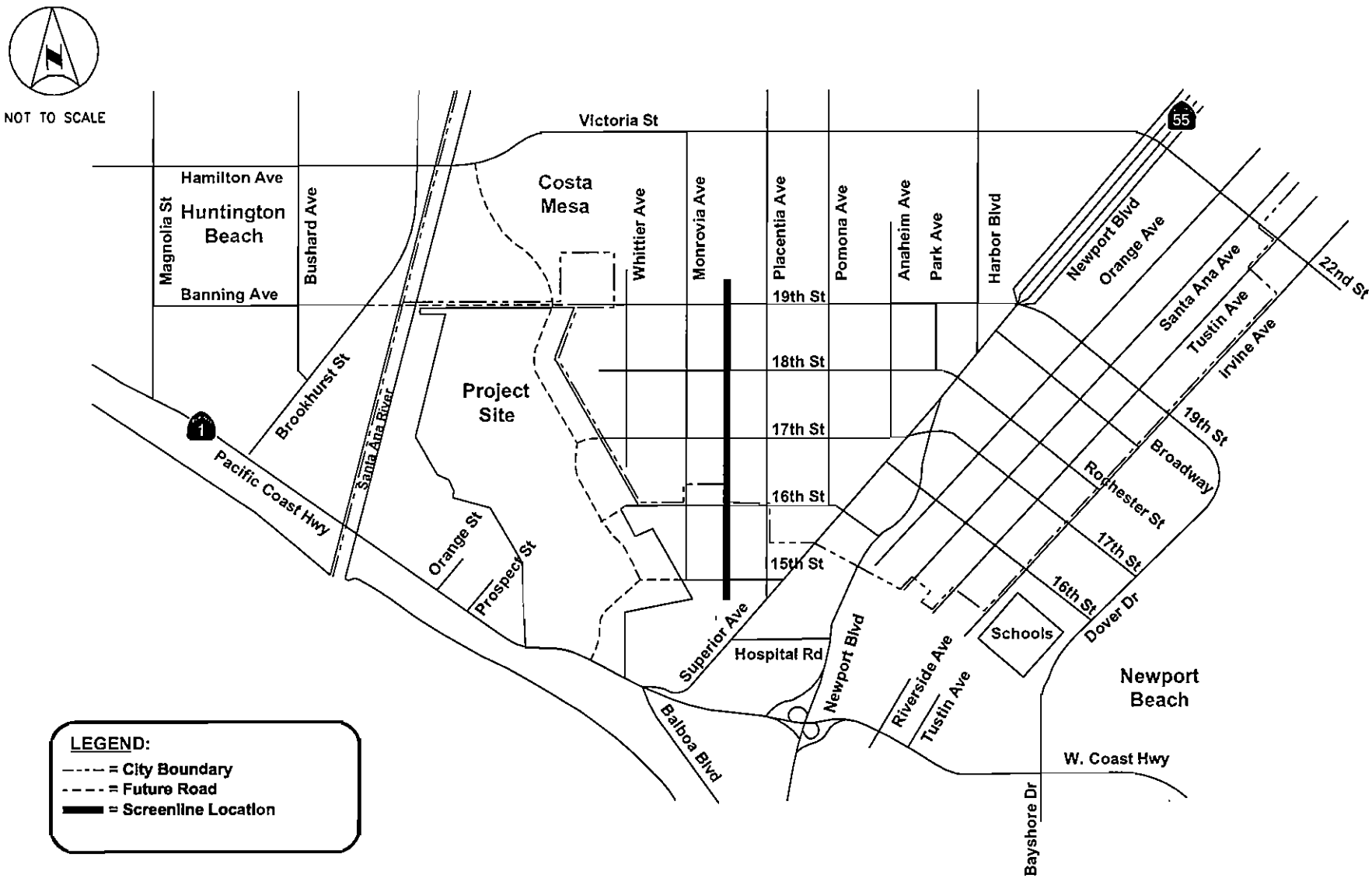

FIGURE 28
SCREENLINE LOCATION FOR DAILY ROADWAY ANALYSIS

FILENAME: Jun 30, 2011 - 5:46pm K:\ORA_TPTO\ZSAC\Projects\Banning Ranch\CAD\61h Submittal.dwg

Kimley-Horn and Associates, Inc.

TABLE 45
AVERAGE DAILY TRAFFIC SCREENLINE ANALYSIS
EXISTING NETWORK CONDITIONS

Screenline Location	Number of Lanes / Type of Arterial	LOS "E" Capacity	Existing ADT	Increase due to Project [1]	Existing Plus Project ADT
19th Street - west of Placentia Ave	2/Divided	16,500	14,980	1,896	16,876
17th Street - west of Placentia Ave	2/Undivided	12,500	7,350	3,912	11,262
16th Street - west of Placentia Ave	2/Undivided	12,500	3,400	2,200	5,600
15th Street - west of Placentia Ave	2/Undivided	12,500	4,700	3,646	8,346
Screenline Total		**54,000**	**30,430**	**11,654**	**42,084**

[1] Increases in traffic due to the project include project-generated traffic and changes in existing traffic patterns when the Bluff Road connection to West Coast Highway is complete.

Screenline Analysis for Build-out Conditions

A similar screenline analysis for the Southwest Costa Mesa area was conducted for Build-out conditions. In addition to traffic increases due to the project, additional growth in Southwest Costa Mesa is projected as a result of redevelopment and build-out of the City in accordance with the General Plan. A summary of the Build-out roadway conditions, assuming completion of the transportation network in accordance with the City's General Plan, and forecasted daily traffic volumes on each roadway segment crossing the screenline is presented in **Table 46**.

As shown on the table, at Build-out, the total daily capacity across the screenline would be 112,500 vehicles per day (vpd). The forecasted traffic volume across the screenline (without the project) totals just over 43,000 vpd, or roughly 38% of the total capacity.

The change in traffic due to the project (a combination of project-generated traffic, and background traffic that will change its course to take advantage of the Bluff Road connection to West Coast Highway) is estimated to total 9,290 across the screenline. This represents an increase over future traffic volumes of approximately 21%, and would be approximately 8% of the future capacity.

With the change in traffic due to the project added to Build-out without Project traffic, the total daily traffic volume across the screenline is estimated to be just over 52,500 vpd, which represents approximately 47% of the existing daily capacity.

With Build-out of the area network and land uses according to the General Plan, it is forecasted that sufficient roadway capacity and multiple travel route options will be provided to accommodate area traffic demands to and from and through the project site.

TABLE 46
AVERAGE DAILY TRAFFIC SCREENLINE ANALYSIS
GENERAL PLAN NETWORK CONDITIONS

Screenline Location	Number of Lanes / Type of Arterial	LOS "E" Capacity	Existing ADT	Increase due to Project [1]	Existing Plus Project ADT
19th Street - west of Placentia Ave	4/Divided	37,500	22,860	1,896	24,756
17th Street - west of Placentia Ave	4/Undivided	25,000	8,630	3,912	12,542
16th Street - west of Placentia Ave	2/Undivided	12,500	3,160	2,200	5,360
15th Street - west of Placentia Ave	4/Divided	37,500	8,630	3,646	12,276
Screenline Total		**112,500**	**43,280**	**11,654**	**54,934**

[1] Increases in traffic due to the project include project-generated traffic and changes in existing traffic patterns when the Bluff Road connection to West Coast Highway is complete.

Forecast Conditions Without the 19th Street Bridge

As mentioned previously, the Orange County MPAH reflects the extension of 19th Street from its current terminus in the City of Costa Mesa, over the Santa Ana River, connecting to Brookhurst Street at Banning Avenue in the City of Huntington Beach. All General Plan Build-out scenarios analyzed in this report have assumed the completion of the 19th Street Bridge, consistent with the Orange County MPAH. However, since the timing of the bridge is uncertain, an analysis of General Plan Build-out conditions with the Project, without the 19th Street Bridge is provided here for information purposes.

General Plan Build-out with Project –No 19th Street Bridge

General Plan Build-out peak hour traffic forecasts were developed by Urban Crossroads using the city's Newport Beach Traffic Model (NBTM). General Plan Build-out conditions with the Proposed Project and without the 19th Street Bridge are summarized on **Table 47**. Under General Plan Build-out with Project conditions, without the 19th Street Bridge, the following intersections would operate at an unacceptable Level of Service:

Newport Beach Intersection (s):

- 6. Orange Street at West Coast Highway (AM: LOS E, PM: LOS E)
- 7. Prospect Street at West Coast Highway (AM: LOS F, PM: LOS F)
- 8. Superior Avenue at West Coast Highway (AM: LOS E)
- 9. Newport Boulevard at West Coast Highway (AM: LOS E)
- 12. Dover Drive at West Coast Highway (PM: LOS E)

Huntington Beach Intersection (s):

- 15. Brookhurst Street at Hamilton Avenue (PM: LOS F)
- 19. Magnolia Street at PCH (PM: LOS E)
- 21. Brookhurst Street at PCH (AM: LOS E, PM: LOS E)

Costa Mesa Intersection (s):

- 34. Newport Boulevard at 19th Street (AM: LOS F, PM: LOS F)
- 36. Newport Boulevard at Harbor Boulevard (PM: LOS F)
- 37. Newport Boulevard at 18th Street/Rochester Street (PM: LOS F)
- 44. Newport Boulevard at 17th Street (PM: LOS E)
- 48. Irvine Avenue at 17th Street (PM: LOS E)
- 52. Bluff Road at Victoria (AM: LOS E, PM: LOS E)
- 57. Bluff Road at West Coast Highway (PM: LOS F)

Compared to the With 19th Street Bridge condition, the Without 19th Street Bridge scenario would result in nine additional intersection deficiencies, including seven intersections along West Coast Highway / PCH. Without the 19th Street Bridge, traffic would make its way down to West Coast Highway via Superior Avenue, Newport Boulevard, and through the project site via Bluff Road and the connecting east-west streets in order to get to and from destinations across the Santa Ana River.

TABLE 47
NEWPORT BANNING RANCH
SUMMARY OF INTERSECTION OPERATIONS
GENERAL PLAN BUILD-OUT WITH PROJECT - NO 19TH STREET BRIDGE

		Intersection	Control	AM Peak Hour		PM Peak Hour	
				ICU/ Delay	LOS	ICU/ Delay	LOS
Newport Beach	1	Monrovia Ave/16th St	S	0.36	A	0.36	A
	2	Placentia Ave/15th St	S	0.66	B	0.70	B
	3	Superior Ave/15th St	S	0.54	A	0.53	A
	4	Superior Ave/Placentia Ave	S	0.62	B	0.63	B
	5	Newport Blvd/Hospital Rd	S	0.63	B	0.74	C
	6	Orange St/W. Coast Hwy	S	0.93	E	0.98	E
	7	Prospect St/W. Coast Hwy	S	1.07	F	1.04	F
	8	Superior Ave/W. Coast Hwy	S	0.93	E	0.90	D
	9	Newport Blvd/W. Coast Hwy	S	0.91	E	0.88	D
	10	Riverside Ave/W. Coast Hwy	S	0.75	C	0.90	D
	11	Tustin Ave/W. Coast Hwy	S	0.62	B	0.84	D
	12	Dover Dr/W. Coast Hwy	S	0.81	D	0.92	E
Huntington Beach	13	Magnolia St/Hamilton Ave	S	0.73	C	0.75	C
	14	Bushard St/Hamilton Ave	S	0.54	A	0.66	B
	15	Brookhurst St/Hamilton Ave (Victoria St)	S	0.81	D	1.06	F
	16	Magnolia St/Banning Ave	S	0.22	A	0.29	A
	17	Bushard St/Banning Ave	S	0.26	A	0.26	A
	18	Brookhurst St/Banning Ave	S	0.19	A	0.20	A
	19	Magnolia St/Pacific Coast Hwy	S	0.82	D	0.92	E
	20	Brookhurst St/Bushard St	S	0.39	A	0.41	A
	21	Brookhurst St/Pacific Coast Hwy	S	0.94	E	0.99	E
Costa Mesa	22	Placentia Ave/Victoria St	S	0.75	C	0.82	D
	23	Pomona Ave/Victoria St	S	0.69	B	0.83	D
	24	Harbor Blvd/Victoria St	S	0.68	B	0.80	C
	25	Newport Blvd/Victoria St	S	0.48	A	0.44	A
	26	Newport Blvd /Victoria St (22nd St)	S	0.88	D	0.53	A
	27	Whittier Ave/19th St	S	0.39	A	0.47	A
	28	Monrovia Ave/19th St	S	0.40	A	0.37	A
	29	Placentia Ave/19th St	S	0.44	A	0.51	A
	30	Pomona Ave/19th St	S	0.51	A	0.72	C
	31	Anaheim Ave/19th St	S	0.57	A	0.66	B
	32	Park Ave/19th St	S	0.50	A	0.59	A
	33	Harbor Blvd/19th St	S	0.44	A	0.61	B
	34	Newport Blvd/19th St	S	1.05	F	1.01	F
	35	Newport Blvd/Broadway	S	0.68	B	0.85	D
	36	Newport Blvd/Harbor Blvd	S	0.78	C	1.11	F
	37	Newport Blvd/18th St (Rochester St)	S	0.80	C	1.07	F
	38	Placentia Ave/18th St	S	0.48	A	0.52	A
	39	Whittier Ave/17th St	S	0.34	A	0.44	A
	40	Monrovia Ave/17th St	S	0.34	A	0.44	A
	41	Placentia Ave/17th St	S	0.44	A	0.51	A
	42	Pomona Ave/17th St	S	0.49	A	0.51	A
	43	Superior Ave/17th St	S	0.81	D	0.81	D
	44	Newport Blvd/17th St	S	0.82	D	0.92	E
	45	Orange Ave/17th St	S	0.43	A	0.62	B
	46	Santa Ana Ave/17th St	S	0.43	A	0.50	A
	47	Tustin Ave/17th St	S	0.44	A	0.59	A
	48	Irvine Ave/17th St	S	0.64	B	0.92	E
	49	Placentia Ave/16th St	S	0.38	A	0.38	A
	50	Superior Ave/16th St	S	0.58	A	0.53	A
	51	Newport Blvd/16th St	S	0.68	B	0.75	C
	52	Bluff Rd/Victoria St	S	1.00	E	0.97	E

TABLE 47
NEWPORT BANNING RANCH
SUMMARY OF INTERSECTION OPERATIONS
GENERAL PLAN BUILD-OUT WITH PROJECT - NO 19TH STREET BRIDGE

		Intersection	Control	AM Peak Hour		PM Peak Hour	
				ICU/ Delay	LOS	ICU/ Delay	LOS
On-Site	53	Bluff Rd/19th St	S	0.41	A	0.39	A
	54	Bluff Rd/17th St	S	0.36	A	0.39	A
	55	Bluff Rd/16th St	U	3.2	A	4.0	A
	56	Bluff Rd/15th St	S	0.62	B	0.83	D
	57	Bluff Rd/W. Coast Hwy	S	0.85	D	1.05	**F**

Notes:
S = Signalized, U=Unsignalized
Bold and shaded values indicate intersections operating at LOS E or F.
Intersection operation is expressed in average seconds of delay per vehicle during the peak hour for unsignalized intersections using the HCM 2000 Methodology and is expressed in volume-to-capacity (v/c) for signalized intersections using the ICU Methodology.

General Plan Build-out with Project – Bluff Road Alternative – No 19th Street Bridge

A similar analysis was conducted for General Plan Build-out conditions with the Project – Bluff Road Alternative, without the 19th Street Bridge. Results are summarized on **Table 48,** which indicates that the following intersections would operate at an unacceptable Level of Service:

Newport Beach Intersection (s):

- 6. Orange Street at West Coast Highway (AM: LOS E, PM: LOS E)
- 7. Prospect Street at West Coast Highway (AM: LOS F, PM: LOS F)
- 8. Superior Avenue at West Coast Highway (AM: LOS E)
- 9. Newport Boulevard at West Coast Highway (AM: LOS E)
- 12. Dover Drive at West Coast Highway (PM: LOS E)

Huntington Beach Intersection (s):

- 15. Brookhurst Street at Hamilton Avenue (PM: LOS E)
- 19. Magnolia Street at PCH (PM: LOS E)
- 21. Brookhurst Street at PCH (AM: LOS E, PM: LOS F)

Costa Mesa Intersection (s):

- 34. Newport Boulevard at 19th Street (AM: LOS F, PM: LOS F)
- 36. Newport Boulevard at Harbor Boulevard (PM: LOS F)
- 37. Newport Boulevard at 18th Street/Rochester Street (PM: LOS F)
- 44. Newport Boulevard at 17th Street (PM: LOS E)
- 48. Irvine Avenue at 17th Street (PM: LOS E)
- 57. Bluff Road at West Coast Highway (PM: LOS F)

In both cases, without the 19th Street Bridge, more traffic would make its way down to West Coast Highway through the project site via Bluff Road and the connecting east-west streets to get to and from destinations across the Santa Ana River, resulting in seven deficiencies along the local east-west streets in southwest Costa Mesa. Traffic demands will increase along the two nearest east/west arterials across the Santa Ana River – West Coast Highway and Hamilton/Victoria Street, resulting in seven additional deficiencies along West Coast Highway, and one additional deficiency along Hamilton/Victoria Street. These findings are consistent with the results and conclusions of the traffic analysis for the most recent City of Newport Beach General Plan Update.

REDUCED DEVELOPMENT ALTERNATIVES

A number of reduced development alternatives were identified for consideration. The alternatives represent a variety of development plans that contemplate varying reductions in development area or development density. A qualitative review of the alternatives was prepared, and a summary of the trip generation characteristics of these alternatives is provided in ***Appendix N*** of this report.

TABLE 48
NEWPORT BANNING RANCH
SUMMARY OF INTERSECTION OPERATIONS
GENERAL PLAN BUILD-OUT WITH PROJECT - BLUFF ROAD ALTERNATIVE - NO 19TH STREET BRIDGE

		Intersection	Control	AM Peak Hour		PM Peak Hour	
				ICU/ Delay	LOS	ICU/ Delay	LOS
Newport Beach	1	Monrovia Ave/16th St	S	0.34	A	0.36	A
	2	Placentia Ave/15th St	S	0.62	B	0.60	A
	3	Superior Ave/15th St	S	0.53	A	0.49	A
	4	Superior Ave/Placentia Ave	S	0.60	A	0.64	B
	5	Newport Blvd/Hospital Rd	S	0.64	B	0.75	C
	6	Orange St/W. Coast Hwy	S	0.91	E	0.99	E
	7	Prospect St/W. Coast Hwy	S	1.05	F	1.04	F
	8	Superior Ave/W. Coast Hwy	S	0.91	E	0.89	D
	9	Newport Blvd/W. Coast Hwy	S	0.91	E	0.88	D
	10	Riverside Ave/W. Coast Hwy	S	0.73	C	0.88	D
	11	Tustin Ave/W. Coast Hwy	S	0.60	A	0.83	D
	12	Dover Dr/W. Coast Hwy	S	0.80	C	0.92	E
Huntington Beach	13	Magnolia St/Hamilton Ave	S	0.73	C	0.75	C
	14	Bushard St/Hamilton Ave	S	0.55	A	0.67	B
	15	Brookhurst St/Hamilton Ave (Victoria St)	S	0.74	C	0.98	E
	16	Magnolia St/Banning Ave	S	0.22	A	0.29	A
	17	Bushard St/Banning Ave	S	0.27	A	0.25	A
	18	Brookhurst St/Banning Ave	S	0.17	A	0.18	A
	19	Magnolia St/Pacific Coast Hwy	S	0.79	C	0.93	E
	20	Brookhurst St/Bushard St	S	0.42	A	0.44	A
	21	Brookhurst St/Pacific Coast Hwy	S	0.93	E	1.02	F
Costa Mesa	22	Placentia Ave/Victoria St	S	0.76	C	0.83	D
	23	Pomona Ave/Victoria St	S	0.70	B	0.81	D
	24	Harbor Blvd/Victoria St	S	0.67	B	0.80	C
	25	Newport Blvd/Victoria St	S	0.49	A	0.44	A
	26	Newport Blvd /Victoria St (22nd St)	S	0.88	D	0.53	A
	27	Whittier Ave/19th St	S	0.48	A	0.57	A
	28	Monrovia Ave/19th St	S	0.46	A	0.44	A
	29	Placentia Ave/19th St	S	0.45	A	0.50	A
	30	Pomona Ave/19th St	S	0.53	A	0.71	C
	31	Anaheim Ave/19th St	S	0.57	A	0.67	B
	32	Park Ave/19th St	S	0.50	A	0.59	A
	33	Harbor Blvd/19th St	S	0.44	A	0.61	B
	34	Newport Blvd/19th St	S	1.04	F	1.01	F
	35	Newport Blvd/Broadway	S	0.68	B	0.86	D
	36	Newport Blvd/Harbor Blvd	S	0.78	C	1.12	F
	37	Newport Blvd/18th St (Rochester St)	S	0.80	C	1.08	F
	38	Placentia Ave/18th St	S	0.51	A	0.56	A
	39	Whittier Ave/17th St	S	0.39	A	0.43	A
	40	Monrovia Ave/17th St	S	0.31	A	0.43	A
	41	Placentia Ave/17th St	S	0.49	A	0.61	B
	42	Pomona Ave/17th St	S	0.49	A	0.53	A
	43	Superior Ave/17th St	S	0.82	D	0.82	D
	44	Newport Blvd/17th St	S	0.82	D	0.92	E
	45	Orange Ave/17th St	S	0.43	A	0.63	B
	46	Santa Ana Ave/17th St	S	0.42	A	0.49	A
	47	Tustin Ave/17th St	S	0.44	A	0.59	A
	48	Irvine Ave/17th St	S	0.64	B	0.92	E
	49	Placentia Ave/16th St	S	0.37	A	0.40	A
	50	Superior Ave/16th St	S	0.58	A	0.54	A
	51	Newport Blvd/16th St	S	0.70	B	0.75	C
	52	Bluff Rd/Victoria St	S	0.88	D	0.90	D

TABLE 48
NEWPORT BANNING RANCH
SUMMARY OF INTERSECTION OPERATIONS
GENERAL PLAN BUILD-OUT WITH PROJECT - BLUFF ROAD ALTERNATIVE - NO 19TH STREET BRIDGE

		Intersection	Control	AM Peak Hour		PM Peak Hour	
				ICU/ Delay	LOS	ICU/ Delay	LOS
On-Site	53	Bluff Rd/19th St	S	0.52	A	0.48	A
	54	Bluff Rd/17th St	S	0.32	A	0.36	A
	55	Bluff Rd/16th St	U	3.9	A	4.3	A
	56	Bluff Rd/15th St	S	0.61	B	0.85	D
	57	Bluff Rd/W. Coast Hwy	S	0.82	D	1.04	F

Notes:
S = Signalized, U=Unsignalized
Bold and shaded values indicate intersections operating at LOS E or F.
Intersection operation is expressed in average seconds of delay per vehicle during the peak hour for unsignalized intersections using the HCM 2000 Methodology and is expressed in volume-to-capacity (v/c) for signalized intersections using the ICU Methodology.

SUMMARY OF FINDINGS AND CONCLUSIONS

- The Newport Banning Ranch applicant proposes to develop the 401-acre Banning Ranch property, located on the north side of West Coast Highway, west of Superior Avenue. The proposed project would allow development of up to 1,375 residential dwelling units, 75,000 square feet of commercial development, 75 resort hotel units, and 28 acres of community park on the site.

- A Phase 1 project analysis has also been conducted to satisfy the requirements of the City of Newport Beach Traffic Phasing Ordinance (TPO), sub-section 030.B.2.b. Phase 1 assumes the construction of 87 residential condominium/townhouse dwelling units, 141 single-family dwelling units, and the dedication of 6.3 acres of land for a City park. Bluff Road would be partially constructed from West Coast Highway to 16th Street for Phase 1.

- Fifty-seven (58) intersections were analyzed for potential traffic impacts. All intersections were analyzed using the Intersection Capacity Utilization (ICU) methodology. In addition, ten (10) intersections along West Coast Highway and nine (9) intersections along SR-55/Newport Boulevard were also analyzed using the Highway Capacity Manual (HCM) methodology to satisfy Caltrans requirements.

- Under ***Existing Conditions***, the following intersections currently operate below acceptable levels of service.

  Costa Mesa Intersection (s):
  - 26. Newport Boulevard at Victoria Street/22nd Street (AM: LOS E)
  - 36. Newport Boulevard at Harbor Boulevard (PM: LOS E)
  - 37. Newport Boulevard at 18th Street/Rochester Street (PM: LOS E)

- Under ***Year 2016 without Project – TPO Analysis***, the following intersections would operate below acceptable levels of service.

  Costa Mesa Intersection (s):
  - 26. Newport Boulevard at Victoria Street/22nd Street (AM: LOS F)
  - 36. Newport Boulevard at Harbor Boulevard (PM: LOS F)
  - 37. Newport Boulevard at 18th Street/Rochester Street (PM: LOS F)

- Under ***Year 2016 Cumulative Conditions without Project***, the following intersections would operate below acceptable levels of service.

  Newport Beach Intersection (s):
  - 9. Newport Boulevard at West Coast Highway (AM: LOS E)

Costa Mesa Intersection (s):

- 26. Newport Boulevard at Victoria Street/22nd Street (AM: LOS F)
- 36. Newport Boulevard at Harbor Boulevard (PM: LOS F)
- 37. Newport Boulevard at 18th Street/Rochester Street (PM: LOS F)

- The Proposed Project is forecasted to generate 14,989 daily trips, with 906 AM peak hour trips and 1,430 PM peak hour trips. Phase 1 is forecasted to generate 1,868 daily trips, with 144 AM peak hour trips and 187 PM peak hour trips.

- Under ***Existing Plus Project Conditions***, the following intersections would operate below acceptable levels of service.

Costa Mesa Intersection (s):

- 26. Newport Boulevard at Victoria Street/22nd Street (AM: LOS E)
- 36. Newport Boulevard at Harbor Boulevard (PM: LOS F)
- 37. Newport Boulevard at 18th Street/Rochester Street (PM: LOS F)
- 43. Superior Avenue at 17th Street (PM: LOS E)

The addition of project-related traffic would result in a significant impact at the following intersections:

- 36. Newport Boulevard at Harbor Boulevard (PM: LOS F – project impact 0.079)
- 37. Newport Boulevard at 18th Street/Rochester Street (PM: LOS F – project impact 0.080)
- 43. Superior Avenue at 17th Street (PM: LOS E – project impact 0.165)

- Under ***Existing Plus Project Conditions – Bluff Road Alternative,*** the following intersections would operate below acceptable levels of service.

Costa Mesa Intersection (s):

- 26. Newport Boulevard at Victoria Street/22nd Street (AM: LOS E)
- 36. Newport Boulevard at Harbor Boulevard (PM: LOS F)
- 37. Newport Boulevard at 18th Street/Rochester Street (PM: LOS F)
- 42. Pomona Avenue at 17th Street (PM: LOS E)
- 43. Superior Avenue at 17th Street (PM: LOS E)

The addition of project-related traffic would result in a significant impact at the following intersections:

Costa Mesa Intersection (s):

- 36. Newport Boulevard at Harbor Boulevard (PM: LOS F – project impact 0.099)
- 37. Newport Boulevard at 18th Street/Rochester Street (PM: LOS F – project impact 0.045)
- 42. Pomona Avenue at 17th Street (PM: LOS E – LOS E at an unsignalized intersection)
- 43. Superior Avenue at 17th Street (PM: LOS E – project impact 0.196)

- Under ***Year 2016 with Proposed Project – TPO Analysis***, the following intersections would operate below acceptable levels of service.

  Newport Beach Intersection (s):
  - 9. Newport Boulevard at West Coast Highway (AM: LOS E)

  Costa Mesa Intersection (s):
  - 26. Newport Boulevard at Victoria Street/22nd Street (AM: LOS F)
  - 28. Monrovia Avenue at 19th Street (AM: LOS E)
  - 34. Newport Boulevard at 19th Street (AM: LOS E)
  - 36. Newport Boulevard at Harbor Boulevard (PM: LOS F)
  - 37. Newport Boulevard at 18th Street/Rochester Street (PM: LOS F)
  - 42. Pomona Avenue at 17th Street (PM: LOS E)
  - 43. Superior Avenue at 17th Street (PM: LOS E)
  - 44. Newport Boulevard at 17th Street (PM: LOS E)

  The addition of project-related traffic would result in a significant impact at the following intersections:

  Newport Beach Intersection (s):
  - 9. Newport Boulevard at West Coast Highway (AM: LOS E – project impact 0.024)

  Costa Mesa Intersection (s):
  - 28. Monrovia Avenue at 19th Street (AM: LOS E – project impact, LOS E operations)
  - 34. Newport Boulevard at 19th Street (AM: LOS E – project impact 0.51)
  - 36. Newport Boulevard at Harbor Boulevard (PM: LOS F – project impact 0.079)
  - 37. Newport Boulevard at 18th Street/Rochester Street (PM: LOS F – project impact 0.080).
  - 42. Pomona Avenue at 17th Street (PM: LOS E – project impact, LOS E operations)
  - 43. Superior Avenue at 17th Street (PM: LOS E – project impact 0.165)
  - 44. Newport Boulevard at 17th Street (PM: LOS E – project impact 0.036)

- Under ***Year 2016 with Project – Bluff Road Alternative – TPO Analysis***, the following intersections would operate below acceptable levels of service.

  Newport Beach Intersection (s):
  - 9. Newport Boulevard at West Coast Highway (AM: LOS E)

  Costa Mesa Intersection (s):
  - 26. Newport Boulevard at Victoria Street/22nd Street (AM: LOS F)
  - 36. Newport Boulevard at Harbor Boulevard (PM: LOS F)
  - 37. Newport Boulevard at 18th Street/Rochester Street (PM: LOS F)

- 42. Pomona Avenue at 17th Street (PM: LOS F)
- 43. Superior Avenue at 17th Street (PM: LOS F)
- 44. Newport Boulevard at 17th Street (PM: LOS E)

The addition of project-related traffic would result in a significant impact at the following intersections:

Newport Beach Intersection (s):

- 9. Newport Boulevard at West Coast Highway (AM: LOS E – project impact 0.021)

Costa Mesa Intersection (s):

- 36. Newport Boulevard at Harbor Boulevard (PM: LOS F – project impact 0.099)
- 37. Newport Boulevard at 18th Street/Rochester Street (PM: LOS F – project impact 0.100)
- 42. Pomona Avenue at 17th Street (PM: LOS E – project impact, LOS E operations)
- 43. Superior Avenue at 17th Street (PM: LOS F – project impact 0.196)
- 44. Newport Boulevard at 17th Street (PM: LOS E – project impact 0.053)

- Under ***Year 2016 Phase 1 Project – TPO Analysis***, the following intersections would operate below acceptable levels of service.

Newport Beach Intersection (s):

- 9. Newport Boulevard at West Coast Highway (AM: LOS E)

Costa Mesa Intersection (s):

- 26. Newport Boulevard at Victoria Street/22nd Street (AM: LOS F)
- 36. Newport Boulevard at Harbor Boulevard (PM: LOS F)
- 37. Newport Boulevard at 18th Street/Rochester Street (PM: LOS F)

The addition of project-related traffic would result in a significant impact at the following intersections:

Newport Beach Intersection (s):

- 9. Newport Boulevard at West Coast Highway (AM: LOS E – project impact, LOS E operations)

Costa Mesa Intersection (s):

- 36. Newport Boulevard at Harbor Boulevard (PM: LOS F – project impact 0.012)
- 37. Newport Boulevard at 18th Street/Rochester Street (PM: LOS F – project impact 0.013).

- Under ***Year 2016 Cumulative Conditions with Proposed Project***, the following intersections would operate below acceptable levels of service.

Newport Beach Intersection (s):

- 9. Newport Boulevard at West Coast Highway (AM: LOS E)

Costa Mesa Intersection (s):

- 26. Newport Boulevard at Victoria Street/22nd Street (AM: LOS F)
- 28. Monrovia Avenue at 19th Street (AM: LOS E)
- 34. Newport Boulevard at 19th Street (PM: LOS E)
- 36. Newport Boulevard at Harbor Boulevard (PM: LOS F)
- 37. Newport Boulevard at 18th Street/Rochester Street (PM: LOS F)
- 42. Pomona Avenue at 17th Street (PM: LOS F)
- 43. Superior Avenue at 17th Street (PM: LOS E)
- 44. Newport Boulevard at 17th Street (PM: LOS E)

The addition of project-related traffic would result in a significant impact at the following intersections:

Newport Beach Intersection (s):

- 9. Newport Boulevard at West Coast Highway (AM: LOS E – project impact 0.024)

Costa Mesa Intersection (s):

- 28. Monrovia Avenue at 19th Street (PM: LOS E – project impact, LOS E operations)
- 34. Newport Boulevard at 19th Street (PM: LOS E – project impact 0.050)
- 36. Newport Boulevard at Harbor Boulevard (PM: LOS F – project impact 0.080)
- 37. Newport Boulevard at 18th Street/Rochester Street (PM: LOS F – project impact 0.080)
- 42. Pomona Avenue at 17th Street (PM: LOS E – project impact, LOS E operations)
- 43. Superior Avenue at 17th Street (PM: LOS F – project impact 0.165)
- 44. Newport Boulevard at 17th Street (PM: LOS E – project impact 0.039)

- Under ***Year 2016 Cumulative Conditions with Project Bluff Road Alternative***, the following intersections would operate below acceptable levels of service.

Newport Beach Intersection (s):

- 9. Newport Boulevard at West Coast Highway (AM: LOS E)

Costa Mesa Intersection (s):

- 26. Newport Boulevard at Victoria Street/22nd Street (AM: LOS F)
- 34. Newport Boulevard at 19th Street (AM: LOS E)
- 36. Newport Boulevard at Harbor Boulevard (PM: LOS F)
- 37. Newport Boulevard at 18th Street/Rochester Street (PM: LOS F)
- 42. Pomona Avenue at 17th Street (PM: LOS F)
- 43. Superior Avenue at 17th Street (PM: LOS F)
- 44. Newport Boulevard at 17th Street (PM: LOS E)

The addition of project-related traffic would result in a significant impact at the following intersections:

Newport Beach Intersection (s):

- 9. Newport Boulevard at West Coast Highway (AM: LOS E – project impact 0.022)

Costa Mesa Intersection (s):

- 34. Newport Boulevard at 19th Street (AM: LOS E – project impact 0.047)
- 36. Newport Boulevard at Harbor Boulevard (PM: LOS F – project impact 0.100)
- 37. Newport Boulevard at 18th Street/Rochester Street (PM: LOS F – project impact 0.100)
- 42. Pomona Avenue at 17th Street (PM: LOS E – project impact, LOS F operations)
- 43. Superior Avenue at 17th Street (PM: LOS E – project impact 0.196)
- 44. Newport Boulevard at 17th Street (PM: LOS E – project impact 0.055)

- Under ***Year 2016 Cumulative Conditions with Phase 1 Project***, the following intersections would operate below acceptable levels of service.

Newport Beach Intersection (s):

- 9. Newport Boulevard at West Coast Highway (AM: LOS E)

Costa Mesa Intersection (s):

- 26. Newport Boulevard at Victoria Street/22nd Street (AM: LOS F)
- 36. Newport Boulevard at Harbor Boulevard (PM: LOS F)
- 37. Newport Boulevard at 18th Street/Rochester Street (PM: LOS F)

The addition of project-related traffic would result in a significant impact at the following intersections:

Costa Mesa Intersection (s):

- 36. Newport Boulevard at Harbor Boulevard (PM: LOS F – project impact 0.013)
- 37. Newport Boulevard at 18th Street/Rochester Street (PM: LOS F – project impact 0.013)

- Under ***General Plan Build-out No Development***, the following intersections would operate below acceptable levels of service.

Huntington Beach Intersection (s):

- 19. Magnolia Street at Pacific Coast Highway (PM: LOS F)

Costa Mesa Intersection (s):

- 34. Newport Boulevard at 19th Street (AM: LOS F, PM: LOS F)
- 36. Newport Boulevard at Harbor Boulevard (PM: LOS F)
- 37. Newport Boulevard at 18th Street/Rochester Street (PM: LOS F)

- 44. Newport Boulevard at 17th Street (PM: LOS E)
- 48. Irvine Avenue at 17th Street (PM: LOS E)

Of the intersections forecasted to operate deficiently, four intersections are unsignalized, as indicated above. The unsignalized deficient intersections were further analyzed to determine if the forecasted conditions satisfy signal warrant criteria. Based on the results of the signal warrant analysis, the forecasted traffic volumes at each of these intersections would satisfy signal warrant criteria for Warrant 3. For all subsequent General Plan analyses these intersections are assumed to be signalized.

- Under ***General Plan Build-out with Proposed Project***, the following intersections would operate below acceptable levels of service.

Huntington Beach Intersection (s):

- 19. Magnolia Street at Pacific Coast Highway (PM: LOS F)

Costa Mesa Intersection (s):

- 34. Newport Boulevard at 19th Street (AM: LOS F, PM: LOS F)
- 36. Newport Boulevard at Harbor Boulevard (PM: LOS F)
- 37. Newport Boulevard at 18th Street/Rochester Street (PM: LOS F)
- 44. Newport Boulevard at 17th Street (PM: LOS E)
- 48. Irvine Avenue at 17th Street (PM: LOS E)

The addition of project-related traffic would result in a significant impact at the following intersections:

Costa Mesa Intersection (s):

- 34. Newport Boulevard at 19th Street (AM: LOS F – project impact 0.011)
- 36. Newport Boulevard at Harbor Boulevard (PM: LOS F – project impact 0.011)

- Under ***General Plan Build-out with Project – Bluff Road Alternative***, the following intersections would operate below acceptable levels of service.

Huntington Beach Intersection (s):

- 19. Magnolia Street at Pacific Coast Highway (PM: LOS F)

Costa Mesa Intersection (s):

- 34. Newport Boulevard at 19th Street (AM: LOS F, PM: LOS F)
- 36. Newport Boulevard at Harbor Boulevard (PM: LOS F)
- 37. Newport Boulevard at 18th Street/Rochester Street (PM: LOS F)
- 44. Newport Boulevard at 17th Street (PM: LOS E)
- 48. Irvine Avenue at 17th Street (PM: LOS E)

The addition of project-related traffic would result in a significant impact at the following intersections:

Costa Mesa Intersection (s):

- 34. Newport Boulevard at 19th Street (AM: LOS F – project impact 0.023)
- 36. Newport Boulevard at Harbor Boulevard (PM: LOS F – project impact 0.021)
- 37. Newport Boulevard at 18th Street/Rochester Street (PM: LOS F – project impact 0.016)
- 44. Newport Boulevard at 17th Street (PM: LOS E – project impact 0.012)

- Under ***General Plan Build-out with Project and Full MPAH Network***, the following intersections would operate below acceptable levels of service.

Newport Beach Intersection (s):

- 9. Newport Boulevard at Coast Highway (AM: LOS F)

Huntington Beach Intersection (s):

- 15. Brookhurst Street at Hamilton Avenue (PM: LOS E)
- 19. Magnolia Street at Pacific Coast Highway (PM: LOS F)
- 21. Brookhurst Street at Pacific Coast Highway (PM: LOS E)

Costa Mesa Intersection (s):

- 34. Newport Boulevard at 19th Street (AM: LOS F, PM: LOS F)
- 36. Newport Boulevard at Harbor Boulevard (PM: LOS F)
- 37. Newport Boulevard at 18th Street/Rochester Street (PM: LOS F)
- 44. Newport Boulevard at 17th Street (PM: LOS E)
- 48. Irvine Avenue at 17th Street (PM: LOS E)
- 52. Bluff Road at Victoria Street (AM: LOS E)

- Under ***General Plan Build-out Open Space Alternative with Bluff Road*** conditions, the following intersections would operate below acceptable levels of service.

Huntington Beach Intersection (s):

- 19. Magnolia Street at Pacific Coast Highway (PM: LOS F)

Costa Mesa Intersection (s):

- 34. Newport Boulevard at 19th Street (AM: LOS F, PM: LOS F)
- 36. Newport Boulevard at Harbor Boulevard (PM: LOS F)
- 37. Newport Boulevard at 18th Street/Rochester Street (PM: LOS F)
- 44. Newport Boulevard at 17th Street (PM: LOS E)
- 48. Irvine Avenue at 17th Street (PM: LOS E)

- Under ***General Plan Build-out Open Space Alternative without Bluff Road***, the following intersections would operate below acceptable levels of service.

Huntington Beach Intersection (s):

- 19. Magnolia Street at Pacific Coast Highway (PM: LOS F)

Costa Mesa Intersection (s):

- 34. Newport Boulevard at 19th Street (AM: LOS F, PM: LOS F)
- 36. Newport Boulevard at Harbor Boulevard (PM: LOS F)
- 37. Newport Boulevard at 18th Street/Rochester Street (PM: LOS F)
- 44. Newport Boulevard at 17th Street (PM: LOS E)
- 48. Irvine Avenue at 17th Street (PM: LOS E)

- Improvements were identified to mitigate the project's significant impacts under each scenario. Mitigation measures for intersections in the City of Huntington Beach or Costa Mesa will be subject to the approval of that city. In addition, mitigation measures at intersections located on a State Highway will be subject to the review and approval of Caltrans.

- A separate analysis of intersections on State Highway (Caltrans) facilities was conducted. Intersection analysis was conducted using the Highway Capacity Manual (HCM) average delay methodology, in accordance with the Caltrans Guide for the Preparation of Traffic Impact Studies.

- Based on the HCM intersection methodology, the addition of project-related traffic would not cause additional intersections to operate at LOS D or worse, and would not cause the Level of Service to worsen at any intersection already operating at LOS D or worse.

- A separate analysis of peak hour operating conditions was conducted to evaluate General Plan Build-out conditions without the 19th Street Bridge over the Santa Ana River. Compared to the With 19th Street Bridge condition, the No 19th Street Bridge scenario would result in additional intersection deficiencies along West Coast Highway / PCH, and along the east-west streets through Southwest Costa Mesa. Without the 19th Street Bridge, traffic would make its way down to West Coast Highway via Superior Avenue, Newport Boulevard, and through the project site via Bluff Road and the connecting east-west streets in order to get to and from destinations across the Santa Ana River.

APPENDIX A

TRAFFIC COUNT DATA COLLECTION SHEETS

Transportation Studies, Inc.

2860 Walnut Avenue, Suite C
Tustin, CA. 92780

City: COSTA MESA
N-S Direction: MONROVIA AVENUE
E-W Direction: 16TH STREET

File Name : H0905012
Site Code : 00000979
Start Date : 5/5/2009
Page No : 1

Groups Printed- Vehicles

	MONROVIA AVENUE Southbound			16TH STREET Westbound			MONROVIA AVENUE Northbound			16TH STREET Eastbound			
Start Time	Right	Thru	Left	Right	Thru	Left	Right	Thru	Left	Right	Thru	Left	Int. Total
Factor	1.0	1.0	1.0	1.0	1.0	1.0	1.0	1.0	1.0	1.0	1.0	1.0	
07:00 AM	3	12	4	9	15	4	2	5	0	0	7	0	61
07:15 AM	4	12	3	5	4	11	3	8	1	0	5	1	57
07:30 AM	4	20	4	12	7	34	12	19	0	4	5	1	122
07:45 AM	3	29	13	10	15	44	22	33	1	2	5	2	179
Total	14	73	24	36	41	93	39	65	2	6	22	4	419
08:00 AM	8	17	10	10	9	12	11	19	2	1	6	3	108
08:15 AM	4	38	8	12	13	22	9	21	1	3	4	3	138
08:30 AM	9	22	8	11	19	10	6	11	3	1	6	2	108
08:45 AM	14	20	12	16	17	11	5	17	3	5	9	4	133
Total	35	97	38	49	58	55	31	68	9	10	25	12	487
*** BREAK ***													
04:30 PM	3	32	3	10	3	5	6	25	3	11	27	15	143
04:45 PM	8	22	11	12	8	2	7	12	4	4	15	6	111
Total	11	54	14	22	11	7	13	37	7	15	42	21	254
05:00 PM	2	17	7	6	9	5	5	15	1	3	17	9	96
05:15 PM	4	24	8	3	3	6	5	21	0	3	11	7	95
05:30 PM	0	21	7	7	0	2	7	17	1	2	5	6	75
05:45 PM	0	17	7	6	4	3	1	17	0	1	5	5	66
Total	6	79	29	22	16	16	18	70	2	9	38	27	332
06:00 PM	1	9	1	2	1	1	1	14	0	2	13	6	51
06:15 PM	2	13	2	2	2	3	0	13	0	3	4	4	48
Grand Total	69	325	108	133	129	175	102	267	20	45	144	74	1591
Apprch %	13.7	64.7	21.5	30.4	29.5	40	26.2	68.6	5.1	17.1	54.8	28.1	
Total %	4.3	20.4	6.8	8.4	8.1	11	6.4	16.8	1.3	2.8	9.1	4.7	

Transportation Studies, Inc.

2860 Walnut Avenue, Suite C
Tustin, CA. 92780

File Name : H0905012
Site Code : 00000979
Start Date : 5/5/2009
Page No : 2

	MONROVIA AVENUE Southbound				16TH STREET Westbound				MONROVIA AVENUE Northbound				16TH STREET Eastbound				
Start Time	Right	Thru	Left	App. Total	Right	Thru	Left	App. Total	Right	Thru	Left	App. Total	Right	Thru	Left	App. Total	Int. Total
Peak Hour Analysis From 07:00 AM to 08:45 AM - Peak 1 of 1																	
Peak Hour for Entire Intersection Begins at 07:30 AM																	
07:30 AM	4	20	4	28	**12**	7	34	53	12	19	0	31	**4**	5	1	**10**	122
07:45 AM	3	29	**13**	45	10	**15**	**44**	**69**	**22**	**33**	1	**56**	2	5	2	9	**179**
08:00 AM	**8**	17	10	35	10	9	12	31	11	19	**2**	32	1	**6**	**3**	10	108
08:15 AM	4	**38**	8	**50**	12	13	22	47	9	21	1	31	3	4	3	10	138
Total Volume	19	104	35	158	44	44	112	200	54	92	4	150	10	20	9	39	547
% App. Total	12	65.8	22.2		22	22	56		36	61.3	2.7		25.6	51.3	23.1		
PHF	.594	.684	.673	.790	.917	.733	.636	.725	.614	.697	.500	.670	.625	.833	.750	.975	.764

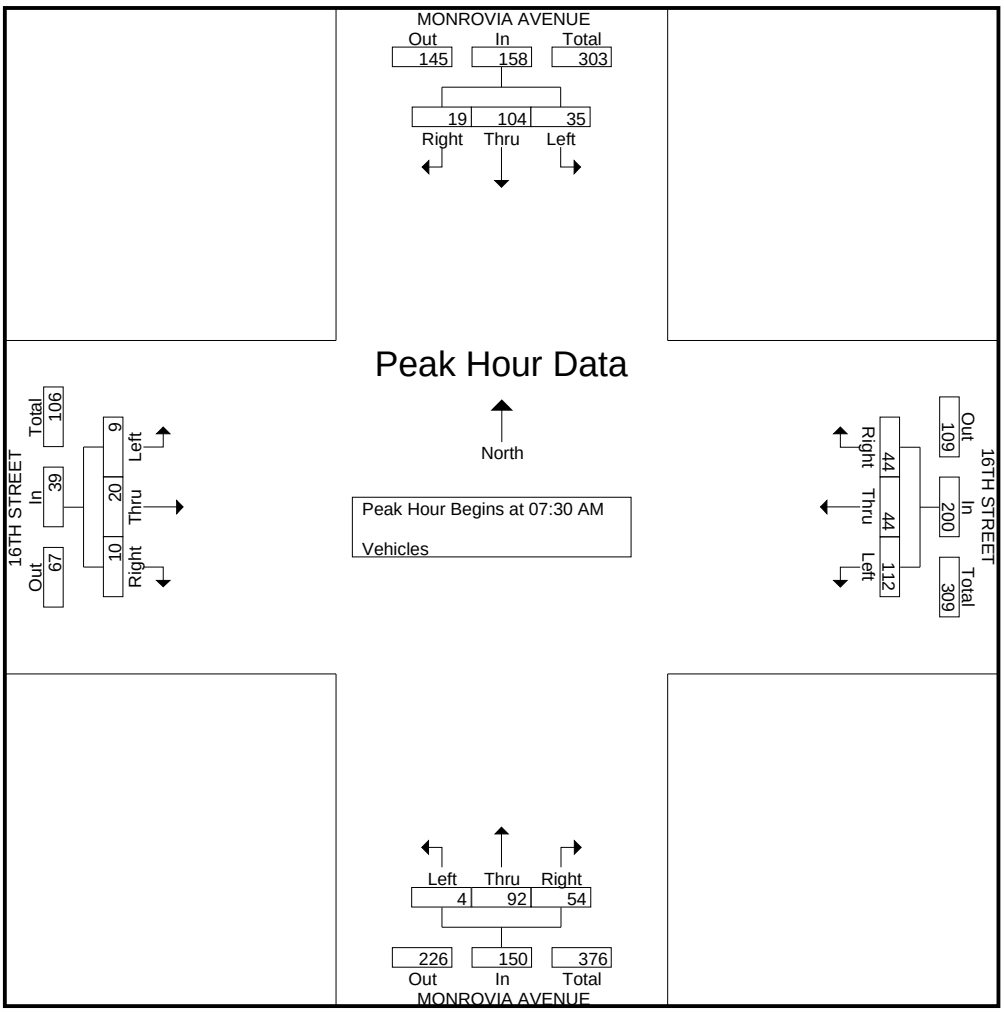

Transportation Studies, Inc.

2860 Walnut Avenue, Suite C
Tustin, CA. 92780

File Name : H0905012
Site Code : 00000979
Start Date : 5/5/2009
Page No : 3

	MONROVIA AVENUE Southbound				16TH STREET Westbound				MONROVIA AVENUE Northbound				16TH STREET Eastbound				
Start Time	Right	Thru	Left	App. Total	Right	Thru	Left	App. Total	Right	Thru	Left	App. Total	Right	Thru	Left	App. Total	Int. Total
Peak Hour Analysis From 04:30 PM to 06:15 PM - Peak 1 of 1																	
Peak Hour for Entire Intersection Begins at 04:30 PM																	
04:30 PM	3	**32**	3	38	10	3	5	18	6	**25**	3	**34**	**11**	**27**	**15**	**53**	**143**
04:45 PM	**8**	22	**11**	**41**	**12**	8	2	**22**	**7**	12	**4**	23	4	15	6	25	111
05:00 PM	2	17	7	26	6	**9**	5	20	5	15	1	21	3	17	9	29	96
05:15 PM	4	24	8	36	3	3	**6**	12	5	21	0	26	3	11	7	21	95
Total Volume	17	95	29	141	31	23	18	72	23	73	8	104	21	70	37	128	445
% App. Total	12.1	67.4	20.6		43.1	31.9	25		22.1	70.2	7.7		16.4	54.7	28.9		
PHF	.531	.742	.659	.860	.646	.639	.750	.818	.821	.730	.500	.765	.477	.648	.617	.604	.778

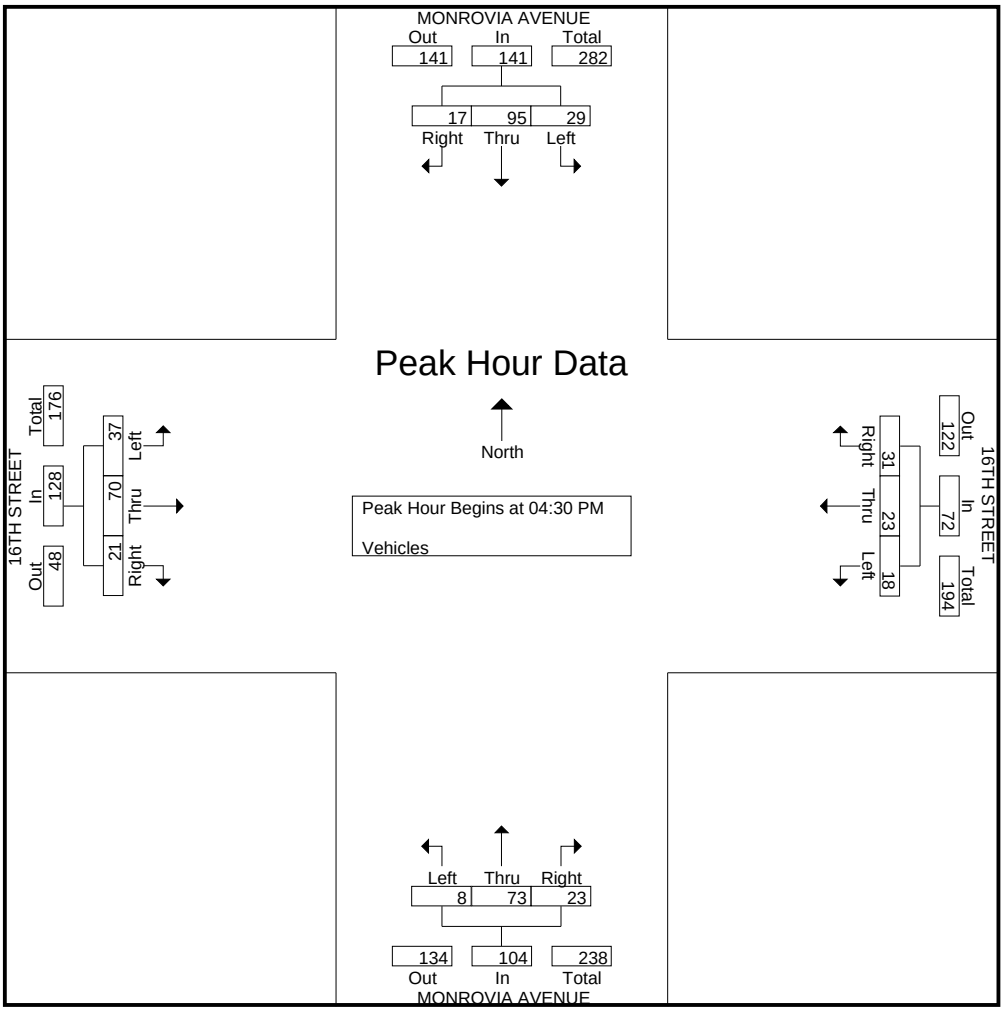

Transportation Studies, Inc.

2860 Walnut Avenue, Suite C
Tustin, CA. 92780

City: NEWPORT BEACH
N-S Direction: PLACENTIA AVENUE
E-W Direction: 15TH STREET

File Name : H0904001
Site Code : 00000000
Start Date : 4/2/2009
Page No : 1

Groups Printed- VEHICLES

	PLACENTIA AVENUE Southbound			15TH STREET Westbound			PLACENTIA AVENUE Northbound			15TH STREET Eastbound			
Start Time	Right	Thru	Left	Right	Thru	Left	Right	Thru	Left	Right	Thru	Left	Int. Total
Factor	1.0	1.0	1.0	1.0	1.0	1.0	1.0	1.0	1.0	1.0	1.0	1.0	
07:00 AM	1	61	5	9	3	0	2	63	7	12	10	13	186
07:15 AM	2	90	12	13	4	0	4	60	14	24	10	11	244
07:30 AM	4	122	5	15	6	0	5	101	28	49	19	12	366
07:45 AM	9	123	7	18	6	0	0	114	51	50	12	16	406
Total	16	396	29	55	19	0	11	338	100	135	51	52	1202
08:00 AM	4	92	4	21	7	0	6	123	29	37	11	17	351
08:15 AM	2	94	9	21	3	4	4	87	23	38	9	12	306
08:30 AM	6	100	9	25	3	1	3	107	15	28	10	17	324
08:45 AM	3	95	10	24	7	0	4	89	19	24	13	10	298
Total	15	381	32	91	20	5	17	406	86	127	43	56	1279
*** BREAK ***													
04:30 PM	6	105	4	21	14	1	7	109	15	45	6	7	340
04:45 PM	6	81	8	20	12	4	3	98	18	38	9	2	299
Total	12	186	12	41	26	5	10	207	33	83	15	9	639
05:00 PM	8	99	1	25	12	3	3	118	18	23	3	11	324
05:15 PM	10	109	1	18	10	2	4	115	20	26	5	7	327
05:30 PM	7	94	2	20	13	5	5	104	19	22	6	13	310
05:45 PM	12	87	3	16	20	1	3	85	26	26	8	6	293
Total	37	389	7	79	55	11	15	422	83	97	22	37	1254
06:00 PM	11	74	2	15	6	1	5	73	14	19	3	10	233
06:15 PM	7	79	4	21	20	1	3	57	17	14	7	8	238
Grand Total	98	1505	86	302	146	23	61	1503	333	475	141	172	4845
Apprch %	5.8	89.1	5.1	64.1	31	4.9	3.2	79.2	17.6	60.3	17.9	21.8	
Total %	2	31.1	1.8	6.2	3	0.5	1.3	31	6.9	9.8	2.9	3.6	

Transportation Studies, Inc.

2860 Walnut Avenue, Suite C
Tustin, CA. 92780

File Name : H0904001
Site Code : 00000000
Start Date : 4/2/2009
Page No : 2

	PLACENTIA AVENUE Southbound				15TH STREET Westbound				PLACENTIA AVENUE Northbound				15TH STREET Eastbound				
Start Time	Right	Thru	Left	App. Total	Right	Thru	Left	App. Total	Right	Thru	Left	App. Total	Right	Thru	Left	App. Total	Int. Total
Peak Hour Analysis From 07:00 AM to 08:45 AM - Peak 1 of 1																	
Peak Hour for Entire Intersection Begins at 07:30 AM																	
07:30 AM	4	122	5	131	15	6	0	21	5	101	28	134	49	**19**	12	**80**	366
07:45 AM	**9**	**123**	7	**139**	18	6	0	24	0	114	**51**	**165**	**50**	12	16	78	**406**
08:00 AM	4	92	4	100	**21**	**7**	0	**28**	**6**	**123**	29	158	37	11	**17**	65	351
08:15 AM	2	94	**9**	105	21	3	**4**	28	4	87	23	114	38	9	12	59	306
Total Volume	19	431	25	475	75	22	4	101	15	425	131	571	174	51	57	282	1429
% App. Total	4	90.7	5.3		74.3	21.8	4		2.6	74.4	22.9		61.7	18.1	20.2		
PHF	.528	.876	.694	.854	.893	.786	.250	.902	.625	.864	.642	.865	.870	.671	.838	.881	.880

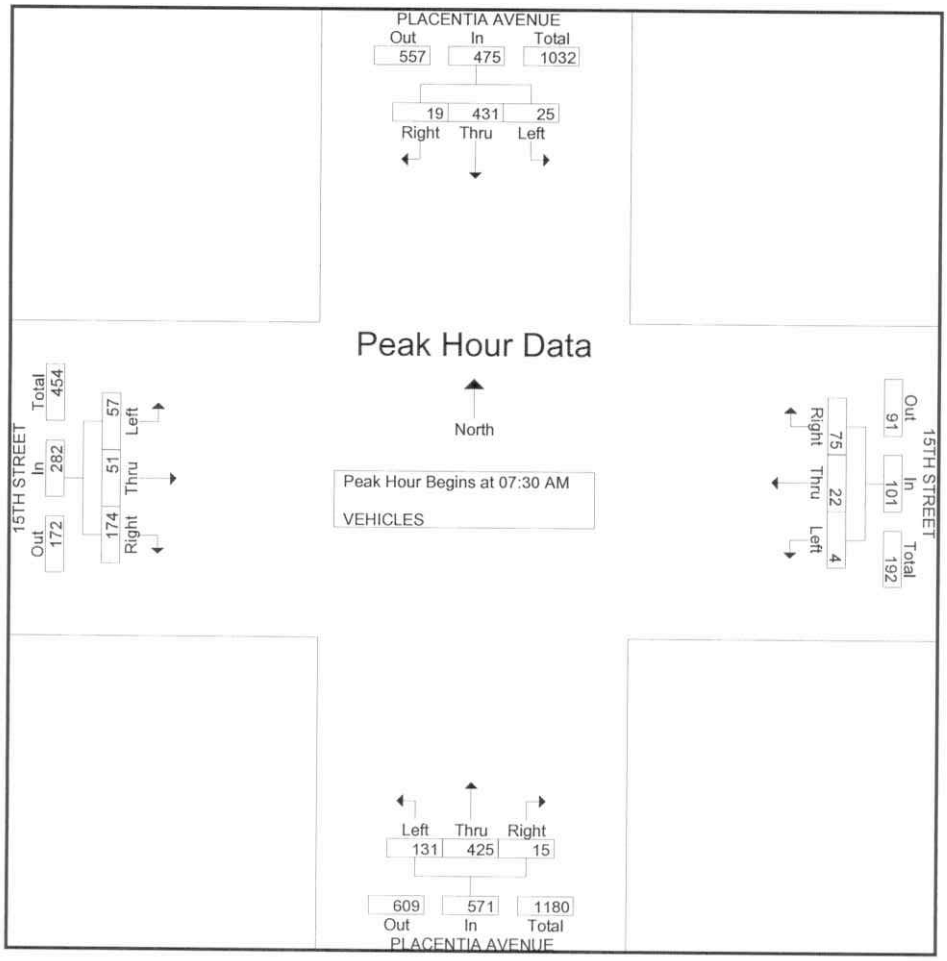

Transportation Studies, Inc.

2860 Walnut Avenue, Suite C
Tustin, CA. 92780

File Name : H0904001
Site Code : 00000000
Start Date : 4/2/2009
Page No : 3

	PLACENTIA AVENUE Southbound				15TH STREET Westbound				PLACENTIA AVENUE Northbound				15TH STREET Eastbound				
Start Time	Right	Thru	Left	App. Total	Right	Thru	Left	App. Total	Right	Thru	Left	App. Total	Right	Thru	Left	App. Total	Int. Total
Peak Hour Analysis From 04:30 PM to 06:15 PM - Peak 1 of 1																	
Peak Hour for Entire Intersection Begins at 04:30 PM																	
04:30 PM	6	105	4	115	21	**14**	1	36	**7**	109	15	131	**45**	6	7	**58**	**340**
04:45 PM	6	81	**8**	95	20	12	**4**	36	3	98	18	119	38	**9**	2	49	299
05:00 PM	8	99	1	108	**25**	12	3	**40**	3	**118**	18	**139**	23	3	**11**	37	324
05:15 PM	**10**	**109**	1	**120**	18	10	2	30	4	115	**20**	139	26	5	7	38	327
Total Volume	30	394	14	438	84	48	10	142	17	440	71	528	132	23	27	182	1290
% App. Total	6.8	90	3.2		59.2	33.8	7		3.2	83.3	13.4		72.5	12.6	14.8		
PHF	.750	.904	.438	.913	.840	.857	.625	.888	.607	.932	.888	.950	.733	.639	.614	.784	.949

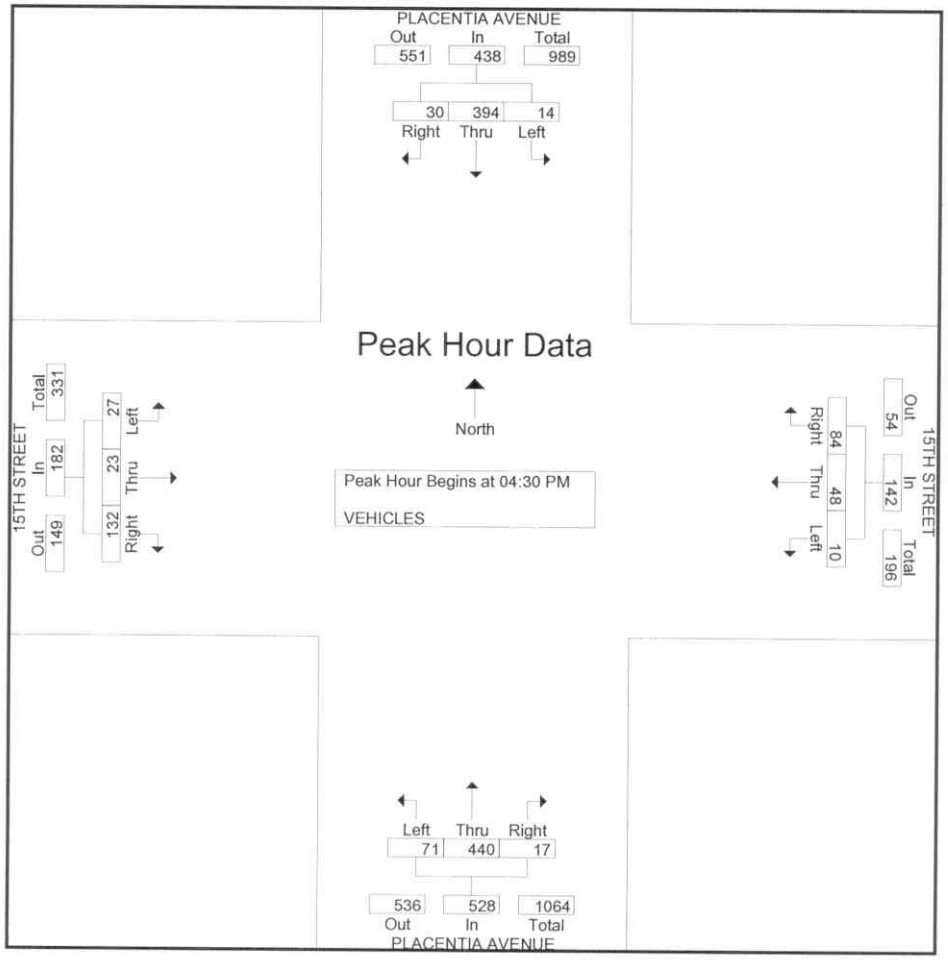

Transportation Studies, Inc.

2860 Walnut Avenue, Suite C
Tustin, CA. 92780

File Name : H0904002
Site Code : 00000000
Start Date : 3/31/2009
Page No : 2

	SUPERIOR AVENUE Southbound				15TH STREET Westbound				SUPERIOR AVENUE Northbound				15TH STREET Eastbound				
Start Time	Right	Thru	Left	App. Total	Right	Thru	Left	App. Total	Right	Thru	Left	App. Total	Right	Thru	Left	App. Total	Int. Total
Peak Hour Analysis From 07:00 AM to 08:45 AM - Peak 1 of 1																	
Peak Hour for Entire Intersection Begins at 08:00 AM																	
08:00 AM	**18**	64	0	82	0	0	0	0	0	**225**	21	**246**	2	0	9	11	339
08:15 AM	11	**90**	0	101	0	0	0	0	0	189	16	205	6	0	13	19	325
08:30 AM	12	85	0	97	0	0	0	0	0	200	18	218	4	0	18	22	337
08:45 AM	18	89	0	**107**	0	0	0	0	0	185	**22**	207	**9**	0	**24**	**33**	**347**
Total Volume	59	328	0	387	0	0	0	0	0	799	77	876	21	0	64	85	1348
% App. Total	15.2	84.8	0		0	0	0		0	91.2	8.8		24.7	0	75.3		
PHF	.819	.911	.000	.904	.000	.000	.000	.000	.000	.888	.875	.890	.583	.000	.667	.644	.971

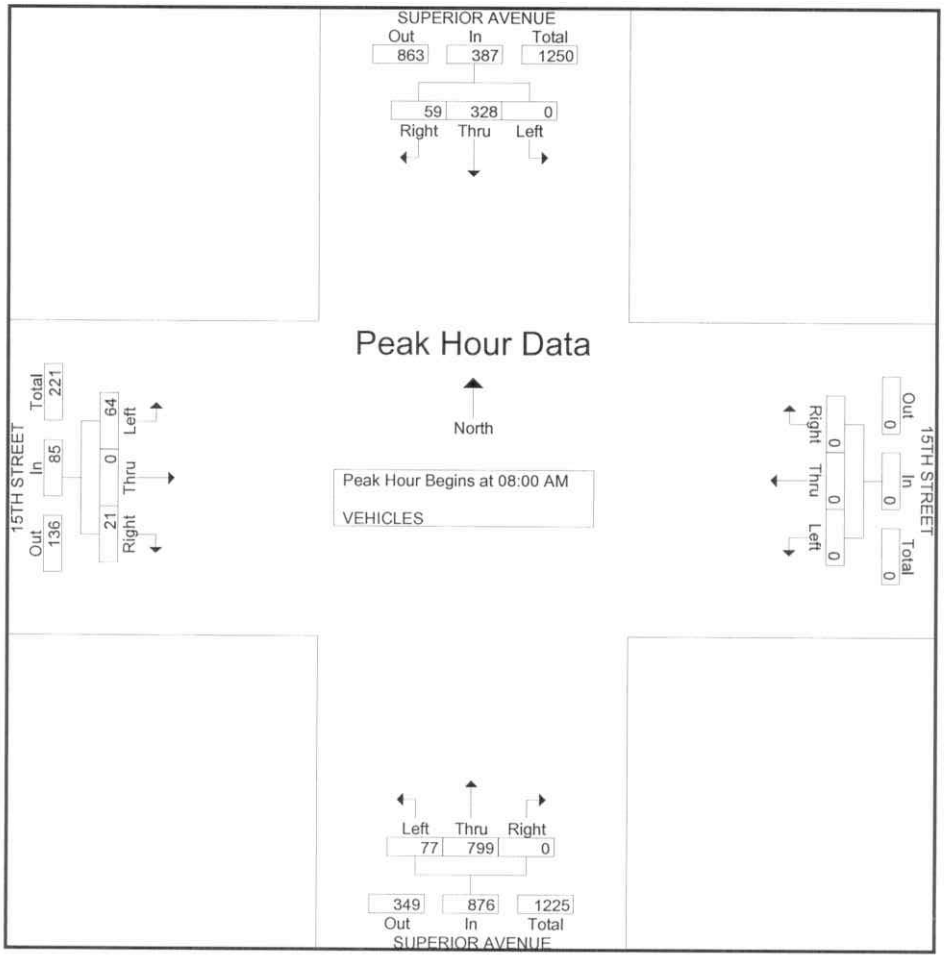

Transportation Studies, Inc.

2860 Walnut Avenue, Suite C
Tustin, CA. 92780

File Name : H0904002
Site Code : 00000000
Start Date : 3/31/2009
Page No : 3

	SUPERIOR AVENUE Southbound				15TH STREET Westbound				SUPERIOR AVENUE Northbound				15TH STREET Eastbound				
Start Time	Right	Thru	Left	App. Total	Right	Thru	Left	App. Total	Right	Thru	Left	App. Total	Right	Thru	Left	App. Total	Int. Total
Peak Hour Analysis From 04:30 PM to 06:15 PM - Peak 1 of 1																	
Peak Hour for Entire Intersection Begins at 04:30 PM																	
04:30 PM	25	185	0	210	0	0	0	0	0	153	**12**	165	6	0	6	12	387
04:45 PM	17	197	0	214	0	0	0	0	0	128	8	136	6	0	7	13	363
05:00 PM	16	201	0	217	0	0	0	0	0	**170**	9	**179**	2	0	9	11	407
05:15 PM	**34**	**203**	0	**237**	0	0	0	0	0	142	6	148	**10**	0	**13**	**23**	**408**
Total Volume	92	786	0	878	0	0	0	0	0	593	35	628	24	0	35	59	1565
% App. Total	10.5	89.5	0		0	0	0		0	94.4	5.6		40.7	0	59.3		
PHF	.676	.968	.000	.926	.000	.000	.000	.000	.000	.872	.729	.877	.600	.000	.673	.641	.959

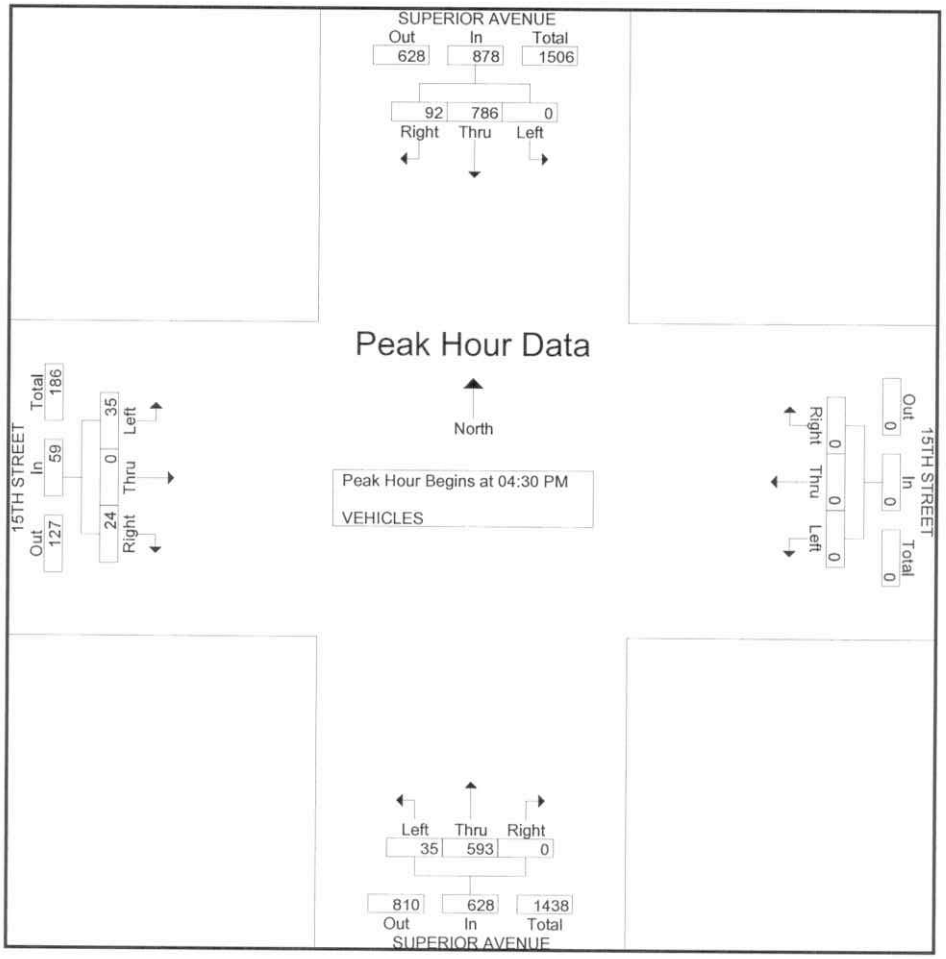

Transportation Studies, Inc.

2860 Walnut Avenue, Suite C
Tustin, CA. 92780

City: NEWPORT BEACH
N-S Direction: SUPERIOR AVENUE
E-W Direction: PLACENTIA AVENUE

File Name : H0902159
Site Code : 00000000
Start Date : 2/12/2009
Page No : 1

Groups Printed- VEHICLES

	SUPERIOR AVENUE Southbound			PLACENTIA AVENUE Westbound			SUPERIOR AVENUE Northbound			PLACENTIA AVENUE Eastbound			
Start Time	Right	Thru	Left	Right	Thru	Left	Right	Thru	Left	Right	Thru	Left	Int. Total
Factor	1.0	1.0	1.0	1.0	1.0	1.0	1.0	1.0	1.0	1.0	1.0	1.0	
07:00 AM	1	55	8	6	23	2	4	141	43	59	36	4	382
07:15 AM	0	40	7	5	34	1	4	160	56	50	44	2	403
07:30 AM	1	67	15	19	53	3	6	197	60	49	82	3	555
07:45 AM	3	61	9	11	62	2	12	197	110	77	104	8	656
Total	5	223	39	41	172	8	26	695	269	235	266	17	1996
08:00 AM	4	57	16	9	69	0	6	183	90	75	65	2	576
08:15 AM	1	58	17	22	43	3	9	226	86	67	74	5	611
08:30 AM	2	67	12	11	33	6	12	193	81	64	59	3	543
08:45 AM	1	58	16	8	35	3	11	200	102	53	67	1	555
Total	8	240	61	50	180	12	38	802	359	259	265	11	2285
*** BREAK ***													
04:30 PM	2	181	14	26	65	13	4	98	61	80	38	3	585
04:45 PM	3	144	14	14	65	8	7	104	55	94	41	4	553
Total	5	325	28	40	130	21	11	202	116	174	79	7	1138
05:00 PM	2	181	17	27	98	8	5	113	54	75	51	1	632
05:15 PM	4	158	12	19	59	12	6	104	54	67	36	3	534
05:30 PM	1	175	4	22	64	9	4	117	57	79	44	2	578
05:45 PM	2	161	5	10	40	12	3	107	55	77	34	0	506
Total	9	675	38	78	261	41	18	441	220	298	165	6	2250
06:00 PM	0	171	9	11	37	9	2	102	33	59	32	1	466
06:15 PM	1	158	6	12	34	10	2	96	37	64	28	1	449
Grand Total	28	1792	181	232	814	101	97	2338	1034	1089	835	43	8584
Apprch %	1.4	89.6	9	20.2	71	8.8	2.8	67.4	29.8	55.4	42.5	2.2	
Total %	0.3	20.9	2.1	2.7	9.5	1.2	1.1	27.2	12	12.7	9.7	0.5	

Transportation Studies, Inc.

2860 Walnut Avenue, Suite C
Tustin, CA. 92780

File Name : H0902159
Site Code : 00000000
Start Date : 2/12/2009
Page No : 2

	SUPERIOR AVENUE Southbound				PLACENTIA AVENUE Westbound				SUPERIOR AVENUE Northbound				PLACENTIA AVENUE Eastbound				
Start Time	Right	Thru	Left	App. Total	Right	Thru	Left	App. Total	Right	Thru	Left	App. Total	Right	Thru	Left	App. Total	Int. Total
Peak Hour Analysis From 07:00 AM to 08:45 AM - Peak 1 of 1																	
Peak Hour for Entire Intersection Begins at 07:30 AM																	
07:30 AM	1	**67**	15	**83**	19	53	**3**	75	6	197	60	263	49	82	3	134	555
07:45 AM	3	61	9	73	11	62	2	75	**12**	197	**110**	319	**77**	**104**	**8**	**189**	**656**
08:00 AM	**4**	57	16	77	9	**69**	0	**78**	6	183	90	279	75	65	2	142	576
08:15 AM	1	58	**17**	76	**22**	43	3	68	9	**226**	86	**321**	67	74	5	146	611
Total Volume	9	243	57	309	61	227	8	296	33	803	346	1182	268	325	18	611	2398
% App. Total	2.9	78.6	18.4		20.6	76.7	2.7		2.8	67.9	29.3		43.9	53.2	2.9		
PHF	.563	.907	.838	.931	.693	.822	.667	.949	.688	.888	.786	.921	.870	.781	.563	.808	.914

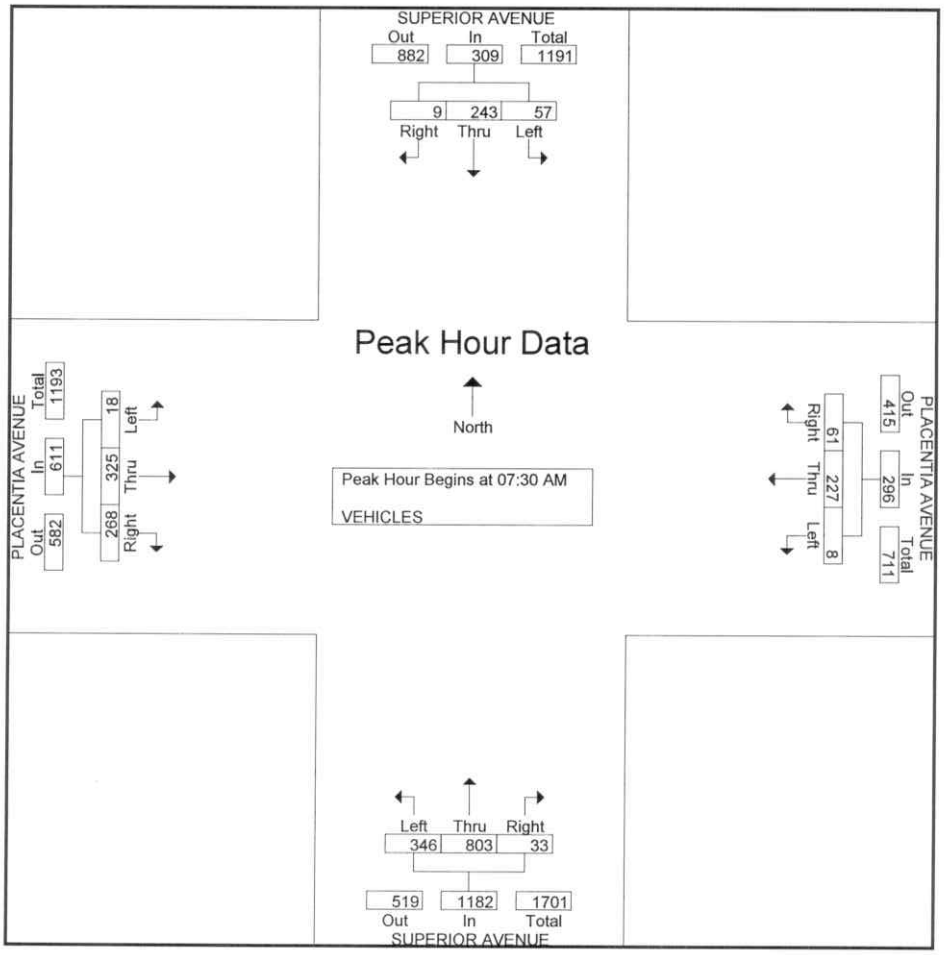

Transportation Studies, Inc.

2860 Walnut Avenue, Suite C
Tustin, CA. 92780

File Name : H0902159
Site Code : 00000000
Start Date : 2/12/2009
Page No : 3

	SUPERIOR AVENUE Southbound				PLACENTIA AVENUE Westbound				SUPERIOR AVENUE Northbound				PLACENTIA AVENUE Eastbound				
Start Time	Right	Thru	Left	App. Total	Right	Thru	Left	App. Total	Right	Thru	Left	App. Total	Right	Thru	Left	App. Total	Int. Total
Peak Hour Analysis From 04:30 PM to 06:15 PM - Peak 1 of 1																	
Peak Hour for Entire Intersection Begins at 04:30 PM																	
04:30 PM	2	**181**	14	197	26	65	**13**	104	4	98	**61**	163	80	38	3	121	585
04:45 PM	3	144	14	161	14	65	8	87	**7**	104	55	166	**94**	41	**4**	**139**	553
05:00 PM	2	181	**17**	**200**	**27**	**98**	8	**133**	5	**113**	54	**172**	75	**51**	1	127	**632**
05:15 PM	**4**	158	12	174	19	59	12	90	6	104	54	164	67	36	3	106	534
Total Volume	11	664	57	732	86	287	41	414	22	419	224	665	316	166	11	493	2304
% App. Total	1.5	90.7	7.8		20.8	69.3	9.9		3.3	63	33.7		64.1	33.7	2.2		
PHF	.688	.917	.838	.915	.796	.732	.788	.778	.786	.927	.918	.967	.840	.814	.688	.887	.911

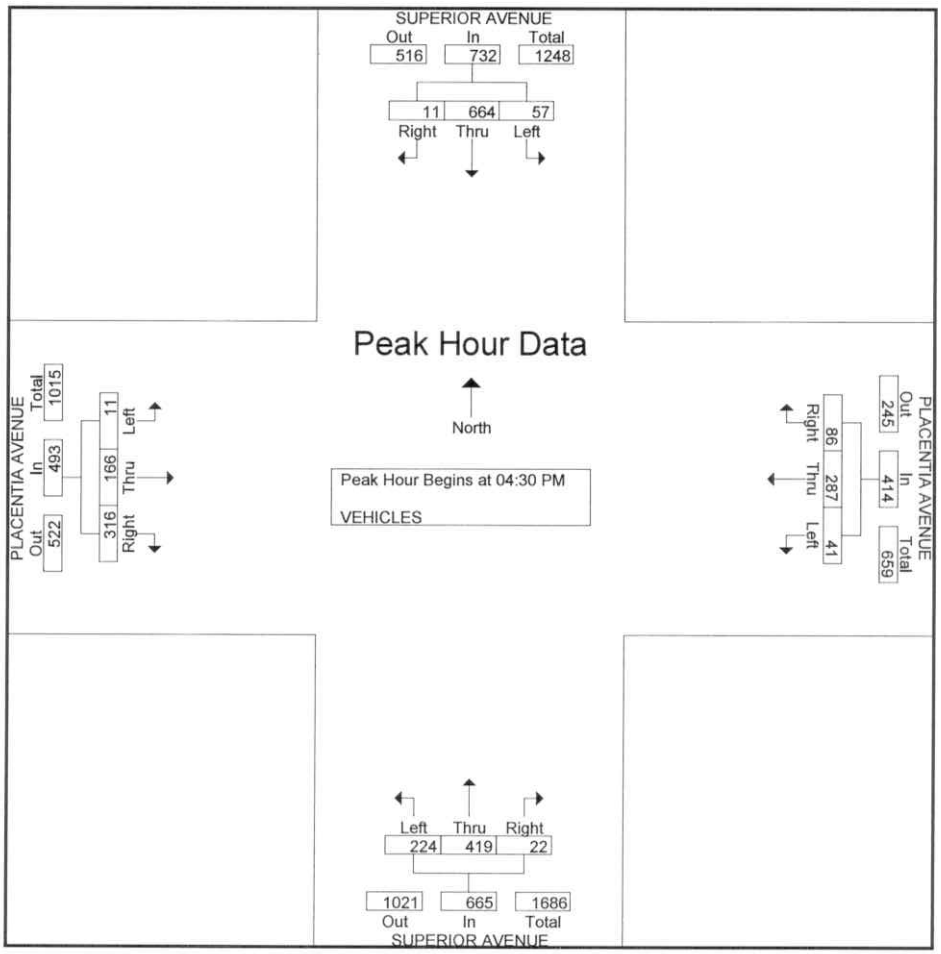

Transportation Studies, Inc.

2860 Walnut Avenue, Suite C
Tustin, CA. 92780

City: NEWPORT BEACH
N-S Direction: NEWPORT BOULEVARD
E-W Direction: HOSPITAL ROAD

File Name : H0904003
Site Code : 00000000
Start Date : 4/1/2009
Page No : 1

Groups Printed- VEHICLES

	NEWPORT BOULEVARD Southbound			HOSPITAL ROAD Westbound			NEWPORT BOULEVARD Northbound			HOSPITAL ROAD Eastbound			
Start Time	Right	Thru	Left	Right	Thru	Left	Right	Thru	Left	Right	Thru	Left	Int. Total
Factor	1.0	1.0	1.0	1.0	1.0	1.0	1.0	1.0	1.0	1.0	1.0	1.0	
07:00 AM	67	229	8	4	21	6	8	264	6	34	8	33	688
07:15 AM	70	208	2	3	31	11	12	316	16	35	14	30	748
07:30 AM	73	234	9	18	49	13	13	393	31	49	36	73	991
07:45 AM	98	263	6	4	53	16	14	310	37	57	49	52	959
Total	308	934	25	29	154	46	47	1283	90	175	107	188	3386
08:00 AM	77	256	13	6	71	9	17	344	39	60	26	59	977
08:15 AM	97	265	12	12	48	12	30	362	21	41	34	51	985
08:30 AM	99	267	17	5	59	23	20	340	31	54	34	40	989
08:45 AM	95	278	14	5	46	21	29	327	38	44	30	47	974
Total	368	1066	56	28	224	65	96	1373	129	199	124	197	3925
*** BREAK ***													
04:30 PM	54	385	8	9	39	21	19	324	34	53	35	79	1060
04:45 PM	41	395	10	10	43	30	13	308	23	41	38	68	1020
Total	95	780	18	19	82	51	32	632	57	94	73	147	2080
05:00 PM	60	350	12	11	44	40	13	303	33	48	32	76	1022
05:15 PM	50	383	18	8	52	30	10	280	27	45	30	70	1003
05:30 PM	66	360	13	10	42	27	12	269	27	42	20	72	960
05:45 PM	59	400	6	7	46	35	14	257	30	45	25	45	969
Total	235	1493	49	36	184	132	49	1109	117	180	107	263	3954
06:00 PM	79	379	8	9	38	21	15	283	31	35	27	58	983
06:15 PM	80	413	6	6	26	28	15	275	23	43	14	36	965
Grand Total	1165	5065	162	127	708	343	254	4955	447	726	452	889	15293
Apprch %	18.2	79.2	2.5	10.8	60.1	29.1	4.5	87.6	7.9	35.1	21.9	43	
Total %	7.6	33.1	1.1	0.8	4.6	2.2	1.7	32.4	2.9	4.7	3	5.8	

Transportation Studies, Inc.

2860 Walnut Avenue, Suite C
Tustin, CA. 92780

File Name : H0904003
Site Code : 00000000
Start Date : 4/1/2009
Page No : 2

	NEWPORT BOULEVARD Southbound				HOSPITAL ROAD Westbound				NEWPORT BOULEVARD Northbound				HOSPITAL ROAD Eastbound				
Start Time	Right	Thru	Left	App. Total	Right	Thru	Left	App. Total	Right	Thru	Left	App. Total	Right	Thru	Left	App. Total	Int. Total
Peak Hour Analysis From 07:00 AM to 08:45 AM - Peak 1 of 1																	
Peak Hour for Entire Intersection Begins at 08:00 AM																	
08:00 AM	77	256	13	346	6	**71**	9	86	17	344	**39**	400	**60**	26	**59**	**145**	977
08:15 AM	97	265	12	374	**12**	48	12	72	**30**	**362**	21	**413**	41	**34**	51	126	985
08:30 AM	**99**	267	**17**	383	5	59	**23**	**87**	20	340	31	391	54	34	40	128	**989**
08:45 AM	95	**278**	14	**387**	5	46	21	72	29	327	38	394	44	30	47	121	974
Total Volume	368	1066	56	1490	28	224	65	317	96	1373	129	1598	199	124	197	520	3925
% App. Total	24.7	71.5	3.8		8.8	70.7	20.5		6	85.9	8.1		38.3	23.8	37.9		
PHF	.929	.959	.824	.963	.583	.789	.707	.911	.800	.948	.827	.967	.829	.912	.835	.897	.992

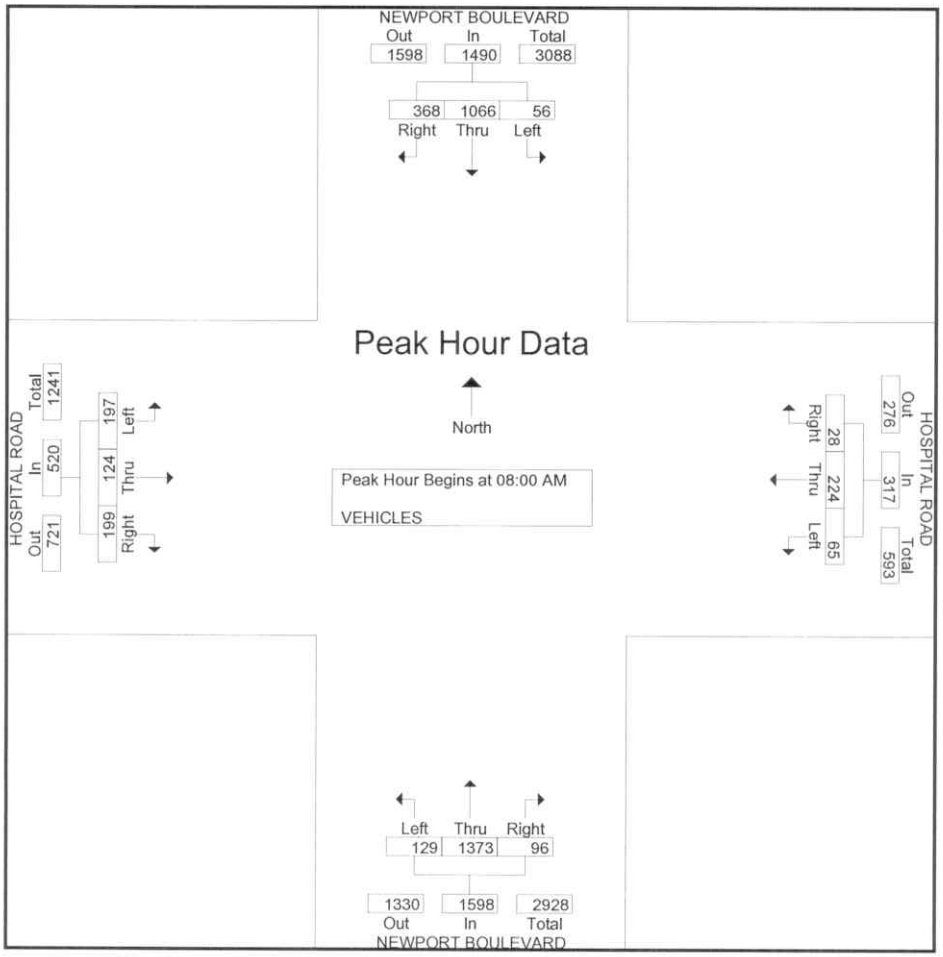

Transportation Studies, Inc.

2860 Walnut Avenue, Suite C
Tustin, CA. 92780

File Name : H0904003
Site Code : 00000000
Start Date : 4/1/2009
Page No : 3

	NEWPORT BOULEVARD Southbound				HOSPITAL ROAD Westbound				NEWPORT BOULEVARD Northbound				HOSPITAL ROAD Eastbound				
Start Time	Right	Thru	Left	App. Total	Right	Thru	Left	App. Total	Right	Thru	Left	App. Total	Right	Thru	Left	App. Total	Int. Total
Peak Hour Analysis From 04:30 PM to 06:15 PM - Peak 1 of 1																	
Peak Hour for Entire Intersection Begins at 04:30 PM																	
04:30 PM	54	385	8	447	9	39	21	69	**19**	**324**	**34**	**377**	**53**	35	**79**	**167**	**1060**
04:45 PM	41	**395**	10	446	10	43	30	83	13	308	23	344	41	**38**	68	147	1020
05:00 PM	**60**	350	12	422	**11**	44	**40**	**95**	13	303	33	349	48	32	76	156	1022
05:15 PM	50	383	**18**	**451**	8	**52**	30	90	10	280	27	317	45	30	70	145	1003
Total Volume	205	1513	48	1766	38	178	121	337	55	1215	117	1387	187	135	293	615	4105
% App. Total	11.6	85.7	2.7		11.3	52.8	35.9		4	87.6	8.4		30.4	22	47.6		
PHF	.854	.958	.667	.979	.864	.856	.756	.887	.724	.938	.860	.920	.882	.888	.927	.921	.968

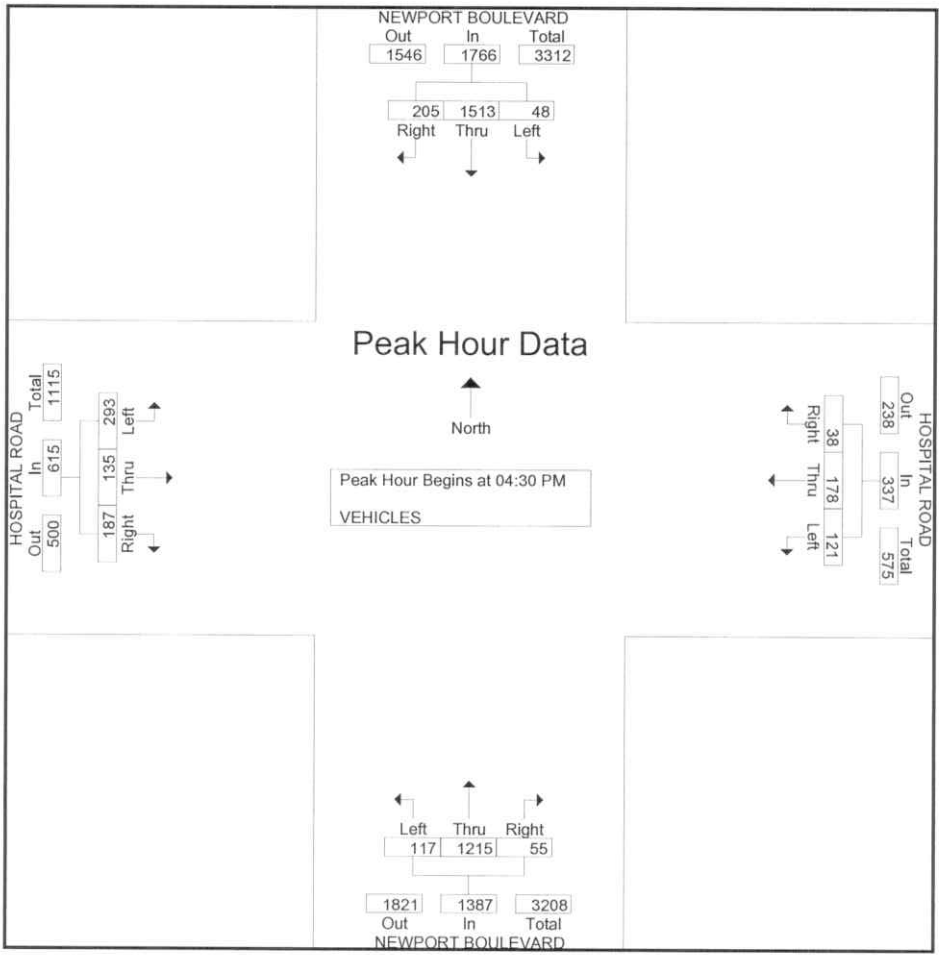

Transportation Studies, Inc.

2860 Walnut Avenue, Suite C
Tustin, CA. 92780

City: NEWPORT BEACH
N-S Direction: ORANGE STREET
E-W Direction: COAST HIGHWAY

File Name : H0903063
Site Code : 00000000
Start Date : 3/19/2009
Page No : 1

Groups Printed- VEHICLES

	ORANGE STREET Southbound			COAST HIGHWAY Westbound			ORANGE STREET Northbound			COAST HIGHWAY Eastbound			
Start Time	Right	Thru	Left	Right	Thru	Left	Right	Thru	Left	Right	Thru	Left	Int. Total
Factor	1.0	1.0	1.0	1.0	1.0	1.0	1.0	1.0	1.0	1.0	1.0	1.0	
07:00 AM	3	0	4	1	136	6	8	1	1	5	393	1	559
07:15 AM	4	0	3	1	147	8	12	0	1	6	456	1	639
07:30 AM	5	0	5	3	156	8	12	4	3	8	585	2	791
07:45 AM	2	0	6	4	136	7	11	2	3	7	642	1	821
Total	14	0	18	9	575	29	43	7	8	26	2076	5	2810
08:00 AM	8	0	11	7	201	11	13	1	5	1	688	1	947
08:15 AM	7	0	9	1	222	15	30	0	17	4	729	1	1035
08:30 AM	3	2	10	5	205	13	15	0	12	2	808	2	1077
08:45 AM	1	0	10	4	242	4	12	0	15	3	870	7	1168
Total	19	2	40	17	870	43	70	1	49	10	3095	11	4227
*** BREAK ***													
04:30 PM	2	0	10	2	532	21	16	0	9	4	241	4	841
04:45 PM	7	0	7	4	632	10	5	1	16	0	332	8	1022
Total	9	0	17	6	1164	31	21	1	25	4	573	12	1863
05:00 PM	3	0	6	8	673	19	4	4	8	9	245	7	986
05:15 PM	3	2	7	6	730	12	15	2	7	3	331	15	1133
05:30 PM	5	0	12	8	753	12	5	1	6	7	262	14	1085
05:45 PM	6	1	3	6	685	11	4	0	5	7	259	10	997
Total	17	3	28	28	2841	54	28	7	26	26	1097	46	4201
06:00 PM	4	0	4	9	546	6	10	4	4	7	388	8	990
06:15 PM	5	0	5	11	551	14	10	1	2	8	290	9	906
Grand Total	68	5	112	80	6547	177	182	21	114	81	7519	91	14997
Apprch %	36.8	2.7	60.5	1.2	96.2	2.6	57.4	6.6	36	1.1	97.8	1.2	
Total %	0.5	0	0.7	0.5	43.7	1.2	1.2	0.1	0.8	0.5	50.1	0.6	

Transportation Studies, Inc.

2860 Walnut Avenue, Suite C
Tustin, CA. 92780

File Name : H0903063
Site Code : 00000000
Start Date : 3/19/2009
Page No : 2

	ORANGE STREET Southbound				COAST HIGHWAY Westbound				ORANGE STREET Northbound				COAST HIGHWAY Eastbound				
Start Time	Right	Thru	Left	App. Total	Right	Thru	Left	App. Total	Right	Thru	Left	App. Total	Right	Thru	Left	App. Total	Int. Total
Peak Hour Analysis From 07:00 AM to 08:45 AM - Peak 1 of 1																	
Peak Hour for Entire Intersection Begins at 08:00 AM																	
08:00 AM	**8**	0	**11**	**19**	**7**	201	11	219	13	**1**	5	19	1	688	1	690	947
08:15 AM	7	0	9	16	1	222	**15**	238	**30**	0	**17**	**47**	**4**	729	1	734	1035
08:30 AM	3	**2**	10	15	5	205	13	223	15	0	12	27	2	808	2	812	1077
08:45 AM	1	0	10	11	4	**242**	4	**250**	12	0	15	27	3	**870**	**7**	**880**	**1168**
Total Volume	19	2	40	61	17	870	43	930	70	1	49	120	10	3095	11	3116	4227
% App. Total	31.1	3.3	65.6		1.8	93.5	4.6		58.3	0.8	40.8		0.3	99.3	0.4		
PHF	.594	.250	.909	.803	.607	.899	.717	.930	.583	.250	.721	.638	.625	.889	.393	.885	.905

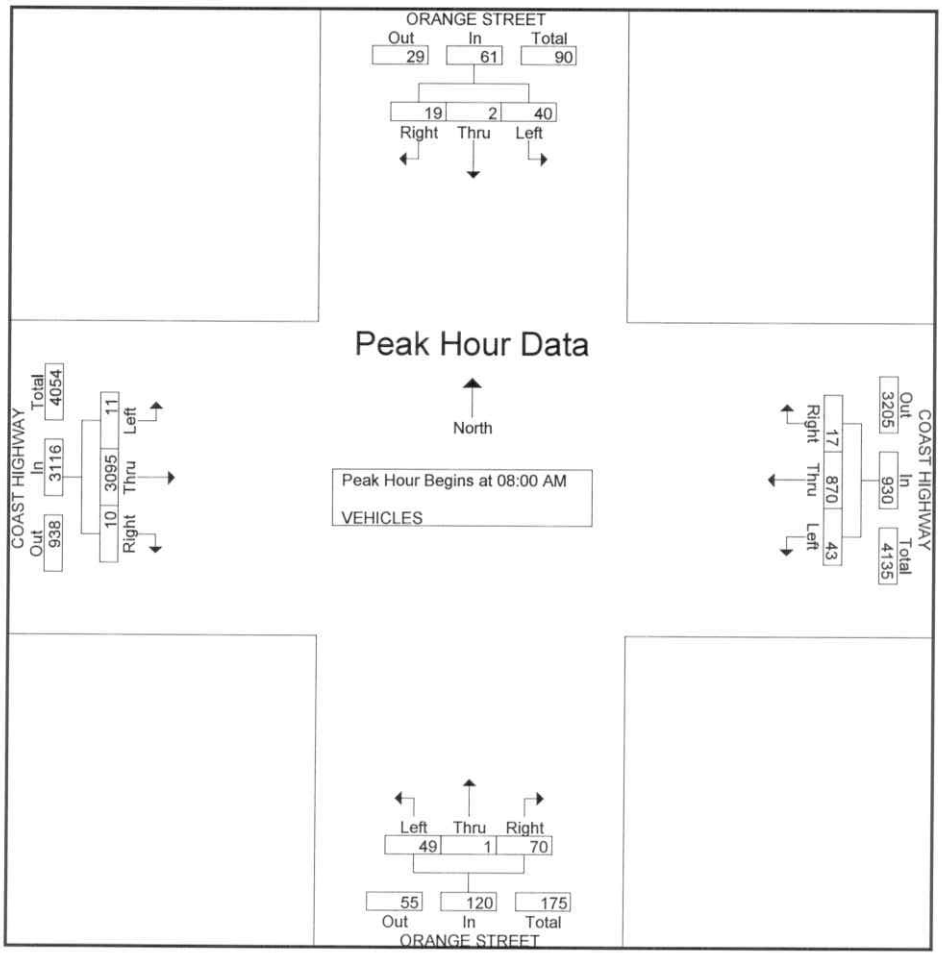

Transportation Studies, Inc.

2860 Walnut Avenue, Suite C
Tustin, CA. 92780

File Name : H0903063
Site Code : 00000000
Start Date : 3/19/2009
Page No : 3

	ORANGE STREET Southbound				COAST HIGHWAY Westbound				ORANGE STREET Northbound				COAST HIGHWAY Eastbound				
Start Time	Right	Thru	Left	App. Total	Right	Thru	Left	App. Total	Right	Thru	Left	App. Total	Right	Thru	Left	App. Total	Int. Total
Peak Hour Analysis From 04:30 PM to 06:15 PM - Peak 1 of 1																	
Peak Hour for Entire Intersection Begins at 04:45 PM																	
04:45 PM	**7**	0	7	14	4	632	10	646	5	1	**16**	22	0	**332**	8	340	1022
05:00 PM	3	0	6	9	**8**	673	**19**	700	4	**4**	8	16	**9**	245	7	261	986
05:15 PM	3	**2**	7	12	6	730	12	748	**15**	2	7	**24**	3	331	**15**	**349**	**1133**
05:30 PM	5	0	**12**	**17**	8	**753**	12	**773**	5	1	6	12	7	262	14	283	1085
Total Volume	18	2	32	52	26	2788	53	2867	29	8	37	74	19	1170	44	1233	4226
% App. Total	34.6	3.8	61.5		0.9	97.2	1.8		39.2	10.8	50		1.5	94.9	3.6		
PHF	.643	.250	.667	.765	.813	.926	.697	.927	.483	.500	.578	.771	.528	.881	.733	.883	.932

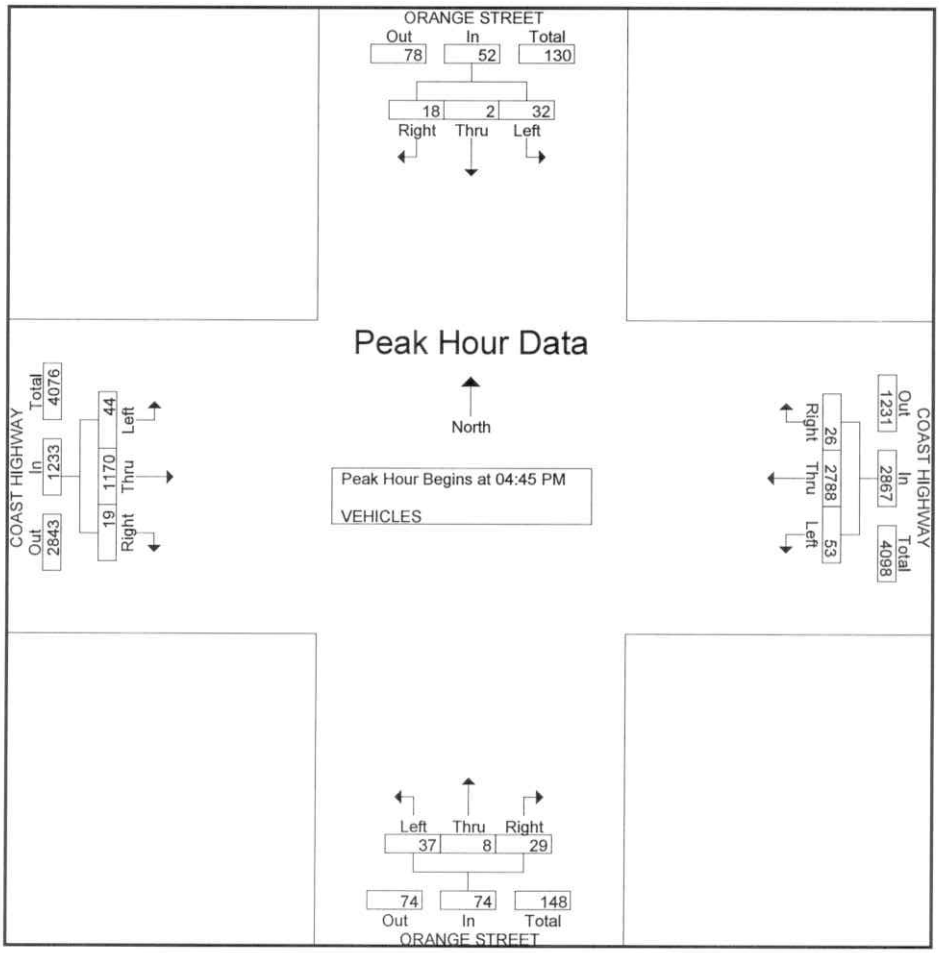

Transportation Studies, Inc.

2860 Walnut Avenue, Suite C
Tustin, CA. 92780

City: NEWPORT BEACH
N-S Direction: PROSPECT STREET
E-W Direction: PACIFIC COAST HIGHWAY

File Name : H0902156
Site Code : 00000000
Start Date : 2/12/2009
Page No : 1

Groups Printed- VEHICLES

	PROSPECT STREET Southbound			PACIFIC COAST HIGHWAY Westbound			PROSPECT STREET Northbound			PACIFIC COAST HIGHWAY Eastbound			
Start Time	Right	Thru	Left	Right	Thru	Left	Right	Thru	Left	Right	Thru	Left	Int. Total
Factor	1.0	1.0	1.0	1.0	1.0	1.0	1.0	1.0	1.0	1.0	1.0	1.0	
07:00 AM	1	0	41	11	184	5	6	0	3	1	541	2	795
07:15 AM	0	0	49	7	245	6	9	0	3	1	610	3	933
07:30 AM	0	0	63	7	246	6	5	0	5	3	614	2	951
07:45 AM	1	0	70	9	256	6	8	0	4	1	617	4	976
Total	2	0	223	34	931	23	28	0	15	6	2382	11	3655
08:00 AM	3	0	77	9	299	8	10	0	5	1	617	2	1031
08:15 AM	2	0	69	7	282	5	9	0	4	2	623	4	1007
08:30 AM	1	0	51	9	275	7	6	0	6	1	633	7	996
08:45 AM	2	0	65	7	262	4	8	0	3	2	614	3	970
Total	8	0	262	32	1118	24	33	0	18	6	2487	16	4004
*** BREAK ***													
04:30 PM	2	0	19	27	627	0	11	0	9	4	277	6	982
04:45 PM	1	1	16	30	614	2	9	0	3	3	302	3	984
Total	3	1	35	57	1241	2	20	0	12	7	579	9	1966
05:00 PM	4	0	21	32	640	3	10	0	2	2	298	2	1014
05:15 PM	2	0	17	27	666	9	8	0	7	2	315	4	1057
05:30 PM	2	0	19	36	675	4	9	0	4	5	323	5	1082
05:45 PM	1	0	28	32	656	6	6	0	7	2	308	3	1049
Total	9	0	85	127	2637	22	33	0	20	11	1244	14	4202
06:00 PM	3	1	24	37	648	4	5	0	3	1	333	4	1063
06:15 PM	3	0	20	31	610	3	2	1	6	1	316	3	996
Grand Total	28	2	649	318	7185	78	121	1	74	32	7341	57	15886
Apprch %	4.1	0.3	95.6	4.2	94.8	1	61.7	0.5	37.8	0.4	98.8	0.8	
Total %	0.2	0	4.1	2	45.2	0.5	0.8	0	0.5	0.2	46.2	0.4	

Transportation Studies, Inc.

2860 Walnut Avenue, Suite C
Tustin, CA. 92780

File Name : H0902156
Site Code : 00000000
Start Date : 2/12/2009
Page No : 2

	PROSPECT STREET Southbound				PACIFIC COAST HIGHWAY Westbound				PROSPECT STREET Northbound				PACIFIC COAST HIGHWAY Eastbound				
Start Time	Right	Thru	Left	App. Total	Right	Thru	Left	App. Total	Right	Thru	Left	App. Total	Right	Thru	Left	App. Total	Int. Total
Peak Hour Analysis From 07:00 AM to 08:45 AM - Peak 1 of 1																	
Peak Hour for Entire Intersection Begins at 07:45 AM																	
07:45 AM	1	0	70	71	**9**	256	6	271	8	0	4	12	1	617	4	622	976
08:00 AM	**3**	0	**77**	**80**	9	**299**	**8**	**316**	**10**	0	5	**15**	1	617	2	620	**1031**
08:15 AM	2	0	69	71	7	282	5	294	9	0	4	13	**2**	623	4	629	1007
08:30 AM	1	0	51	52	9	275	7	291	6	0	**6**	12	1	**633**	**7**	**641**	996
Total Volume	7	0	267	274	34	1112	26	1172	33	0	19	52	5	2490	17	2512	4010
% App. Total	2.6	0	97.4		2.9	94.9	2.2		63.5	0	36.5		0.2	99.1	0.7		
PHF	.583	.000	.867	.856	.944	.930	.813	.927	.825	.000	.792	.867	.625	.983	.607	.980	.972

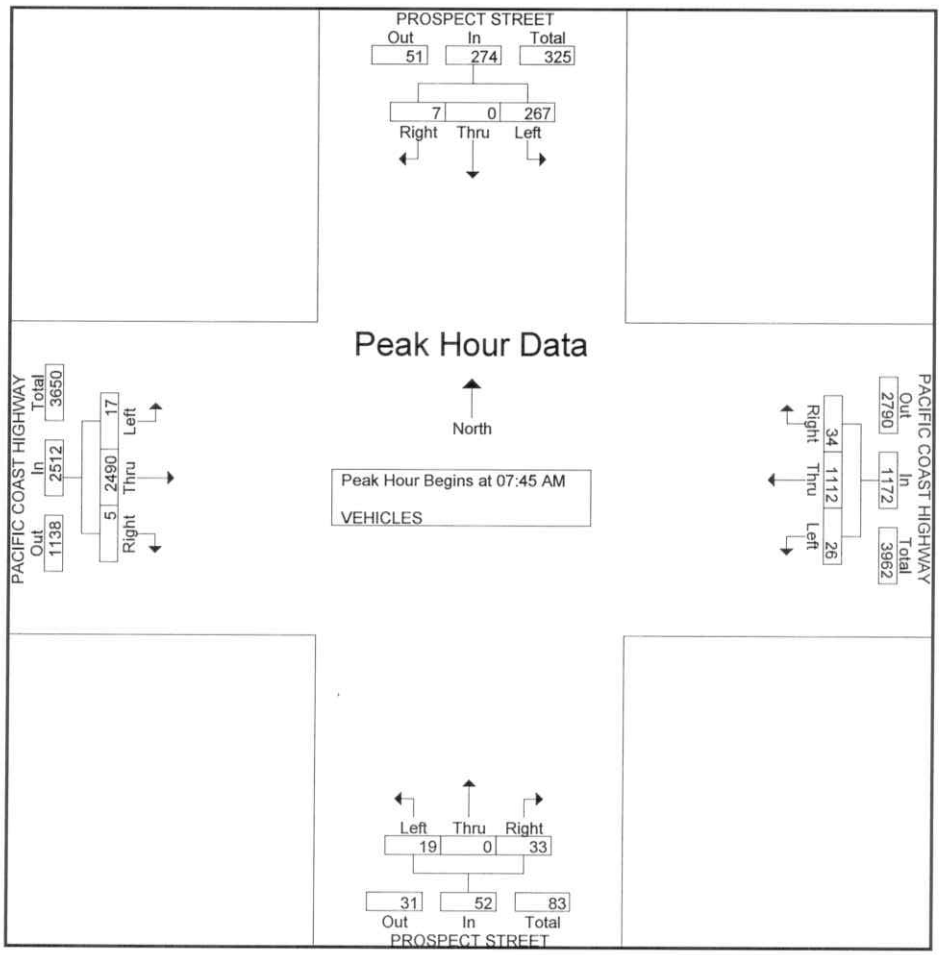

Transportation Studies, Inc.

2860 Walnut Avenue, Suite C
Tustin, CA. 92780

File Name : H0902156
Site Code : 00000000
Start Date : 2/12/2009
Page No : 3

	PROSPECT STREET Southbound				PACIFIC COAST HIGHWAY Westbound				PROSPECT STREET Northbound				PACIFIC COAST HIGHWAY Eastbound				
Start Time	Right	Thru	Left	App. Total	Right	Thru	Left	App. Total	Right	Thru	Left	App. Total	Right	Thru	Left	App. Total	Int. Total
Peak Hour Analysis From 04:30 PM to 06:15 PM - Peak 1 of 1																	
Peak Hour for Entire Intersection Begins at 05:15 PM																	
05:15 PM	2	0	17	19	27	666	**9**	702	8	0	**7**	**15**	2	315	4	321	1057
05:30 PM	2	0	19	21	36	**675**	4	**715**	**9**	0	4	13	**5**	323	**5**	333	**1082**
05:45 PM	1	0	**28**	**29**	32	656	6	694	6	0	7	13	2	308	3	313	1049
06:00 PM	**3**	**1**	24	28	**37**	648	4	689	5	0	3	8	1	**333**	4	**338**	1063
Total Volume	8	1	88	97	132	2645	23	2800	28	0	21	49	10	1279	16	1305	4251
% App. Total	8.2	1	90.7		4.7	94.5	0.8		57.1	0	42.9		0.8	98	1.2		
PHF	.667	.250	.786	.836	.892	.980	.639	.979	.778	.000	.750	.817	.500	.960	.800	.965	.982

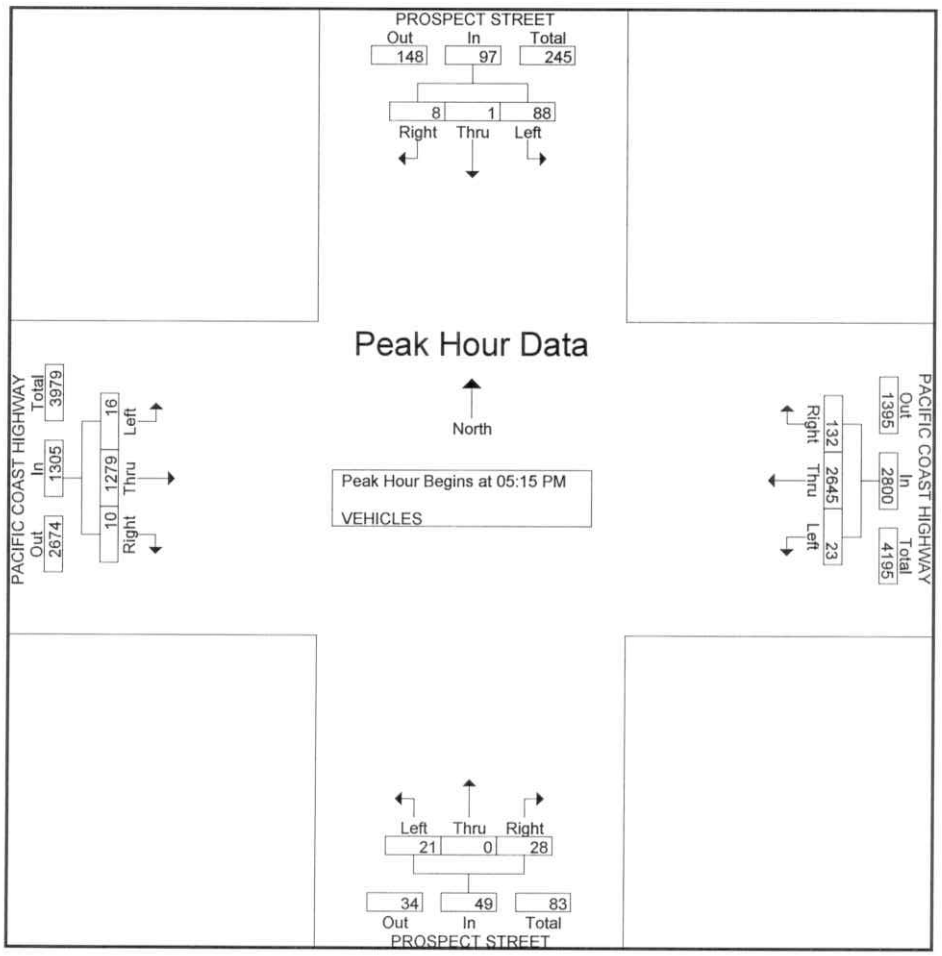

Transportation Studies, Inc.

2860 Walnut Avenue, Suite C
Tustin, CA. 92780

City: NEWPORT BEACH
N-S Direction: SUPERIOR AVENUE
E-W Direction: PACIFIC COAST HIGHWAY

File Name : H0902157
Site Code : 00000000
Start Date : 2/12/2009
Page No : 1

Groups Printed- VEHICLES

	SUPERIOR AVENUE Southbound			PACIFIC COAST HIGHWAY Westbound			SUPERIOR AVENUE Northbound			PACIFIC COAST HIGHWAY Eastbound			
Start Time	Right	Thru	Left	Right	Thru	Left	Right	Thru	Left	Right	Thru	Left	Int. Total
Factor	1.0	1.0	1.0	1.0	1.0	1.0	1.0	1.0	1.0	1.0	1.0	1.0	
07:00 AM	48	31	37	18	158	11	18	49	27	38	409	119	963
07:15 AM	56	36	31	27	163	18	23	57	29	51	447	168	1106
07:30 AM	43	29	38	29	156	20	21	67	38	41	469	150	1101
07:45 AM	59	37	42	31	166	22	24	61	37	50	462	171	1162
Total	206	133	148	105	643	71	86	234	131	180	1787	608	4332
08:00 AM	61	44	43	39	197	24	29	64	42	57	506	187	1293
08:15 AM	68	37	45	47	207	27	30	72	48	53	497	181	1312
08:30 AM	59	47	40	38	198	22	31	69	41	51	449	170	1215
08:45 AM	47	41	36	29	191	26	30	64	39	49	421	159	1132
Total	235	169	164	153	793	99	120	269	170	210	1873	697	4952
*** BREAK ***													
04:30 PM	166	42	47	33	437	41	16	37	53	44	210	56	1182
04:45 PM	147	57	53	38	456	47	19	40	59	49	222	59	1246
Total	313	99	100	71	893	88	35	77	112	93	432	115	2428
05:00 PM	144	46	51	35	470	52	14	52	51	53	230	62	1260
05:15 PM	176	57	59	38	448	58	19	53	62	59	240	63	1332
05:30 PM	189	66	51	42	467	61	21	46	62	66	257	67	1395
05:45 PM	174	61	62	40	458	56	18	53	69	61	251	64	1367
Total	683	230	223	155	1843	227	72	204	244	239	978	256	5354
06:00 PM	171	59	56	42	481	51	20	56	61	57	238	64	1356
06:15 PM	157	51	54	37	464	52	33	64	59	59	233	57	1320
Grand Total	1765	741	745	563	5117	588	366	904	777	838	5541	1797	19742
Apprch %	54.3	22.8	22.9	9	81.6	9.4	17.9	44.2	38	10.2	67.8	22	
Total %	8.9	3.8	3.8	2.9	25.9	3	1.9	4.6	3.9	4.2	28.1	9.1	

Transportation Studies, Inc.

2860 Walnut Avenue, Suite C
Tustin, CA. 92780

File Name : H0902157
Site Code : 00000000
Start Date : 2/12/2009
Page No : 2

	SUPERIOR AVENUE Southbound				PACIFIC COAST HIGHWAY Westbound				SUPERIOR AVENUE Northbound				PACIFIC COAST HIGHWAY Eastbound				
Start Time	Right	Thru	Left	App. Total	Right	Thru	Left	App. Total	Right	Thru	Left	App. Total	Right	Thru	Left	App. Total	Int. Total
Peak Hour Analysis From 07:00 AM to 08:45 AM - Peak 1 of 1																	
Peak Hour for Entire Intersection Begins at 07:45 AM																	
07:45 AM	59	37	42	138	31	166	22	219	24	61	37	122	50	462	171	683	1162
08:00 AM	61	44	43	148	39	197	24	260	29	64	42	135	**57**	**506**	**187**	**750**	1293
08:15 AM	**68**	37	**45**	**150**	**47**	**207**	**27**	**281**	30	**72**	**48**	**150**	53	497	181	731	**1312**
08:30 AM	59	**47**	40	146	38	198	22	258	**31**	69	41	141	51	449	170	670	1215
Total Volume	247	165	170	582	155	768	95	1018	114	266	168	548	211	1914	709	2834	4982
% App. Total	42.4	28.4	29.2		15.2	75.4	9.3		20.8	48.5	30.7		7.4	67.5	25		
PHF	.908	.878	.944	.970	.824	.928	.880	.906	.919	.924	.875	.913	.925	.946	.948	.945	.949

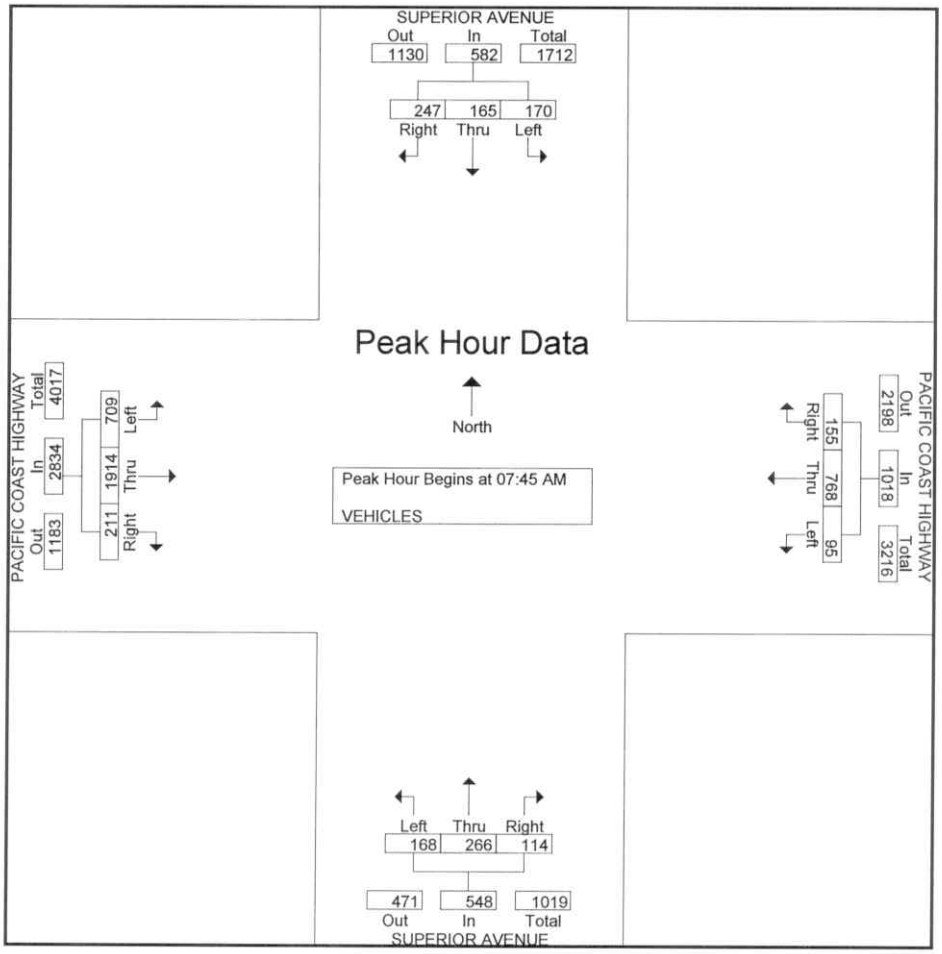

Transportation Studies, Inc.

2860 Walnut Avenue, Suite C
Tustin, CA. 92780

File Name : H0902157
Site Code : 00000000
Start Date : 2/12/2009
Page No : 3

	SUPERIOR AVENUE Southbound				PACIFIC COAST HIGHWAY Westbound				SUPERIOR AVENUE Northbound				PACIFIC COAST HIGHWAY Eastbound				
Start Time	Right	Thru	Left	App. Total	Right	Thru	Left	App. Total	Right	Thru	Left	App. Total	Right	Thru	Left	App. Total	Int. Total
Peak Hour Analysis From 04:30 PM to 06:15 PM - Peak 1 of 1																	
Peak Hour for Entire Intersection Begins at 05:15 PM																	
05:15 PM	176	57	59	292	38	448	58	544	19	53	62	134	59	240	63	362	1332
05:30 PM	**189**	**66**	51	**306**	**42**	467	**61**	570	**21**	46	62	129	**66**	**257**	**67**	**390**	**1395**
05:45 PM	174	61	**62**	297	40	458	56	554	18	53	**69**	**140**	61	251	64	376	1367
06:00 PM	171	59	56	286	42	**481**	51	**574**	20	**56**	61	137	57	238	64	359	1356
Total Volume	710	243	228	1181	162	1854	226	2242	78	208	254	540	243	986	258	1487	5450
% App. Total	60.1	20.6	19.3		7.2	82.7	10.1		14.4	38.5	47		16.3	66.3	17.4		
PHF	.939	.920	.919	.965	.964	.964	.926	.976	.929	.929	.920	.964	.920	.959	.963	.953	.977

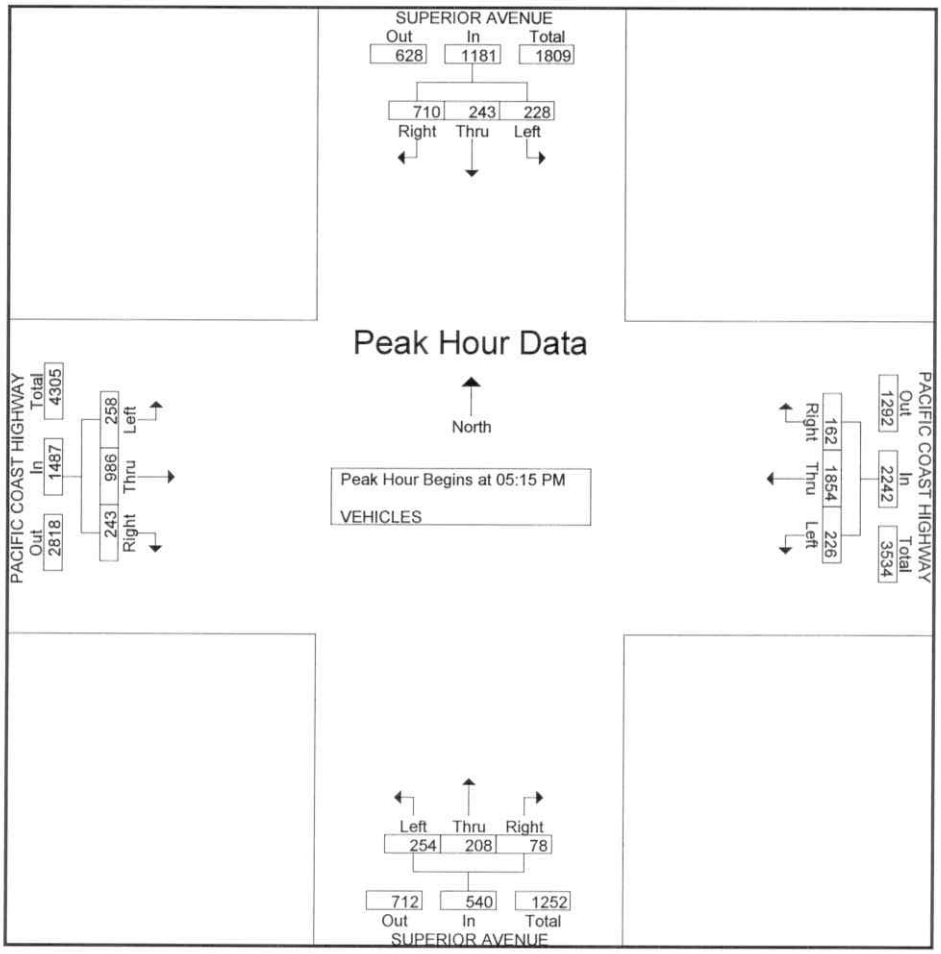

Transportation Studies, Inc.

2860 Walnut Avenue, Suite C
Tustin, CA. 92780

City: NEWPORT BEACH
N-S Direction: NEWPORT BOULEVARD
E-W Direction: PACIFIC COAST HIGHWAY

File Name : H0902158
Site Code : 00000000
Start Date : 2/12/2009
Page No : 1

Groups Printed- VEHICLES

	NEWPORT BOULEVARD ON/OFF RAMPS Southbound			PACIFIC COAST HIGHWAY Westbound			NEWPORT BOULEVARD ON RAMP Northbound			PACIFIC COAST HIGHWAY Eastbound			
Start Time	Right	Thru	Left	Right	Thru	Left	Right	Thru	Left	Right	Thru	Left	Int. Total
Factor	1.0	1.0	1.0	1.0	1.0	1.0	1.0	1.0	1.0	1.0	1.0	1.0	
07:00 AM	44	0	73	55	123	0	0	0	0	12	320	0	627
07:15 AM	41	0	77	55	144	0	0	0	0	24	373	0	714
07:30 AM	53	0	86	49	168	0	0	0	0	40	468	0	864
07:45 AM	64	0	99	75	210	0	0	0	0	46	547	0	1041
Total	202	0	335	234	645	0	0	0	0	122	1708	0	3246
08:00 AM	73	0	106	87	197	0	0	0	0	53	524	0	1040
08:15 AM	80	0	92	97	214	0	0	0	0	40	504	0	1027
08:30 AM	71	0	86	90	191	0	0	0	0	49	507	0	994
08:45 AM	63	0	87	79	199	0	0	0	0	46	487	0	961
Total	287	0	371	353	801	0	0	0	0	188	2022	0	4022
*** BREAK ***													
04:30 PM	87	0	140	122	413	0	0	0	0	33	287	0	1082
04:45 PM	104	0	138	113	444	0	0	0	0	37	328	0	1164
Total	191	0	278	235	857	0	0	0	0	70	615	0	2246
05:00 PM	122	0	153	127	456	0	0	0	0	31	322	0	1211
05:15 PM	110	0	139	108	472	0	0	0	0	44	310	0	1183
05:30 PM	57	0	156	139	451	0	0	0	0	47	301	0	1151
05:45 PM	119	0	140	120	428	0	0	0	0	44	307	0	1158
Total	408	0	588	494	1807	0	0	0	0	166	1240	0	4703
06:00 PM	104	0	137	119	437	0	0	0	0	37	310	0	1144
06:15 PM	93	0	127	101	420	0	0	0	0	39	314	0	1094
Grand Total	1285	0	1836	1536	4967	0	0	0	0	622	6209	0	16455
Apprch %	41.2	0	58.8	23.6	76.4	0	0	0	0	9.1	90.9	0	
Total %	7.8	0	11.2	9.3	30.2	0	0	0	0	3.8	37.7	0	

Transportation Studies, Inc.

2860 Walnut Avenue, Suite C
Tustin, CA. 92780

File Name : H0902158
Site Code : 00000000
Start Date : 2/12/2009
Page No : 2

	NEWPORT BOULEVARD ON/OFF RAMPS Southbound				PACIFIC COAST HIGHWAY Westbound				NEWPORT BOULEVARD ON RAMP Northbound				PACIFIC COAST HIGHWAY Eastbound				
Start Time	Right	Thru	Left	App. Total	Right	Thru	Left	App. Total	Right	Thru	Left	App. Total	Right	Thru	Left	App. Total	Int. Total
Peak Hour Analysis From 07:00 AM to 08:45 AM - Peak 1 of 1																	
Peak Hour for Entire Intersection Begins at 07:45 AM																	
07:45 AM	64	0	99	163	75	210	0	285	0	0	0	0	46	**547**	0	**593**	**1041**
08:00 AM	73	0	**106**	**179**	87	197	0	284	0	0	0	0	**53**	524	0	577	1040
08:15 AM	**80**	0	92	172	**97**	**214**	0	**311**	0	0	0	0	40	504	0	544	1027
08:30 AM	71	0	86	157	90	191	0	281	0	0	0	0	49	507	0	556	994
Total Volume	288	0	383	671	349	812	0	1161	0	0	0	0	188	2082	0	2270	4102
% App. Total	42.9	0	57.1		30.1	69.9	0		0	0	0		8.3	91.7	0		
PHF	.900	.000	.903	.937	.899	.949	.000	.933	.000	.000	.000	.000	.887	.952	.000	.957	.985

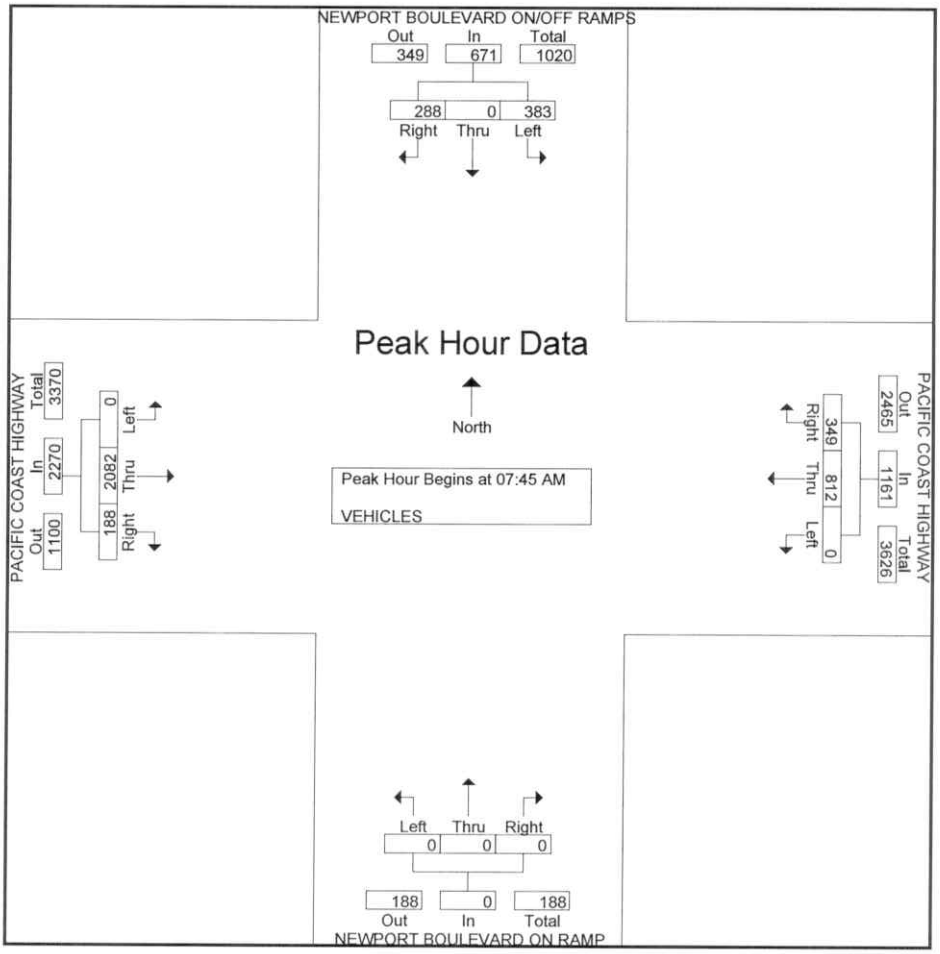

Transportation Studies, Inc.

2860 Walnut Avenue, Suite C
Tustin, CA. 92780

File Name : H0902158
Site Code : 00000000
Start Date : 2/12/2009
Page No : 3

	NEWPORT BOULEVARD ON/OFF RAMPS Southbound				PACIFIC COAST HIGHWAY Westbound				NEWPORT BOULEVARD ON RAMP Northbound				PACIFIC COAST HIGHWAY Eastbound				
Start Time	Right	Thru	Left	App. Total	Right	Thru	Left	App. Total	Right	Thru	Left	App. Total	Right	Thru	Left	App. Total	Int. Total
Peak Hour Analysis From 04:30 PM to 06:15 PM - Peak 1 of 1																	
Peak Hour for Entire Intersection Begins at 04:45 PM																	
04:45 PM	104	0	138	242	113	444	0	557	0	0	0	0	37	**328**	0	**365**	1164
05:00 PM	**122**	0	153	**275**	127	456	0	583	0	0	0	0	31	322	0	353	**1211**
05:15 PM	110	0	139	249	108	**472**	0	580	0	0	0	0	44	310	0	354	1183
05:30 PM	57	0	**156**	213	**139**	451	0	**590**	0	0	0	0	**47**	301	0	348	1151
Total Volume	393	0	586	979	487	1823	0	2310	0	0	0	0	159	1261	0	1420	4709
% App. Total	40.1	0	59.9		21.1	78.9	0		0	0	0		11.2	88.8	0		
PHF	.805	.000	.939	.890	.876	.966	.000	.979	.000	.000	.000	.000	.846	.961	.000	.973	.972

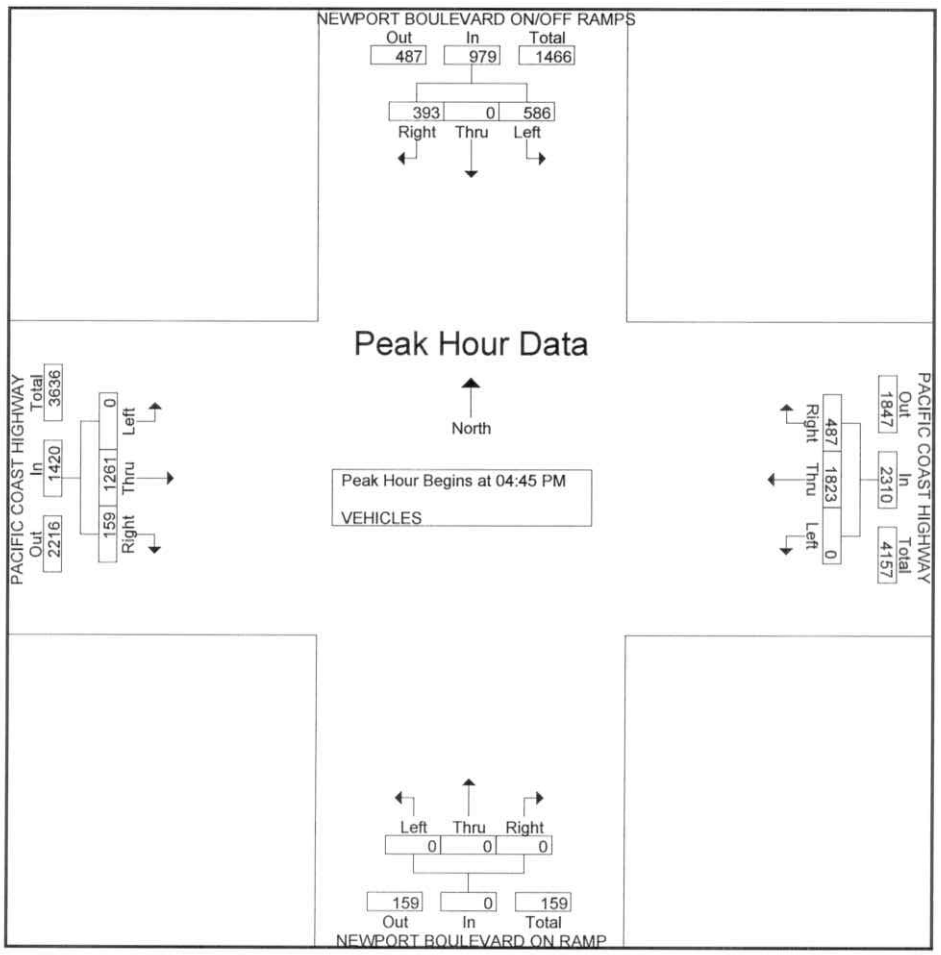

Transportation Studies, Inc.

2860 Walnut Avenue, Suite C
Tustin, CA. 92780

City: NEWPORT BEACH
N-S Direction: RIVERSIDE AVENUE
E-W Direction: COAST HIGHWAY

File Name : H0903065
Site Code : 00000000
Start Date : 3/18/2009
Page No : 1

Groups Printed- VEHICLES

	RIVERSIDE AVENUE Southbound			COAST HIGHWAY Westbound			RIVERSIDE AVENUE Northbound			COAST HIGHWAY Eastbound			
Start Time	Right	Thru	Left	Right	Thru	Left	Right	Thru	Left	Right	Thru	Left	Int. Total
Factor	1.0	1.0	1.0	1.0	1.0	1.0	1.0	1.0	1.0	1.0	1.0	1.0	
07:00 AM	24	1	5	6	181	2	0	0	0	0	255	27	501
07:15 AM	42	0	15	14	201	0	0	0	0	1	375	58	706
07:30 AM	74	0	16	17	201	0	0	0	0	0	422	88	818
07:45 AM	103	0	18	15	257	4	0	0	0	1	472	81	951
Total	243	1	54	52	840	6	0	0	0	2	1524	254	2976
08:00 AM	77	0	14	18	270	4	0	0	0	1	479	71	934
08:15 AM	49	3	23	16	297	5	0	0	0	1	470	74	938
08:30 AM	75	1	22	18	300	4	1	0	0	1	472	86	980
08:45 AM	67	2	16	11	288	5	0	2	0	4	445	78	918
Total	268	6	75	63	1155	18	1	2	0	7	1866	309	3770
*** BREAK ***													
04:30 PM	95	1	19	19	447	2	0	2	3	5	394	68	1055
04:45 PM	82	0	22	22	470	3	3	0	2	3	319	61	987
Total	177	1	41	41	917	5	3	2	5	8	713	129	2042
05:00 PM	95	0	24	24	506	2	0	0	0	1	332	64	1048
05:15 PM	106	0	27	18	565	4	0	2	4	1	351	67	1145
05:30 PM	100	0	27	11	530	2	0	4	4	3	354	61	1096
05:45 PM	103	2	20	17	554	3	2	5	2	0	336	52	1096
Total	404	2	98	70	2155	11	2	11	10	5	1373	244	4385
06:00 PM	77	0	16	5	534	2	1	2	3	6	316	46	1008
06:15 PM	75	0	19	4	432	4	1	2	3	5	320	52	917
Grand Total	1244	10	303	235	6033	46	8	19	21	33	6112	1034	15098
Apprch %	79.9	0.6	19.5	3.7	95.5	0.7	16.7	39.6	43.8	0.5	85.1	14.4	
Total %	8.2	0.1	2	1.6	40	0.3	0.1	0.1	0.1	0.2	40.5	6.8	

Transportation Studies, Inc.

2860 Walnut Avenue, Suite C
Tustin, CA. 92780

File Name : H0903065
Site Code : 00000000
Start Date : 3/18/2009
Page No : 2

	RIVERSIDE AVENUE Southbound				COAST HIGHWAY Westbound				RIVERSIDE AVENUE Northbound				COAST HIGHWAY Eastbound				
Start Time	Right	Thru	Left	App. Total	Right	Thru	Left	App. Total	Right	Thru	Left	App. Total	Right	Thru	Left	App. Total	Int. Total
Peak Hour Analysis From 07:00 AM to 08:45 AM - Peak 1 of 1																	
Peak Hour for Entire Intersection Begins at 07:45 AM																	
07:45 AM	**103**	0	18	**121**	15	257	4	276	0	0	0	0	**1**	472	81	554	951
08:00 AM	77	0	14	91	**18**	270	4	292	0	0	0	0	1	**479**	71	551	934
08:15 AM	49	**3**	**23**	75	16	297	**5**	318	0	0	0	0	1	470	74	545	938
08:30 AM	75	1	22	98	18	**300**	4	**322**	**1**	0	0	**1**	1	472	**86**	**559**	**980**
Total Volume	304	4	77	385	67	1124	17	1208	1	0	0	1	4	1893	312	2209	3803
% App. Total	79	1	20		5.5	93	1.4		100	0	0		0.2	85.7	14.1		
PHF	.738	.333	.837	.795	.931	.937	.850	.938	.250	.000	.000	.250	1.000	.988	.907	.988	.970

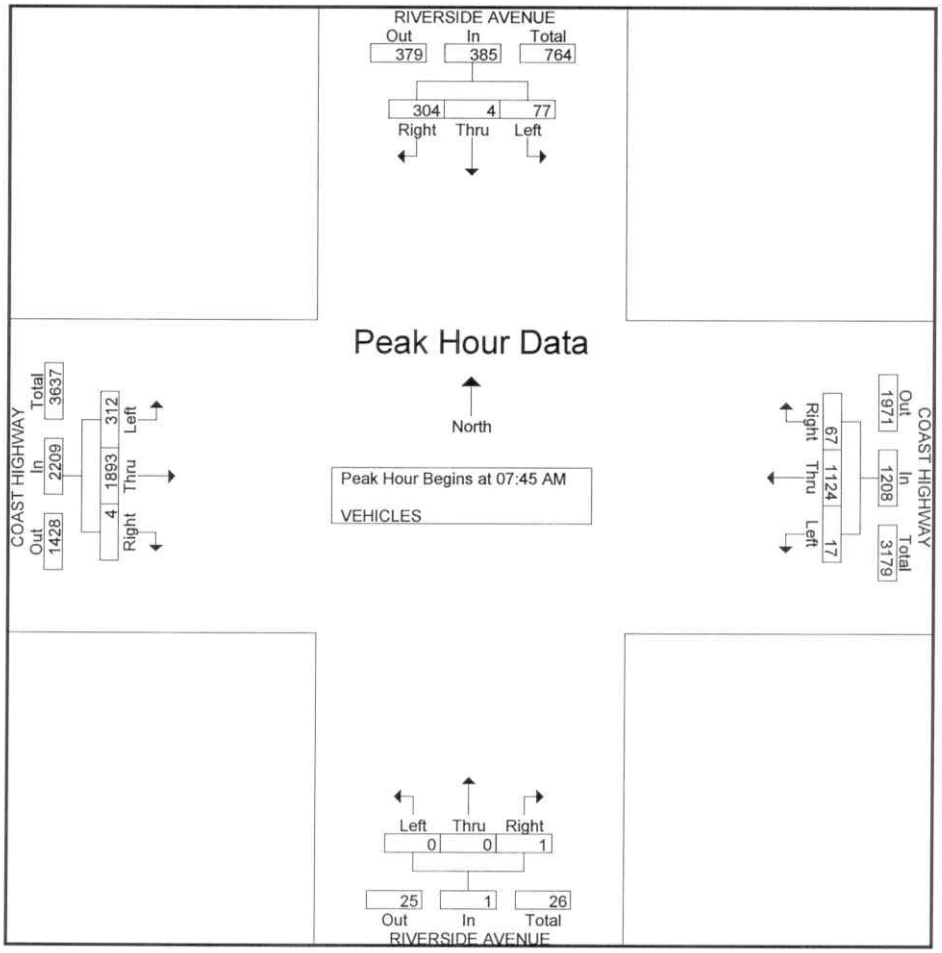

Transportation Studies, Inc.

2860 Walnut Avenue, Suite C
Tustin, CA. 92780

File Name : H0903065
Site Code : 00000000
Start Date : 3/18/2009
Page No : 3

	RIVERSIDE AVENUE Southbound				COAST HIGHWAY Westbound				RIVERSIDE AVENUE Northbound				COAST HIGHWAY Eastbound				
Start Time	Right	Thru	Left	App. Total	Right	Thru	Left	App. Total	Right	Thru	Left	App. Total	Right	Thru	Left	App. Total	Int. Total
Peak Hour Analysis From 04:30 PM to 06:15 PM - Peak 1 of 1																	
Peak Hour for Entire Intersection Begins at 05:00 PM																	
05:00 PM	95	0	24	119	**24**	506	2	532	0	0	0	0	1	332	64	397	1048
05:15 PM	**106**	0	**27**	**133**	18	**565**	**4**	**587**	0	2	**4**	6	1	351	**67**	**419**	**1145**
05:30 PM	100	0	27	127	11	530	2	543	0	4	4	8	**3**	**354**	61	418	1096
05:45 PM	103	**2**	20	125	17	554	3	574	**2**	**5**	2	**9**	0	336	52	388	1096
Total Volume	404	2	98	504	70	2155	11	2236	2	11	10	23	5	1373	244	1622	4385
% App. Total	80.2	0.4	19.4		3.1	96.4	0.5		8.7	47.8	43.5		0.3	84.6	15		
PHF	.953	.250	.907	.947	.729	.954	.688	.952	.250	.550	.625	.639	.417	.970	.910	.968	.957

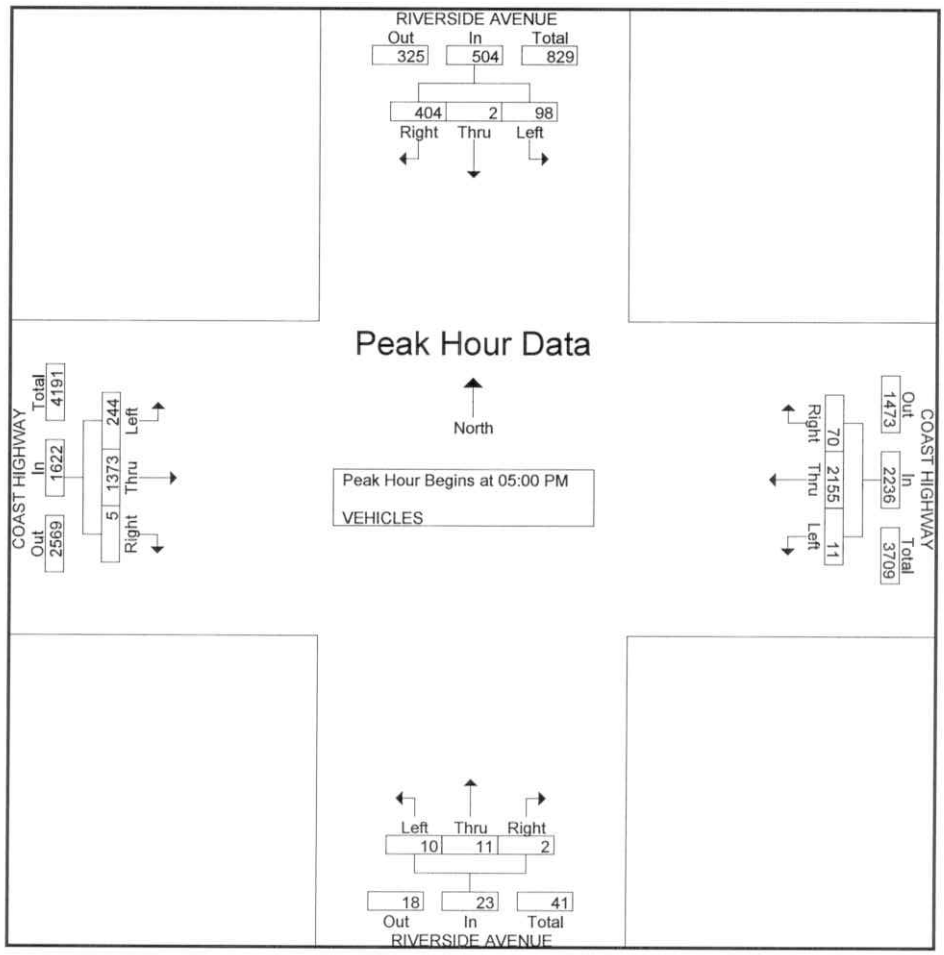

Transportation Studies, Inc.

2860 Walnut Avenue, Suite C
Tustin, CA. 92780

City: NEWPORT BEACH
N-S Direction: TUSTIN AVENUE
E-W Direction: COAST HIGHWAY

File Name : H0903066
Site Code : 00000000
Start Date : 3/19/2009
Page No : 1

Groups Printed- VEHICLES

	TUSTIN AVENUE Southbound			COAST HIGHWAY Westbound			DRIVEWAY Northbound			COAST HIGHWAY Eastbound			
Start Time	Right	Thru	Left	Right	Thru	Left	Right	Thru	Left	Right	Thru	Left	Int. Total
Factor	1.0	1.0	1.0	1.0	1.0	1.0	1.0	1.0	1.0	1.0	1.0	1.0	
07:00 AM	0	0	2	1	130	0	0	0	0	0	217	2	352
07:15 AM	2	1	5	2	209	0	0	0	0	0	346	3	568
07:30 AM	1	0	5	4	205	0	0	0	0	0	450	11	676
07:45 AM	3	1	5	17	281	1	0	0	0	0	520	15	843
Total	6	2	17	24	825	1	0	0	0	0	1533	31	2439
08:00 AM	4	0	8	8	305	0	0	0	0	0	520	12	857
08:15 AM	3	0	12	3	317	0	0	0	0	1	472	11	819
08:30 AM	4	0	8	7	317	0	0	0	0	0	480	4	820
08:45 AM	0	0	10	17	312	0	0	0	0	1	487	9	836
Total	11	0	38	35	1251	0	0	0	0	2	1959	36	3332
*** BREAK ***													
04:30 PM	1	0	11	10	426	0	0	0	0	2	297	30	777
04:45 PM	19	0	12	14	505	0	0	0	0	1	321	39	911
Total	20	0	23	24	931	0	0	0	0	3	618	69	1688
05:00 PM	12	0	12	13	521	0	0	0	0	0	337	50	945
05:15 PM	4	0	19	14	574	0	0	0	0	6	362	12	991
05:30 PM	7	0	12	12	548	0	0	1	0	8	332	10	930
05:45 PM	4	0	12	13	587	0	2	0	0	6	345	22	991
Total	27	0	55	52	2230	0	2	1	0	20	1376	94	3857
06:00 PM	5	0	15	11	508	0	0	0	0	3	326	18	886
06:15 PM	2	0	15	12	471	0	1	0	0	5	274	22	802
Grand Total	71	2	163	158	6216	1	3	1	0	33	6086	270	13004
Apprch %	30.1	0.8	69.1	2.5	97.5	0	75	25	0	0.5	95.3	4.2	
Total %	0.5	0	1.3	1.2	47.8	0	0	0	0	0.3	46.8	2.1	

Transportation Studies, Inc.

2860 Walnut Avenue, Suite C
Tustin, CA. 92780

File Name : H0903066
Site Code : 00000000
Start Date : 3/19/2009
Page No : 2

	TUSTIN AVENUE Southbound				COAST HIGHWAY Westbound				DRIVEWAY Northbound				COAST HIGHWAY Eastbound				
Start Time	Right	Thru	Left	App. Total	Right	Thru	Left	App. Total	Right	Thru	Left	App. Total	Right	Thru	Left	App. Total	Int. Total
Peak Hour Analysis From 07:00 AM to 08:45 AM - Peak 1 of 1																	
Peak Hour for Entire Intersection Begins at 07:45 AM																	
07:45 AM	3	**1**	5	9	**17**	281	**1**	299	0	0	0	0	0	**520**	**15**	**535**	843
08:00 AM	**4**	0	8	12	8	305	0	313	0	0	0	0	0	520	12	532	**857**
08:15 AM	3	0	**12**	**15**	3	**317**	0	320	0	0	0	0	**1**	472	11	484	819
08:30 AM	4	0	8	12	7	317	0	**324**	0	0	0	0	0	480	4	484	820
Total Volume	14	1	33	48	35	1220	1	1256	0	0	0	0	1	1992	42	2035	3339
% App. Total	29.2	2.1	68.8		2.8	97.1	0.1		0	0	0		0	97.9	2.1		
PHF	.875	.250	.688	.800	.515	.962	.250	.969	.000	.000	.000	.000	.250	.958	.700	.951	.974

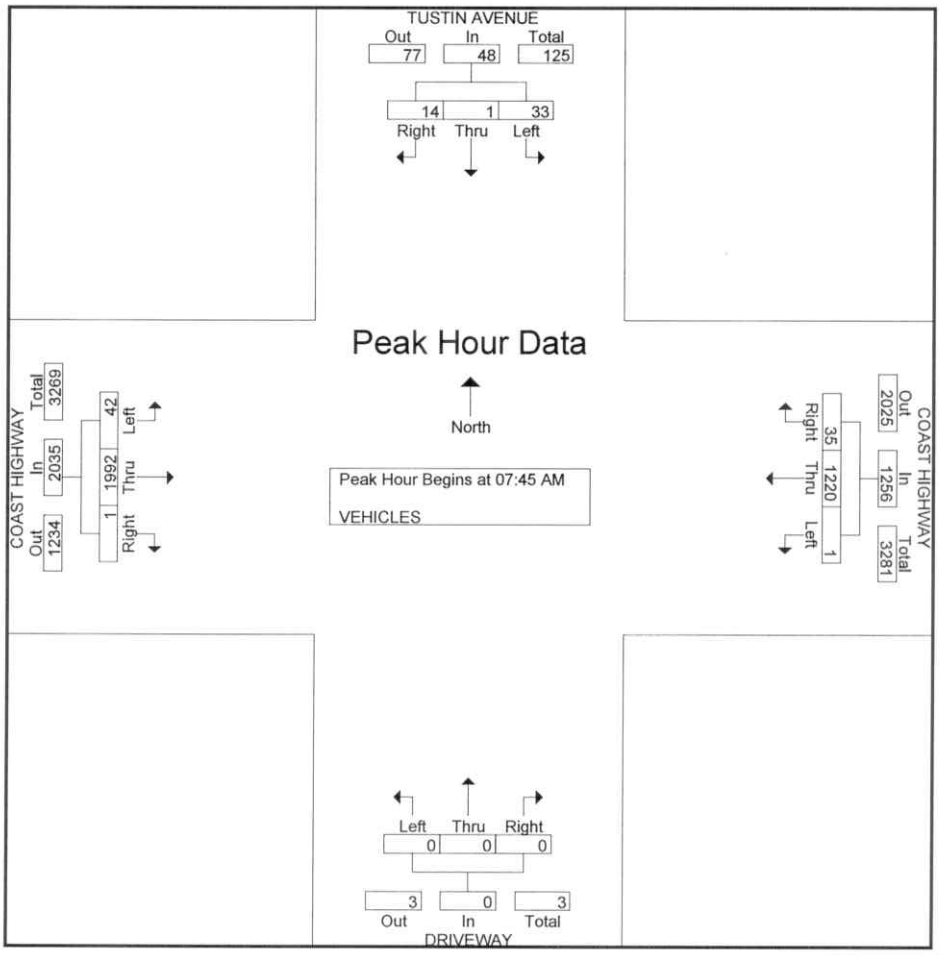

Transportation Studies, Inc.

2860 Walnut Avenue, Suite C
Tustin, CA. 92780

File Name : H0903066
Site Code : 00000000
Start Date : 3/19/2009
Page No : 3

	TUSTIN AVENUE Southbound				COAST HIGHWAY Westbound				DRIVEWAY Northbound				COAST HIGHWAY Eastbound				
Start Time	Right	Thru	Left	App. Total	Right	Thru	Left	App. Total	Right	Thru	Left	App. Total	Right	Thru	Left	App. Total	Int. Total
Peak Hour Analysis From 04:30 PM to 06:15 PM - Peak 1 of 1																	
Peak Hour for Entire Intersection Begins at 05:00 PM																	
05:00 PM	**12**	0	12	**24**	13	521	0	534	0	0	0	0	0	337	**50**	**387**	945
05:15 PM	4	0	**19**	23	**14**	574	0	588	0	0	0	0	6	**362**	12	380	**991**
05:30 PM	7	0	12	19	12	548	0	560	0	**1**	0	1	**8**	332	10	350	930
05:45 PM	4	0	12	16	13	**587**	0	**600**	**2**	0	0	**2**	6	345	22	373	991
Total Volume	27	0	55	82	52	2230	0	2282	2	1	0	3	20	1376	94	1490	3857
% App. Total	32.9	0	67.1		2.3	97.7	0		66.7	33.3	0		1.3	92.3	6.3		
PHF	.563	.000	.724	.854	.929	.950	.000	.951	.250	.250	.000	.375	.625	.950	.470	.963	.973

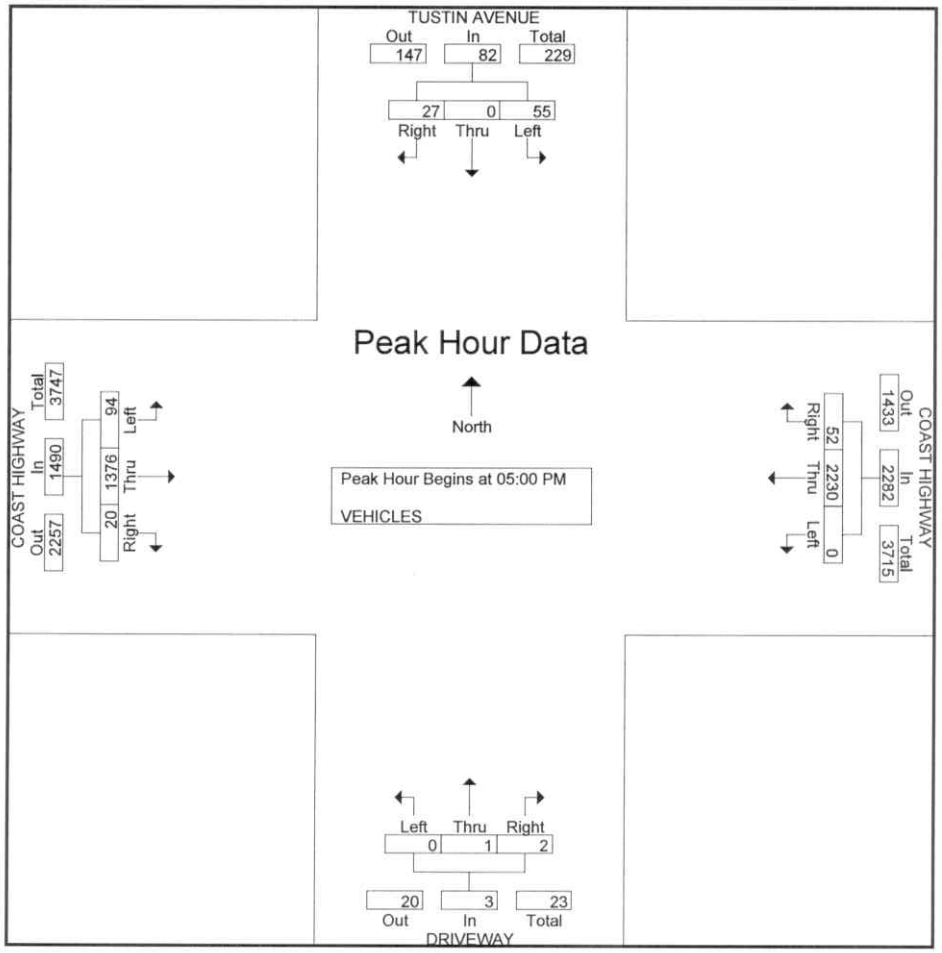

Transportation Studies, Inc.

2860 Walnut Avenue, Suite C
Tustin, CA. 92780

City: NEWPORT BEACH
N-S Direction: DOVER DR/BAY SHORE DR
E-W Direction: COAST HIGHWAY

File Name : H0903062
Site Code : 00000000
Start Date : 3/19/2009
Page No : 1

Groups Printed- VEHICLES

	DOVER DRIVE Southbound			COAST HIGHWAY Westbound			BAY SHORE DRIVE Northbound			COAST HIGHWAY Eastbound			
Start Time	Right	Thru	Left	Right	Thru	Left	Right	Thru	Left	Right	Thru	Left	Int. Total
Factor	1.0	1.0	1.0	1.0	1.0	1.0	1.0	1.0	1.0	1.0	1.0	1.0	
07:00 AM	20	16	99	71	121	4	5	2	5	2	258	14	617
07:15 AM	27	7	147	97	200	3	8	11	3	1	361	15	880
07:30 AM	29	7	190	136	205	8	13	16	6	2	382	31	1025
07:45 AM	36	7	223	134	221	5	12	21	7	4	403	36	1109
Total	112	37	659	438	747	20	38	50	21	9	1404	96	3631
08:00 AM	28	13	196	125	305	19	11	15	2	5	477	28	1224
08:15 AM	27	14	214	114	310	8	8	17	4	4	475	26	1221
08:30 AM	32	13	234	122	283	10	6	10	1	8	499	30	1248
08:45 AM	21	11	196	108	314	5	4	19	9	8	461	33	1189
Total	108	51	840	469	1212	42	29	61	16	25	1912	117	4882
*** BREAK ***													
04:30 PM	34	11	226	230	457	17	2	9	10	5	320	31	1352
04:45 PM	23	17	219	286	430	13	12	12	5	3	289	36	1345
Total	57	28	445	516	887	30	14	21	15	8	609	67	2697
05:00 PM	36	16	215	263	543	8	7	13	11	3	344	34	1493
05:15 PM	25	21	193	271	528	16	14	7	6	8	282	38	1409
05:30 PM	30	12	267	217	546	12	6	10	7	6	333	36	1482
05:45 PM	28	12	243	270	536	14	14	12	11	8	311	37	1496
Total	119	61	918	1021	2153	50	41	42	35	25	1270	145	5880
06:00 PM	26	13	211	282	486	11	6	12	8	4	298	28	1385
06:15 PM	30	17	197	227	436	14	8	16	2	4	298	28	1277
Grand Total	452	207	3270	2953	5921	167	136	202	97	75	5791	481	19752
Apprch %	11.5	5.3	83.2	32.7	65.5	1.8	31.3	46.4	22.3	1.2	91.2	7.6	
Total %	2.3	1	16.6	15	30	0.8	0.7	1	0.5	0.4	29.3	2.4	

Transportation Studies, Inc.

2860 Walnut Avenue, Suite C
Tustin, CA. 92780

File Name : H0903062
Site Code : 00000000
Start Date : 3/19/2009
Page No : 2

	DOVER DRIVE Southbound				COAST HIGHWAY Westbound				BAY SHORE DRIVE Northbound				COAST HIGHWAY Eastbound				
Start Time	Right	Thru	Left	App. Total	Right	Thru	Left	App. Total	Right	Thru	Left	App. Total	Right	Thru	Left	App. Total	Int. Total
Peak Hour Analysis From 07:00 AM to 08:45 AM - Peak 1 of 1																	
Peak Hour for Entire Intersection Begins at 08:00 AM																	
08:00 AM	28	13	196	237	**125**	305	**19**	**449**	**11**	15	2	28	5	477	28	510	1224
08:15 AM	27	**14**	214	255	114	310	8	432	8	17	4	29	4	475	26	505	1221
08:30 AM	**32**	13	**234**	**279**	122	283	10	415	6	10	1	17	**8**	**499**	30	**537**	**1248**
08:45 AM	21	11	196	228	108	**314**	5	427	4	**19**	**9**	**32**	8	461	**33**	502	1189
Total Volume	108	51	840	999	469	1212	42	1723	29	61	16	106	25	1912	117	2054	4882
% App. Total	10.8	5.1	84.1		27.2	70.3	2.4		27.4	57.5	15.1		1.2	93.1	5.7		
PHF	.844	.911	.897	.895	.938	.965	.553	.959	.659	.803	.444	.828	.781	.958	.886	.956	.978

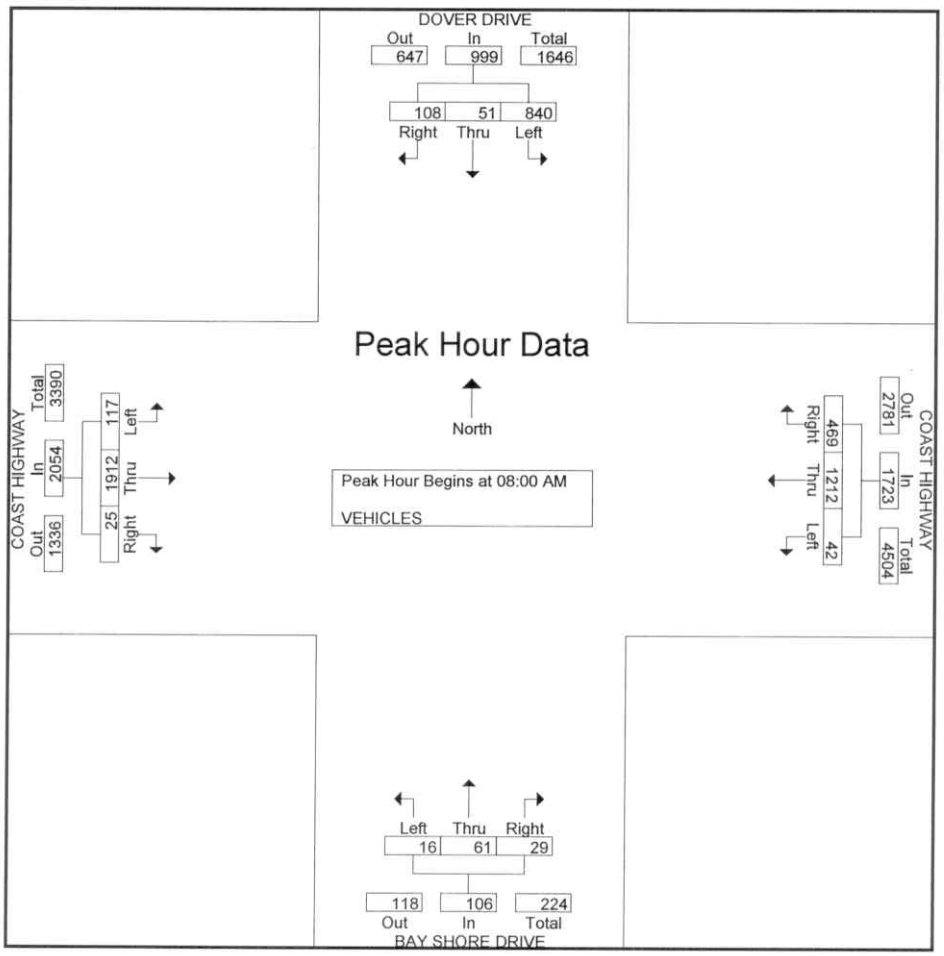

Transportation Studies, Inc.

2860 Walnut Avenue, Suite C
Tustin, CA. 92780

File Name : H0903062
Site Code : 00000000
Start Date : 3/19/2009
Page No : 3

	DOVER DRIVE Southbound				COAST HIGHWAY Westbound				BAY SHORE DRIVE Northbound				COAST HIGHWAY Eastbound				
Start Time	Right	Thru	Left	App. Total	Right	Thru	Left	App. Total	Right	Thru	Left	App. Total	Right	Thru	Left	App. Total	Int. Total
Peak Hour Analysis From 04:30 PM to 06:15 PM - Peak 1 of 1																	
Peak Hour for Entire Intersection Begins at 05:00 PM																	
05:00 PM	**36**	16	215	267	263	543	8	814	7	**13**	**11**	31	3	**344**	34	**381**	1493
05:15 PM	25	**21**	193	239	**271**	528	**16**	815	**14**	7	6	27	**8**	282	**38**	328	1409
05:30 PM	30	12	**267**	**309**	217	**546**	12	775	6	10	7	23	6	333	36	375	1482
05:45 PM	28	12	243	283	270	536	14	**820**	14	12	11	**37**	8	311	37	356	**1496**
Total Volume	119	61	918	1098	1021	2153	50	3224	41	42	35	118	25	1270	145	1440	5880
% App. Total	10.8	5.6	83.6		31.7	66.8	1.6		34.7	35.6	29.7		1.7	88.2	10.1		
PHF	.826	.726	.860	.888	.942	.986	.781	.983	.732	.808	.795	.797	.781	.923	.954	.945	.983

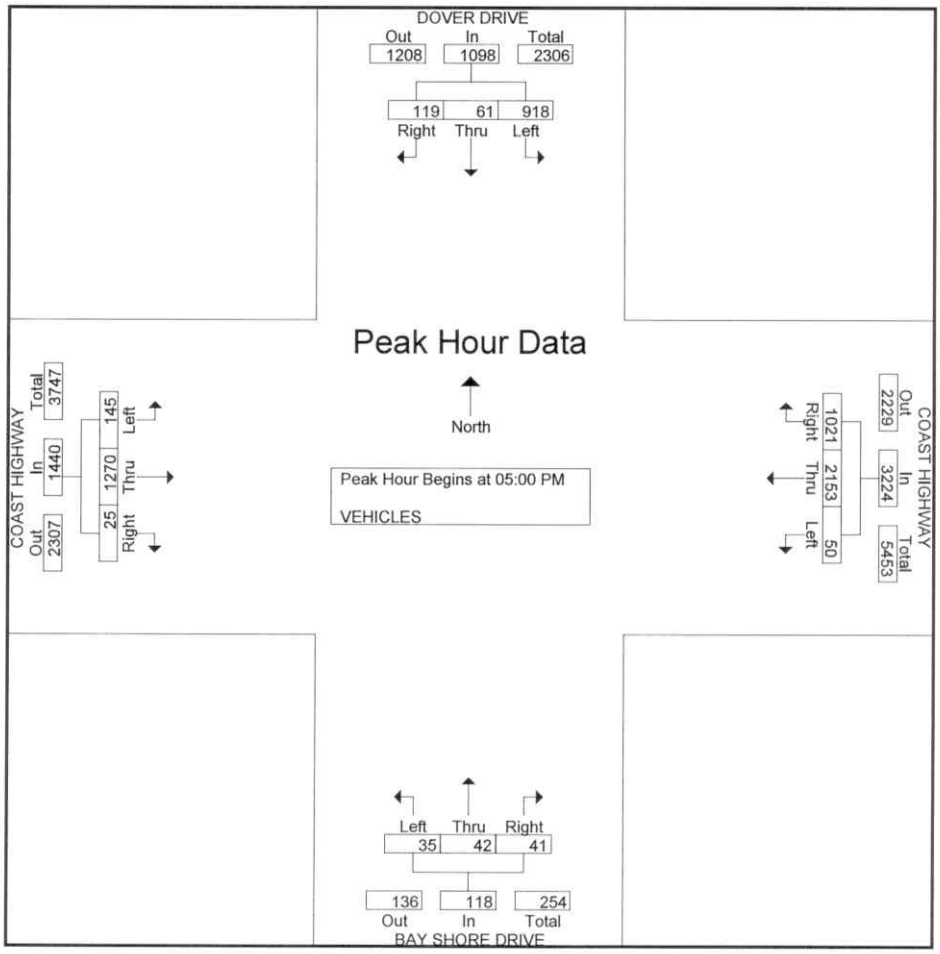

Transportation Studies, Inc.

2860 Walnut Avenue, Suite C
Tustin, CA. 92780

City: HUNTINGTON BEACH
N-S Direction: MAGNOLIA STREET
E-W Direction: HAMILTON AVENUE

File Name : H0905040
Site Code : 00000979
Start Date : 5/7/2009
Page No : 1

Groups Printed- Vehicles

	MAGNOLIA STREET Southbound			HAMILTON AVENUE Westbound			MAGNOLIA STREET Northbound			HAMILTON AVENUE Eastbound			
Start Time	Right	Thru	Left	Right	Thru	Left	Right	Thru	Left	Right	Thru	Left	Int. Total
Factor	1.0	1.0	1.0	1.0	1.0	1.0	1.0	1.0	1.0	1.0	1.0	1.0	
07:00 AM	8	60	33	66	24	10	12	27	7	17	53	15	332
07:15 AM	2	61	24	34	28	10	5	39	12	24	70	2	311
07:30 AM	0	59	43	50	34	6	8	39	7	27	75	5	353
07:45 AM	7	63	32	60	38	17	6	54	14	34	80	8	413
Total	17	243	132	210	124	43	31	159	40	102	278	30	1409
08:00 AM	8	69	54	114	38	14	16	64	9	36	53	16	491
08:15 AM	6	93	56	103	46	15	8	59	11	36	69	29	531
08:30 AM	14	78	55	91	50	20	12	64	22	39	71	14	530
08:45 AM	2	66	32	42	32	15	7	62	18	27	62	4	369
Total	30	306	197	350	166	64	43	249	60	138	255	63	1921
*** BREAK ***													
04:30 PM	4	58	42	82	93	14	11	85	14	19	36	4	462
04:45 PM	10	70	45	91	72	16	7	104	21	20	48	7	511
Total	14	128	87	173	165	30	18	189	35	39	84	11	973
05:00 PM	4	58	41	84	73	18	7	80	18	26	42	6	457
05:15 PM	10	57	43	99	97	17	12	97	18	15	53	5	523
05:30 PM	3	73	53	98	106	22	15	95	33	13	43	0	554
05:45 PM	3	58	55	91	105	12	14	95	24	21	42	0	520
Total	20	246	192	372	381	69	48	367	93	75	180	11	2054
06:00 PM	9	59	41	91	105	20	14	78	25	22	50	4	518
06:15 PM	5	52	46	70	99	18	23	72	23	14	50	8	480
Grand Total	95	1034	695	1266	1040	244	177	1114	276	390	897	127	7355
Apprch %	5.2	56.7	38.1	49.6	40.8	9.6	11.3	71.1	17.6	27.6	63.4	9	
Total %	1.3	14.1	9.4	17.2	14.1	3.3	2.4	15.1	3.8	5.3	12.2	1.7	

Transportation Studies, Inc.

2860 Walnut Avenue, Suite C
Tustin, CA. 92780

File Name : H0905040
Site Code : 00000979
Start Date : 5/7/2009
Page No : 2

	MAGNOLIA STREET Southbound				HAMILTON AVENUE Westbound				MAGNOLIA STREET Northbound				HAMILTON AVENUE Eastbound				
Start Time	Right	Thru	Left	App. Total	Right	Thru	Left	App. Total	Right	Thru	Left	App. Total	Right	Thru	Left	App. Total	Int. Total
Peak Hour Analysis From 07:00 AM to 08:45 AM - Peak 1 of 1																	
Peak Hour for Entire Intersection Begins at 07:45 AM																	
07:45 AM	7	63	32	102	60	38	17	115	6	54	14	74	34	**80**	8	122	413
08:00 AM	8	69	54	131	**114**	38	14	**166**	**16**	**64**	9	89	36	53	16	105	491
08:15 AM	6	**93**	**56**	**155**	103	46	15	164	8	59	11	78	36	69	**29**	**134**	**531**
08:30 AM	**14**	78	55	147	91	**50**	**20**	161	12	64	**22**	**98**	**39**	71	14	124	530
Total Volume	35	303	197	535	368	172	66	606	42	241	56	339	145	273	67	485	1965
% App. Total	6.5	56.6	36.8		60.7	28.4	10.9		12.4	71.1	16.5		29.9	56.3	13.8		
PHF	.625	.815	.879	.863	.807	.860	.825	.913	.656	.941	.636	.865	.929	.853	.578	.905	.925

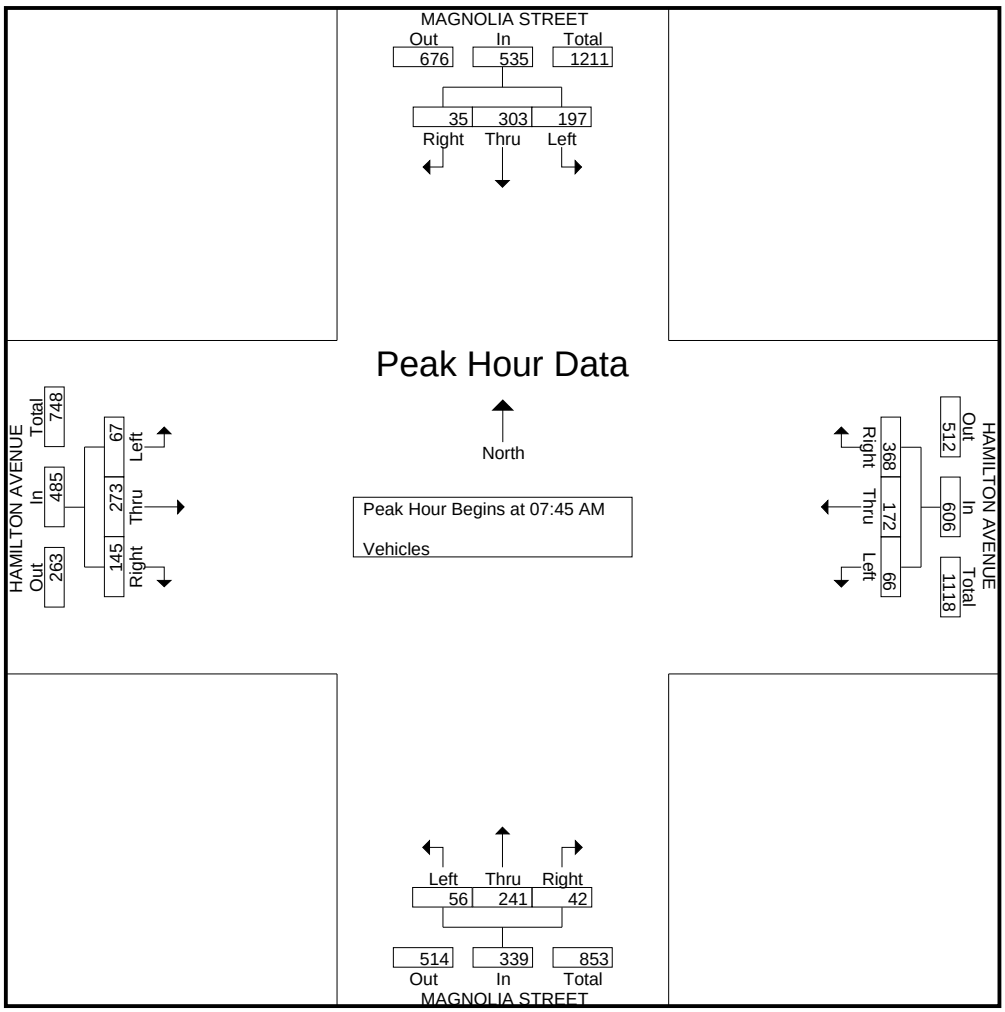

Transportation Studies, Inc.

2860 Walnut Avenue, Suite C
Tustin, CA. 92780

File Name : H0905040
Site Code : 00000979
Start Date : 5/7/2009
Page No : 3

	MAGNOLIA STREET Southbound				HAMILTON AVENUE Westbound				MAGNOLIA STREET Northbound				HAMILTON AVENUE Eastbound				
Start Time	Right	Thru	Left	App. Total	Right	Thru	Left	App. Total	Right	Thru	Left	App. Total	Right	Thru	Left	App. Total	Int. Total
Peak Hour Analysis From 04:30 PM to 06:15 PM - Peak 1 of 1																	
Peak Hour for Entire Intersection Begins at 05:15 PM																	
05:15 PM	**10**	57	43	110	**99**	97	17	213	12	**97**	18	127	15	**53**	**5**	73	523
05:30 PM	3	**73**	53	**129**	98	**106**	**22**	**226**	**15**	95	**33**	**143**	13	43	0	56	**554**
05:45 PM	3	58	**55**	116	91	105	12	208	14	95	24	133	21	42	0	63	520
06:00 PM	9	59	41	109	91	105	20	216	14	78	25	117	**22**	50	4	**76**	518
Total Volume	25	247	192	464	379	413	71	863	55	365	100	520	71	188	9	268	2115
% App. Total	5.4	53.2	41.4		43.9	47.9	8.2		10.6	70.2	19.2		26.5	70.1	3.4		
PHF	.625	.846	.873	.899	.957	.974	.807	.955	.917	.941	.758	.909	.807	.887	.450	.882	.954

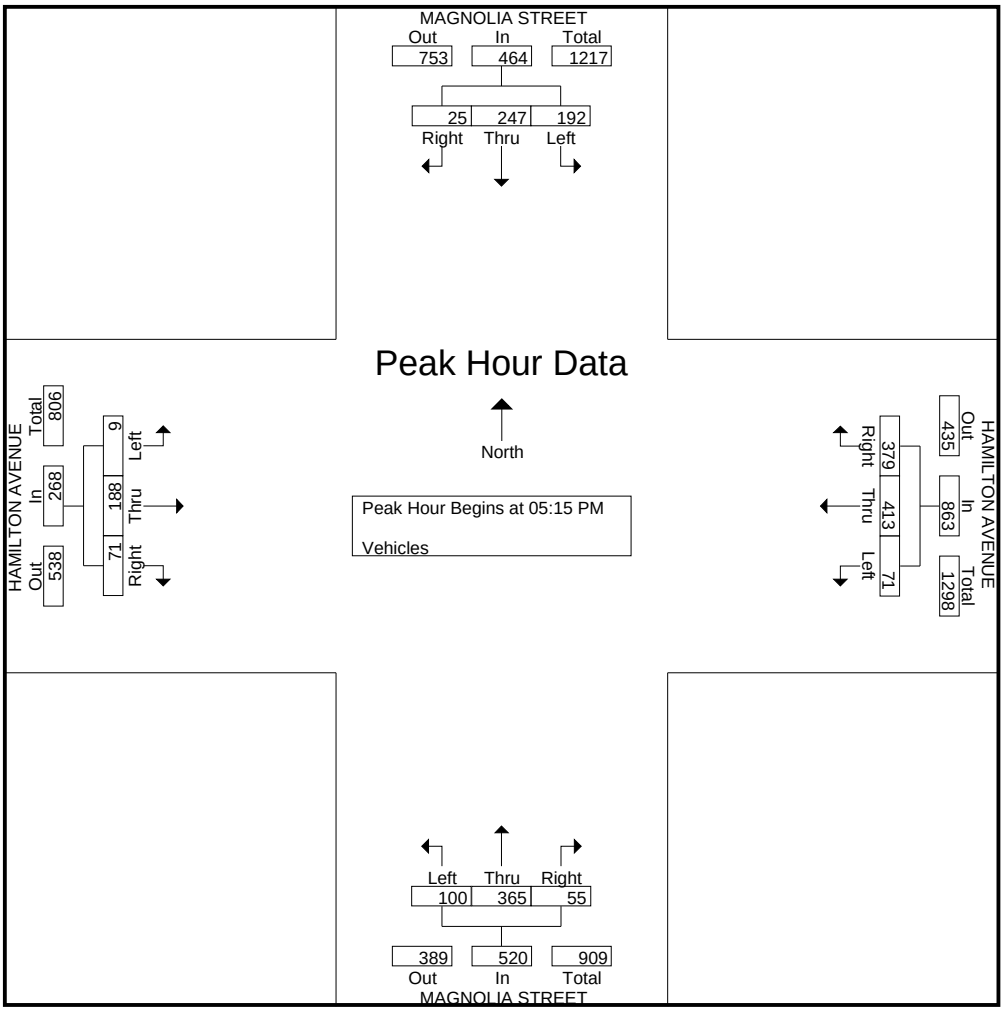

Transportation Studies, Inc.

2860 Walnut Avenue, Suite C
Tustin, CA. 92780

City: HUNTINGTON BEACH
N-S Direction: BUSHARD STREET
E-W Direction: HAMILTON AVENUE

File Name : H0905038
Site Code : 00000000
Start Date : 5/6/2009
Page No : 1

Groups Printed- VEHICLES

	BUSHARD STREET Southbound			HAMILTON AVENUE Westbound			BUSHARD STREET Northbound			HAMILTON AVENUE Eastbound			
Start Time	Right	Thru	Left	Right	Thru	Left	Right	Thru	Left	Right	Thru	Left	Int. Total
Factor	1.0	1.0	1.0	1.0	1.0	1.0	1.0	1.0	1.0	1.0	1.0	1.0	
07:00 AM	11	31	28	19	51	1	11	21	8	5	124	2	312
07:15 AM	2	37	39	18	51	4	11	38	5	3	101	3	312
07:30 AM	13	42	55	20	73	2	15	45	5	9	121	4	404
07:45 AM	24	33	54	29	85	5	8	31	13	6	142	9	439
Total	50	143	176	86	260	12	45	135	31	23	488	18	1467
08:00 AM	49	54	47	22	123	8	11	41	20	7	134	23	539
08:15 AM	48	104	44	30	111	20	12	52	22	9	119	15	586
08:30 AM	24	106	43	13	90	19	20	52	11	11	131	12	532
08:45 AM	6	42	40	11	59	17	14	28	9	7	105	5	343
Total	127	306	174	76	383	64	57	173	62	34	489	55	2000
*** BREAK ***													
04:30 PM	4	42	22	53	152	15	11	53	11	14	93	6	476
04:45 PM	16	37	27	51	174	14	10	48	7	7	93	11	495
Total	20	79	49	104	326	29	21	101	18	21	186	17	971
05:00 PM	7	35	35	75	181	10	15	89	12	7	83	4	553
05:15 PM	10	39	30	54	217	11	6	67	13	16	100	8	571
05:30 PM	10	38	24	67	193	11	7	56	16	13	93	9	537
05:45 PM	12	31	28	55	188	12	15	53	14	7	79	5	499
Total	39	143	117	251	779	44	43	265	55	43	355	26	2160
06:00 PM	8	39	36	59	177	11	10	52	4	7	88	6	497
06:15 PM	7	41	37	62	182	10	9	33	13	10	70	6	480
Grand Total	251	751	589	638	2107	170	185	759	183	138	1676	128	7575
Apprch %	15.8	47.2	37	21.9	72.3	5.8	16.4	67.3	16.2	7.1	86.3	6.6	
Total %	3.3	9.9	7.8	8.4	27.8	2.2	2.4	10	2.4	1.8	22.1	1.7	

Transportation Studies, Inc.

2860 Walnut Avenue, Suite C
Tustin, CA. 92780

File Name : H0905038
Site Code : 00000000
Start Date : 5/6/2009
Page No : 2

	BUSHARD STREET Southbound				HAMILTON AVENUE Westbound				BUSHARD STREET Northbound				HAMILTON AVENUE Eastbound				
Start Time	Right	Thru	Left	App. Total	Right	Thru	Left	App. Total	Right	Thru	Left	App. Total	Right	Thru	Left	App. Total	Int. Total
Peak Hour Analysis From 07:00 AM to 08:45 AM - Peak 1 of 1																	
Peak Hour for Entire Intersection Begins at 07:45 AM																	
07:45 AM	24	33	**54**	111	29	85	5	119	8	31	13	52	6	**142**	9	157	439
08:00 AM	**49**	54	47	150	22	**123**	8	153	11	41	20	72	7	134	**23**	**164**	539
08:15 AM	48	104	44	**196**	**30**	111	**20**	**161**	12	**52**	**22**	**86**	9	119	15	143	**586**
08:30 AM	24	**106**	43	173	13	90	19	122	**20**	52	11	83	**11**	131	12	154	532
Total Volume	145	297	188	630	94	409	52	555	51	176	66	293	33	526	59	618	2096
% App. Total	23	47.1	29.8		16.9	73.7	9.4		17.4	60.1	22.5		5.3	85.1	9.5		
PHF	.740	.700	.870	.804	.783	.831	.650	.862	.638	.846	.750	.852	.750	.926	.641	.942	.894

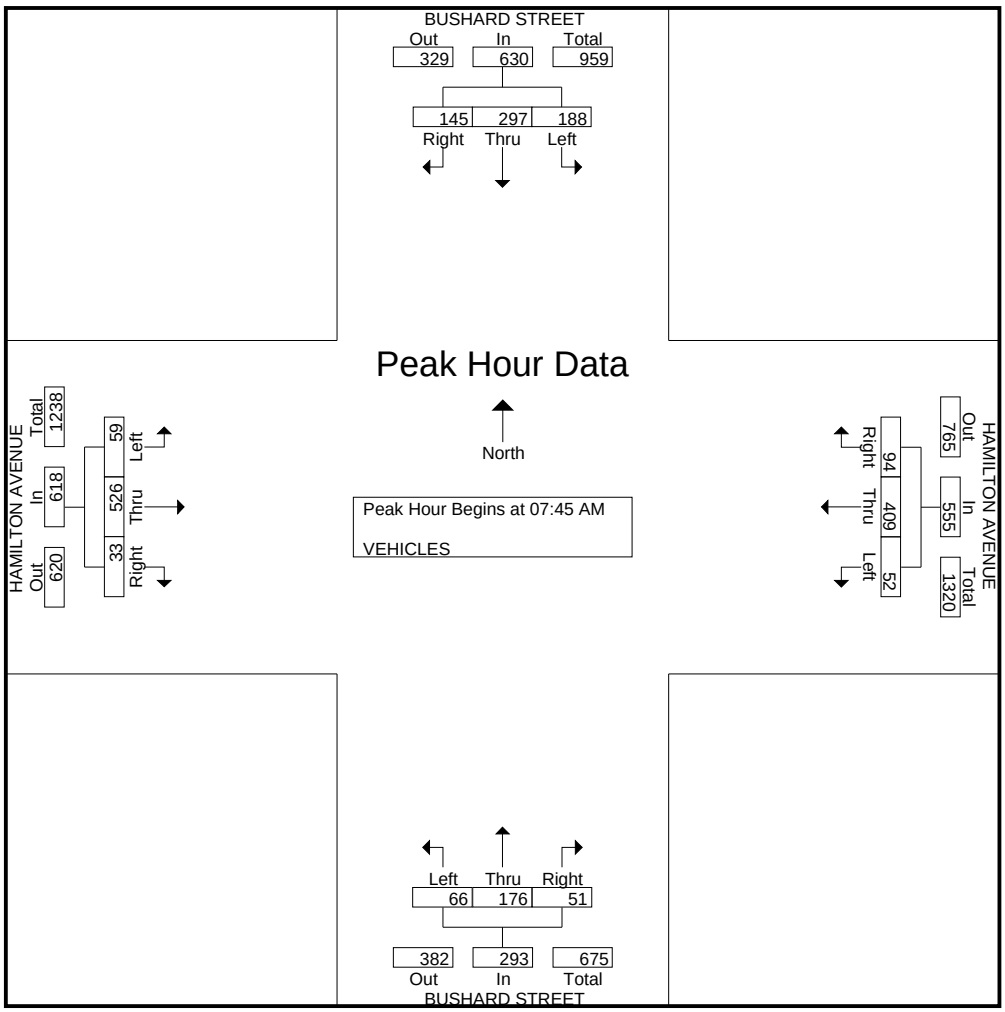

Transportation Studies, Inc.

2860 Walnut Avenue, Suite C
Tustin, CA. 92780

File Name : H0905038
Site Code : 00000000
Start Date : 5/6/2009
Page No : 3

	BUSHARD STREET Southbound				HAMILTON AVENUE Westbound				BUSHARD STREET Northbound				HAMILTON AVENUE Eastbound				
Start Time	Right	Thru	Left	App. Total	Right	Thru	Left	App. Total	Right	Thru	Left	App. Total	Right	Thru	Left	App. Total	Int. Total
Peak Hour Analysis From 04:30 PM to 06:15 PM - Peak 1 of 1																	
Peak Hour for Entire Intersection Begins at 05:00 PM																	
05:00 PM	7	35	**35**	77	**75**	181	10	266	**15**	**89**	12	**116**	7	83	4	94	553
05:15 PM	10	**39**	30	**79**	54	**217**	11	**282**	6	67	13	86	**16**	**100**	8	**124**	**571**
05:30 PM	10	38	24	72	67	193	11	271	7	56	**16**	79	13	93	**9**	115	537
05:45 PM	**12**	31	28	71	55	188	**12**	255	15	53	14	82	7	79	5	91	499
Total Volume	39	143	117	299	251	779	44	1074	43	265	55	363	43	355	26	424	2160
% App. Total	13	47.8	39.1		23.4	72.5	4.1		11.8	73	15.2		10.1	83.7	6.1		
PHF	.813	.917	.836	.946	.837	.897	.917	.952	.717	.744	.859	.782	.672	.888	.722	.855	.946

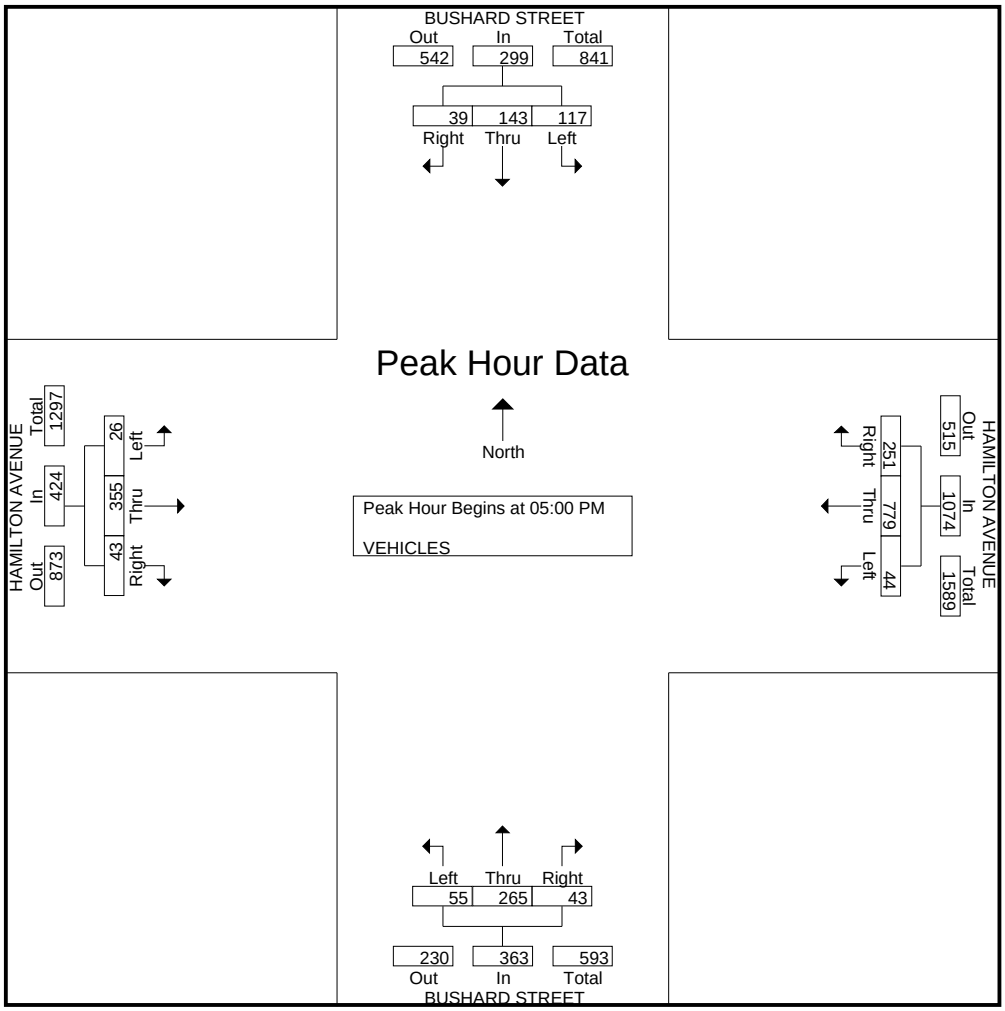

Transportation Studies, Inc.

2860 Walnut Avenue, Suite C
Tustin, CA. 92780

City: HUNTINGTON BEACH
N-S Direction: BROOKHURST STREET
E-W Direction: VICTORIA / HAMILTON

File Name : H0905033
Site Code : 00005062
Start Date : 5/5/2009
Page No : 1

Groups Printed- Vehicles

	BROOKHURST STREET Southbound			VICTORIA STREET Westbound			BROOKHURST STREET Northbound			HAMILTON AVENUE Eastbound			
Start Time	Right	Thru	Left	Right	Thru	Left	Right	Thru	Left	Right	Thru	Left	Int. Total
Factor	1.0	1.0	1.0	1.0	1.0	1.0	1.0	1.0	1.0	1.0	1.0	1.0	
07:00 AM	15	73	99	30	53	22	53	28	6	10	129	12	530
07:15 AM	8	58	105	45	53	33	52	49	6	6	169	23	607
07:30 AM	12	105	121	51	72	22	98	67	7	10	147	16	728
07:45 AM	18	116	104	82	84	34	88	76	8	7	190	22	829
Total	53	352	429	208	262	111	291	220	27	33	635	73	2694
08:00 AM	31	123	147	74	98	26	76	73	16	10	180	22	876
08:15 AM	32	98	110	66	91	29	63	75	23	15	180	23	805
08:30 AM	29	146	140	55	75	35	94	65	12	15	133	28	827
08:45 AM	16	94	118	47	62	34	78	73	10	10	139	22	703
Total	108	461	515	242	326	124	311	286	61	50	632	95	3211
*** BREAK ***													
04:30 PM	22	68	94	119	187	49	53	139	21	13	65	28	858
04:45 PM	21	77	114	110	212	38	54	151	26	21	91	15	930
Total	43	145	208	229	399	87	107	290	47	34	156	43	1788
05:00 PM	24	93	73	114	215	61	49	153	31	20	65	33	931
05:15 PM	22	96	114	134	275	66	52	146	27	8	103	23	1066
05:30 PM	27	86	95	117	207	74	54	152	13	22	81	32	960
05:45 PM	22	84	112	121	236	65	45	123	54	13	83	25	983
Total	95	359	394	486	933	266	200	574	125	63	332	113	3940
06:00 PM	35	69	76	117	225	72	41	160	23	24	86	33	961
06:15 PM	24	47	98	98	208	69	44	112	21	15	86	20	842
Grand Total	358	1433	1720	1380	2353	729	994	1642	304	219	1927	377	13436
Apprch %	10.2	40.8	49	30.9	52.7	16.3	33.8	55.9	10.3	8.7	76.4	14.9	
Total %	2.7	10.7	12.8	10.3	17.5	5.4	7.4	12.2	2.3	1.6	14.3	2.8	

Transportation Studies, Inc.

2860 Walnut Avenue, Suite C
Tustin, CA. 92780

File Name : H0905033
Site Code : 00005062
Start Date : 5/5/2009
Page No : 2

	BROOKHURST STREET Southbound				VICTORIA STREET Westbound				BROOKHURST STREET Northbound				HAMILTON AVENUE Eastbound				
Start Time	Right	Thru	Left	App. Total	Right	Thru	Left	App. Total	Right	Thru	Left	App. Total	Right	Thru	Left	App. Total	Int. Total
Peak Hour Analysis From 07:00 AM to 08:45 AM - Peak 1 of 1																	
Peak Hour for Entire Intersection Begins at 07:45 AM																	
07:45 AM	18	116	104	238	**82**	84	34	**200**	88	**76**	8	**172**	7	**190**	22	**219**	829
08:00 AM	31	123	**147**	301	74	**98**	26	198	76	73	16	165	10	180	22	212	**876**
08:15 AM	**32**	98	110	240	66	91	29	186	63	75	**23**	161	**15**	180	23	218	805
08:30 AM	29	**146**	140	**315**	55	75	**35**	165	**94**	65	12	171	15	133	**28**	176	827
Total Volume	110	483	501	1094	277	348	124	749	321	289	59	669	47	683	95	825	3337
% App. Total	10.1	44.1	45.8		37	46.5	16.6		48	43.2	8.8		5.7	82.8	11.5		
PHF	.859	.827	.852	.868	.845	.888	.886	.936	.854	.951	.641	.972	.783	.899	.848	.942	.952

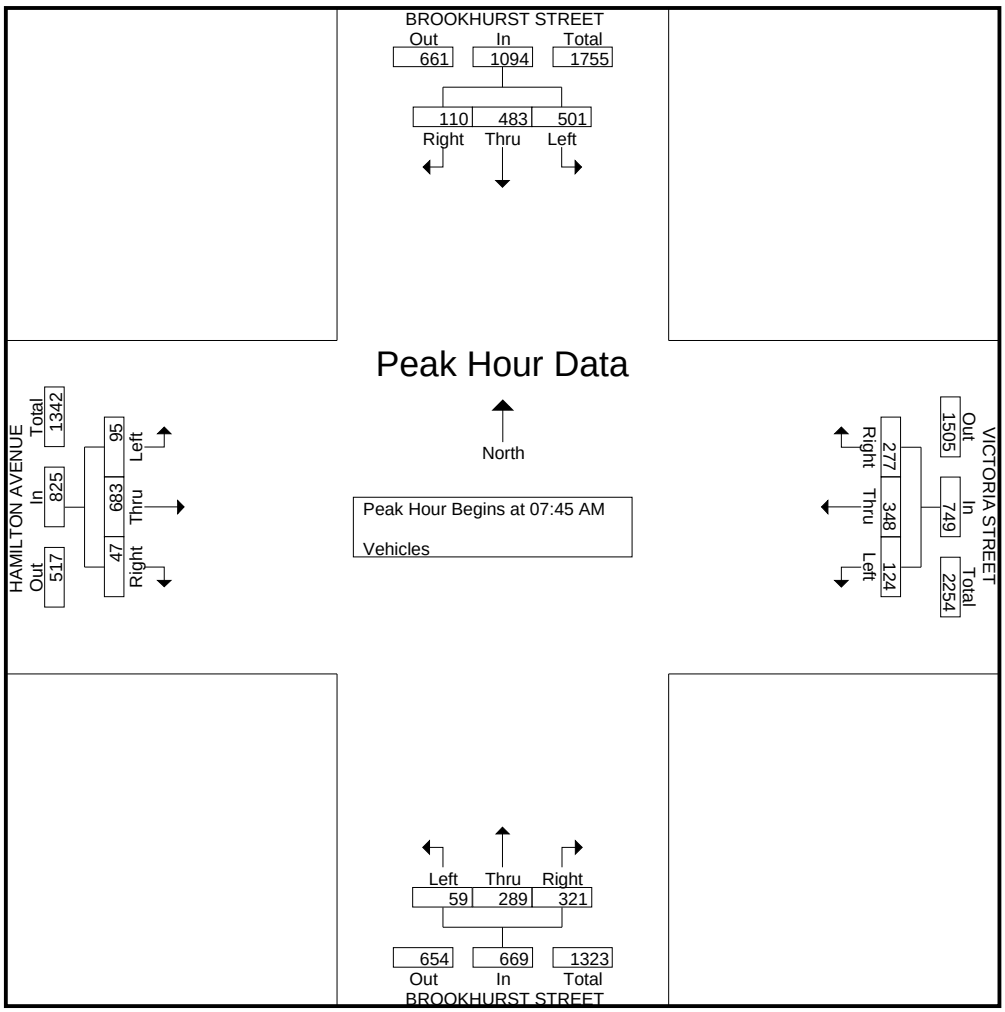

Transportation Studies, Inc.

2860 Walnut Avenue, Suite C
Tustin, CA. 92780

File Name : H0905033
Site Code : 00005062
Start Date : 5/5/2009
Page No : 3

	BROOKHURST STREET Southbound				VICTORIA STREET Westbound				BROOKHURST STREET Northbound				HAMILTON AVENUE Eastbound				
Start Time	Right	Thru	Left	App. Total	Right	Thru	Left	App. Total	Right	Thru	Left	App. Total	Right	Thru	Left	App. Total	Int. Total
Peak Hour Analysis From 04:30 PM to 06:15 PM - Peak 1 of 1																	
Peak Hour for Entire Intersection Begins at 05:15 PM																	
05:15 PM	22	**96**	**114**	**232**	**134**	**275**	66	**475**	52	146	27	**225**	8	**103**	23	134	**1066**
05:30 PM	27	86	95	208	117	207	**74**	398	**54**	152	13	219	22	81	32	135	960
05:45 PM	22	84	112	218	121	236	65	422	45	123	**54**	222	13	83	25	121	983
06:00 PM	**35**	69	76	180	117	225	72	414	41	**160**	23	224	**24**	86	**33**	**143**	961
Total Volume	106	335	397	838	489	943	277	1709	192	581	117	890	67	353	113	533	3970
% App. Total	12.6	40	47.4		28.6	55.2	16.2		21.6	65.3	13.1		12.6	66.2	21.2		
PHF	.757	.872	.871	.903	.912	.857	.936	.899	.889	.908	.542	.989	.698	.857	.856	.932	.931

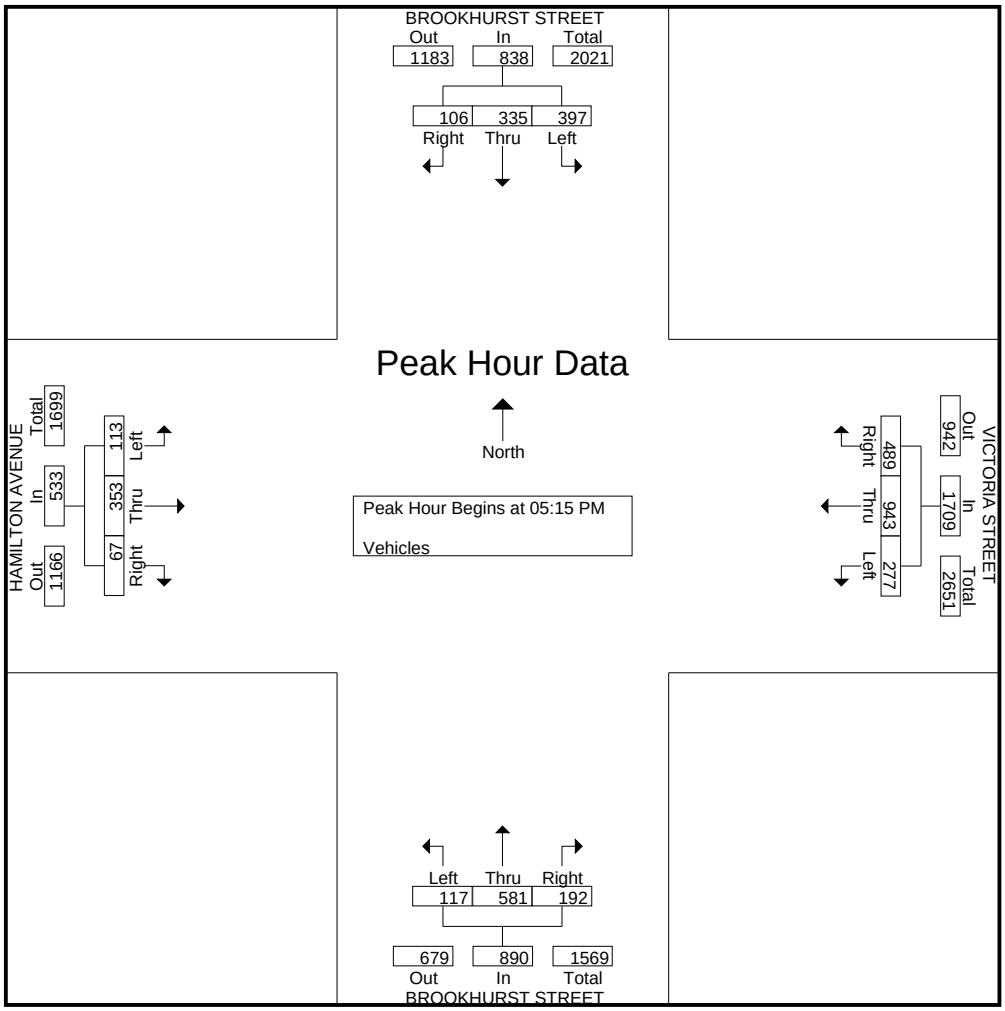

Transportation Studies, Inc.

2860 Walnut Avenue, Suite C
Tustin, CA. 92780

City: HUNTINGTON BEACH
N-S Direction: MAGNOLIA STREET
E-W Direction: BANNING AVENUE

File Name : H0905039
Site Code : 00000979
Start Date : 5/6/2009
Page No : 1

Groups Printed- Vehicles

	MAGNOLIA STREET Southbound			BANNING AVENUE Westbound			MAGNOLIA STREET Northbound			DEAD END Eastbound			
Start Time	Right	Thru	Left	Right	Thru	Left	Right	Thru	Left	Right	Thru	Left	Int. Total
Factor	1.0	1.0	1.0	1.0	1.0	1.0	1.0	1.0	1.0	1.0	1.0	1.0	
07:00 AM	0	72	7	19	0	18	4	28	0	0	0	0	148
07:15 AM	0	98	7	17	0	10	3	37	0	0	0	0	172
07:30 AM	0	73	4	21	0	11	8	36	0	0	0	0	153
07:45 AM	0	104	8	23	0	8	6	44	0	0	0	0	193
Total	0	347	26	80	0	47	21	145	0	0	0	0	666
08:00 AM	0	97	18	20	0	13	8	40	0	0	0	0	196
08:15 AM	0	86	25	21	0	17	9	62	0	0	0	0	220
08:30 AM	0	89	31	48	0	24	14	51	0	0	0	0	257
08:45 AM	0	71	22	27	0	21	9	28	0	0	0	0	178
Total	0	343	96	116	0	75	40	181	0	0	0	0	851
*** BREAK ***													
04:30 PM	0	52	13	17	0	10	11	109	0	0	0	0	212
04:45 PM	0	66	20	9	0	12	9	104	0	0	0	0	220
Total	0	118	33	26	0	22	20	213	0	0	0	0	432
05:00 PM	0	76	22	10	0	5	15	96	0	0	0	0	224
05:15 PM	0	67	12	15	0	6	16	110	0	0	0	0	226
05:30 PM	0	80	21	16	0	4	14	105	0	0	0	0	240
05:45 PM	0	77	21	15	0	8	15	124	0	0	0	0	260
Total	0	300	76	56	0	23	60	435	0	0	0	0	950
06:00 PM	0	67	15	14	0	7	12	91	0	0	0	0	206
06:15 PM	0	69	18	12	0	7	19	84	0	0	0	0	209
Grand Total	0	1244	264	304	0	181	172	1149	0	0	0	0	3314
Apprch %	0	82.5	17.5	62.7	0	37.3	13	87	0	0	0	0	
Total %	0	37.5	8	9.2	0	5.5	5.2	34.7	0	0	0	0	

Transportation Studies, Inc.

2860 Walnut Avenue, Suite C
Tustin, CA. 92780

File Name : H0905039
Site Code : 00000979
Start Date : 5/6/2009
Page No : 2

	MAGNOLIA STREET Southbound				BANNING AVENUE Westbound				MAGNOLIA STREET Northbound				DEAD END Eastbound				
Start Time	Right	Thru	Left	App. Total	Right	Thru	Left	App. Total	Right	Thru	Left	App. Total	Right	Thru	Left	App. Total	Int. Total
Peak Hour Analysis From 07:00 AM to 08:45 AM - Peak 1 of 1																	
Peak Hour for Entire Intersection Begins at 07:45 AM																	
07:45 AM	0	**104**	8	112	23	0	8	31	6	44	0	50	0	0	0	0	193
08:00 AM	0	97	18	115	20	0	13	33	8	40	0	48	0	0	0	0	196
08:15 AM	0	86	25	111	21	0	17	38	9	**62**	0	**71**	0	0	0	0	220
08:30 AM	0	89	**31**	**120**	**48**	0	**24**	**72**	**14**	51	0	65	0	0	0	0	**257**
Total Volume	0	376	82	458	112	0	62	174	37	197	0	234	0	0	0	0	866
% App. Total	0	82.1	17.9		64.4	0	35.6		15.8	84.2	0		0	0	0		
PHF	.000	.904	.661	.954	.583	.000	.646	.604	.661	.794	.000	.824	.000	.000	.000	.000	.842

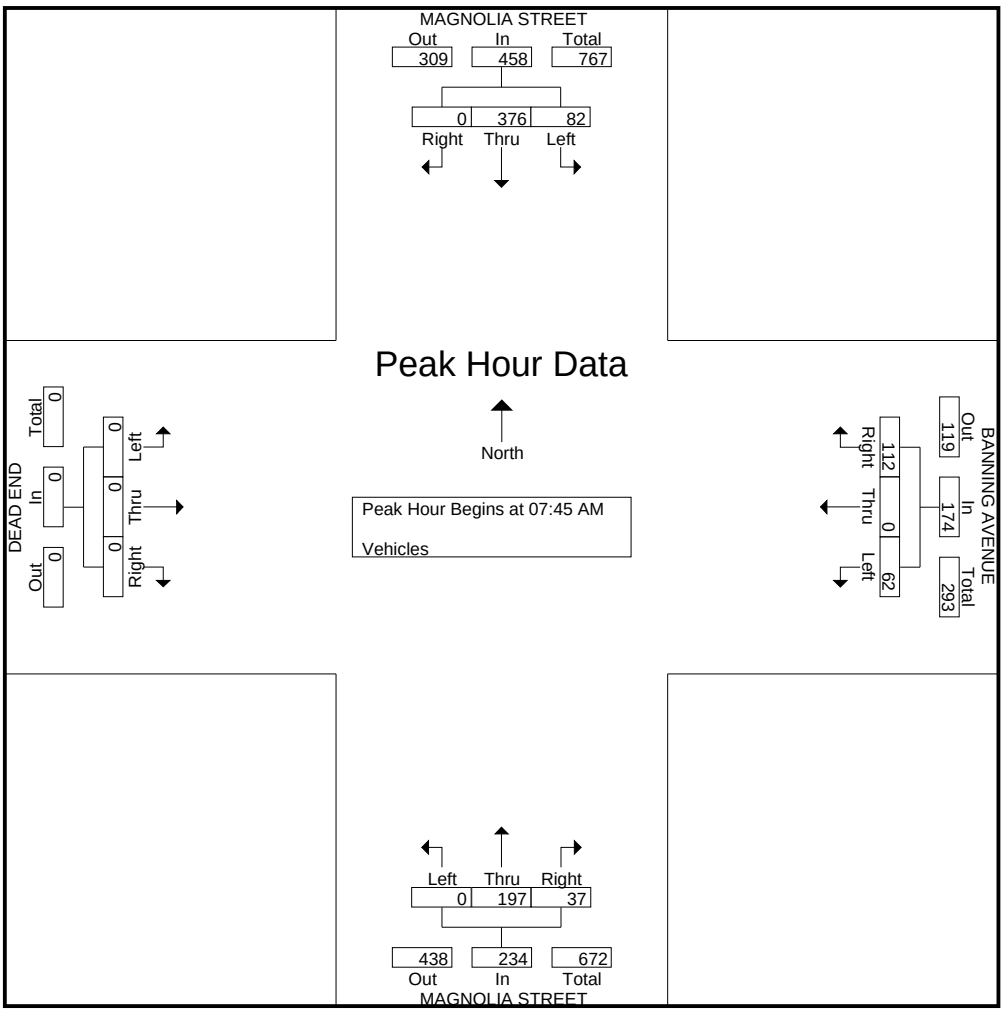

Transportation Studies, Inc.

2860 Walnut Avenue, Suite C
Tustin, CA. 92780

File Name : H0905039
Site Code : 00000979
Start Date : 5/6/2009
Page No : 3

	MAGNOLIA STREET Southbound				BANNING AVENUE Westbound				MAGNOLIA STREET Northbound				DEAD END Eastbound				
Start Time	Right	Thru	Left	App. Total	Right	Thru	Left	App. Total	Right	Thru	Left	App. Total	Right	Thru	Left	App. Total	Int. Total
Peak Hour Analysis From 04:30 PM to 06:15 PM - Peak 1 of 1																	
Peak Hour for Entire Intersection Begins at 05:00 PM																	
05:00 PM	0	76	**22**	98	10	0	5	15	15	96	0	111	0	0	0	0	224
05:15 PM	0	67	12	79	15	0	6	21	**16**	110	0	126	0	0	0	0	226
05:30 PM	0	**80**	21	**101**	**16**	0	4	20	14	105	0	119	0	0	0	0	240
05:45 PM	0	77	21	98	15	0	**8**	**23**	15	**124**	0	**139**	0	0	0	0	**260**
Total Volume	0	300	76	376	56	0	23	79	60	435	0	495	0	0	0	0	950
% App. Total	0	79.8	20.2		70.9	0	29.1		12.1	87.9	0		0	0	0		
PHF	.000	.938	.864	.931	.875	.000	.719	.859	.938	.877	.000	.890	.000	.000	.000	.000	.913

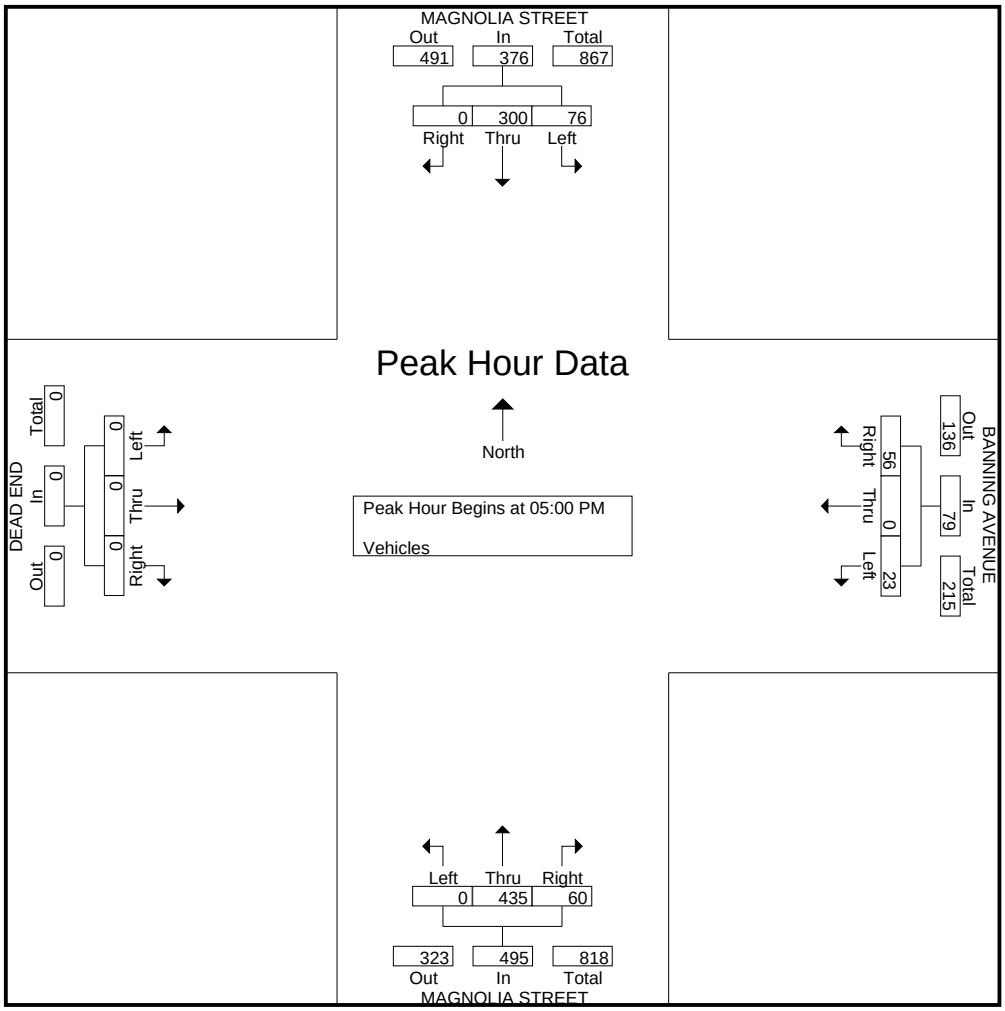

Transportation Studies, Inc.

2860 Walnut Avenue, Suite C
Tustin, CA. 92780

City: HUNTINGTON BEACH
N-S Direction: BUSHARD STREET
E-W Direction: BANNING AVENUE

File Name : H0905037
Site Code : 00000979
Start Date : 5/5/2009
Page No : 1

Groups Printed- Vehicles

	BUSHARD STREET Southbound			BANNING AVENUE Westbound			BUSHARD STREET Northbound			BANNING AVENUE Eastbound			
Start Time	Right	Thru	Left	Right	Thru	Left	Right	Thru	Left	Right	Thru	Left	Int. Total
Factor	1.0	1.0	1.0	1.0	1.0	1.0	1.0	1.0	1.0	1.0	1.0	1.0	
07:00 AM	12	25	2	2	10	1	4	14	0	3	9	5	87
07:15 AM	8	37	2	3	7	4	6	14	0	4	18	7	110
07:30 AM	6	45	1	4	14	1	2	24	3	5	16	6	127
07:45 AM	6	37	2	4	10	4	3	27	5	7	6	6	117
Total	32	144	7	13	41	10	15	79	8	19	49	24	441
08:00 AM	9	55	6	7	16	2	3	28	6	6	14	10	162
08:15 AM	34	59	4	5	33	2	3	26	4	7	22	11	210
08:30 AM	62	65	4	5	52	1	8	13	2	6	27	15	260
08:45 AM	16	41	2	2	13	2	1	19	2	9	21	17	145
Total	121	220	16	19	114	7	15	86	14	28	84	53	777
*** BREAK ***													
04:30 PM	13	30	5	8	7	5	4	49	7	3	17	6	154
04:45 PM	10	31	2	3	14	6	4	39	3	2	11	7	132
Total	23	61	7	11	21	11	8	88	10	5	28	13	286
05:00 PM	4	32	2	5	18	5	10	52	7	3	17	7	162
05:15 PM	11	23	3	5	11	8	5	73	11	2	7	5	164
05:30 PM	3	29	0	5	14	4	5	41	3	4	10	7	125
05:45 PM	7	27	2	1	12	7	1	35	8	0	12	3	115
Total	25	111	7	16	55	24	21	201	29	9	46	22	566
06:00 PM	10	28	1	3	18	5	2	34	4	3	9	7	124
06:15 PM	11	30	9	6	15	6	4	46	4	4	16	9	160
Grand Total	222	594	47	68	264	63	65	534	69	68	232	128	2354
Apprch %	25.7	68.8	5.4	17.2	66.8	15.9	9.7	79.9	10.3	15.9	54.2	29.9	
Total %	9.4	25.2	2	2.9	11.2	2.7	2.8	22.7	2.9	2.9	9.9	5.4	

Transportation Studies, Inc.

2860 Walnut Avenue, Suite C
Tustin, CA. 92780

File Name : H0905037
Site Code : 00000979
Start Date : 5/5/2009
Page No : 2

	BUSHARD STREET Southbound				BANNING AVENUE Westbound				BUSHARD STREET Northbound				BANNING AVENUE Eastbound				
Start Time	Right	Thru	Left	App. Total	Right	Thru	Left	App. Total	Right	Thru	Left	App. Total	Right	Thru	Left	App. Total	Int. Total
Peak Hour Analysis From 07:00 AM to 08:45 AM - Peak 1 of 1																	
Peak Hour for Entire Intersection Begins at 08:00 AM																	
08:00 AM	9	55	**6**	70	**7**	16	**2**	25	3	**28**	**6**	**37**	6	14	10	30	162
08:15 AM	34	59	4	97	5	33	2	40	3	26	4	33	7	22	11	40	210
08:30 AM	**62**	**65**	4	**131**	5	**52**	1	**58**	**8**	13	2	23	6	**27**	15	**48**	**260**
08:45 AM	16	41	2	59	2	13	2	17	1	19	2	22	**9**	21	**17**	47	145
Total Volume	121	220	16	357	19	114	7	140	15	86	14	115	28	84	53	165	777
% App. Total	33.9	61.6	4.5		13.6	81.4	5		13	74.8	12.2		17	50.9	32.1		
PHF	.488	.846	.667	.681	.679	.548	.875	.603	.469	.768	.583	.777	.778	.778	.779	.859	.747

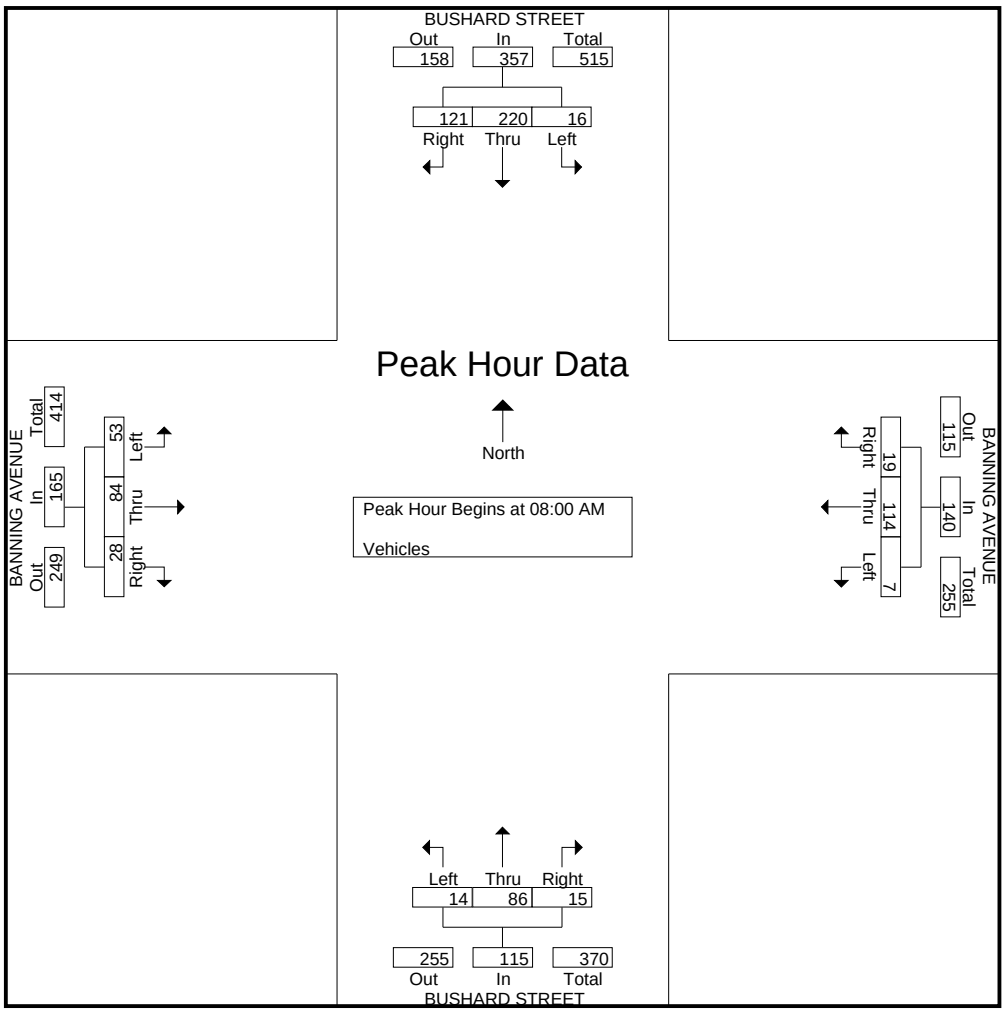

Transportation Studies, Inc.

2860 Walnut Avenue, Suite C
Tustin, CA. 92780

File Name : H0905037
Site Code : 00000979
Start Date : 5/5/2009
Page No : 3

	BUSHARD STREET Southbound				BANNING AVENUE Westbound				BUSHARD STREET Northbound				BANNING AVENUE Eastbound				
Start Time	Right	Thru	Left	App. Total	Right	Thru	Left	App. Total	Right	Thru	Left	App. Total	Right	Thru	Left	App. Total	Int. Total
Peak Hour Analysis From 04:30 PM to 06:15 PM - Peak 1 of 1																	
Peak Hour for Entire Intersection Begins at 04:30 PM																	
04:30 PM	**13**	30	**5**	**48**	**8**	7	5	20	4	49	7	60	**3**	**17**	6	26	154
04:45 PM	10	31	2	43	3	14	6	23	4	39	3	46	2	11	**7**	20	132
05:00 PM	4	**32**	2	38	5	**18**	5	**28**	**10**	52	7	69	3	17	7	**27**	162
05:15 PM	11	23	3	37	5	11	**8**	24	5	**73**	**11**	**89**	2	7	5	14	**164**
Total Volume	38	116	12	166	21	50	24	95	23	213	28	264	10	52	25	87	612
% App. Total	22.9	69.9	7.2		22.1	52.6	25.3		8.7	80.7	10.6		11.5	59.8	28.7		
PHF	.731	.906	.600	.865	.656	.694	.750	.848	.575	.729	.636	.742	.833	.765	.893	.806	.933

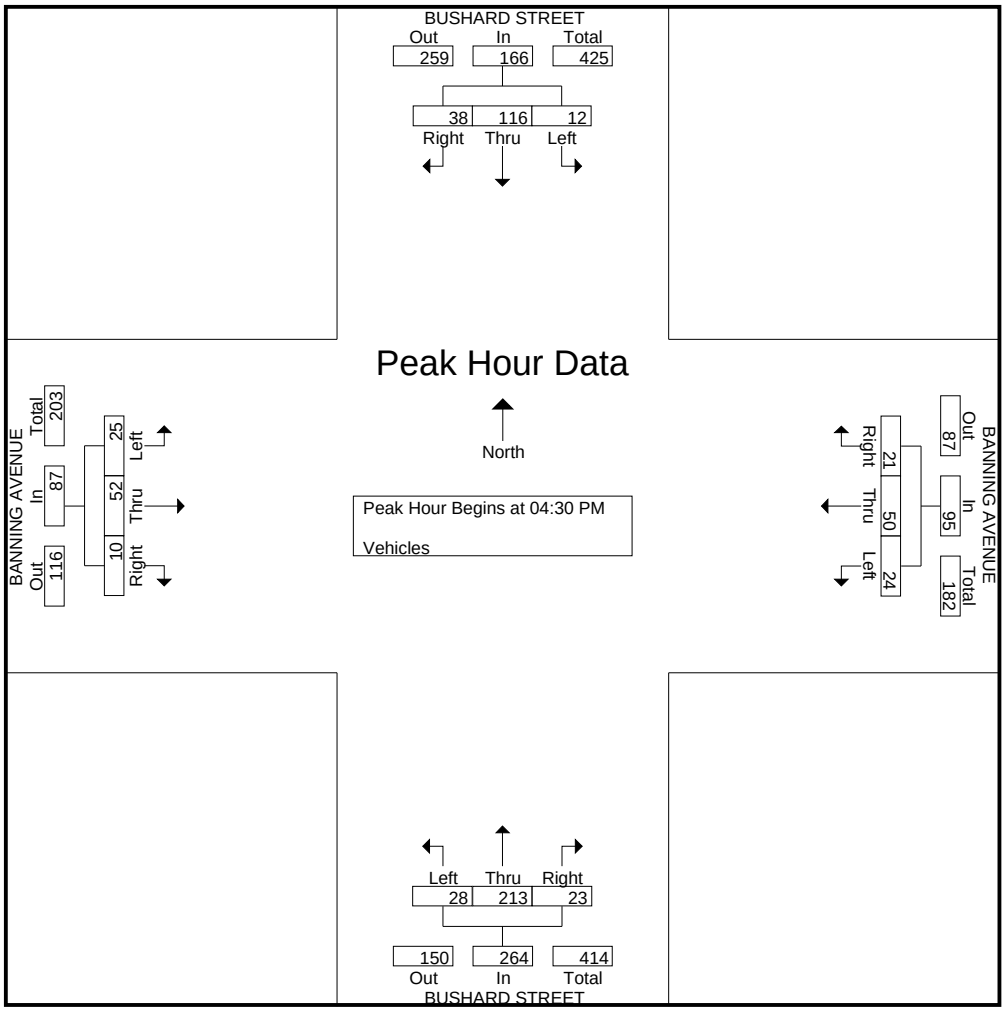

Transportation Studies, Inc.

2860 Walnut Avenue, Suite C
Tustin, CA. 92780

City: HUNTINGTON BEACH
N-S Direction: BROOKHURST STREET
E-W Direction: BANNING AVENUE

File Name : H0905034
Site Code : 00000092
Start Date : 5/7/2009
Page No : 1

Groups Printed- Vehicles

	BROOKHURST STREET Southbound			DEAD END Westbound			BROOKHURST STREET Northbound			BANNING AVENUE Eastbound			
Start Time	Right	Thru	Left	Right	Thru	Left	Right	Thru	Left	Right	Thru	Left	Int. Total
Factor	1.0	1.0	1.0	1.0	1.0	1.0	1.0	1.0	1.0	1.0	1.0	1.0	
07:00 AM	12	91	0	0	0	0	0	68	0	2	0	22	195
07:15 AM	9	107	0	0	0	0	0	98	1	2	0	31	248
07:30 AM	6	140	0	0	0	0	0	106	0	1	0	29	282
07:45 AM	18	129	0	0	0	0	0	132	1	2	0	14	296
Total	45	467	0	0	0	0	0	404	2	7	0	96	1021
08:00 AM	15	134	0	0	0	0	0	128	1	2	0	21	301
08:15 AM	31	139	0	0	0	0	0	124	0	4	0	24	322
08:30 AM	38	133	0	0	0	0	0	93	5	6	0	67	342
08:45 AM	9	119	0	0	0	0	0	100	0	2	0	22	252
Total	93	525	0	0	0	0	0	445	6	14	0	134	1217
*** BREAK ***													
04:30 PM	24	107	0	0	0	0	0	194	4	2	0	21	352
04:45 PM	20	107	0	0	0	0	0	168	2	1	0	15	313
Total	44	214	0	0	0	0	0	362	6	3	0	36	665
05:00 PM	22	127	0	0	0	0	0	203	2	1	0	14	369
05:15 PM	27	117	0	0	0	0	0	181	3	2	0	12	342
05:30 PM	24	151	0	0	0	0	0	205	5	3	0	15	403
05:45 PM	27	114	0	0	0	0	0	180	2	1	0	20	344
Total	100	509	0	0	0	0	0	769	12	7	0	61	1458
06:00 PM	13	97	0	0	0	0	0	168	1	3	0	19	301
06:15 PM	23	109	0	0	0	0	0	159	1	1	0	15	308
Grand Total	318	1921	0	0	0	0	0	2307	28	35	0	361	4970
Apprch %	14.2	85.8	0	0	0	0	0	98.8	1.2	8.8	0	91.2	
Total %	6.4	38.7	0	0	0	0	0	46.4	0.6	0.7	0	7.3	

Transportation Studies, Inc.

2860 Walnut Avenue, Suite C
Tustin, CA. 92780

File Name : H0905034
Site Code : 00000092
Start Date : 5/7/2009
Page No : 2

	BROOKHURST STREET Southbound				DEAD END Westbound				BROOKHURST STREET Northbound				BANNING AVENUE Eastbound				
Start Time	Right	Thru	Left	App. Total	Right	Thru	Left	App. Total	Right	Thru	Left	App. Total	Right	Thru	Left	App. Total	Int. Total
Peak Hour Analysis From 07:00 AM to 08:45 AM - Peak 1 of 1																	
Peak Hour for Entire Intersection Begins at 07:45 AM																	
07:45 AM	18	129	0	147	0	0	0	0	0	**132**	1	**133**	2	0	14	16	296
08:00 AM	15	134	0	149	0	0	0	0	0	128	1	129	2	0	21	23	301
08:15 AM	31	**139**	0	170	0	0	0	0	0	124	0	124	4	0	24	28	322
08:30 AM	**38**	133	0	**171**	0	0	0	0	0	93	**5**	98	**6**	0	**67**	**73**	**342**
Total Volume	102	535	0	637	0	0	0	0	0	477	7	484	14	0	126	140	1261
% App. Total	16	84	0		0	0	0		0	98.6	1.4		10	0	90		
PHF	.671	.962	.000	.931	.000	.000	.000	.000	.000	.903	.350	.910	.583	.000	.470	.479	.922

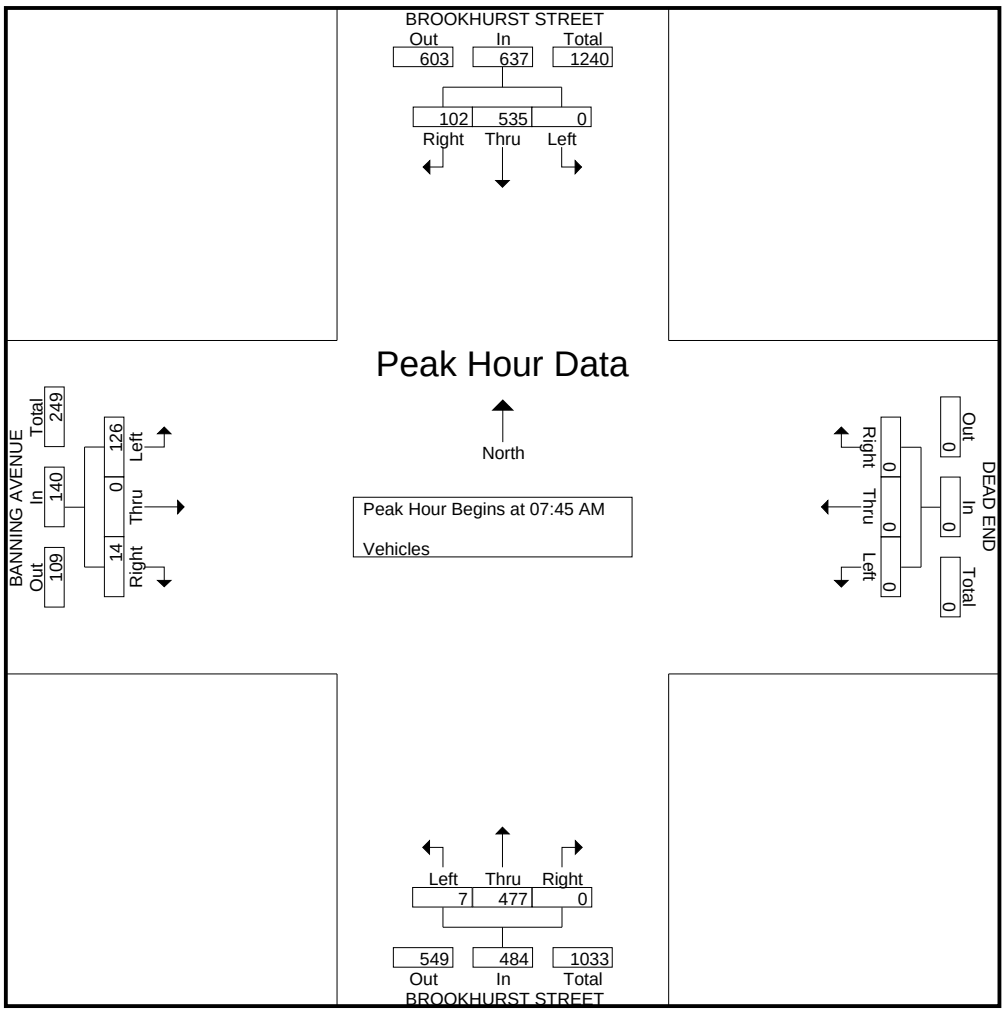

Transportation Studies, Inc.

2860 Walnut Avenue, Suite C
Tustin, CA. 92780

File Name : H0905034
Site Code : 00000092
Start Date : 5/7/2009
Page No : 3

	BROOKHURST STREET Southbound				DEAD END Westbound				BROOKHURST STREET Northbound				BANNING AVENUE Eastbound				
Start Time	Right	Thru	Left	App. Total	Right	Thru	Left	App. Total	Right	Thru	Left	App. Total	Right	Thru	Left	App. Total	Int. Total
Peak Hour Analysis From 04:30 PM to 06:15 PM - Peak 1 of 1																	
Peak Hour for Entire Intersection Begins at 05:00 PM																	
05:00 PM	22	127	0	149	0	0	0	0	0	203	2	205	1	0	14	15	369
05:15 PM	**27**	117	0	144	0	0	0	0	0	181	3	184	2	0	12	14	342
05:30 PM	24	**151**	0	**175**	0	0	0	0	0	**205**	**5**	**210**	**3**	0	15	18	**403**
05:45 PM	27	114	0	141	0	0	0	0	0	180	2	182	1	0	**20**	**21**	344
Total Volume	100	509	0	609	0	0	0	0	0	769	12	781	7	0	61	68	1458
% App. Total	16.4	83.6	0		0	0	0		0	98.5	1.5		10.3	0	89.7		
PHF	.926	.843	.000	.870	.000	.000	.000	.000	.000	.938	.600	.930	.583	.000	.763	.810	.904

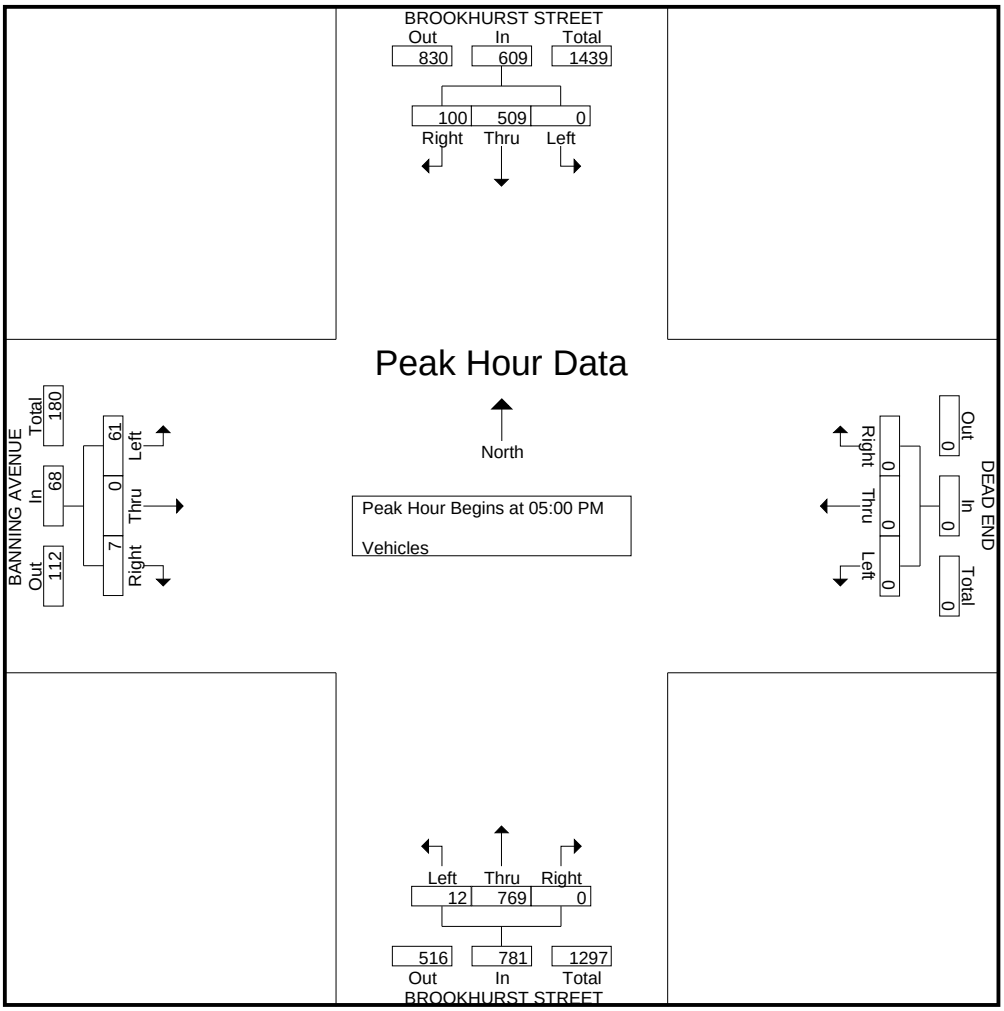

Transportation Studies, Inc.

2860 Walnut Avenue, Suite C
Tustin, CA. 92780

City: HUNTINGTON BEACH
N-S Direction: MAGNOLIA STREET
E-W Direction: PACIFIC COAST HIGHWAY

File Name : H0905035
Site Code : 00005062
Start Date : 5/7/2009
Page No : 1

Groups Printed- Vehicles

	MAGNOLIA STREET Southbound			PACIFIC COAST HIGHWAY Westbound			MAGNOLIA STREET Northbound			PACIFIC COAST HIGHWAY Eastbound			
Start Time	Right	Thru	Left	Right	Thru	Left	Right	Thru	Left	Right	Thru	Left	Int. Total
Factor	1.0	1.0	1.0	1.0	1.0	1.0	1.0	1.0	1.0	1.0	1.0	1.0	
07:00 AM	34	15	27	3	93	1	0	6	1	6	218	20	424
07:15 AM	28	7	49	21	140	2	2	5	1	1	350	13	619
07:30 AM	29	5	56	18	134	4	1	3	4	4	372	21	651
07:45 AM	24	8	57	11	156	2	3	8	1	2	486	24	782
Total	115	35	189	53	523	9	6	22	7	13	1426	78	2476
08:00 AM	38	8	52	13	167	5	1	4	1	4	351	27	671
08:15 AM	37	11	67	19	159	4	0	4	0	6	394	35	736
08:30 AM	38	14	56	7	132	7	3	8	1	5	376	30	677
08:45 AM	52	6	65	14	198	6	1	3	2	1	381	29	758
Total	165	39	240	53	656	22	5	19	4	16	1502	121	2842
*** BREAK ***													
04:30 PM	29	7	24	46	369	1	1	4	3	7	204	39	734
04:45 PM	32	6	34	47	383	7	3	8	1	6	217	22	766
Total	61	13	58	93	752	8	4	12	4	13	421	61	1500
05:00 PM	43	9	28	58	373	15	4	8	2	3	230	38	811
05:15 PM	39	9	26	94	455	1	3	4	3	2	249	32	917
05:30 PM	39	5	22	73	468	7	6	4	0	7	208	37	876
05:45 PM	31	7	25	70	410	7	2	6	5	5	198	30	796
Total	152	30	101	295	1706	30	15	22	10	17	885	137	3400
06:00 PM	41	6	27	53	337	0	5	7	1	3	243	29	752
06:15 PM	24	6	27	51	374	4	1	7	3	1	179	39	716
Grand Total	558	129	642	598	4348	73	36	89	29	63	4656	465	11686
Apprch %	42	9.7	48.3	11.9	86.6	1.5	23.4	57.8	18.8	1.2	89.8	9	
Total %	4.8	1.1	5.5	5.1	37.2	0.6	0.3	0.8	0.2	0.5	39.8	4	

Transportation Studies, Inc.

2860 Walnut Avenue, Suite C
Tustin, CA. 92780

File Name : H0905035
Site Code : 00005062
Start Date : 5/7/2009
Page No : 2

	MAGNOLIA STREET Southbound				PACIFIC COAST HIGHWAY Westbound				MAGNOLIA STREET Northbound				PACIFIC COAST HIGHWAY Eastbound				
Start Time	Right	Thru	Left	App. Total	Right	Thru	Left	App. Total	Right	Thru	Left	App. Total	Right	Thru	Left	App. Total	Int. Total
Peak Hour Analysis From 07:00 AM to 08:45 AM - Peak 1 of 1																	
Peak Hour for Entire Intersection Begins at 07:45 AM																	
07:45 AM	24	8	57	89	11	156	2	169	**3**	**8**	**1**	**12**	2	**486**	24	**512**	**782**
08:00 AM	**38**	8	52	98	13	**167**	5	**185**	1	4	1	6	4	351	27	382	671
08:15 AM	37	11	**67**	**115**	**19**	159	4	182	0	4	0	4	**6**	394	**35**	435	736
08:30 AM	38	**14**	56	108	7	132	**7**	146	3	8	1	12	5	376	30	411	677
Total Volume	137	41	232	410	50	614	18	682	7	24	3	34	17	1607	116	1740	2866
% App. Total	33.4	10	56.6		7.3	90	2.6		20.6	70.6	8.8		1	92.4	6.7		
PHF	.901	.732	.866	.891	.658	.919	.643	.922	.583	.750	.750	.708	.708	.827	.829	.850	.916

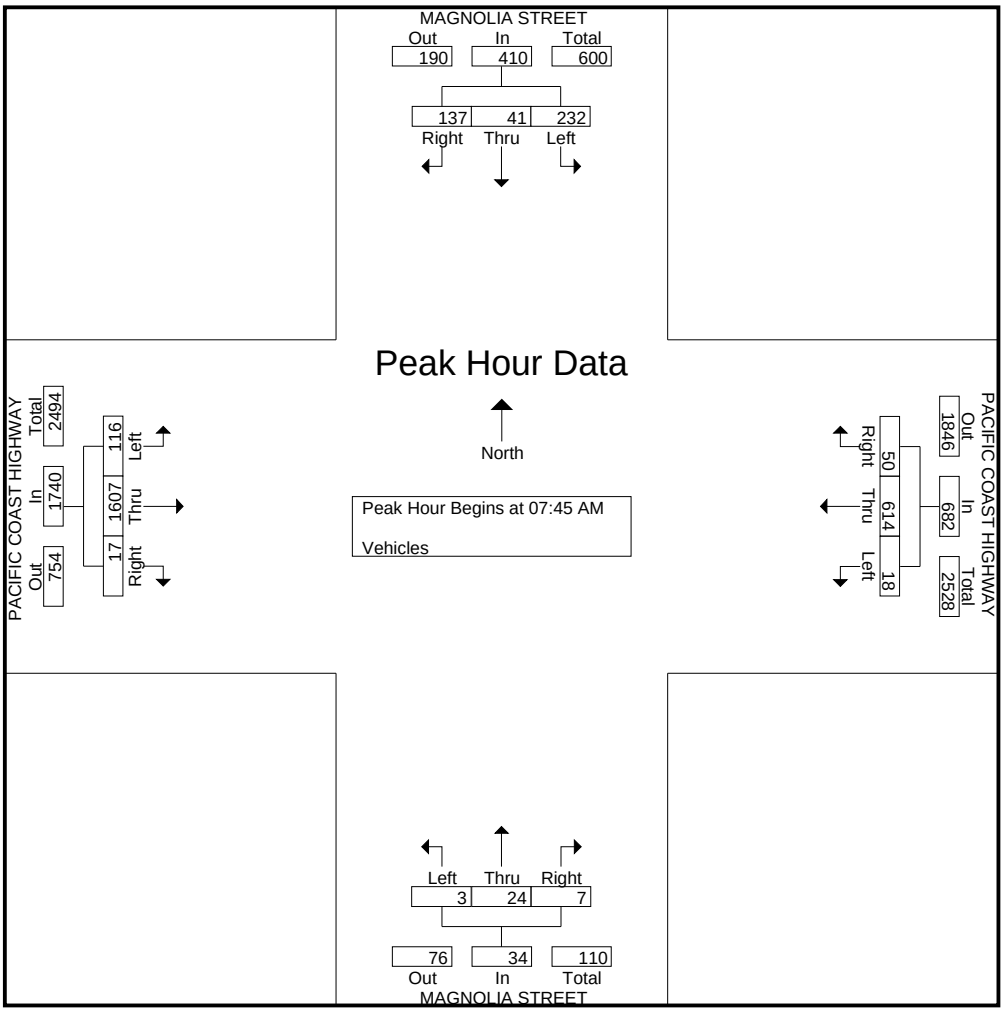

Transportation Studies, Inc.

2860 Walnut Avenue, Suite C
Tustin, CA. 92780

File Name : H0905035
Site Code : 00005062
Start Date : 5/7/2009
Page No : 3

	MAGNOLIA STREET Southbound				PACIFIC COAST HIGHWAY Westbound				MAGNOLIA STREET Northbound				PACIFIC COAST HIGHWAY Eastbound				
Start Time	Right	Thru	Left	App. Total	Right	Thru	Left	App. Total	Right	Thru	Left	App. Total	Right	Thru	Left	App. Total	Int. Total
Peak Hour Analysis From 04:30 PM to 06:15 PM - Peak 1 of 1																	
Peak Hour for Entire Intersection Begins at 05:00 PM																	
05:00 PM	**43**	**9**	**28**	**80**	58	373	**15**	446	4	**8**	2	**14**	3	230	**38**	271	811
05:15 PM	39	9	26	74	**94**	455	1	**550**	3	4	3	10	2	**249**	32	**283**	**917**
05:30 PM	39	5	22	66	73	**468**	7	548	**6**	4	0	10	**7**	208	37	252	876
05:45 PM	31	7	25	63	70	410	7	487	2	6	**5**	13	5	198	30	233	796
Total Volume	152	30	101	283	295	1706	30	2031	15	22	10	47	17	885	137	1039	3400
% App. Total	53.7	10.6	35.7		14.5	84	1.5		31.9	46.8	21.3		1.6	85.2	13.2		
PHF	.884	.833	.902	.884	.785	.911	.500	.923	.625	.688	.500	.839	.607	.889	.901	.918	.927

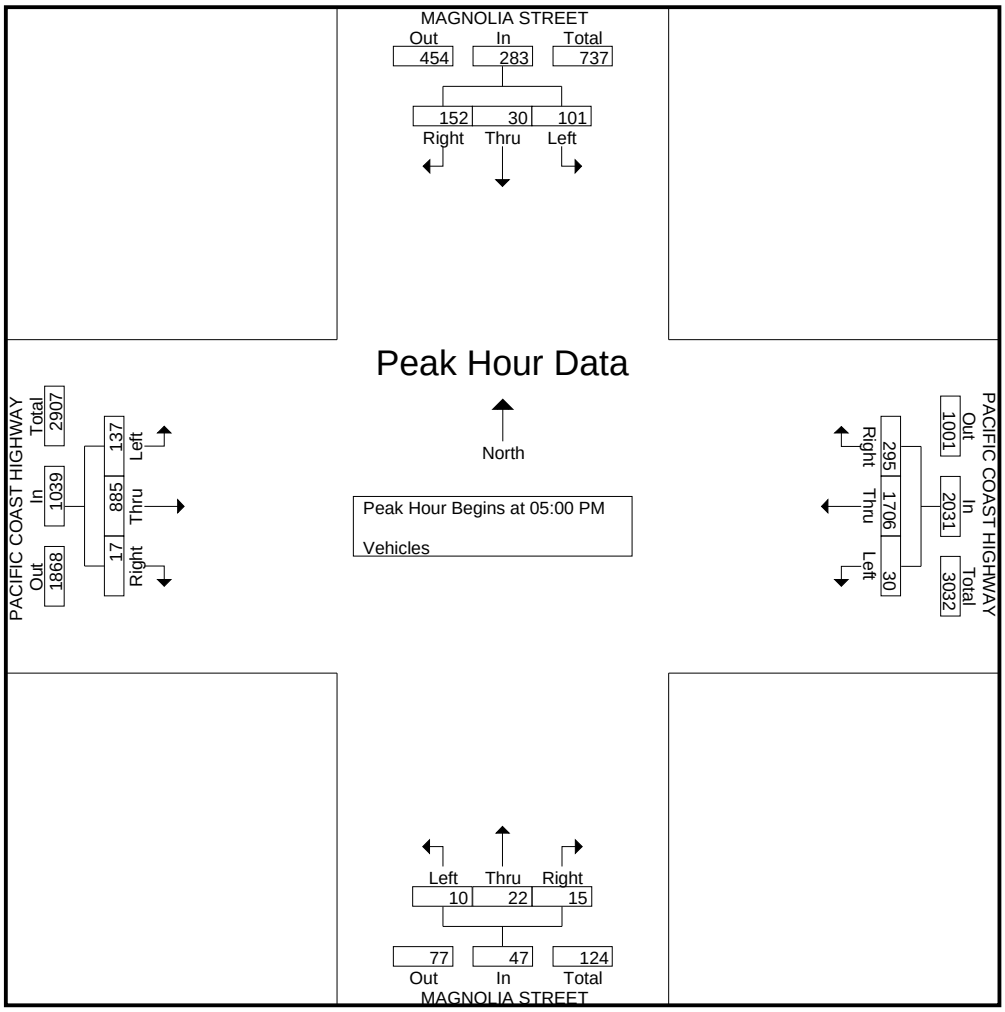

Transportation Studies, Inc.

2860 Walnut Avenue, Suite C
Tustin, CA. 92780

City: HUNTINGTON BEACH
N-S Direction: BROOKHURST STREET
E-W Direction: BUSHARD STREET

File Name : H0905036
Site Code : 00000000
Start Date : 5/5/2009
Page No : 1

Groups Printed- VEHICLES

	BROOKHURST STREET Southbound			DRIVEWAY Westbound			BROOKHURST STREET Northbound			BUSHARD STREET Eastbound			
Start Time	Right	Thru	Left	Right	Thru	Left	Right	Thru	Left	Right	Thru	Left	Int. Total
Factor	1.0	1.0	1.0	1.0	1.0	1.0	1.0	1.0	1.0	1.0	1.0	1.0	
07:00 AM	0	65	3	3	0	0	4	48	10	27	0	5	165
07:15 AM	0	95	1	1	0	2	0	80	9	44	0	2	234
07:30 AM	3	108	0	0	1	0	0	115	21	53	0	4	305
07:45 AM	2	139	0	1	0	0	1	104	22	44	0	1	314
Total	5	407	4	5	1	2	5	347	62	168	0	12	1018
08:00 AM	2	126	0	2	0	0	0	97	19	56	0	1	303
08:15 AM	3	114	2	1	0	0	1	111	17	57	0	2	308
08:30 AM	4	120	0	3	1	0	0	96	7	55	0	3	289
08:45 AM	3	125	0	3	0	0	0	101	12	50	0	1	295
Total	12	485	2	9	1	0	1	405	55	218	0	7	1195
*** BREAK ***													
04:30 PM	5	98	0	1	0	0	0	145	51	26	0	7	333
04:45 PM	8	93	0	0	0	0	0	152	45	21	0	5	324
Total	13	191	0	1	0	0	0	297	96	47	0	12	657
05:00 PM	2	86	0	0	0	0	0	158	62	23	0	1	332
05:15 PM	6	118	0	0	0	0	0	171	76	23	0	5	399
05:30 PM	7	107	0	0	0	0	0	173	39	27	0	3	356
05:45 PM	7	119	0	0	0	0	0	160	45	19	0	4	354
Total	22	430	0	0	0	0	0	662	222	92	0	13	1441
06:00 PM	1	107	0	0	0	0	0	150	36	25	0	1	320
06:15 PM	7	90	0	0	0	0	0	149	36	30	0	1	313
Grand Total	60	1710	6	15	2	2	6	2010	507	580	0	46	4944
Apprch %	3.4	96.3	0.3	78.9	10.5	10.5	0.2	79.7	20.1	92.7	0	7.3	
Total %	1.2	34.6	0.1	0.3	0	0	0.1	40.7	10.3	11.7	0	0.9	

Transportation Studies, Inc.

2860 Walnut Avenue, Suite C
Tustin, CA. 92780

File Name : H0905036
Site Code : 00000000
Start Date : 5/5/2009
Page No : 2

	BROOKHURST STREET Southbound				DRIVEWAY Westbound				BROOKHURST STREET Northbound				BUSHARD STREET Eastbound				
Start Time	Right	Thru	Left	App. Total	Right	Thru	Left	App. Total	Right	Thru	Left	App. Total	Right	Thru	Left	App. Total	Int. Total
Peak Hour Analysis From 07:00 AM to 08:45 AM - Peak 1 of 1																	
Peak Hour for Entire Intersection Begins at 07:30 AM																	
07:30 AM	**3**	108	0	111	0	**1**	0	1	0	**115**	21	**136**	53	0	**4**	57	305
07:45 AM	2	**139**	0	**141**	1	0	0	1	**1**	104	**22**	127	44	0	1	45	**314**
08:00 AM	2	126	0	128	**2**	0	0	**2**	0	97	19	116	56	0	1	57	303
08:15 AM	3	114	**2**	119	1	0	0	1	1	111	17	129	**57**	0	2	**59**	308
Total Volume	10	487	2	499	4	1	0	5	2	427	79	508	210	0	8	218	1230
% App. Total	2	97.6	0.4		80	20	0		0.4	84.1	15.6		96.3	0	3.7		
PHF	.833	.876	.250	.885	.500	.250	.000	.625	.500	.928	.898	.934	.921	.000	.500	.924	.979

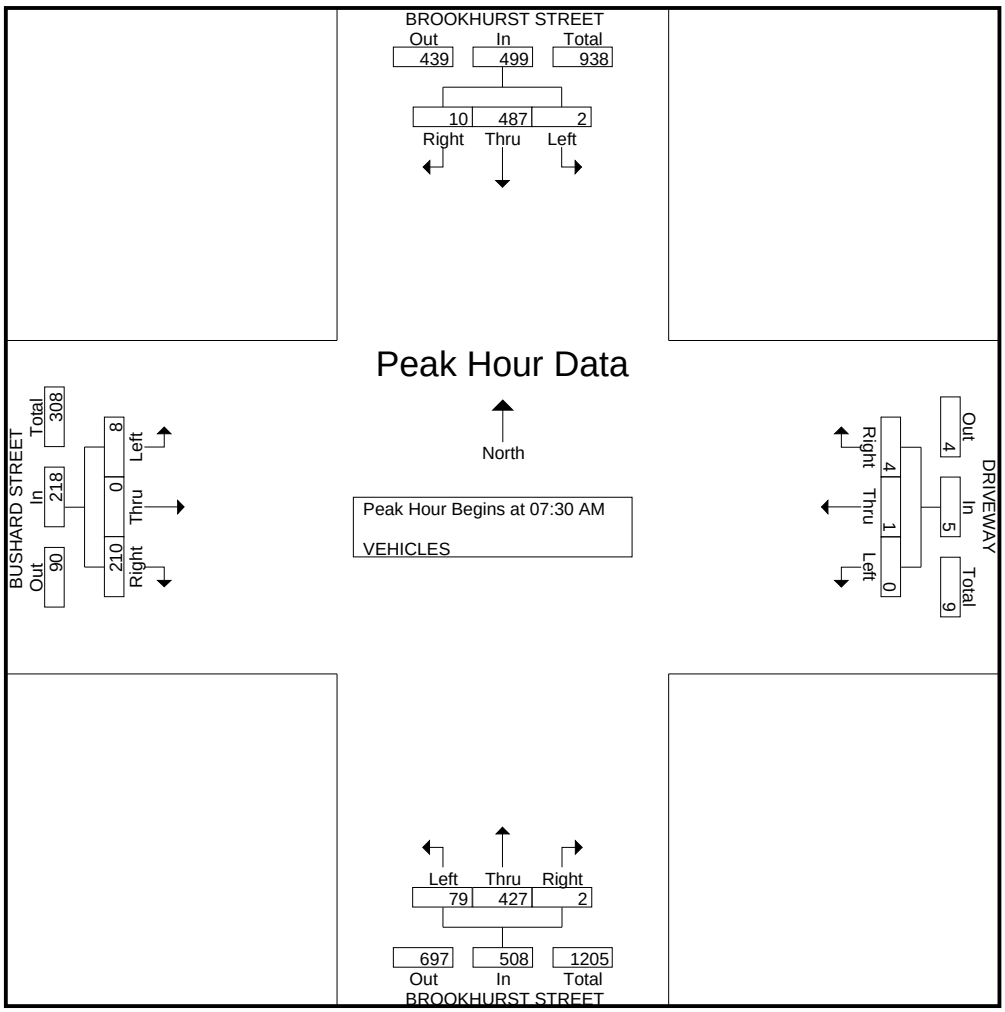

Transportation Studies, Inc.

2860 Walnut Avenue, Suite C
Tustin, CA. 92780

File Name : H0905036
Site Code : 00000000
Start Date : 5/5/2009
Page No : 3

	BROOKHURST STREET Southbound				DRIVEWAY Westbound				BROOKHURST STREET Northbound				BUSHARD STREET Eastbound				
Start Time	Right	Thru	Left	App. Total	Right	Thru	Left	App. Total	Right	Thru	Left	App. Total	Right	Thru	Left	App. Total	Int. Total
Peak Hour Analysis From 04:30 PM to 06:15 PM - Peak 1 of 1																	
Peak Hour for Entire Intersection Begins at 05:00 PM																	
05:00 PM	2	86	0	88	0	0	0	0	0	158	62	220	23	0	1	24	332
05:15 PM	6	118	0	124	0	0	0	0	0	171	**76**	**247**	23	0	**5**	28	**399**
05:30 PM	**7**	107	0	114	0	0	0	0	0	**173**	39	212	**27**	0	3	**30**	356
05:45 PM	7	**119**	0	**126**	0	0	0	0	0	160	45	205	19	0	4	23	354
Total Volume	22	430	0	452	0	0	0	0	0	662	222	884	92	0	13	105	1441
% App. Total	4.9	95.1	0		0	0	0		0	74.9	25.1		87.6	0	12.4		
PHF	.786	.903	.000	.897	.000	.000	.000	.000	.000	.957	.730	.895	.852	.000	.650	.875	.903

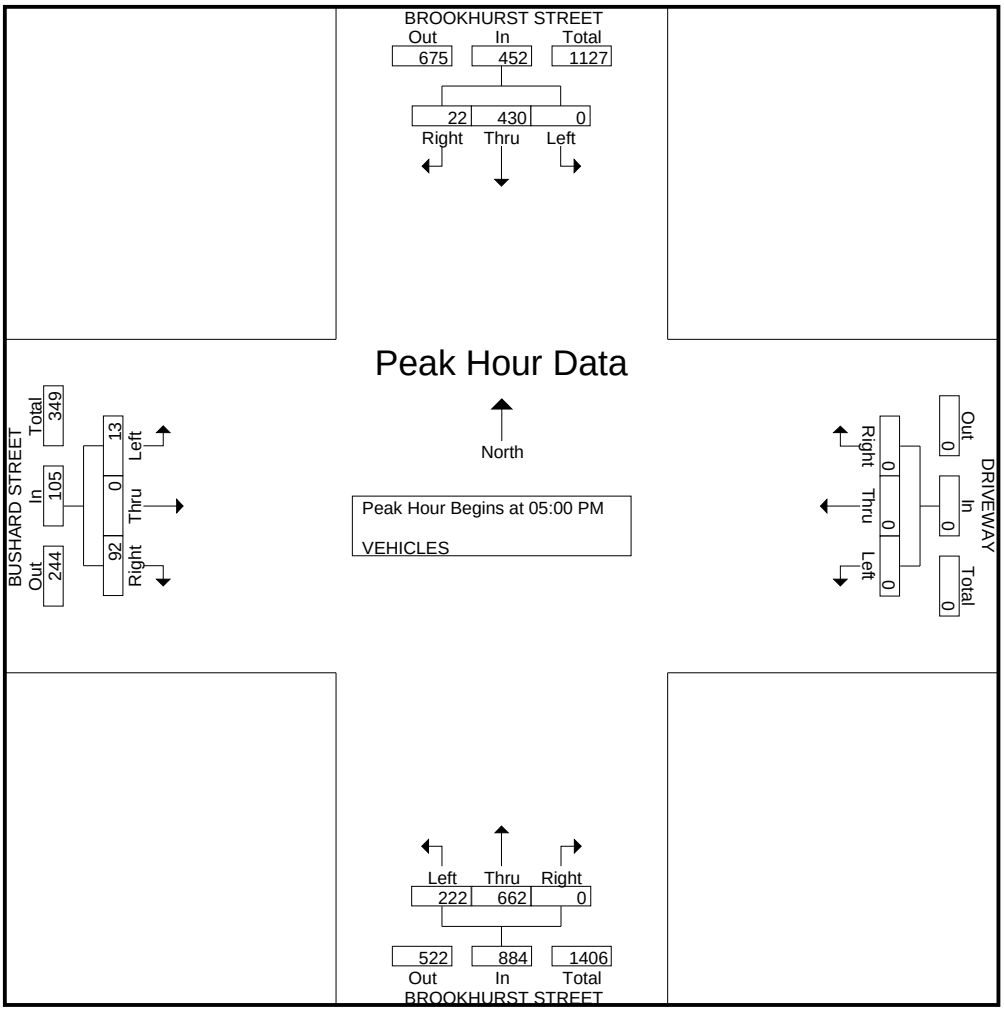

Transportation Studies, Inc.

2860 Walnut Avenue, Suite C
Tustin, CA. 92780

City: HUNTINGTON BEACH
N-S Direction: BROOKHURST STREET
E-W Direction: PACIFIC COAST HIGHWAY

File Name : H0905032
Site Code : 00005062
Start Date : 5/6/2009
Page No : 1

Groups Printed- Vehicles

	BROOKHURST STREET Southbound			PACIFIC COAST HIGHWAY Westbound			BROOKHURST STREET Northbound			PACIFIC COAST HIGHWAY Eastbound			
Start Time	Right	Thru	Left	Right	Thru	Left	Right	Thru	Left	Right	Thru	Left	Int. Total
Factor	1.0	1.0	1.0	1.0	1.0	1.0	1.0	1.0	1.0	1.0	1.0	1.0	
07:00 AM	25	2	68	33	89	0	0	6	3	0	245	20	491
07:15 AM	28	0	94	55	135	0	1	11	8	0	361	21	714
07:30 AM	28	1	111	52	126	2	2	5	6	0	397	46	776
07:45 AM	29	2	154	87	158	3	3	8	1	0	511	46	1002
Total	110	5	427	227	508	5	6	30	18	0	1514	133	2983
08:00 AM	24	1	111	65	142	2	2	5	2	1	397	39	791
08:15 AM	34	2	108	83	179	1	5	3	1	1	409	37	863
08:30 AM	30	1	140	70	160	0	2	3	0	0	404	44	854
08:45 AM	38	1	151	64	167	1	1	2	1	0	389	24	839
Total	126	5	510	282	648	4	10	13	4	2	1599	144	3347
*** BREAK ***													
04:30 PM	50	1	73	142	365	5	1	0	6	0	203	27	873
04:45 PM	41	2	84	148	422	2	1	3	3	1	224	42	973
Total	91	3	157	290	787	7	2	3	9	1	427	69	1846
05:00 PM	38	1	69	161	430	4	1	7	2	1	181	46	941
05:15 PM	45	2	83	220	497	5	5	8	1	1	182	54	1103
05:30 PM	39	1	89	169	495	1	4	4	3	0	194	35	1034
05:45 PM	44	2	79	190	490	6	6	8	3	0	194	45	1067
Total	166	6	320	740	1912	16	16	27	9	2	751	180	4145
06:00 PM	51	1	73	178	389	1	2	3	1	1	227	48	975
06:15 PM	44	3	84	142	332	2	8	3	0	0	210	28	856
Grand Total	588	23	1571	1859	4576	35	44	79	41	6	4728	602	14152
Apprch %	26.9	1.1	72	28.7	70.7	0.5	26.8	48.2	25	0.1	88.6	11.3	
Total %	4.2	0.2	11.1	13.1	32.3	0.2	0.3	0.6	0.3	0	33.4	4.3	

Transportation Studies, Inc.

2860 Walnut Avenue, Suite C
Tustin, CA. 92780

File Name : H0905032
Site Code : 00005062
Start Date : 5/6/2009
Page No : 2

	BROOKHURST STREET Southbound				PACIFIC COAST HIGHWAY Westbound				BROOKHURST STREET Northbound				PACIFIC COAST HIGHWAY Eastbound				
Start Time	Right	Thru	Left	App. Total	Right	Thru	Left	App. Total	Right	Thru	Left	App. Total	Right	Thru	Left	App. Total	Int. Total
Peak Hour Analysis From 07:00 AM to 08:45 AM - Peak 1 of 1																	
Peak Hour for Entire Intersection Begins at 07:45 AM																	
07:45 AM	29	**2**	**154**	**185**	**87**	158	**3**	248	3	**8**	1	**12**	0	**511**	**46**	**557**	**1002**
08:00 AM	24	1	111	136	65	142	2	209	2	5	**2**	9	**1**	397	39	437	791
08:15 AM	**34**	2	108	144	83	**179**	1	**263**	**5**	3	1	9	1	409	37	447	863
08:30 AM	30	1	140	171	70	160	0	230	2	3	0	5	0	404	44	448	854
Total Volume	117	6	513	636	305	639	6	950	12	19	4	35	2	1721	166	1889	3510
% App. Total	18.4	0.9	80.7		32.1	67.3	0.6		34.3	54.3	11.4		0.1	91.1	8.8		
PHF	.860	.750	.833	.859	.876	.892	.500	.903	.600	.594	.500	.729	.500	.842	.902	.848	.876

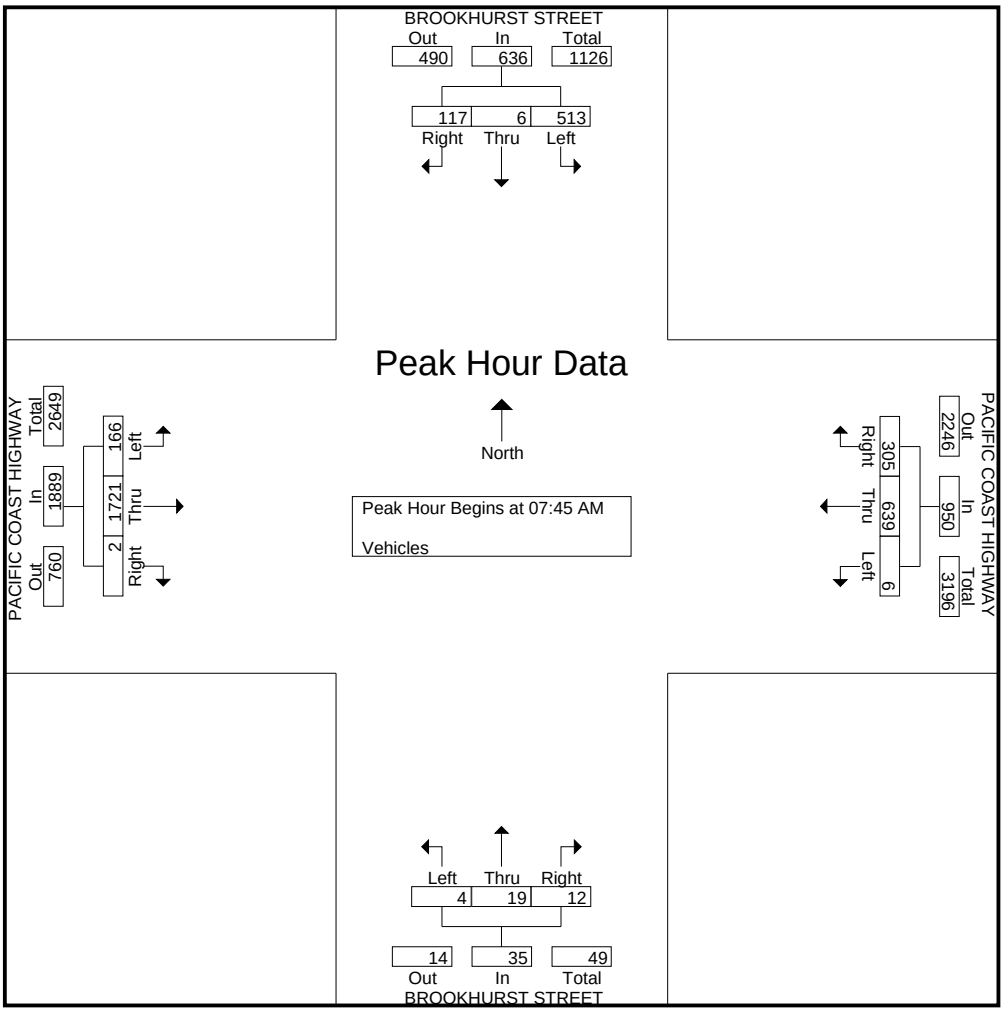

Transportation Studies, Inc.

2860 Walnut Avenue, Suite C
Tustin, CA. 92780

File Name : H0905032
Site Code : 00005062
Start Date : 5/6/2009
Page No : 3

	BROOKHURST STREET Southbound				PACIFIC COAST HIGHWAY Westbound				BROOKHURST STREET Northbound				PACIFIC COAST HIGHWAY Eastbound				
Start Time	Right	Thru	Left	App. Total	Right	Thru	Left	App. Total	Right	Thru	Left	App. Total	Right	Thru	Left	App. Total	Int. Total
Peak Hour Analysis From 04:30 PM to 06:15 PM - Peak 1 of 1																	
Peak Hour for Entire Intersection Begins at 05:15 PM																	
05:15 PM	45	**2**	83	**130**	**220**	**497**	5	**722**	5	**8**	1	14	**1**	182	**54**	237	**1103**
05:30 PM	39	1	**89**	129	169	495	1	665	4	4	**3**	11	0	194	35	229	1034
05:45 PM	44	2	79	125	190	490	**6**	686	**6**	8	3	**17**	0	194	45	239	1067
06:00 PM	**51**	1	73	125	178	389	1	568	2	3	1	6	1	**227**	48	**276**	975
Total Volume	179	6	324	509	757	1871	13	2641	17	23	8	48	2	797	182	981	4179
% App. Total	35.2	1.2	63.7		28.7	70.8	0.5		35.4	47.9	16.7		0.2	81.2	18.6		
PHF	.877	.750	.910	.979	.860	.941	.542	.914	.708	.719	.667	.706	.500	.878	.843	.889	.947

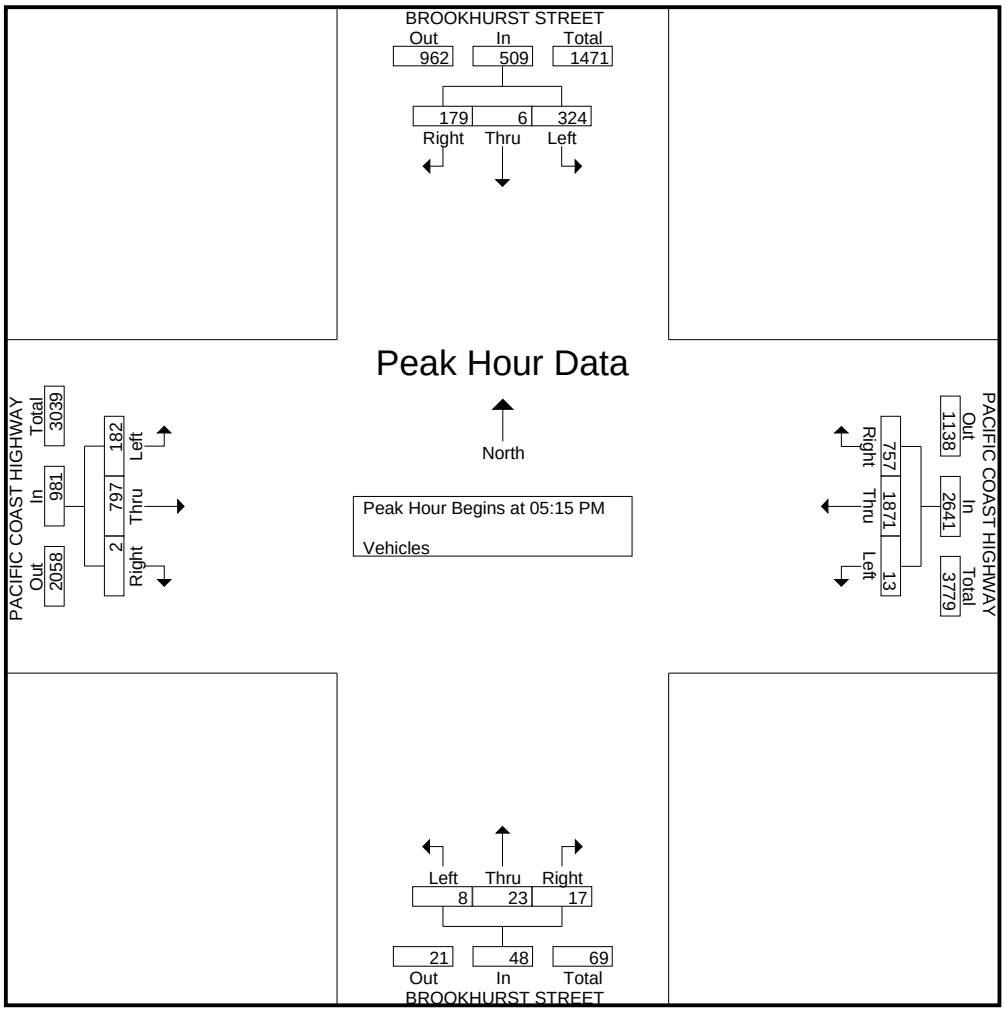

Transportation Studies, Inc.

2860 Walnut Avenue, Suite C
Tustin, CA. 92780

City: COSTA MESA
N-S Direction: PLACENTIA AVENUE
E-W Direction: VICTORIA STREET

File Name : H0905027
Site Code : 00000246
Start Date : 5/6/2009
Page No : 1

Groups Printed- Vehicles

	PLACENTIA AVENUE Southbound			VICTORIA STREET Westbound			PLACENTIA AVENUE Northbound			VICTORIA STREET Eastbound			
Start Time	Right	Thru	Left	Right	Thru	Left	Right	Thru	Left	Right	Thru	Left	Int. Total
Factor	1.0	1.0	1.0	1.0	1.0	1.0	1.0	1.0	1.0	1.0	1.0	1.0	
07:00 AM	9	63	27	14	65	46	23	50	41	54	198	7	597
07:15 AM	9	85	27	16	89	21	29	67	27	81	293	14	758
07:30 AM	10	138	26	17	91	28	26	105	51	92	280	10	874
07:45 AM	11	151	15	28	143	40	45	125	56	140	290	32	1076
Total	39	437	95	75	388	135	123	347	175	367	1061	63	3305
08:00 AM	17	164	44	38	109	47	50	124	90	97	289	12	1081
08:15 AM	13	114	25	20	158	49	41	69	64	116	339	24	1032
08:30 AM	4	130	38	15	83	43	33	86	61	111	274	12	890
08:45 AM	5	110	13	12	106	33	33	82	42	97	284	10	827
Total	39	518	120	85	456	172	157	361	257	421	1186	58	3830
*** BREAK ***													
04:30 PM	27	104	16	22	253	31	37	181	119	87	152	17	1046
04:45 PM	32	115	27	28	334	36	42	166	117	87	122	24	1130
Total	59	219	43	50	587	67	79	347	236	174	274	41	2176
05:00 PM	29	107	24	20	344	54	46	173	147	51	145	20	1160
05:15 PM	48	132	29	18	352	37	34	180	138	90	177	12	1247
05:30 PM	43	136	23	21	346	39	35	155	118	78	143	15	1152
05:45 PM	41	142	12	19	320	35	35	147	95	86	132	23	1087
Total	161	517	88	78	1362	165	150	655	498	305	597	70	4646
06:00 PM	32	136	15	19	317	47	46	115	105	80	113	15	1040
06:15 PM	31	139	17	28	298	40	26	141	112	77	164	16	1089
Grand Total	361	1966	378	335	3408	626	581	1966	1383	1424	3395	263	16086
Apprch %	13.3	72.7	14	7.7	78	14.3	14.8	50	35.2	28	66.8	5.2	
Total %	2.2	12.2	2.3	2.1	21.2	3.9	3.6	12.2	8.6	8.9	21.1	1.6	

Transportation Studies, Inc.

2860 Walnut Avenue, Suite C
Tustin, CA. 92780

File Name : H0905027
Site Code : 00000246
Start Date : 5/6/2009
Page No : 2

	PLACENTIA AVENUE Southbound				VICTORIA STREET Westbound				PLACENTIA AVENUE Northbound				VICTORIA STREET Eastbound				
Start Time	Right	Thru	Left	App. Total	Right	Thru	Left	App. Total	Right	Thru	Left	App. Total	Right	Thru	Left	App. Total	Int. Total
Peak Hour Analysis From 07:00 AM to 08:45 AM - Peak 1 of 1																	
Peak Hour for Entire Intersection Begins at 07:45 AM																	
07:45 AM	11	151	15	177	28	143	40	211	45	**125**	56	226	**140**	290	**32**	462	1076
08:00 AM	**17**	**164**	**44**	**225**	**38**	109	47	194	**50**	124	**90**	**264**	97	289	12	398	**1081**
08:15 AM	13	114	25	152	20	**158**	**49**	**227**	41	69	64	174	116	**339**	24	**479**	1032
08:30 AM	4	130	38	172	15	83	43	141	33	86	61	180	111	274	12	397	890
Total Volume	45	559	122	726	101	493	179	773	169	404	271	844	464	1192	80	1736	4079
% App. Total	6.2	77	16.8		13.1	63.8	23.2		20	47.9	32.1		26.7	68.7	4.6		
PHF	.662	.852	.693	.807	.664	.780	.913	.851	.845	.808	.753	.799	.829	.879	.625	.906	.943

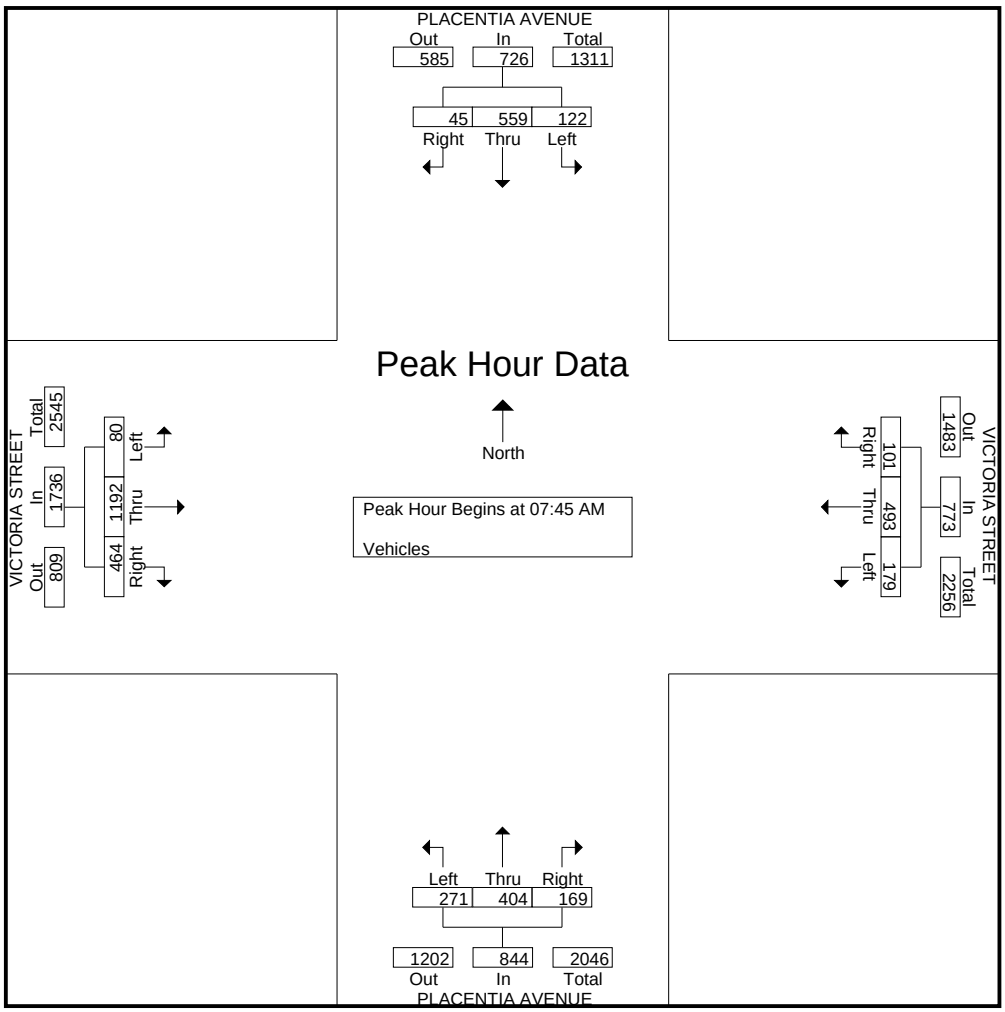

Transportation Studies, Inc.

2860 Walnut Avenue, Suite C
Tustin, CA. 92780

File Name : H0905027
Site Code : 00000246
Start Date : 5/6/2009
Page No : 3

	PLACENTIA AVENUE Southbound				VICTORIA STREET Westbound				PLACENTIA AVENUE Northbound				VICTORIA STREET Eastbound				
Start Time	Right	Thru	Left	App. Total	Right	Thru	Left	App. Total	Right	Thru	Left	App. Total	Right	Thru	Left	App. Total	Int. Total
Peak Hour Analysis From 04:30 PM to 06:15 PM - Peak 1 of 1																	
Peak Hour for Entire Intersection Begins at 04:45 PM																	
04:45 PM	32	115	27	174	**28**	334	36	398	42	166	117	325	87	122	**24**	233	1130
05:00 PM	29	107	24	160	20	344	**54**	**418**	**46**	173	**147**	**366**	51	145	20	216	1160
05:15 PM	**48**	132	**29**	**209**	18	**352**	37	407	34	**180**	138	352	**90**	**177**	12	**279**	**1247**
05:30 PM	43	**136**	23	202	21	346	39	406	35	155	118	308	78	143	15	236	1152
Total Volume	152	490	103	745	87	1376	166	1629	157	674	520	1351	306	587	71	964	4689
% App. Total	20.4	65.8	13.8		5.3	84.5	10.2		11.6	49.9	38.5		31.7	60.9	7.4		
PHF	.792	.901	.888	.891	.777	.977	.769	.974	.853	.936	.884	.923	.850	.829	.740	.864	.940

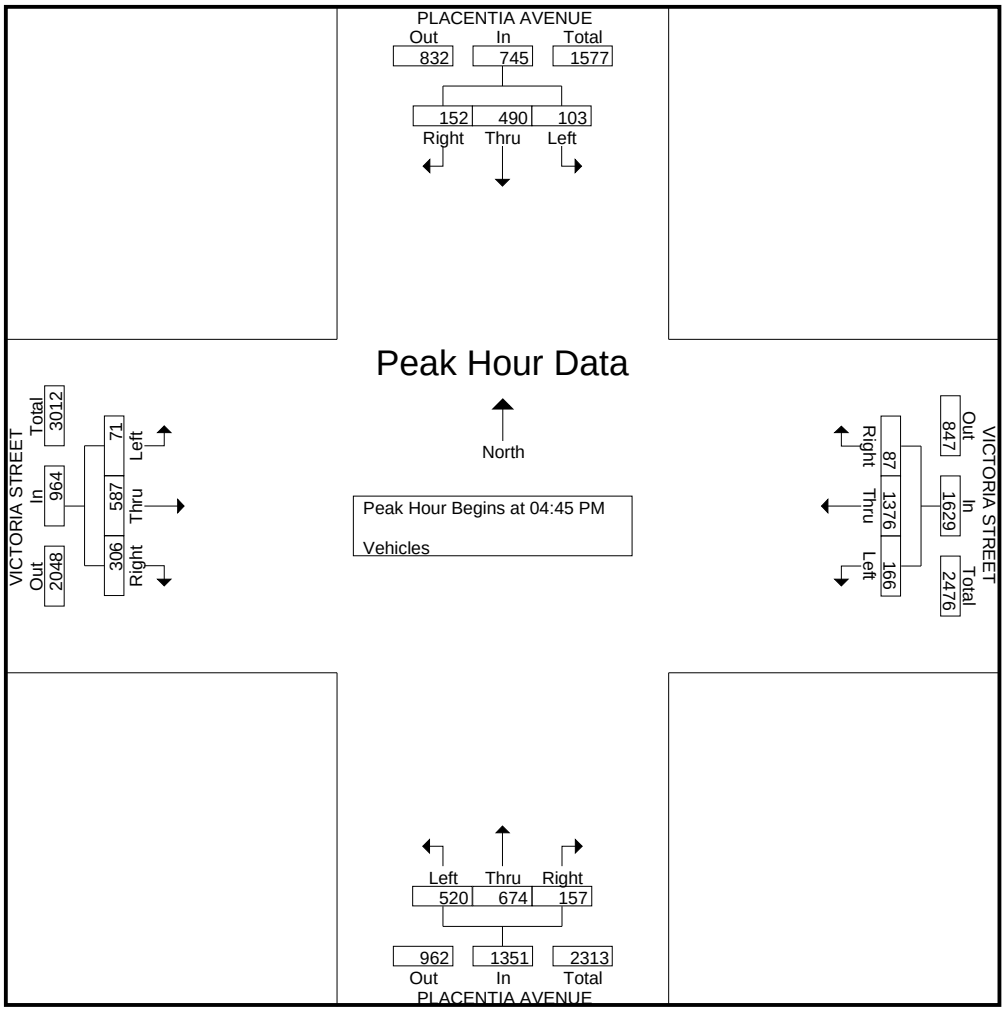

Transportation Studies, Inc.

2860 Walnut Avenue, Suite C
Tustin, CA. 92780

City: COSTA MESA
N-S Direction: POMONA AVENUE
E-W Direction: VICTORIA STREET

File Name : H0905029
Site Code : 00002245
Start Date : 5/6/2009
Page No : 1

Groups Printed- Vehicles

	POMONA AVENUE Southbound			VICTORIA STREET Westbound			POMONA AVENUE Northbound			VICTORIA STREET Eastbound			
Start Time	Right	Thru	Left	Right	Thru	Left	Right	Thru	Left	Right	Thru	Left	Int. Total
Factor	1.0	1.0	1.0	1.0	1.0	1.0	1.0	1.0	1.0	1.0	1.0	1.0	
07:00 AM	2	19	4	5	115	16	19	12	5	7	263	3	470
07:15 AM	2	15	3	2	135	14	21	11	6	5	276	3	493
07:30 AM	1	21	2	5	158	15	22	21	5	6	321	2	579
07:45 AM	4	25	3	2	165	20	20	30	8	16	370	4	667
Total	9	80	12	14	573	65	82	74	24	34	1230	12	2209
08:00 AM	3	29	1	6	173	22	21	26	9	5	384	3	682
08:15 AM	5	27	1	6	176	16	16	15	12	17	385	3	679
08:30 AM	2	29	5	4	176	28	20	18	3	14	347	5	651
08:45 AM	3	19	4	7	151	19	22	15	3	11	357	3	614
Total	13	104	11	23	676	85	79	74	27	47	1473	14	2626
*** BREAK ***													
04:30 PM	5	22	3	8	312	36	30	42	5	15	202	6	686
04:45 PM	6	41	4	7	369	31	32	22	12	25	175	6	730
Total	11	63	7	15	681	67	62	64	17	40	377	12	1416
05:00 PM	12	32	6	10	395	25	37	40	16	13	211	1	798
05:15 PM	5	31	5	3	389	26	26	39	12	24	227	10	797
05:30 PM	5	41	5	9	373	36	24	37	10	17	193	4	754
05:45 PM	5	41	3	4	366	22	24	54	5	22	178	2	726
Total	27	145	19	26	1523	109	111	170	43	76	809	17	3075
06:00 PM	7	37	2	16	361	30	24	34	7	18	170	2	708
06:15 PM	2	32	2	8	355	26	19	30	7	11	199	7	698
Grand Total	69	461	53	102	4169	382	377	446	125	226	4258	64	10732
Apprch %	11.8	79.1	9.1	2.2	89.6	8.2	39.8	47	13.2	5	93.6	1.4	
Total %	0.6	4.3	0.5	1	38.8	3.6	3.5	4.2	1.2	2.1	39.7	0.6	

Transportation Studies, Inc.

2860 Walnut Avenue, Suite C
Tustin, CA. 92780

File Name : H0905029
Site Code : 00002245
Start Date : 5/6/2009
Page No : 2

	POMONA AVENUE Southbound				VICTORIA STREET Westbound				POMONA AVENUE Northbound				VICTORIA STREET Eastbound				
Start Time	Right	Thru	Left	App. Total	Right	Thru	Left	App. Total	Right	Thru	Left	App. Total	Right	Thru	Left	App. Total	Int. Total
Peak Hour Analysis From 07:00 AM to 08:45 AM - Peak 1 of 1																	
Peak Hour for Entire Intersection Begins at 07:45 AM																	
07:45 AM	4	25	3	32	2	165	20	187	20	**30**	8	**58**	16	370	4	390	667
08:00 AM	3	**29**	1	33	**6**	173	22	201	**21**	26	9	56	5	384	3	392	**682**
08:15 AM	**5**	27	1	33	6	**176**	16	198	16	15	**12**	43	**17**	**385**	3	**405**	679
08:30 AM	2	29	**5**	**36**	4	176	**28**	**208**	20	18	3	41	14	347	**5**	366	651
Total Volume	14	110	10	134	18	690	86	794	77	89	32	198	52	1486	15	1553	2679
% App. Total	10.4	82.1	7.5		2.3	86.9	10.8		38.9	44.9	16.2		3.3	95.7	1		
PHF	.700	.948	.500	.931	.750	.980	.768	.954	.917	.742	.667	.853	.765	.965	.750	.959	.982

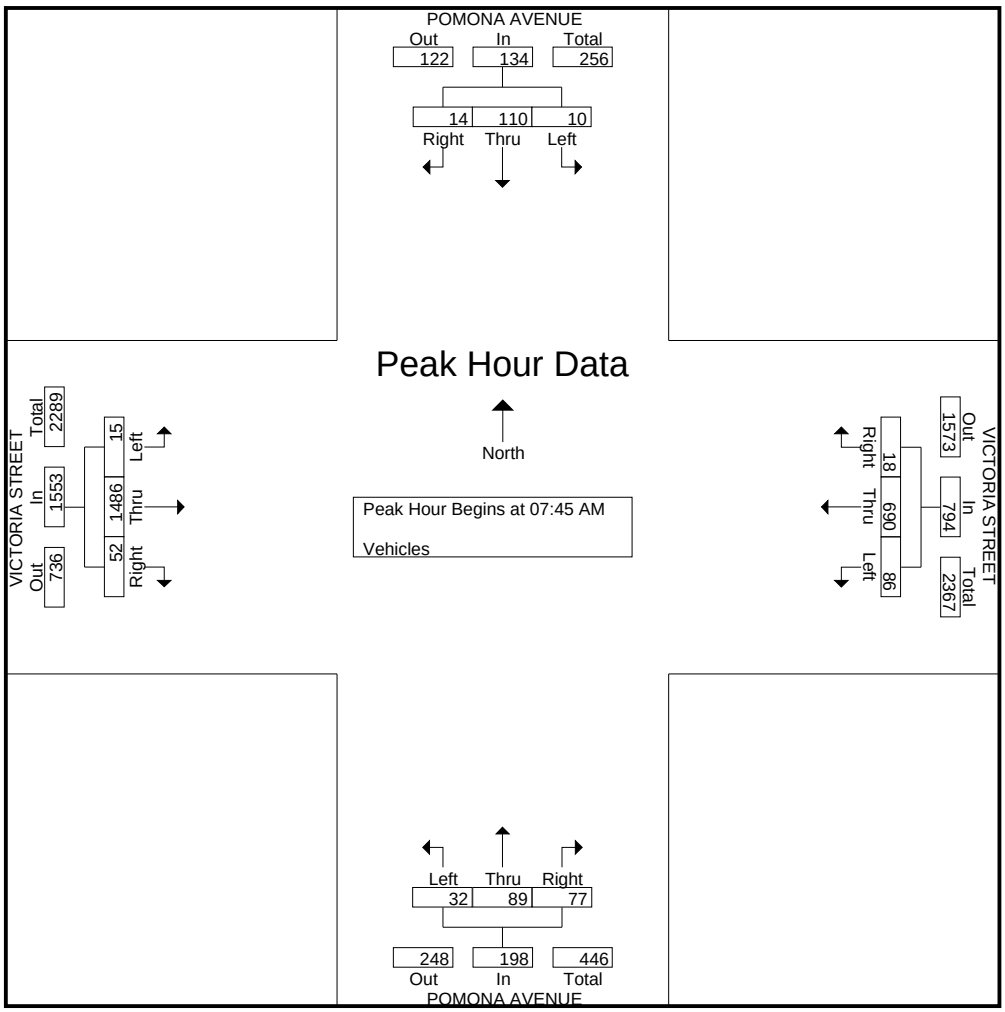

Transportation Studies, Inc.

2860 Walnut Avenue, Suite C
Tustin, CA. 92780

File Name : H0905029
Site Code : 00002245
Start Date : 5/6/2009
Page No : 3

	POMONA AVENUE Southbound				VICTORIA STREET Westbound				POMONA AVENUE Northbound				VICTORIA STREET Eastbound				
Start Time	Right	Thru	Left	App. Total	Right	Thru	Left	App. Total	Right	Thru	Left	App. Total	Right	Thru	Left	App. Total	Int. Total
Peak Hour Analysis From 04:30 PM to 06:15 PM - Peak 1 of 1																	
Peak Hour for Entire Intersection Begins at 04:45 PM																	
04:45 PM	6	**41**	4	**51**	7	369	31	407	32	22	12	66	**25**	175	6	206	730
05:00 PM	**12**	32	**6**	50	**10**	**395**	25	**430**	**37**	**40**	**16**	**93**	13	211	1	225	**798**
05:15 PM	5	31	5	41	3	389	26	418	26	39	12	77	24	**227**	**10**	**261**	797
05:30 PM	5	41	5	51	9	373	**36**	418	24	37	10	71	17	193	4	214	754
Total Volume	28	145	20	193	29	1526	118	1673	119	138	50	307	79	806	21	906	3079
% App. Total	14.5	75.1	10.4		1.7	91.2	7.1		38.8	45	16.3		8.7	89	2.3		
PHF	.583	.884	.833	.946	.725	.966	.819	.973	.804	.863	.781	.825	.790	.888	.525	.868	.965

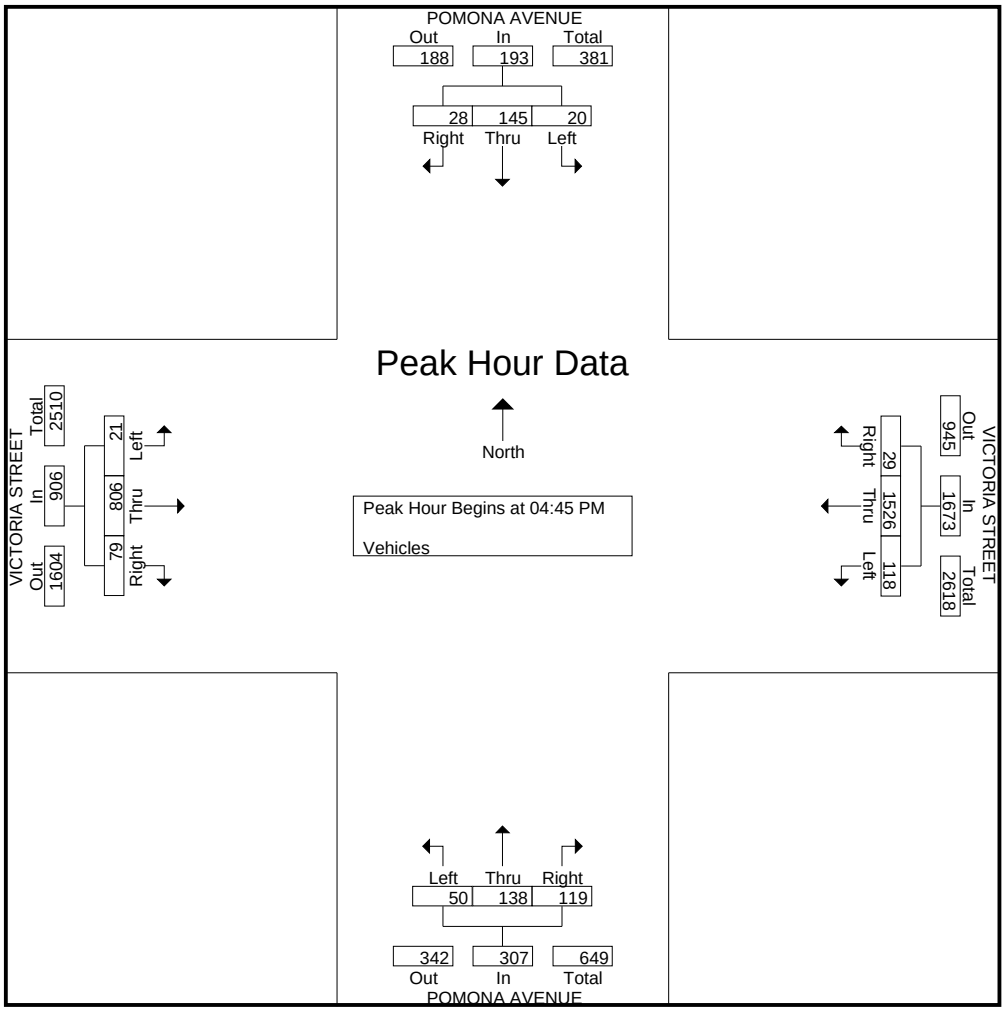

Transportation Studies, Inc.

2860 Walnut Avenue, Suite C
Tustin, CA. 92780

City: COSTA MESA
N-S Direction: HARBOR BOULEVARD
E-W Direction: VICTORIA STREET

File Name : H0905020
Site Code : 00005062
Start Date : 5/7/2009
Page No : 1

Groups Printed- Vehicles

	HARBOR BOULEVARD Southbound			VICTORIA STREET Westbound			HARBOR BOULEVARD Northbound			VICTORIA STREET Eastbound			
Start Time	Right	Thru	Left	Right	Thru	Left	Right	Thru	Left	Right	Thru	Left	Int. Total
Factor	1.0	1.0	1.0	1.0	1.0	1.0	1.0	1.0	1.0	1.0	1.0	1.0	
07:00 AM	35	121	27	16	69	17	4	80	7	15	233	26	650
07:15 AM	27	146	37	14	98	21	21	106	12	16	288	44	830
07:30 AM	25	180	28	31	132	24	22	109	12	10	323	62	958
07:45 AM	30	232	25	26	159	31	20	152	11	23	325	56	1090
Total	117	679	117	87	458	93	67	447	42	64	1169	188	3528
08:00 AM	51	222	32	26	160	36	18	149	22	22	307	65	1110
08:15 AM	52	244	30	25	166	42	21	164	16	18	321	53	1152
08:30 AM	33	235	32	32	138	26	31	150	11	26	319	74	1107
08:45 AM	30	229	31	23	112	21	26	148	12	23	303	34	992
Total	166	930	125	106	576	125	96	611	61	89	1250	226	4361
*** BREAK ***													
04:30 PM	55	243	31	41	282	48	23	269	19	15	136	73	1235
04:45 PM	74	267	33	35	312	29	26	236	27	17	175	78	1309
Total	129	510	64	76	594	77	49	505	46	32	311	151	2544
05:00 PM	67	248	37	43	274	31	38	288	26	22	143	69	1286
05:15 PM	75	308	35	45	302	26	32	287	32	19	180	65	1406
05:30 PM	78	293	37	36	324	35	28	270	33	22	141	57	1354
05:45 PM	71	274	34	27	324	39	22	261	29	16	143	61	1301
Total	291	1123	143	151	1224	131	120	1106	120	79	607	252	5347
06:00 PM	60	246	35	38	296	32	29	264	28	22	128	63	1241
06:15 PM	44	278	27	36	261	42	22	263	23	13	144	55	1208
Grand Total	807	3766	511	494	3409	500	383	3196	320	299	3609	935	18229
Apprch %	15.9	74.1	10.1	11.2	77.4	11.4	9.8	82	8.2	6.2	74.5	19.3	
Total %	4.4	20.7	2.8	2.7	18.7	2.7	2.1	17.5	1.8	1.6	19.8	5.1	

Transportation Studies, Inc.

2860 Walnut Avenue, Suite C
Tustin, CA. 92780

File Name : H0905020
Site Code : 00005062
Start Date : 5/7/2009
Page No : 2

	HARBOR BOULEVARD Southbound				VICTORIA STREET Westbound				HARBOR BOULEVARD Northbound				VICTORIA STREET Eastbound				
Start Time	Right	Thru	Left	App. Total	Right	Thru	Left	App. Total	Right	Thru	Left	App. Total	Right	Thru	Left	App. Total	Int. Total
Peak Hour Analysis From 07:00 AM to 08:45 AM - Peak 1 of 1																	
Peak Hour for Entire Intersection Begins at 07:45 AM																	
07:45 AM	30	232	25	287	26	159	31	216	20	152	11	183	23	**325**	56	404	1090
08:00 AM	51	222	**32**	305	26	160	36	222	18	149	**22**	189	22	307	65	394	1110
08:15 AM	**52**	**244**	30	**326**	25	**166**	**42**	**233**	21	**164**	16	**201**	18	321	53	392	**1152**
08:30 AM	33	235	32	300	**32**	138	26	196	**31**	150	11	192	**26**	319	**74**	**419**	1107
Total Volume	166	933	119	1218	109	623	135	867	90	615	60	765	89	1272	248	1609	4459
% App. Total	13.6	76.6	9.8		12.6	71.9	15.6		11.8	80.4	7.8		5.5	79.1	15.4		
PHF	.798	.956	.930	.934	.852	.938	.804	.930	.726	.938	.682	.951	.856	.978	.838	.960	.968

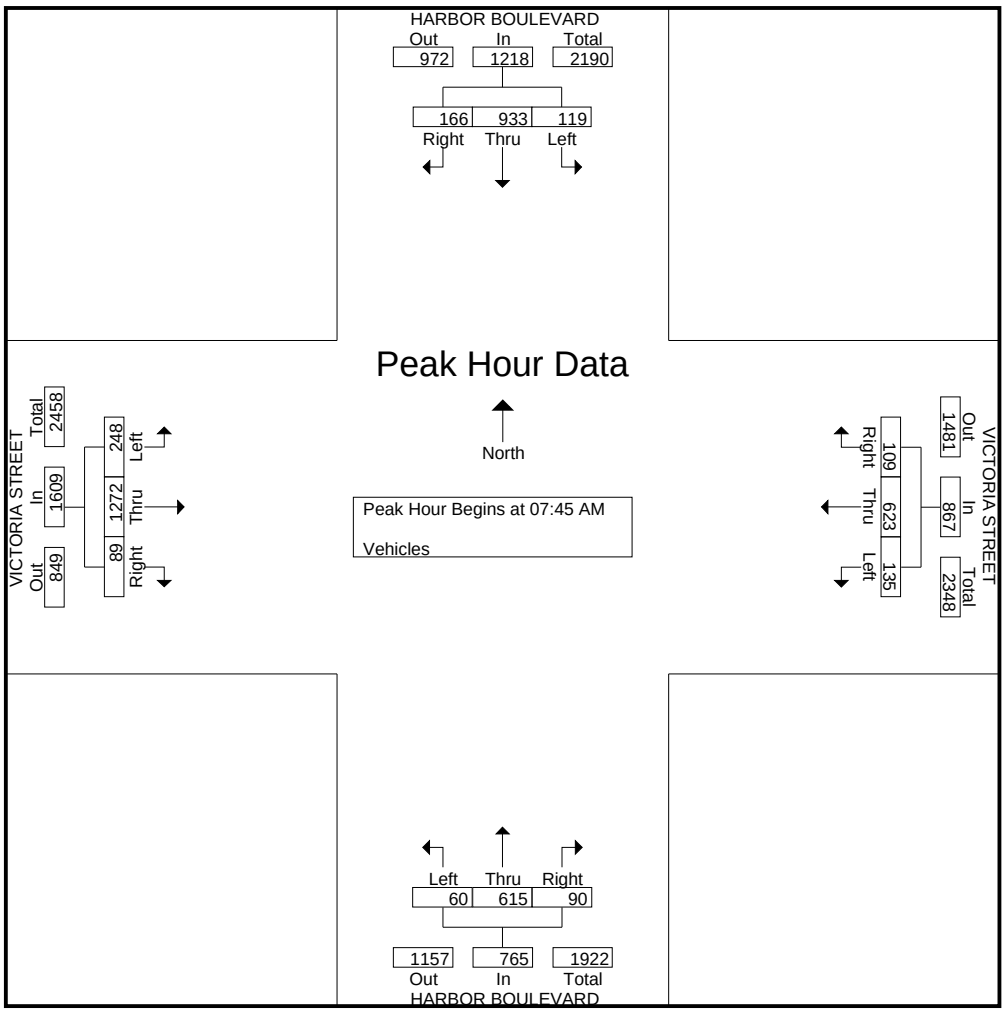

Transportation Studies, Inc.

2860 Walnut Avenue, Suite C
Tustin, CA. 92780

File Name : H0905020
Site Code : 00005062
Start Date : 5/7/2009
Page No : 3

	HARBOR BOULEVARD Southbound				VICTORIA STREET Westbound				HARBOR BOULEVARD Northbound				VICTORIA STREET Eastbound				
Start Time	Right	Thru	Left	App. Total	Right	Thru	Left	App. Total	Right	Thru	Left	App. Total	Right	Thru	Left	App. Total	Int. Total
Peak Hour Analysis From 04:30 PM to 06:15 PM - Peak 1 of 1																	
Peak Hour for Entire Intersection Begins at 04:45 PM																	
04:45 PM	74	267	33	374	35	312	29	376	26	236	27	289	17	175	**78**	**270**	1309
05:00 PM	67	248	**37**	352	43	274	31	348	**38**	**288**	26	**352**	**22**	143	69	234	1286
05:15 PM	75	**308**	35	**418**	**45**	302	26	373	32	287	32	351	19	**180**	65	264	**1406**
05:30 PM	**78**	293	37	408	36	**324**	**35**	**395**	28	270	**33**	331	22	141	57	220	1354
Total Volume	294	1116	142	1552	159	1212	121	1492	124	1081	118	1323	80	639	269	988	5355
% App. Total	18.9	71.9	9.1		10.7	81.2	8.1		9.4	81.7	8.9		8.1	64.7	27.2		
PHF	.942	.906	.959	.928	.883	.935	.864	.944	.816	.938	.894	.940	.909	.888	.862	.915	.952

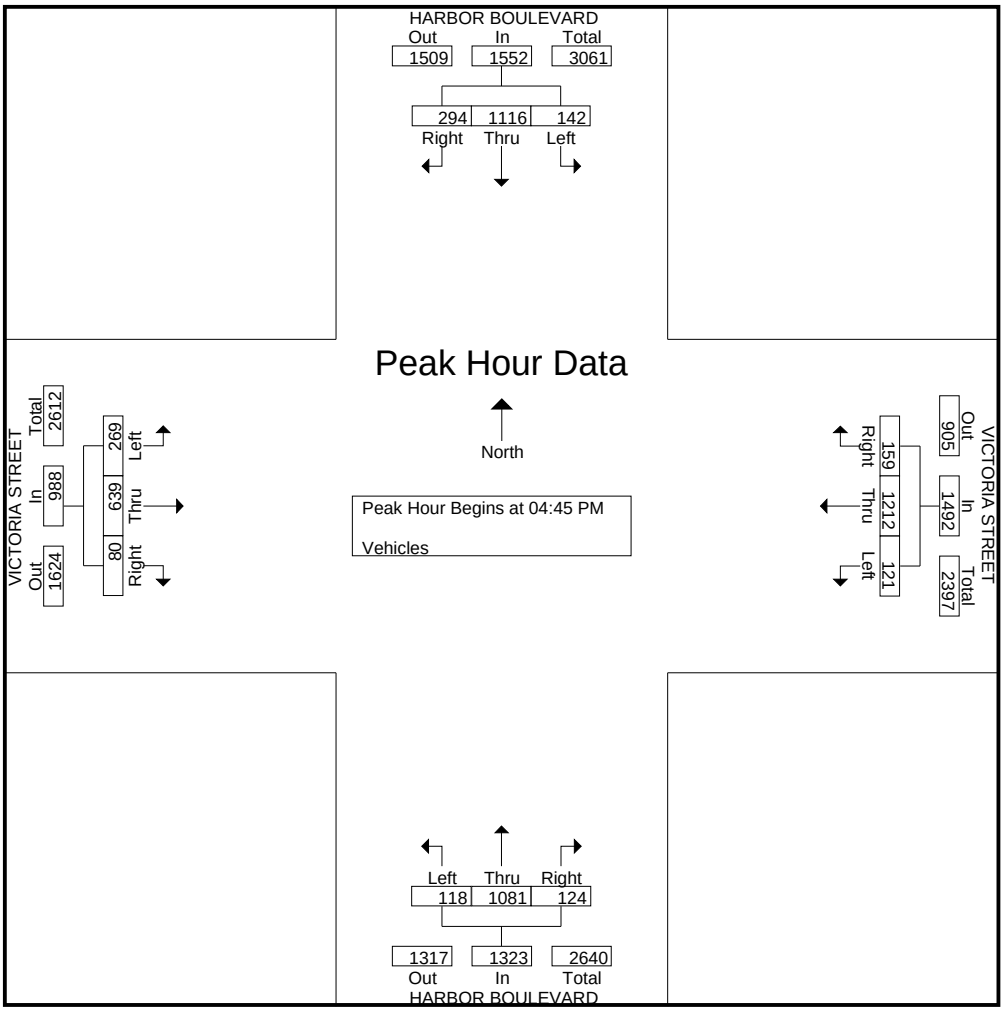

Transportation Studies, Inc.

2860 Walnut Avenue, Suite C
Tustin, CA. 92780

City: COSTA MESA
N-S Direction: NEWPORT BOULEVARD
E-W Direction: VICTORIA STREET

File Name : H0905023
Site Code : 00005059
Start Date : 5/6/2009
Page No : 1

Groups Printed- Vehicles

	NEWPORT BOULEVARD Southbound			VICTORIA STREET Westbound			ONE WAY Northbound			VICTORIA STREET Eastbound			
Start Time	Right	Thru	Left	Right	Thru	Left	Right	Thru	Left	Right	Thru	Left	Int. Total
Factor	1.0	1.0	1.0	1.0	1.0	1.0	1.0	1.0	1.0	1.0	1.0	1.0	
07:00 AM	104	107	23	0	24	2	0	0	0	0	257	0	517
07:15 AM	127	118	45	0	37	4	0	0	0	2	310	0	643
07:30 AM	151	137	61	0	55	13	0	0	0	2	355	0	774
07:45 AM	178	161	75	0	60	17	0	0	0	6	407	0	904
Total	560	523	204	0	176	36	0	0	0	10	1329	0	2838
08:00 AM	187	176	77	0	67	19	0	0	0	8	421	0	955
08:15 AM	210	197	81	0	89	22	0	0	0	9	414	0	1022
08:30 AM	174	172	71	0	63	19	0	0	0	7	387	0	893
08:45 AM	168	174	62	0	67	21	0	0	0	8	377	0	877
Total	739	719	291	0	286	81	0	0	0	32	1599	0	3747
*** BREAK ***													
04:30 PM	309	219	144	0	53	14	0	0	0	7	170	0	916
04:45 PM	317	227	153	0	61	18	0	0	0	9	188	0	973
Total	626	446	297	0	114	32	0	0	0	16	358	0	1889
05:00 PM	290	213	139	0	52	20	0	0	0	11	200	0	925
05:15 PM	307	231	161	0	61	18	0	0	0	5	194	0	977
05:30 PM	316	240	137	0	59	21	0	0	0	11	183	0	967
05:45 PM	311	224	141	0	63	18	0	0	0	7	191	0	955
Total	1224	908	578	0	235	77	0	0	0	34	768	0	3824
06:00 PM	294	218	140	0	59	19	0	0	0	6	180	0	916
06:15 PM	275	208	127	0	51	16	0	0	0	5	167	0	849
Grand Total	3718	3022	1637	0	921	261	0	0	0	103	4401	0	14063
Apprch %	44.4	36.1	19.5	0	77.9	22.1	0	0	0	2.3	97.7	0	
Total %	26.4	21.5	11.6	0	6.5	1.9	0	0	0	0.7	31.3	0	

Transportation Studies, Inc.

2860 Walnut Avenue, Suite C
Tustin, CA. 92780

File Name : H0905023
Site Code : 00005059
Start Date : 5/6/2009
Page No : 2

	NEWPORT BOULEVARD Southbound				VICTORIA STREET Westbound				ONE WAY Northbound				VICTORIA STREET Eastbound				
Start Time	Right	Thru	Left	App. Total	Right	Thru	Left	App. Total	Right	Thru	Left	App. Total	Right	Thru	Left	App. Total	Int. Total
Peak Hour Analysis From 07:00 AM to 08:45 AM - Peak 1 of 1																	
Peak Hour for Entire Intersection Begins at 07:45 AM																	
07:45 AM	178	161	75	414	0	60	17	77	0	0	0	0	6	407	0	413	904
08:00 AM	187	176	77	440	0	67	19	86	0	0	0	0	8	**421**	0	**429**	955
08:15 AM	**210**	**197**	**81**	**488**	0	**89**	**22**	**111**	0	0	0	0	**9**	414	0	423	**1022**
08:30 AM	174	172	71	417	0	63	19	82	0	0	0	0	7	387	0	394	893
Total Volume	749	706	304	1759	0	279	77	356	0	0	0	0	30	1629	0	1659	3774
% App. Total	42.6	40.1	17.3		0	78.4	21.6		0	0	0		1.8	98.2	0		
PHF	.892	.896	.938	.901	.000	.784	.875	.802	.000	.000	.000	.000	.833	.967	.000	.967	.923

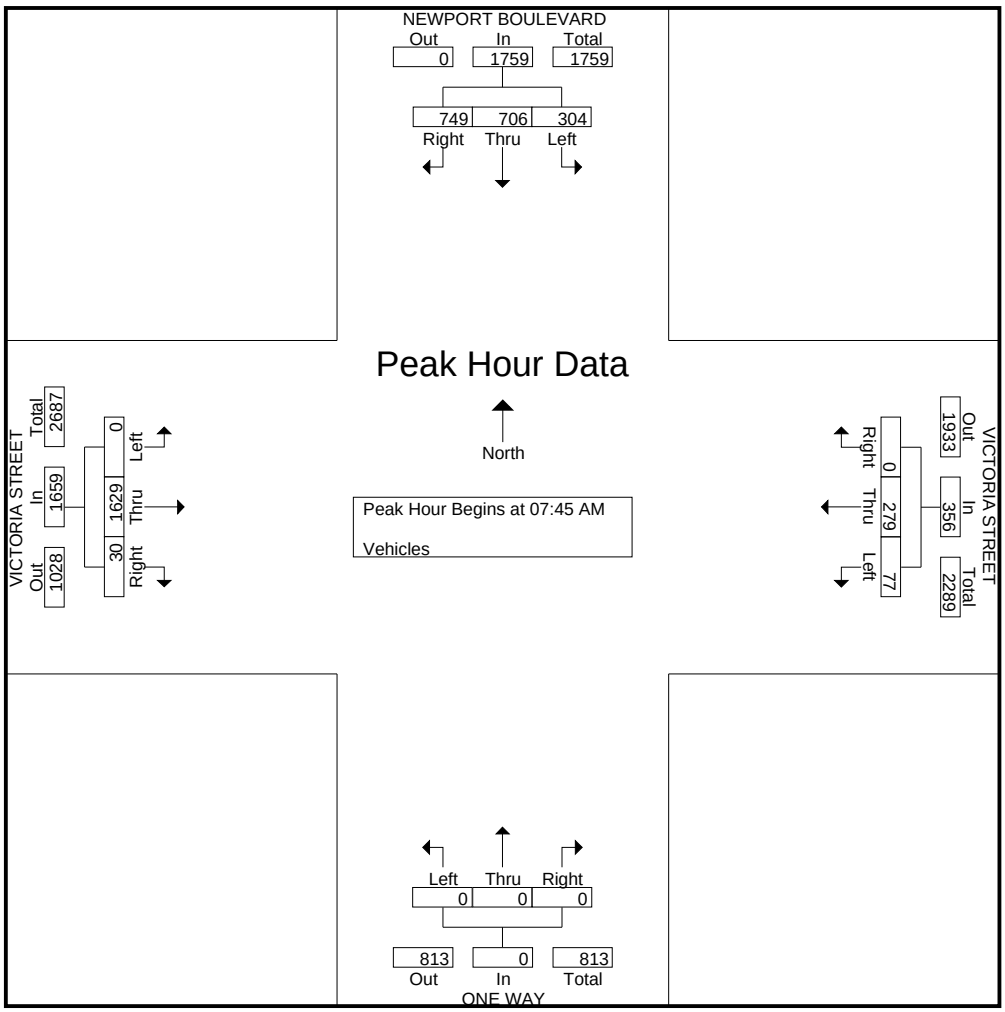

Transportation Studies, Inc.

2860 Walnut Avenue, Suite C
Tustin, CA. 92780

File Name : H0905023
Site Code : 00005059
Start Date : 5/6/2009
Page No : 3

	NEWPORT BOULEVARD Southbound				VICTORIA STREET Westbound				ONE WAY Northbound				VICTORIA STREET Eastbound				
Start Time	Right	Thru	Left	App. Total	Right	Thru	Left	App. Total	Right	Thru	Left	App. Total	Right	Thru	Left	App. Total	Int. Total
Peak Hour Analysis From 04:30 PM to 06:15 PM - Peak 1 of 1																	
Peak Hour for Entire Intersection Begins at 04:45 PM																	
04:45 PM	**317**	227	153	697	0	**61**	18	79	0	0	0	0	9	188	0	197	973
05:00 PM	290	213	139	642	0	52	20	72	0	0	0	0	**11**	**200**	0	**211**	925
05:15 PM	307	231	**161**	**699**	0	61	18	79	0	0	0	0	5	194	0	199	**977**
05:30 PM	316	**240**	137	693	0	59	**21**	**80**	0	0	0	0	11	183	0	194	967
Total Volume	1230	911	590	2731	0	233	77	310	0	0	0	0	36	765	0	801	3842
% App. Total	45	33.4	21.6		0	75.2	24.8		0	0	0		4.5	95.5	0		
PHF	.970	.949	.916	.977	.000	.955	.917	.969	.000	.000	.000	.000	.818	.956	.000	.949	.983

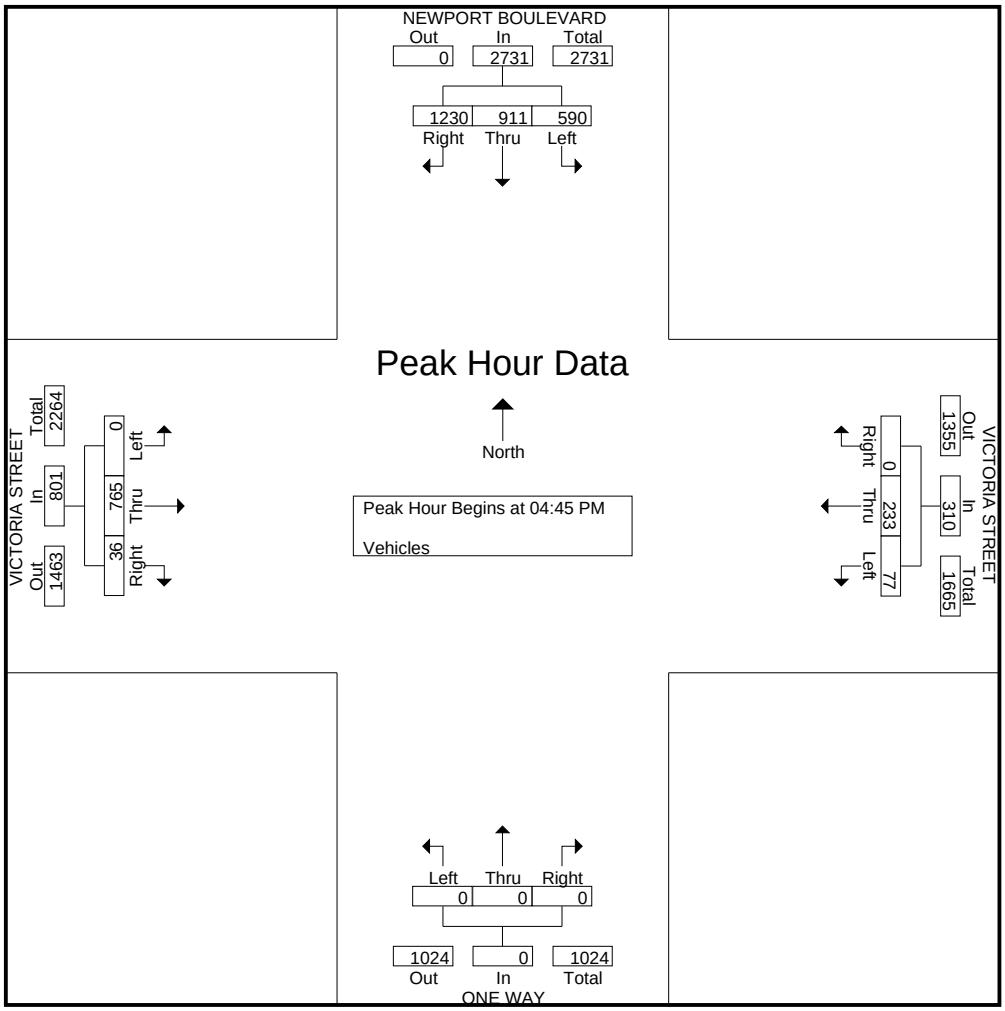

Transportation Studies, Inc.

2860 Walnut Avenue, Suite C
Tustin, CA. 92780

City: COSTA MESA
N-S Direction: NEWPORT BOULEVARD
E-W Direction: 22ND STREET

File Name : H0905024
Site Code : 00005054
Start Date : 5/6/2009
Page No : 1

Groups Printed- Vehicles

	ONE WAY Southbound			22ND STREET Westbound			NEWPORT BOULEVARD Northbound			22ND STREET Eastbound			
Start Time	Right	Thru	Left	Right	Thru	Left	Right	Thru	Left	Right	Thru	Left	Int. Total
Factor	1.0	1.0	1.0	1.0	1.0	1.0	1.0	1.0	1.0	1.0	1.0	1.0	
07:00 AM	0	0	0	26	22	0	2	101	4	0	25	248	428
07:15 AM	0	0	0	40	29	0	3	178	10	0	49	287	596
07:30 AM	0	0	0	62	41	0	5	256	13	0	67	349	793
07:45 AM	0	0	0	76	52	0	7	282	18	0	77	398	910
Total	0	0	0	204	144	0	17	817	45	0	218	1282	2727
08:00 AM	0	0	0	87	64	0	8	310	19	0	81	405	974
08:15 AM	0	0	0	83	79	0	9	312	29	0	84	400	996
08:30 AM	0	0	0	70	71	0	8	308	21	0	74	384	936
08:45 AM	0	0	0	63	64	0	9	297	21	0	69	367	890
Total	0	0	0	303	278	0	34	1227	90	0	308	1556	3796
*** BREAK ***													
04:30 PM	0	0	0	58	37	0	17	207	32	0	145	158	654
04:45 PM	0	0	0	51	40	0	19	222	37	0	154	178	701
Total	0	0	0	109	77	0	36	429	69	0	299	336	1355
05:00 PM	0	0	0	57	50	0	25	219	28	0	140	181	700
05:15 PM	0	0	0	51	59	0	21	237	20	0	150	197	735
05:30 PM	0	0	0	44	53	0	27	229	24	0	157	178	712
05:45 PM	0	0	0	41	57	0	22	237	21	0	151	171	700
Total	0	0	0	193	219	0	95	922	93	0	598	727	2847
06:00 PM	0	0	0	47	52	0	27	219	23	0	144	173	685
06:15 PM	0	0	0	46	50	0	29	221	21	0	143	161	671
Grand Total	0	0	0	902	820	0	238	3835	341	0	1710	4235	12081
Apprch %	0	0	0	52.4	47.6	0	5.4	86.9	7.7	0	28.8	71.2	
Total %	0	0	0	7.5	6.8	0	2	31.7	2.8	0	14.2	35.1	

Transportation Studies, Inc.

2860 Walnut Avenue, Suite C
Tustin, CA. 92780

File Name : H0905024
Site Code : 00005054
Start Date : 5/6/2009
Page No : 2

	ONE WAY Southbound				22ND STREET Westbound				NEWPORT BOULEVARD Northbound				22ND STREET Eastbound				
Start Time	Right	Thru	Left	App. Total	Right	Thru	Left	App. Total	Right	Thru	Left	App. Total	Right	Thru	Left	App. Total	Int. Total
Peak Hour Analysis From 07:00 AM to 08:45 AM - Peak 1 of 1																	
Peak Hour for Entire Intersection Begins at 07:45 AM																	
07:45 AM	0	0	0	0	76	52	0	128	7	282	18	307	0	77	398	475	910
08:00 AM	0	0	0	0	**87**	64	0	151	8	310	19	337	0	81	**405**	**486**	974
08:15 AM	0	0	0	0	83	**79**	0	**162**	**9**	**312**	**29**	**350**	0	**84**	400	484	**996**
08:30 AM	0	0	0	0	70	71	0	141	8	308	21	337	0	74	384	458	936
Total Volume	0	0	0	0	316	266	0	582	32	1212	87	1331	0	316	1587	1903	3816
% App. Total	0	0	0		54.3	45.7	0		2.4	91.1	6.5		0	16.6	83.4		
PHF	.000	.000	.000	.000	.908	.842	.000	.898	.889	.971	.750	.951	.000	.940	.980	.979	.958

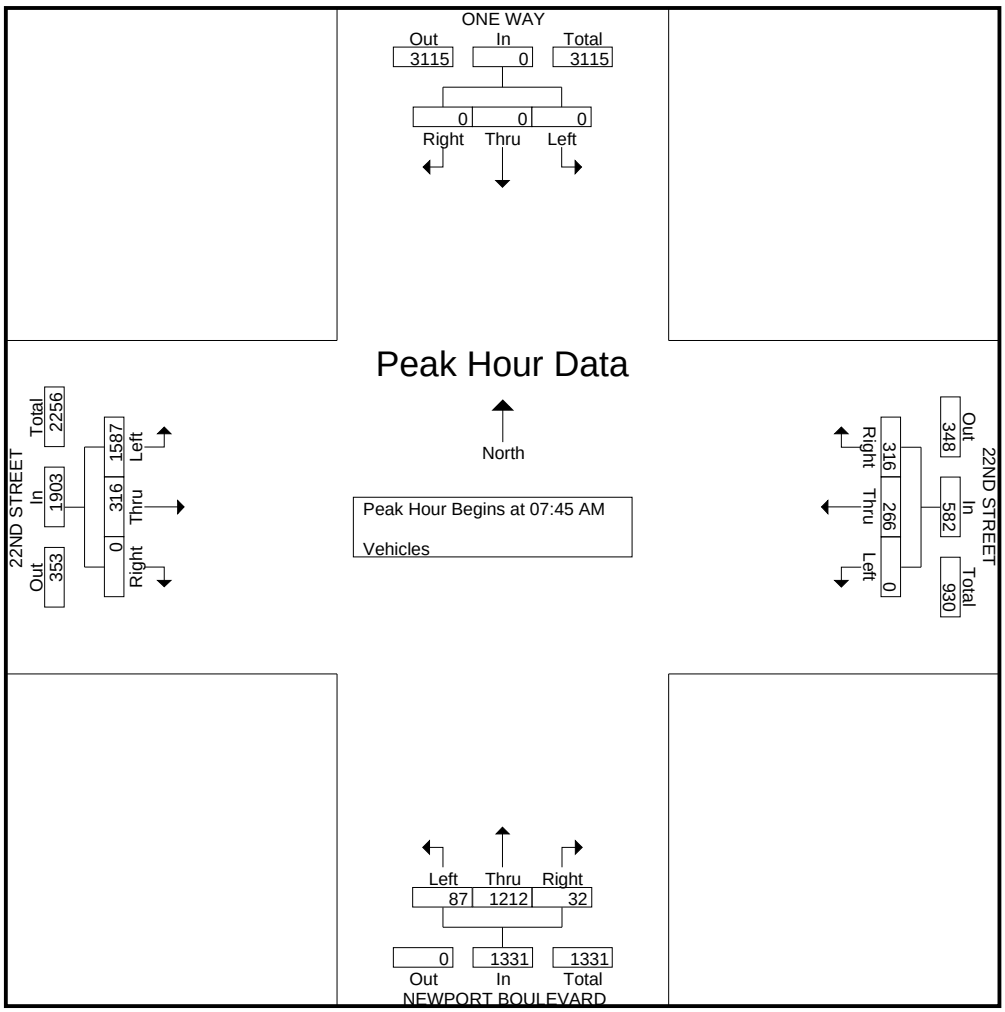

Transportation Studies, Inc.

2860 Walnut Avenue, Suite C
Tustin, CA. 92780

File Name : H0905024
Site Code : 00005054
Start Date : 5/6/2009
Page No : 3

	ONE WAY Southbound				22ND STREET Westbound				NEWPORT BOULEVARD Northbound				22ND STREET Eastbound				
Start Time	Right	Thru	Left	App. Total	Right	Thru	Left	App. Total	Right	Thru	Left	App. Total	Right	Thru	Left	App. Total	Int. Total
Peak Hour Analysis From 04:30 PM to 06:15 PM - Peak 1 of 1																	
Peak Hour for Entire Intersection Begins at 04:45 PM																	
04:45 PM	0	0	0	0	51	40	0	91	19	222	**37**	278	0	154	178	332	701
05:00 PM	0	0	0	0	**57**	50	0	107	25	219	28	272	0	140	181	321	700
05:15 PM	0	0	0	0	51	**59**	0	**110**	21	**237**	20	278	0	150	**197**	**347**	**735**
05:30 PM	0	0	0	0	44	53	0	97	**27**	229	24	**280**	0	**157**	178	335	712
Total Volume	0	0	0	0	203	202	0	405	92	907	109	1108	0	601	734	1335	2848
% App. Total	0	0	0		50.1	49.9	0		8.3	81.9	9.8		0	45	55		
PHF	.000	.000	.000	.000	.890	.856	.000	.920	.852	.957	.736	.989	.000	.957	.931	.962	.969

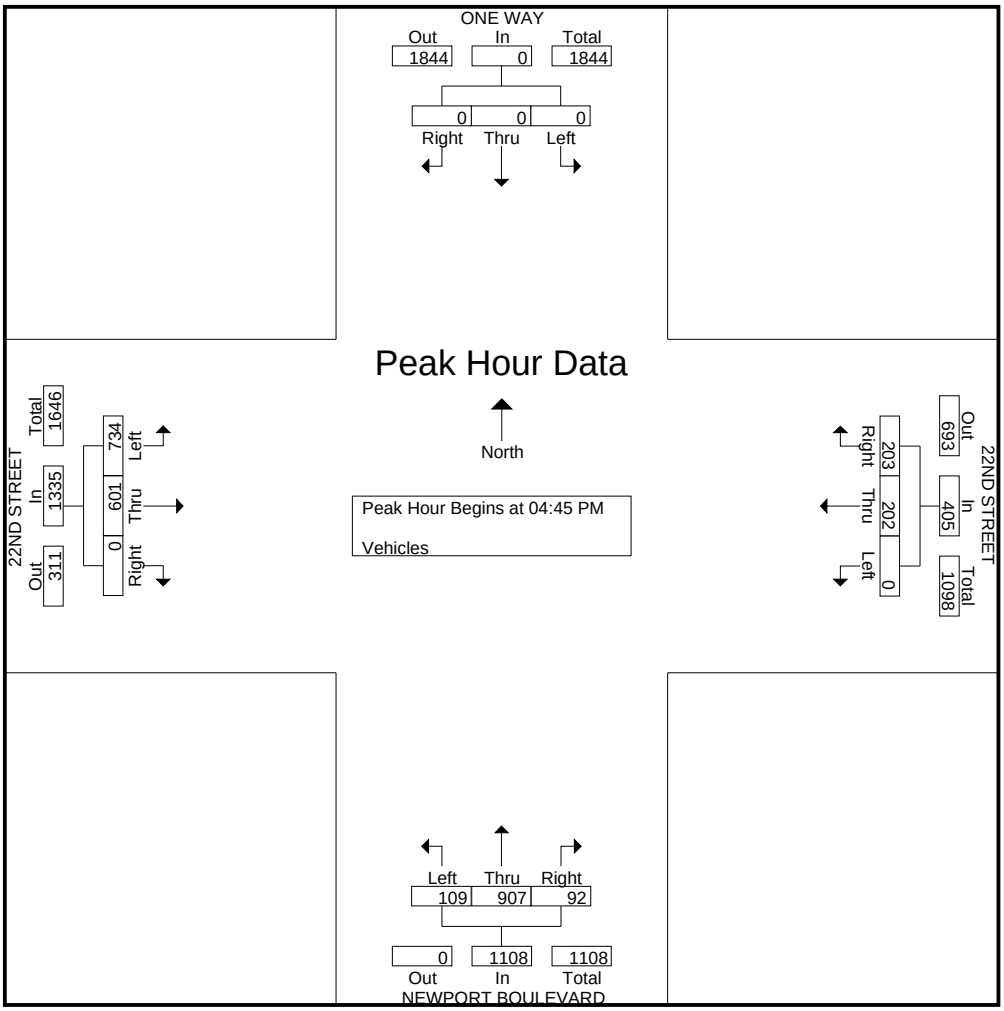

Transportation Studies, Inc.

2860 Walnut Avenue, Suite C
Tustin, CA. 92780

City: COSTA MESA
N-S Direction: WHITTIER AVENUE
E-W Direction: 19TH STREET

File Name : H0905006
Site Code : 00000000
Start Date : 4/29/2009
Page No : 1

Groups Printed- VEHICLES

	WHITTIER AVENUE Southbound			19TH STREET Westbound			WHITTIER AVENUE Northbound			19TH STREET Eastbound			
Start Time	Right	Thru	Left	Right	Thru	Left	Right	Thru	Left	Right	Thru	Left	Int. Total
Factor	1.0	1.0	1.0	1.0	1.0	1.0	1.0	1.0	1.0	1.0	1.0	1.0	
07:00 AM	0	0	1	1	6	32	21	0	1	2	23	0	87
07:15 AM	0	0	3	0	1	31	25	0	1	3	22	0	86
07:30 AM	0	1	0	1	7	54	58	0	0	3	30	0	154
07:45 AM	0	2	5	4	6	70	83	2	1	1	33	0	207
Total	0	3	9	6	20	187	187	2	3	9	108	0	534
08:00 AM	0	3	3	0	6	54	84	4	2	2	24	0	182
08:15 AM	0	0	2	5	10	32	33	0	2	1	36	1	122
08:30 AM	1	1	2	2	9	27	48	0	0	5	20	0	115
08:45 AM	0	2	5	1	13	24	25	0	4	2	28	0	104
Total	1	6	12	8	38	137	190	4	8	10	108	1	523
*** BREAK ***													
04:30 PM	0	0	1	1	25	26	37	1	2	3	9	0	105
04:45 PM	0	2	3	5	16	41	40	0	3	3	12	0	125
Total	0	2	4	6	41	67	77	1	5	6	21	0	230
05:00 PM	0	1	4	4	18	36	53	4	7	1	16	0	144
05:15 PM	0	1	5	8	36	33	45	1	14	6	15	1	165
05:30 PM	0	0	5	1	27	36	37	1	8	1	23	0	139
05:45 PM	0	1	3	4	27	20	21	0	5	3	15	0	99
Total	0	3	17	17	108	125	156	6	34	11	69	1	547
06:00 PM	1	0	2	4	29	23	28	1	5	1	7	2	103
06:15 PM	0	0	1	5	24	22	29	1	7	5	15	2	111
Grand Total	2	14	45	46	260	561	667	15	62	42	328	6	2048
Apprch %	3.3	23	73.8	5.3	30	64.7	89.7	2	8.3	11.2	87.2	1.6	
Total %	0.1	0.7	2.2	2.2	12.7	27.4	32.6	0.7	3	2.1	16	0.3	

Transportation Studies, Inc.

2860 Walnut Avenue, Suite C
Tustin, CA. 92780

File Name : H0905006
Site Code : 00000000
Start Date : 4/29/2009
Page No : 2

	WHITTIER AVENUE Southbound				19TH STREET Westbound				WHITTIER AVENUE Northbound				19TH STREET Eastbound				
Start Time	Right	Thru	Left	App. Total	Right	Thru	Left	App. Total	Right	Thru	Left	App. Total	Right	Thru	Left	App. Total	Int. Total
Peak Hour Analysis From 07:00 AM to 08:45 AM - Peak 1 of 1																	
Peak Hour for Entire Intersection Begins at 07:30 AM																	
07:30 AM	0	1	0	1	1	7	54	62	58	0	0	58	**3**	30	0	33	154
07:45 AM	0	2	**5**	**7**	4	6	**70**	**80**	83	2	1	86	1	33	0	34	**207**
08:00 AM	0	**3**	3	6	0	6	54	60	**84**	**4**	**2**	**90**	2	24	0	26	182
08:15 AM	0	0	2	2	**5**	**10**	32	47	33	0	2	35	1	**36**	**1**	**38**	122
Total Volume	0	6	10	16	10	29	210	249	258	6	5	269	7	123	1	131	665
% App. Total	0	37.5	62.5		4	11.6	84.3		95.9	2.2	1.9		5.3	93.9	0.8		
PHF	.000	.500	.500	.571	.500	.725	.750	.778	.768	.375	.625	.747	.583	.854	.250	.862	.803

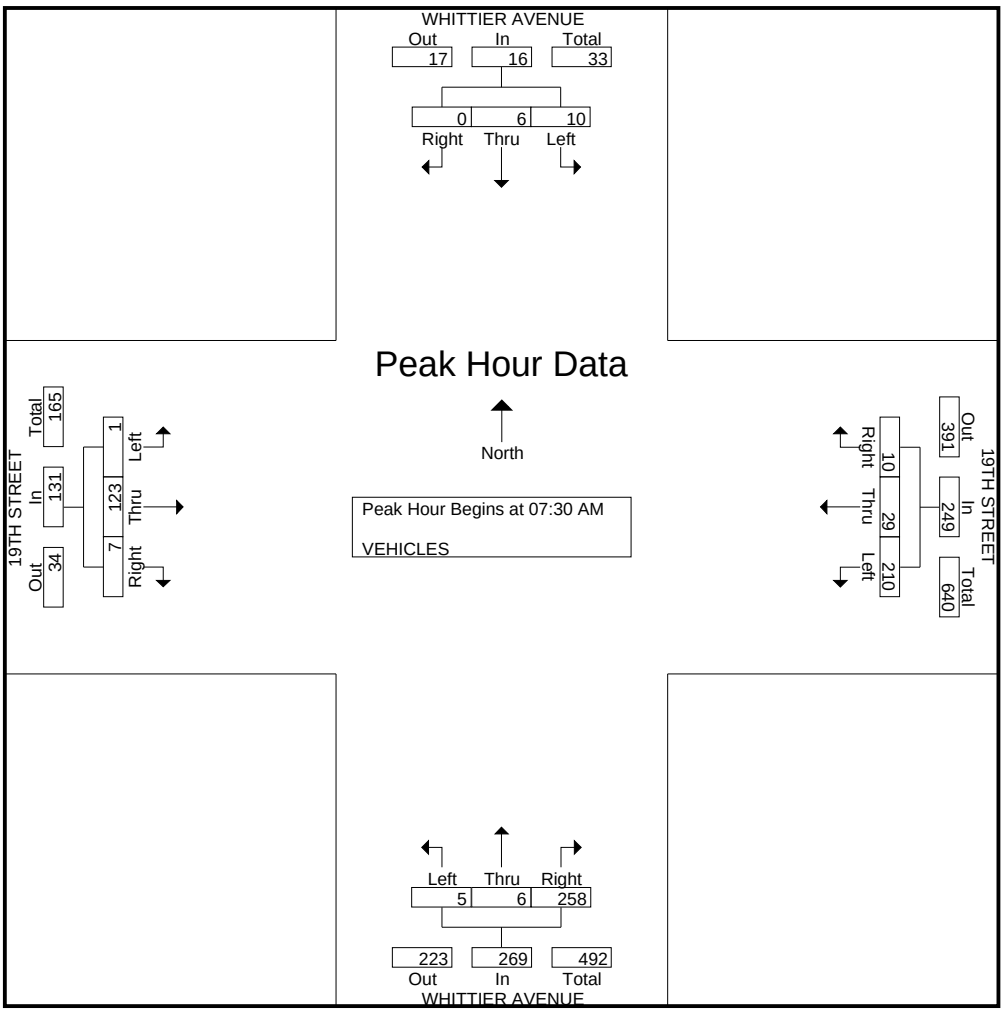

Transportation Studies, Inc.

2860 Walnut Avenue, Suite C
Tustin, CA. 92780

File Name : H0905006
Site Code : 00000000
Start Date : 4/29/2009
Page No : 3

	WHITTIER AVENUE Southbound				19TH STREET Westbound				WHITTIER AVENUE Northbound				19TH STREET Eastbound				
Start Time	Right	Thru	Left	App. Total	Right	Thru	Left	App. Total	Right	Thru	Left	App. Total	Right	Thru	Left	App. Total	Int. Total
Peak Hour Analysis From 04:30 PM to 06:15 PM - Peak 1 of 1																	
Peak Hour for Entire Intersection Begins at 04:45 PM																	
04:45 PM	0	**2**	3	5	5	16	**41**	62	40	0	3	43	3	12	0	15	125
05:00 PM	0	1	4	5	4	18	36	58	**53**	**4**	7	**64**	1	16	0	17	144
05:15 PM	0	1	**5**	**6**	**8**	**36**	33	**77**	45	1	**14**	60	**6**	15	**1**	22	**165**
05:30 PM	0	0	5	5	1	27	36	64	37	1	8	46	1	**23**	0	**24**	139
Total Volume	0	4	17	21	18	97	146	261	175	6	32	213	11	66	1	78	573
% App. Total	0	19	81		6.9	37.2	55.9		82.2	2.8	15		14.1	84.6	1.3		
PHF	.000	.500	.850	.875	.563	.674	.890	.847	.825	.375	.571	.832	.458	.717	.250	.813	.868

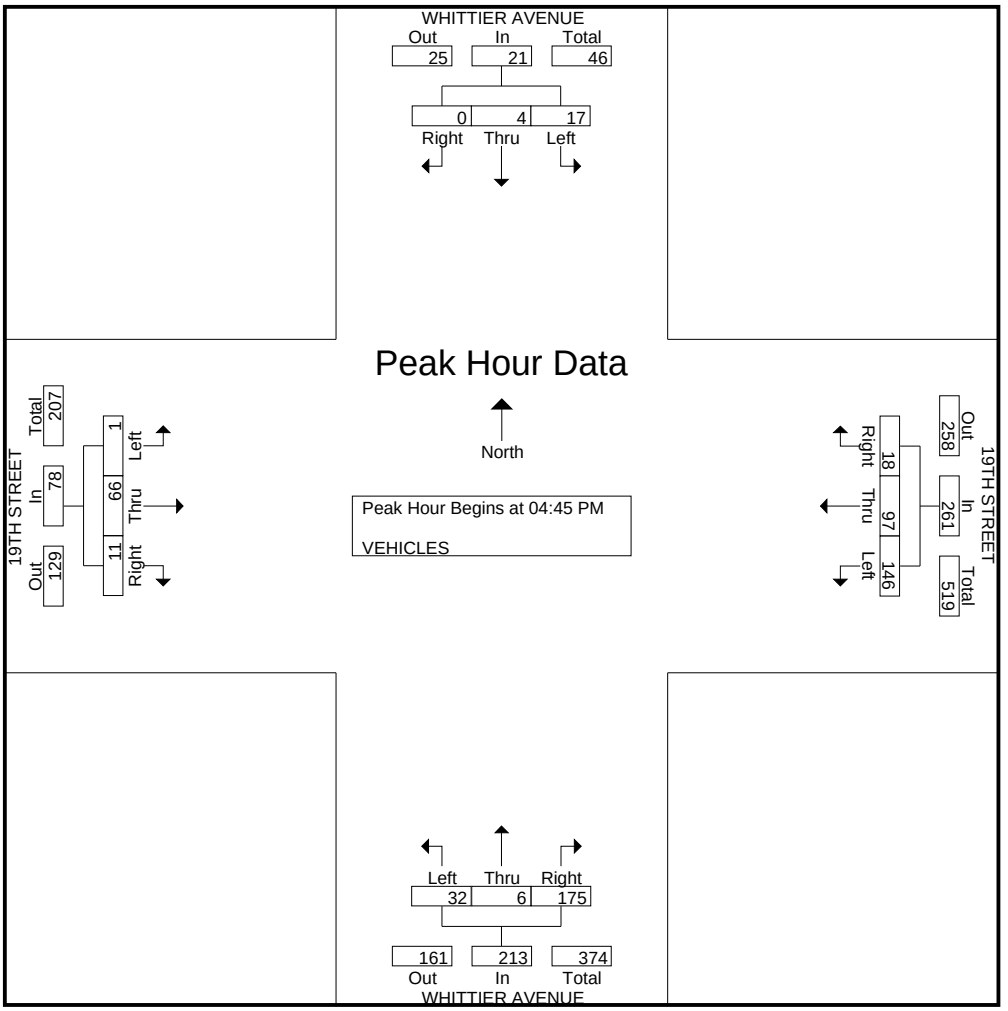

Transportation Studies, Inc.

2860 Walnut Avenue, Suite C
Tustin, CA. 92780

City: COSTA MESA
N-S Direction: MONROVIA AVENUE
E-W Direction: 19TH STREET

File Name : H0905005
Site Code : 00000000
Start Date : 4/28/2009
Page No : 1

Groups Printed- VEHICLES

	MONROVIA AVENUE Southbound			19TH STREET Westbound			MONROVIA AVENUE Northbound			19TH STREET Eastbound			
Start Time	Right	Thru	Left	Right	Thru	Left	Right	Thru	Left	Right	Thru	Left	Int. Total
Factor	1.0	1.0	1.0	1.0	1.0	1.0	1.0	1.0	1.0	1.0	1.0	1.0	
07:00 AM	0	4	13	5	33	26	26	1	1	3	38	0	150
07:15 AM	0	1	15	5	34	28	36	0	1	3	40	0	163
07:30 AM	0	6	21	2	40	25	26	1	4	3	108	0	236
07:45 AM	0	1	21	9	59	40	52	3	18	12	97	3	315
Total	0	12	70	21	166	119	140	5	24	21	283	3	864
08:00 AM	0	6	20	11	69	45	46	3	6	13	110	1	330
08:15 AM	1	6	17	8	45	44	38	3	3	6	88	0	259
08:30 AM	3	3	17	6	51	26	40	1	0	1	66	1	215
08:45 AM	1	1	14	14	39	28	31	0	1	2	64	0	195
Total	5	16	68	39	204	143	155	7	10	22	328	2	999
*** BREAK ***													
04:30 PM	0	3	12	10	57	22	74	10	3	3	65	1	260
04:45 PM	2	4	13	14	71	32	52	3	5	2	57	1	256
Total	2	7	25	24	128	54	126	13	8	5	122	2	516
05:00 PM	0	1	9	17	62	30	67	4	3	2	72	2	269
05:15 PM	1	1	16	9	65	40	50	8	3	2	65	2	262
05:30 PM	1	7	16	17	58	31	64	3	3	0	51	3	254
05:45 PM	0	4	11	17	58	26	35	6	5	1	50	2	215
Total	2	13	52	60	243	127	216	21	14	5	238	9	1000
06:00 PM	0	3	12	18	61	33	40	3	4	1	54	0	229
06:15 PM	2	0	10	16	69	26	42	3	3	2	35	1	209
Grand Total	11	51	237	178	871	502	719	52	63	56	1060	17	3817
Apprch %	3.7	17.1	79.3	11.5	56.2	32.4	86.2	6.2	7.6	4.9	93.6	1.5	
Total %	0.3	1.3	6.2	4.7	22.8	13.2	18.8	1.4	1.7	1.5	27.8	0.4	

Transportation Studies, Inc.

2860 Walnut Avenue, Suite C
Tustin, CA. 92780

File Name : H0905005
Site Code : 00000000
Start Date : 4/28/2009
Page No : 2

	MONROVIA AVENUE Southbound				19TH STREET Westbound				MONROVIA AVENUE Northbound				19TH STREET Eastbound				
Start Time	Right	Thru	Left	App. Total	Right	Thru	Left	App. Total	Right	Thru	Left	App. Total	Right	Thru	Left	App. Total	Int. Total
Peak Hour Analysis From 07:00 AM to 08:45 AM - Peak 1 of 1																	
Peak Hour for Entire Intersection Begins at 07:30 AM																	
07:30 AM	0	**6**	**21**	**27**	2	40	25	67	26	1	4	31	3	108	0	111	236
07:45 AM	0	1	21	22	9	59	40	108	**52**	**3**	**18**	**73**	12	97	**3**	112	315
08:00 AM	0	6	20	26	**11**	**69**	**45**	**125**	46	3	6	55	**13**	**110**	1	**124**	**330**
08:15 AM	**1**	6	17	24	8	45	44	97	38	3	3	44	6	88	0	94	259
Total Volume	1	19	79	99	30	213	154	397	162	10	31	203	34	403	4	441	1140
% App. Total	1	19.2	79.8		7.6	53.7	38.8		79.8	4.9	15.3		7.7	91.4	0.9		
PHF	.250	.792	.940	.917	.682	.772	.856	.794	.779	.833	.431	.695	.654	.916	.333	.889	.864

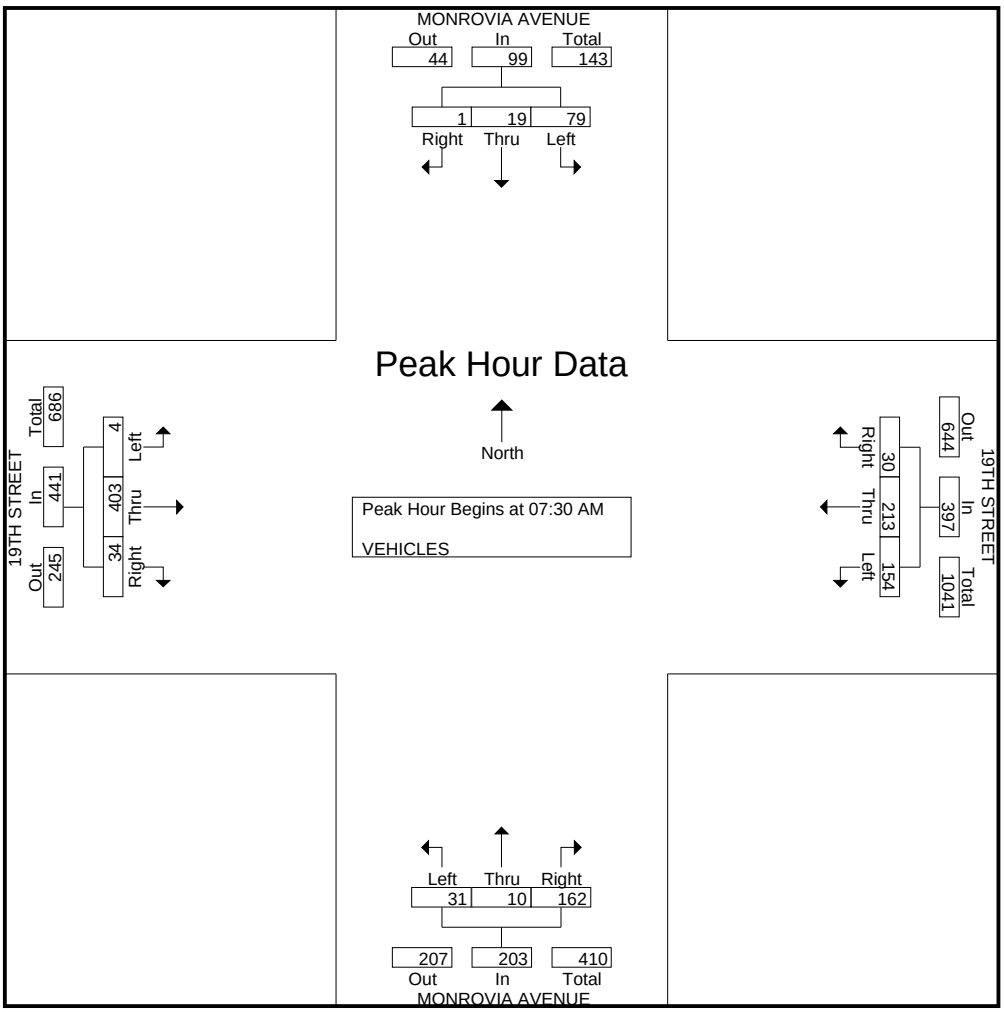

Transportation Studies, Inc.

2860 Walnut Avenue, Suite C
Tustin, CA. 92780

File Name : H0905005
Site Code : 00000000
Start Date : 4/28/2009
Page No : 3

	MONROVIA AVENUE Southbound				19TH STREET Westbound				MONROVIA AVENUE Northbound				19TH STREET Eastbound				
Start Time	Right	Thru	Left	App. Total	Right	Thru	Left	App. Total	Right	Thru	Left	App. Total	Right	Thru	Left	App. Total	Int. Total
Peak Hour Analysis From 04:30 PM to 06:15 PM - Peak 1 of 1																	
Peak Hour for Entire Intersection Begins at 04:30 PM																	
04:30 PM	0	3	12	15	10	57	22	89	**74**	**10**	3	**87**	**3**	65	1	69	260
04:45 PM	**2**	**4**	13	**19**	14	**71**	32	**117**	52	3	**5**	60	2	57	1	60	256
05:00 PM	0	1	9	10	**17**	62	30	109	67	4	3	74	2	**72**	**2**	**76**	**269**
05:15 PM	1	1	**16**	18	9	65	**40**	114	50	8	3	61	2	65	2	69	262
Total Volume	3	9	50	62	50	255	124	429	243	25	14	282	9	259	6	274	1047
% App. Total	4.8	14.5	80.6		11.7	59.4	28.9		86.2	8.9	5		3.3	94.5	2.2		
PHF	.375	.563	.781	.816	.735	.898	.775	.917	.821	.625	.700	.810	.750	.899	.750	.901	.973

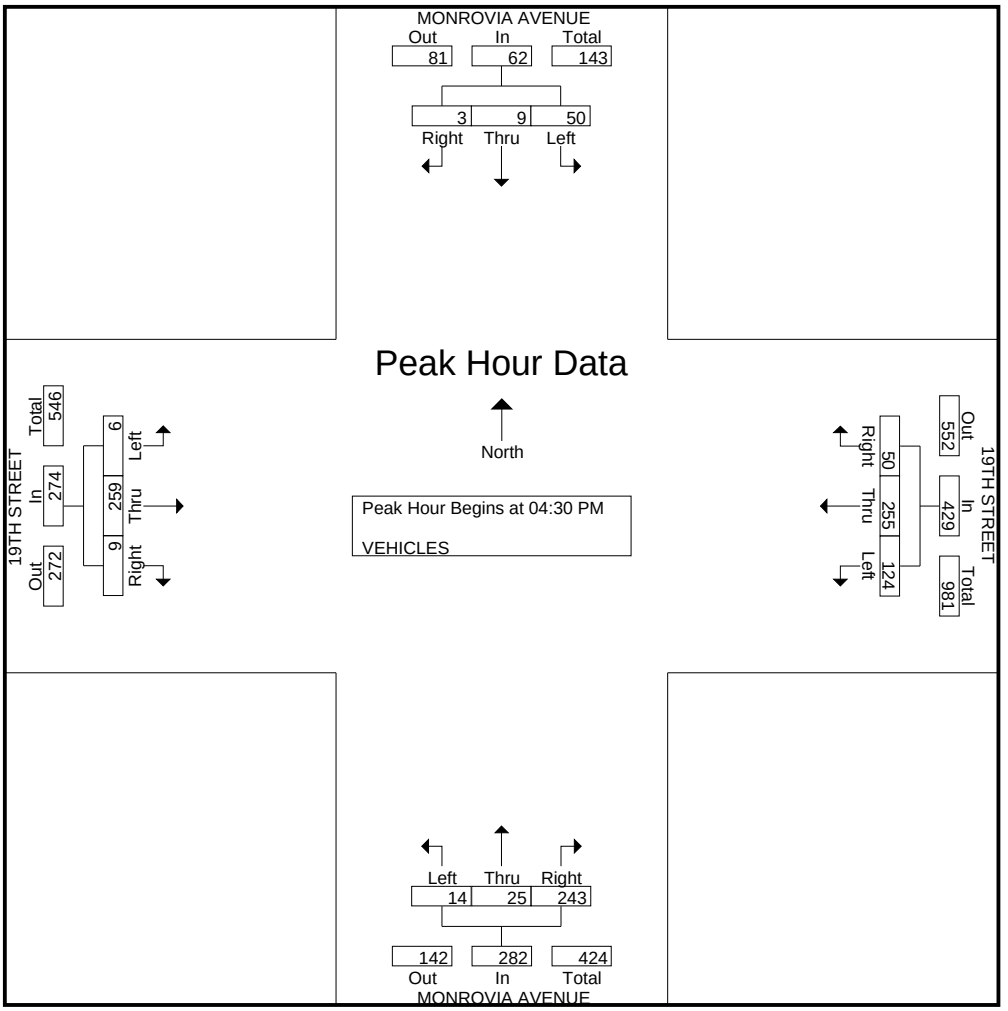

Transportation Studies, Inc.

2860 Walnut Avenue, Suite C
Tustin, CA. 92780

City: COSTA MESA
N-S Direction: PLACENTIA AVENUE
E-W Direction: 19TH STREET

File Name : H0905002
Site Code : 00005059
Start Date : 5/7/2009
Page No : 1

Groups Printed- Vehicles

	PLACENTIA AVENUE Southbound			19TH STREET Westbound			PLACENTIA AVENUE Northbound			19TH STREET Eastbound			
Start Time	Right	Thru	Left	Right	Thru	Left	Right	Thru	Left	Right	Thru	Left	Int. Total
Factor	1.0	1.0	1.0	1.0	1.0	1.0	1.0	1.0	1.0	1.0	1.0	1.0	
07:00 AM	27	121	8	21	44	30	27	36	2	3	78	30	427
07:15 AM	25	109	13	22	65	44	33	64	6	6	91	38	516
07:30 AM	28	118	20	31	71	49	47	81	6	7	129	46	633
07:45 AM	21	122	29	38	81	53	54	104	7	6	137	50	702
Total	101	470	70	112	261	176	161	285	21	22	435	164	2278
08:00 AM	31	131	36	40	87	56	55	107	8	8	151	51	761
08:15 AM	35	128	39	42	83	57	56	104	9	10	149	49	761
08:30 AM	28	114	36	45	77	53	52	97	7	9	145	51	714
08:45 AM	29	119	38	40	73	47	46	91	8	7	139	52	689
Total	123	492	149	167	320	213	209	399	32	34	584	203	2925
*** BREAK ***													
04:30 PM	57	128	46	62	106	45	65	200	10	13	128	83	943
04:45 PM	49	133	52	69	111	57	60	218	12	14	144	71	990
Total	106	261	98	131	217	102	125	418	22	27	272	154	1933
05:00 PM	60	137	53	77	101	58	68	215	18	17	151	86	1041
05:15 PM	61	144	49	68	93	64	61	211	10	14	148	70	993
05:30 PM	51	151	52	67	100	69	57	219	9	11	157	79	1022
05:45 PM	64	141	48	70	107	61	61	222	10	12	141	42	979
Total	236	573	202	282	401	252	247	867	47	54	597	277	4035
06:00 PM	57	138	49	62	130	65	51	224	14	16	151	69	1026
06:15 PM	51	131	41	50	117	49	48	190	11	12	128	66	894
Grand Total	674	2065	609	804	1446	857	841	2383	147	165	2167	933	13091
Apprch %	20.1	61.7	18.2	25.9	46.5	27.6	24.9	70.7	4.4	5.1	66.4	28.6	
Total %	5.1	15.8	4.7	6.1	11	6.5	6.4	18.2	1.1	1.3	16.6	7.1	

Transportation Studies, Inc.

2860 Walnut Avenue, Suite C
Tustin, CA. 92780

File Name : H0905002
Site Code : 00005059
Start Date : 5/7/2009
Page No : 2

	PLACENTIA AVENUE Southbound				19TH STREET Westbound				PLACENTIA AVENUE Northbound				19TH STREET Eastbound				
Start Time	Right	Thru	Left	App. Total	Right	Thru	Left	App. Total	Right	Thru	Left	App. Total	Right	Thru	Left	App. Total	Int. Total
Peak Hour Analysis From 07:00 AM to 08:45 AM - Peak 1 of 1																	
Peak Hour for Entire Intersection Begins at 07:45 AM																	
07:45 AM	21	122	29	172	38	81	53	172	54	104	7	165	6	137	50	193	702
08:00 AM	31	**131**	36	198	40	**87**	56	**183**	55	**107**	8	**170**	8	**151**	**51**	**210**	**761**
08:15 AM	**35**	128	**39**	**202**	42	83	**57**	182	**56**	104	**9**	169	**10**	149	49	208	761
08:30 AM	28	114	36	178	**45**	77	53	175	52	97	7	156	9	145	51	205	714
Total Volume	115	495	140	750	165	328	219	712	217	412	31	660	33	582	201	816	2938
% App. Total	15.3	66	18.7		23.2	46.1	30.8		32.9	62.4	4.7		4	71.3	24.6		
PHF	.821	.945	.897	.928	.917	.943	.961	.973	.969	.963	.861	.971	.825	.964	.985	.971	.965

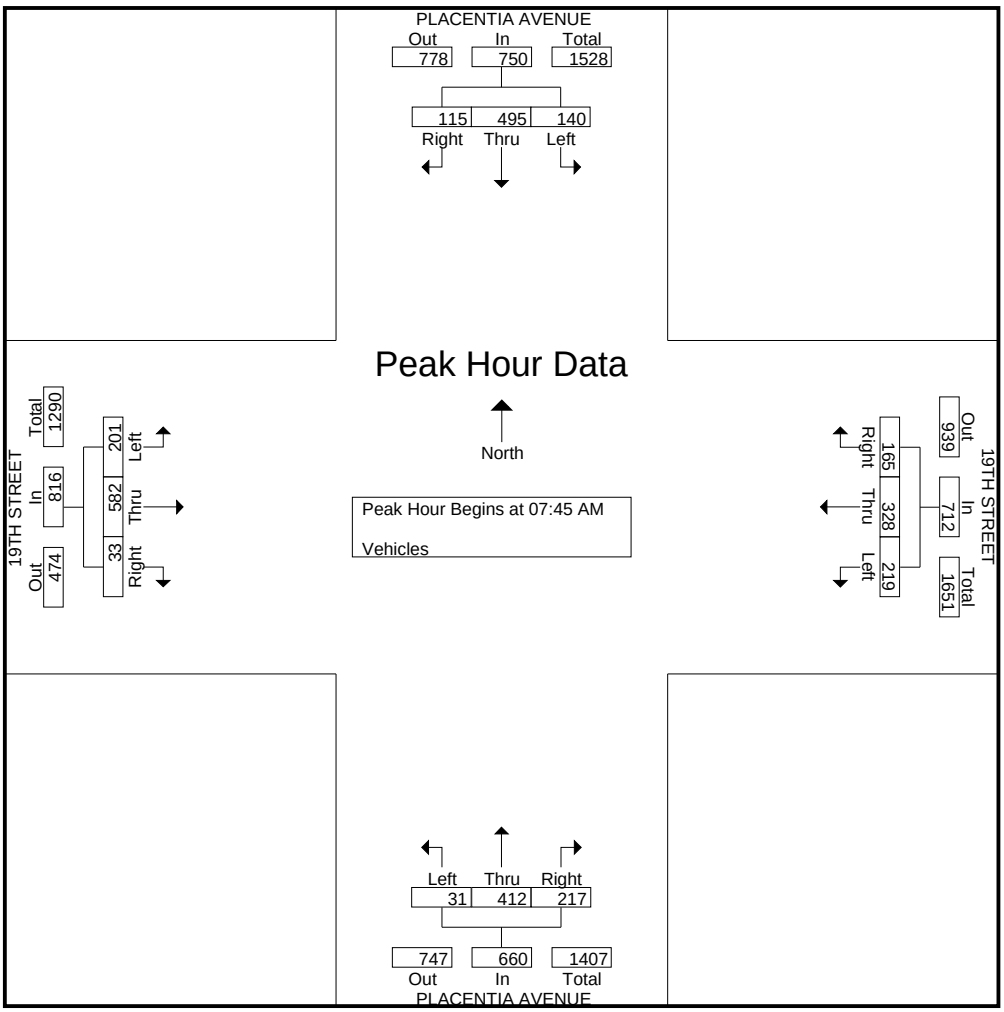

Transportation Studies, Inc.

2860 Walnut Avenue, Suite C
Tustin, CA. 92780

File Name : H0905002
Site Code : 00005059
Start Date : 5/7/2009
Page No : 3

	PLACENTIA AVENUE Southbound				19TH STREET Westbound				PLACENTIA AVENUE Northbound				19TH STREET Eastbound				
Start Time	Right	Thru	Left	App. Total	Right	Thru	Left	App. Total	Right	Thru	Left	App. Total	Right	Thru	Left	App. Total	Int. Total
Peak Hour Analysis From 04:30 PM to 06:15 PM - Peak 1 of 1																	
Peak Hour for Entire Intersection Begins at 04:45 PM																	
04:45 PM	49	133	52	234	69	**111**	57	**237**	60	218	12	290	14	144	71	229	990
05:00 PM	60	137	**53**	250	**77**	101	58	236	**68**	215	**18**	**301**	**17**	151	**86**	**254**	**1041**
05:15 PM	**61**	144	49	**254**	68	93	64	225	61	211	10	282	14	148	70	232	993
05:30 PM	51	**151**	52	254	67	100	**69**	236	57	**219**	9	285	11	**157**	79	247	1022
Total Volume	221	565	206	992	281	405	248	934	246	863	49	1158	56	600	306	962	4046
% App. Total	22.3	57	20.8		30.1	43.4	26.6		21.2	74.5	4.2		5.8	62.4	31.8		
PHF	.906	.935	.972	.976	.912	.912	.899	.985	.904	.985	.681	.962	.824	.955	.890	.947	.972

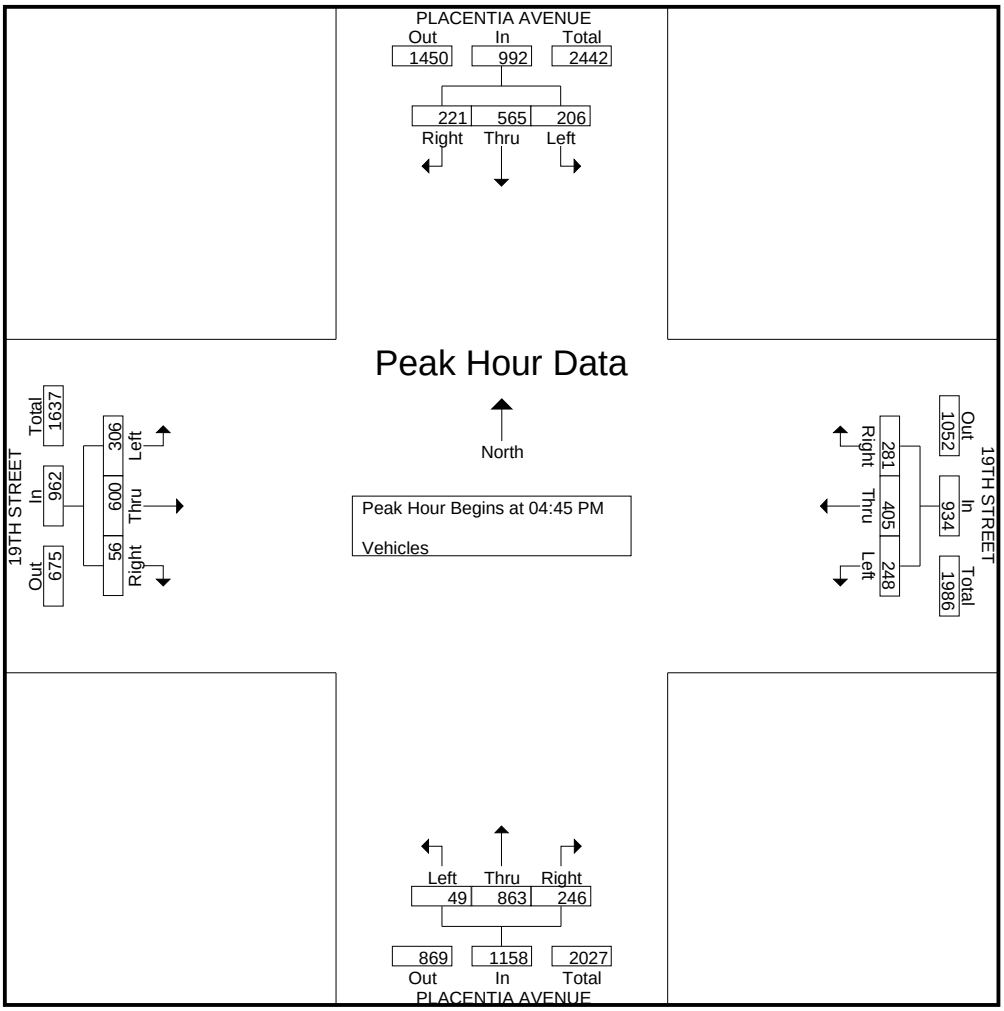

Transportation Studies, Inc.

2860 Walnut Avenue, Suite C
Tustin, CA. 92780

City: COSTA MESA
N-S Direction: POMONA AVENUE
E-W Direction: 19TH STREET

File Name : H0905007
Site Code : 00000000
Start Date : 4/28/2009
Page No : 1

Groups Printed- VEHICLES

	POMONA AVENUE Southbound			19TH STREET Westbound			POMONA AVENUE Northbound			19TH STREET Eastbound			
Start Time	Right	Thru	Left	Right	Thru	Left	Right	Thru	Left	Right	Thru	Left	Int. Total
Factor	1.0	1.0	1.0	1.0	1.0	1.0	1.0	1.0	1.0	1.0	1.0	1.0	
07:00 AM	7	28	10	6	101	12	13	11	4	5	126	5	328
07:15 AM	6	28	11	4	94	10	12	9	5	5	131	4	319
07:30 AM	9	20	23	12	114	23	13	19	7	5	202	7	454
07:45 AM	12	30	14	11	136	19	17	14	6	10	207	15	491
Total	34	106	58	33	445	64	55	53	22	25	666	31	1592
08:00 AM	6	27	13	10	160	20	19	29	9	12	206	9	520
08:15 AM	8	18	13	1	174	31	21	20	14	8	217	7	532
08:30 AM	10	19	12	4	145	34	14	12	7	9	217	7	490
08:45 AM	8	17	8	5	144	18	17	9	3	7	218	1	455
Total	32	81	46	20	623	103	71	70	33	36	858	24	1997
*** BREAK ***													
04:30 PM	15	16	13	12	188	29	27	24	20	13	218	21	596
04:45 PM	9	24	14	14	206	36	28	32	15	10	198	12	598
Total	24	40	27	26	394	65	55	56	35	23	416	33	1194
05:00 PM	11	27	18	24	199	34	32	34	14	13	227	9	642
05:15 PM	18	21	14	12	219	34	27	28	13	13	227	13	639
05:30 PM	14	28	13	13	200	26	28	31	11	9	231	7	611
05:45 PM	12	22	18	10	191	33	23	32	12	12	237	11	613
Total	55	98	63	59	809	127	110	125	50	47	922	40	2505
06:00 PM	15	25	11	11	180	37	22	27	10	10	201	7	556
06:15 PM	12	16	15	7	191	28	22	27	15	3	207	10	553
Grand Total	172	366	220	156	2642	424	335	358	165	144	3270	145	8397
Apprch %	22.7	48.3	29	4.8	82	13.2	39	41.7	19.2	4	91.9	4.1	
Total %	2	4.4	2.6	1.9	31.5	5	4	4.3	2	1.7	38.9	1.7	

Transportation Studies, Inc.

2860 Walnut Avenue, Suite C
Tustin, CA. 92780

File Name : H0905007
Site Code : 00000000
Start Date : 4/28/2009
Page No : 2

	POMONA AVENUE Southbound				19TH STREET Westbound				POMONA AVENUE Northbound				19TH STREET Eastbound				
Start Time	Right	Thru	Left	App. Total	Right	Thru	Left	App. Total	Right	Thru	Left	App. Total	Right	Thru	Left	App. Total	Int. Total
Peak Hour Analysis From 07:00 AM to 08:45 AM - Peak 1 of 1																	
Peak Hour for Entire Intersection Begins at 07:45 AM																	
07:45 AM	**12**	**30**	**14**	**56**	**11**	136	19	166	17	14	6	37	10	207	**15**	232	491
08:00 AM	6	27	13	46	10	160	20	190	19	**29**	9	**57**	**12**	206	9	227	520
08:15 AM	8	18	13	39	1	**174**	31	**206**	**21**	20	**14**	55	8	**217**	7	232	**532**
08:30 AM	10	19	12	41	4	145	**34**	183	14	12	7	33	9	217	7	**233**	490
Total Volume	36	94	52	182	26	615	104	745	71	75	36	182	39	847	38	924	2033
% App. Total	19.8	51.6	28.6		3.5	82.6	14		39	41.2	19.8		4.2	91.7	4.1		
PHF	.750	.783	.929	.813	.591	.884	.765	.904	.845	.647	.643	.798	.813	.976	.633	.991	.955

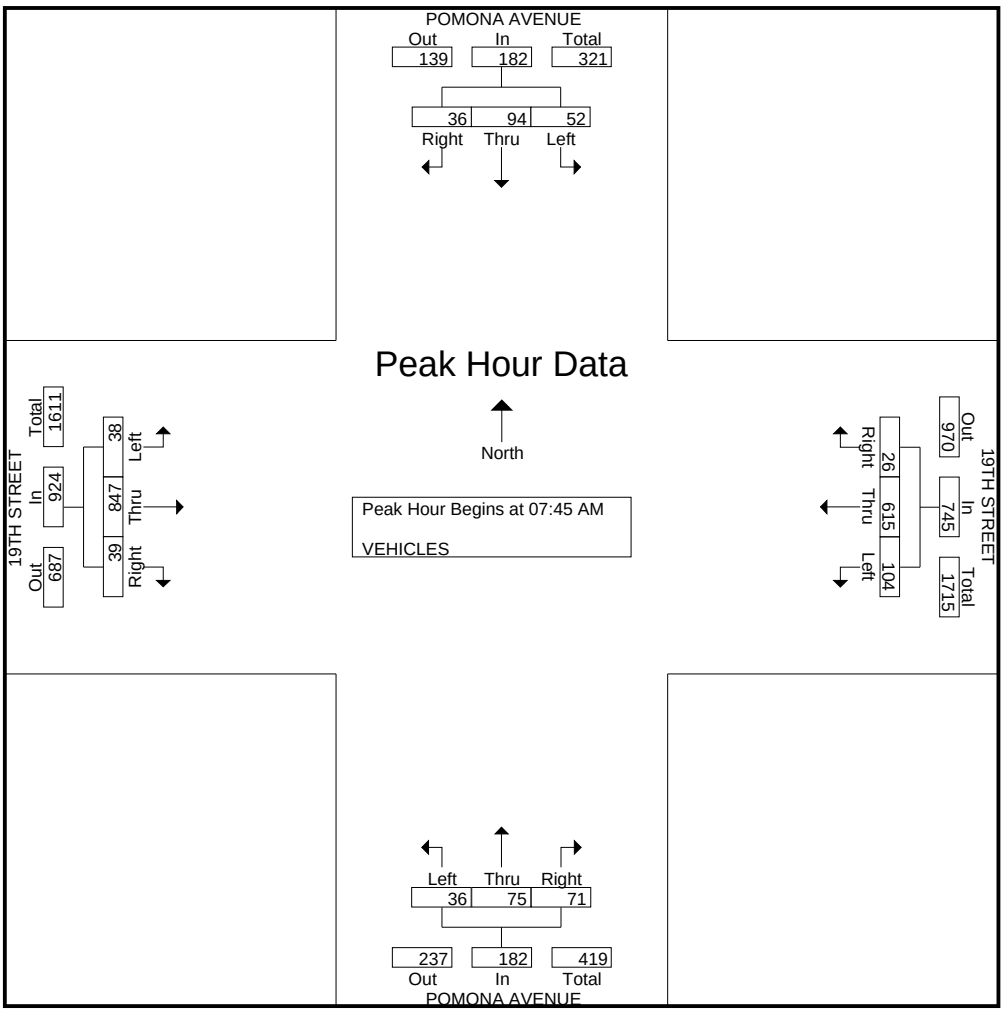

Transportation Studies, Inc.

2860 Walnut Avenue, Suite C
Tustin, CA. 92780

File Name : H0905007
Site Code : 00000000
Start Date : 4/28/2009
Page No : 3

	POMONA AVENUE Southbound				19TH STREET Westbound				POMONA AVENUE Northbound				19TH STREET Eastbound				
Start Time	Right	Thru	Left	App. Total	Right	Thru	Left	App. Total	Right	Thru	Left	App. Total	Right	Thru	Left	App. Total	Int. Total
Peak Hour Analysis From 04:30 PM to 06:15 PM - Peak 1 of 1																	
Peak Hour for Entire Intersection Begins at 05:00 PM																	
05:00 PM	11	27	**18**	**56**	**24**	199	**34**	257	**32**	**34**	**14**	**80**	**13**	227	9	249	**642**
05:15 PM	**18**	21	14	53	12	**219**	34	**265**	27	28	13	68	13	227	**13**	253	639
05:30 PM	14	**28**	13	55	13	200	26	239	28	31	11	70	9	231	7	247	611
05:45 PM	12	22	18	52	10	191	33	234	23	32	12	67	12	**237**	11	**260**	613
Total Volume	55	98	63	216	59	809	127	995	110	125	50	285	47	922	40	1009	2505
% App. Total	25.5	45.4	29.2		5.9	81.3	12.8		38.6	43.9	17.5		4.7	91.4	4		
PHF	.764	.875	.875	.964	.615	.924	.934	.939	.859	.919	.893	.891	.904	.973	.769	.970	.975

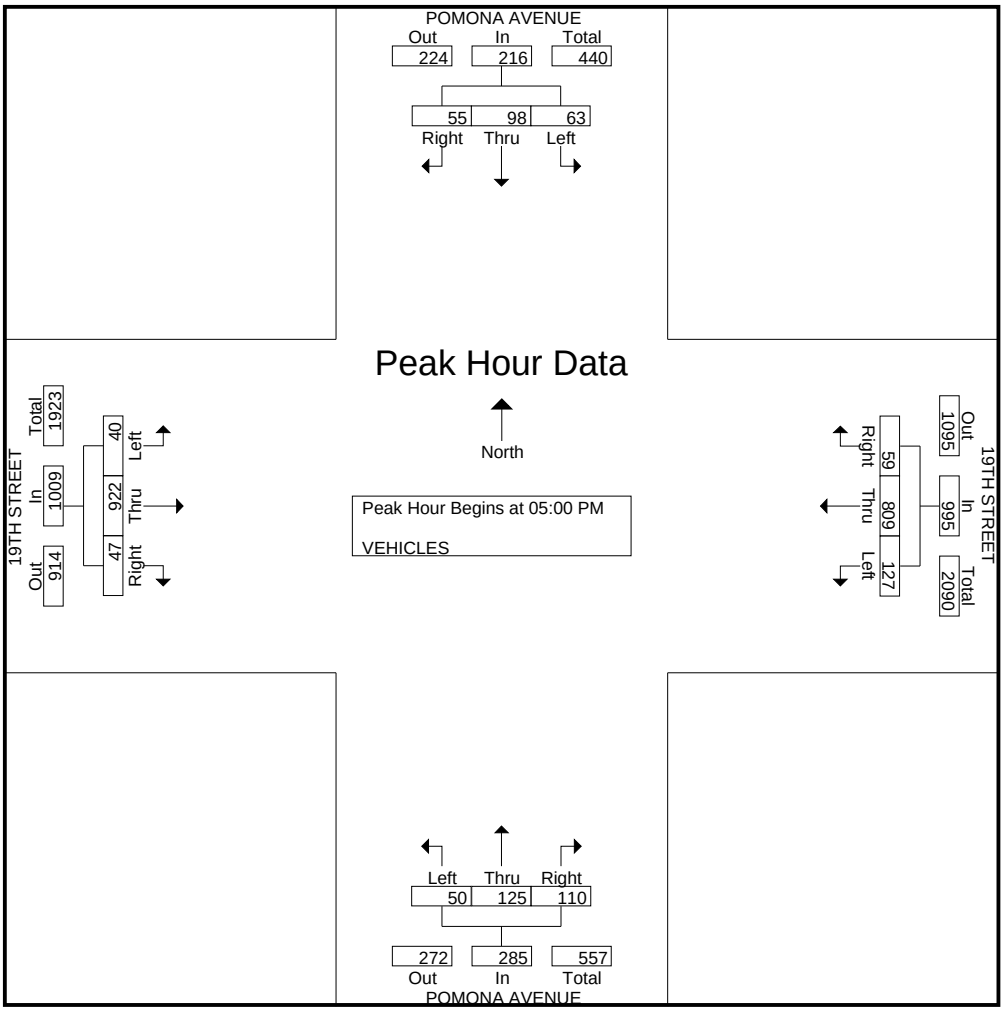

Transportation Studies, Inc.

2860 Walnut Avenue, Suite C
Tustin, CA. 92780

City: COSTA MESA
N-S Direction: ANAHEIM AVENUE
E-W Direction: 19TH STREET

File Name : H0905019
Site Code : 00005054
Start Date : 5/7/2009
Page No : 1

Groups Printed- Vehicles

	ANAHEIM AVENUE Southbound			19TH STREET Westbound			ANAHEIM AVENUE Northbound			19TH STREET Eastbound			
Start Time	Right	Thru	Left	Right	Thru	Left	Right	Thru	Left	Right	Thru	Left	Int. Total
Factor	1.0	1.0	1.0	1.0	1.0	1.0	1.0	1.0	1.0	1.0	1.0	1.0	
07:00 AM	4	8	2	3	111	10	13	5	2	4	167	3	332
07:15 AM	3	7	4	4	137	11	19	6	3	2	192	2	390
07:30 AM	4	6	7	3	152	10	20	7	4	3	210	4	430
07:45 AM	5	8	9	5	177	13	26	8	5	4	237	5	502
Total	16	29	22	15	577	44	78	26	14	13	806	14	1654
08:00 AM	6	11	10	7	191	21	27	9	8	3	248	6	547
08:15 AM	4	13	12	8	179	31	20	6	7	5	244	5	534
08:30 AM	6	9	9	9	167	24	21	5	6	5	237	6	504
08:45 AM	7	8	10	9	187	27	20	6	6	5	232	7	524
Total	23	41	41	33	724	103	88	26	27	18	961	24	2109
*** BREAK ***													
04:30 PM	6	9	16	21	247	18	28	11	10	14	198	7	585
04:45 PM	5	8	10	19	218	19	21	14	13	10	215	8	560
Total	11	17	26	40	465	37	49	25	23	24	413	15	1145
05:00 PM	6	9	18	27	227	21	23	15	14	11	249	9	629
05:15 PM	5	11	13	29	230	28	25	16	15	13	251	10	646
05:30 PM	6	10	17	27	244	30	21	15	16	12	268	11	677
05:45 PM	7	13	14	26	229	31	24	15	14	13	249	10	645
Total	24	43	62	109	930	110	93	61	59	49	1017	40	2597
06:00 PM	8	14	15	27	244	29	27	14	16	15	255	14	678
06:15 PM	7	15	16	23	221	21	29	13	14	12	237	11	619
Grand Total	89	159	182	247	3161	344	364	165	153	131	3689	118	8802
Apprch %	20.7	37	42.3	6.6	84.2	9.2	53.4	24.2	22.4	3.3	93.7	3	
Total %	1	1.8	2.1	2.8	35.9	3.9	4.1	1.9	1.7	1.5	41.9	1.3	

Transportation Studies, Inc.

2860 Walnut Avenue, Suite C
Tustin, CA. 92780

File Name : H0905019
Site Code : 00005054
Start Date : 5/7/2009
Page No : 2

	ANAHEIM AVENUE Southbound				19TH STREET Westbound				ANAHEIM AVENUE Northbound				19TH STREET Eastbound				
Start Time	Right	Thru	Left	App. Total	Right	Thru	Left	App. Total	Right	Thru	Left	App. Total	Right	Thru	Left	App. Total	Int. Total
Peak Hour Analysis From 07:00 AM to 08:45 AM - Peak 1 of 1																	
Peak Hour for Entire Intersection Begins at 08:00 AM																	
08:00 AM	6	11	10	27	7	**191**	21	219	**27**	**9**	**8**	**44**	3	**248**	6	**257**	**547**
08:15 AM	4	**13**	**12**	**29**	8	179	**31**	218	20	6	7	33	**5**	244	5	254	534
08:30 AM	6	9	9	24	**9**	167	24	200	21	5	6	32	5	237	6	248	504
08:45 AM	**7**	8	10	25	9	187	27	**223**	20	6	6	32	5	232	**7**	244	524
Total Volume	23	41	41	105	33	724	103	860	88	26	27	141	18	961	24	1003	2109
% App. Total	21.9	39	39		3.8	84.2	12		62.4	18.4	19.1		1.8	95.8	2.4		
PHF	.821	.788	.854	.905	.917	.948	.831	.964	.815	.722	.844	.801	.900	.969	.857	.976	.964

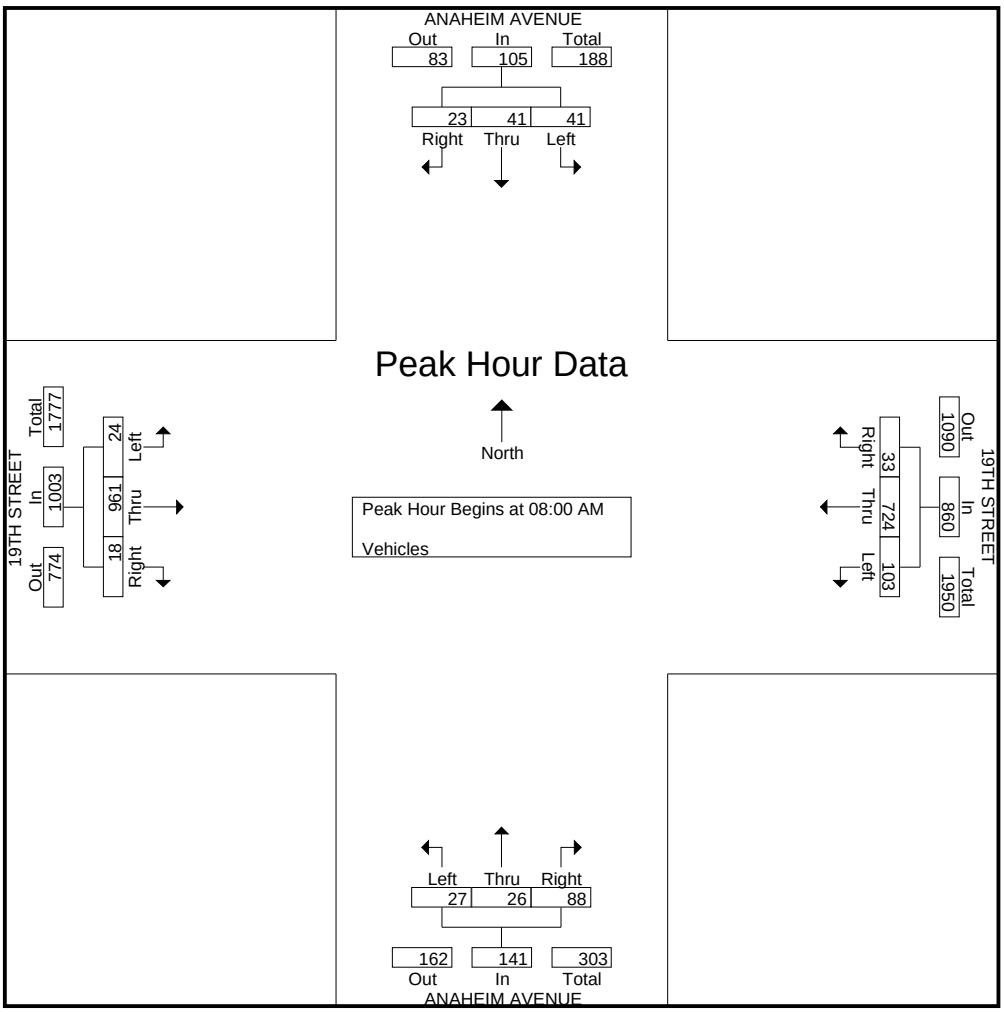

Transportation Studies, Inc.

2860 Walnut Avenue, Suite C
Tustin, CA. 92780

File Name : H0905019
Site Code : 00005054
Start Date : 5/7/2009
Page No : 3

	ANAHEIM AVENUE Southbound				19TH STREET Westbound				ANAHEIM AVENUE Northbound				19TH STREET Eastbound				
Start Time	Right	Thru	Left	App. Total	Right	Thru	Left	App. Total	Right	Thru	Left	App. Total	Right	Thru	Left	App. Total	Int. Total
Peak Hour Analysis From 04:30 PM to 06:15 PM - Peak 1 of 1																	
Peak Hour for Entire Intersection Begins at 05:15 PM																	
05:15 PM	5	11	13	29	**29**	230	28	287	25	**16**	15	56	13	251	10	274	646
05:30 PM	6	10	**17**	33	27	**244**	30	**301**	21	15	**16**	52	12	**268**	11	**291**	677
05:45 PM	7	13	14	34	26	229	**31**	286	24	15	14	53	13	249	10	272	645
06:00 PM	**8**	**14**	15	**37**	27	244	29	300	**27**	14	16	**57**	**15**	255	**14**	284	**678**
Total Volume	26	48	59	133	109	947	118	1174	97	60	61	218	53	1023	45	1121	2646
% App. Total	19.5	36.1	44.4		9.3	80.7	10.1		44.5	27.5	28		4.7	91.3	4		
PHF	.813	.857	.868	.899	.940	.970	.952	.975	.898	.938	.953	.956	.883	.954	.804	.963	.976

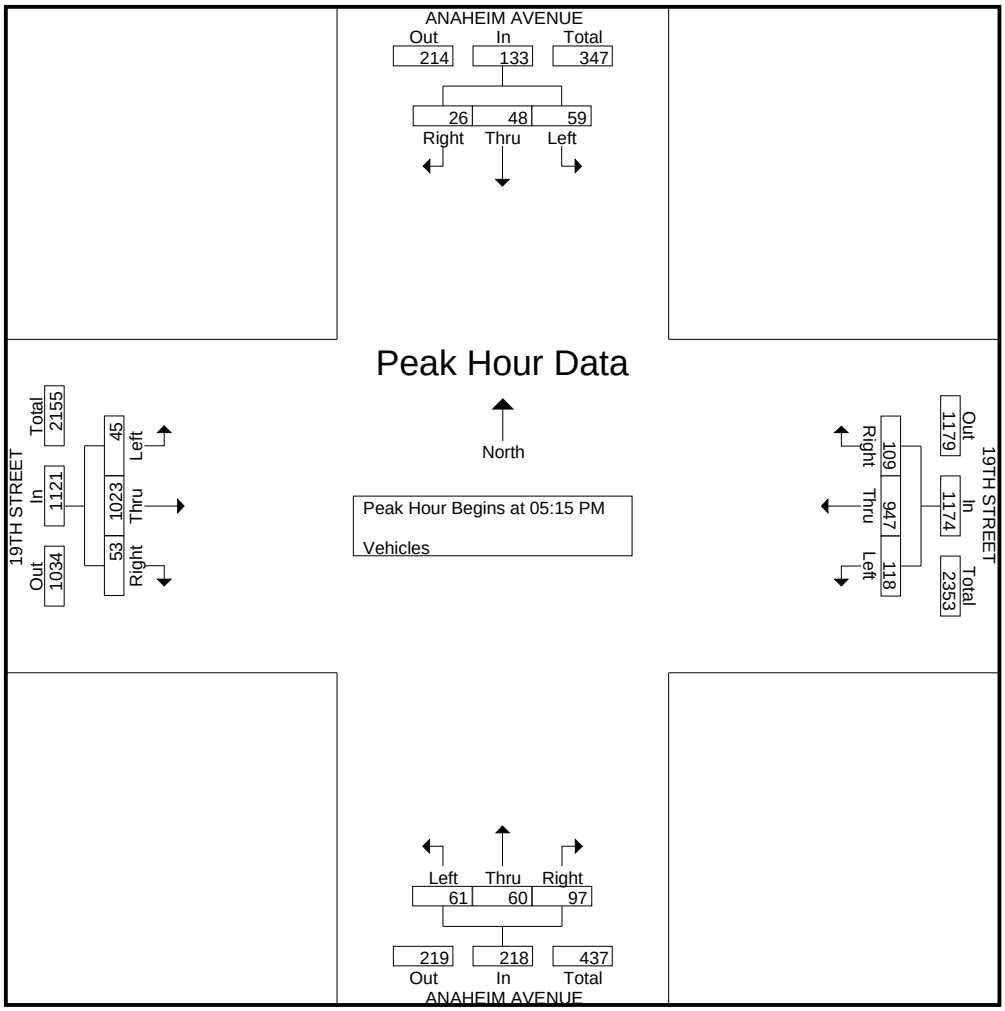

Transportation Studies, Inc.

2860 Walnut Avenue, Suite C
Tustin, CA. 92780

City: COSTA MESA
N-S Direction: PARK AVENUE
E-W Direction: 19TH STREET

File Name : H0905026
Site Code : 00002245
Start Date : 5/5/2009
Page No : 1

Groups Printed- Vehicles

	ALLEY Southbound			19TH STREET Westbound			PARK AVENUE Northbound			19TH STREET Eastbound			
Start Time	Right	Thru	Left	Right	Thru	Left	Right	Thru	Left	Right	Thru	Left	Int. Total
Factor	1.0	1.0	1.0	1.0	1.0	1.0	1.0	1.0	1.0	1.0	1.0	1.0	
07:00 AM	0	0	0	0	127	18	20	2	15	10	173	1	366
07:15 AM	0	0	0	0	135	14	20	0	11	10	209	0	399
07:30 AM	0	1	0	0	159	16	29	0	4	14	232	2	457
07:45 AM	0	0	0	0	212	27	23	0	16	19	257	0	554
Total	0	1	0	0	633	75	92	2	46	53	871	3	1776
08:00 AM	0	0	0	1	184	13	26	2	6	18	249	1	500
08:15 AM	0	0	0	1	219	25	33	0	8	4	263	2	555
08:30 AM	0	0	0	0	183	29	26	2	9	19	243	3	514
08:45 AM	1	0	0	1	189	29	19	3	4	23	246	5	520
Total	1	0	0	3	775	96	104	7	27	64	1001	11	2089
*** BREAK ***													
04:30 PM	0	0	0	3	231	47	38	2	21	13	271	4	630
04:45 PM	0	0	0	2	260	31	34	5	18	14	228	6	598
Total	0	0	0	5	491	78	72	7	39	27	499	10	1228
05:00 PM	1	0	1	2	242	46	46	2	26	18	271	8	663
05:15 PM	2	0	0	0	246	45	39	2	27	18	293	3	675
05:30 PM	1	0	0	3	265	46	32	4	26	15	257	4	653
05:45 PM	0	0	0	1	275	46	36	4	28	19	248	5	662
Total	4	0	1	6	1028	183	153	12	107	70	1069	20	2653
06:00 PM	1	0	0	2	238	56	48	2	32	17	258	3	657
06:15 PM	0	0	0	1	279	53	35	1	20	24	246	1	660
Grand Total	6	1	1	17	3444	541	504	31	271	255	3944	48	9063
Apprch %	75	12.5	12.5	0.4	86.1	13.5	62.5	3.8	33.6	6	92.9	1.1	
Total %	0.1	0	0	0.2	38	6	5.6	0.3	3	2.8	43.5	0.5	

Transportation Studies, Inc.

2860 Walnut Avenue, Suite C
Tustin, CA. 92780

File Name : H0905026
Site Code : 00002245
Start Date : 5/5/2009
Page No : 2

	ALLEY Southbound				19TH STREET Westbound				PARK AVENUE Northbound				19TH STREET Eastbound				
Start Time	Right	Thru	Left	App. Total	Right	Thru	Left	App. Total	Right	Thru	Left	App. Total	Right	Thru	Left	App. Total	Int. Total
Peak Hour Analysis From 07:00 AM to 08:45 AM - Peak 1 of 1																	
Peak Hour for Entire Intersection Begins at 07:45 AM																	
07:45 AM	0	0	0	0	0	212	27	239	23	0	**16**	39	**19**	257	0	**276**	554
08:00 AM	0	0	0	0	**1**	184	13	198	26	**2**	6	34	18	249	1	268	500
08:15 AM	0	0	0	0	1	**219**	25	**245**	**33**	0	8	**41**	4	**263**	2	269	**555**
08:30 AM	0	0	0	0	0	183	**29**	212	26	2	9	37	19	243	**3**	265	514
Total Volume	0	0	0	0	2	798	94	894	108	4	39	151	60	1012	6	1078	2123
% App. Total	0	0	0		0.2	89.3	10.5		71.5	2.6	25.8		5.6	93.9	0.6		
PHF	.000	.000	.000	.000	.500	.911	.810	.912	.818	.500	.609	.921	.789	.962	.500	.976	.956

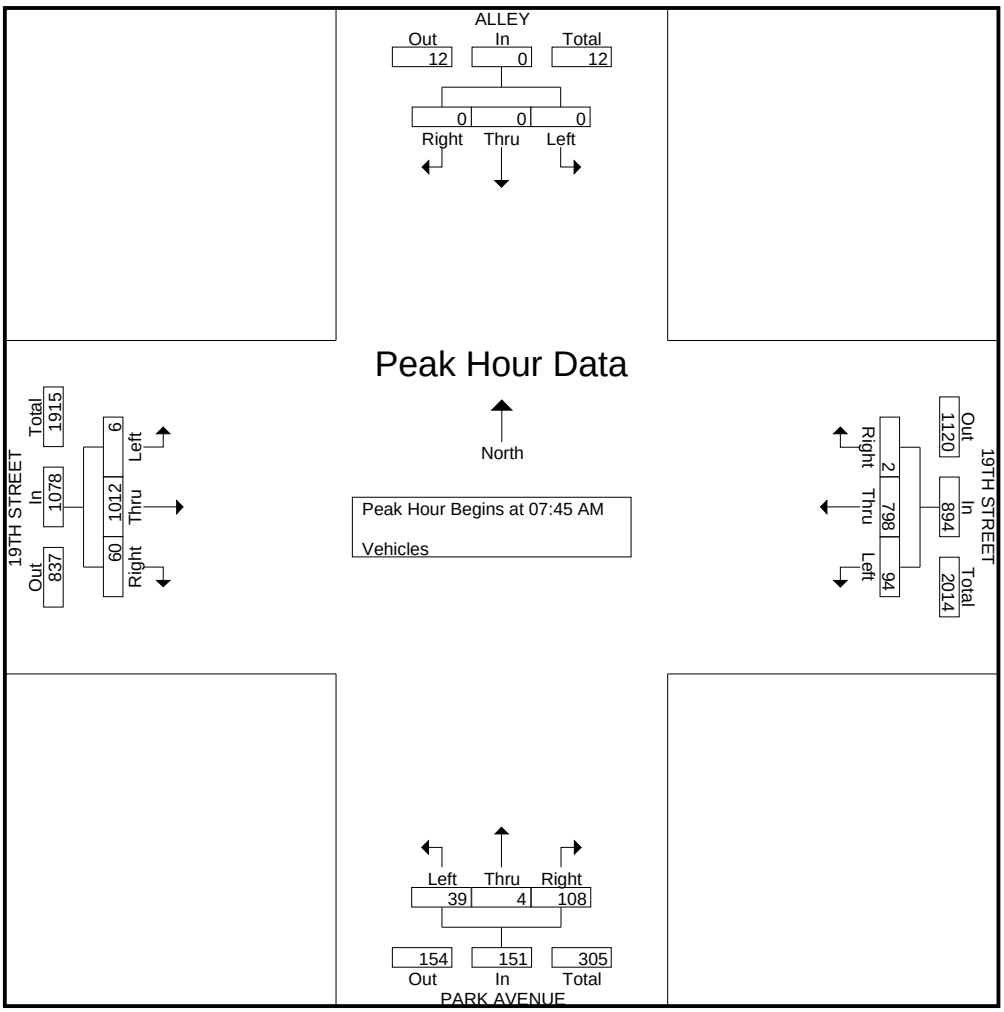

Transportation Studies, Inc.

2860 Walnut Avenue, Suite C
Tustin, CA. 92780

File Name : H0905026
Site Code : 00002245
Start Date : 5/5/2009
Page No : 3

	ALLEY Southbound				19TH STREET Westbound				PARK AVENUE Northbound				19TH STREET Eastbound				
Start Time	Right	Thru	Left	App. Total	Right	Thru	Left	App. Total	Right	Thru	Left	App. Total	Right	Thru	Left	App. Total	Int. Total
Peak Hour Analysis From 04:30 PM to 06:15 PM - Peak 1 of 1																	
Peak Hour for Entire Intersection Begins at 05:00 PM																	
05:00 PM	1	0	**1**	**2**	2	242	**46**	290	**46**	2	26	**74**	18	271	**8**	297	663
05:15 PM	**2**	0	0	2	0	246	45	291	39	2	27	68	18	**293**	3	**314**	**675**
05:30 PM	1	0	0	1	**3**	265	46	314	32	**4**	26	62	15	257	4	276	653
05:45 PM	0	0	0	0	1	**275**	46	**322**	36	4	**28**	68	**19**	248	5	272	662
Total Volume	4	0	1	5	6	1028	183	1217	153	12	107	272	70	1069	20	1159	2653
% App. Total	80	0	20		0.5	84.5	15		56.2	4.4	39.3		6	92.2	1.7		
PHF	.500	.000	.250	.625	.500	.935	.995	.945	.832	.750	.955	.919	.921	.912	.625	.923	.983

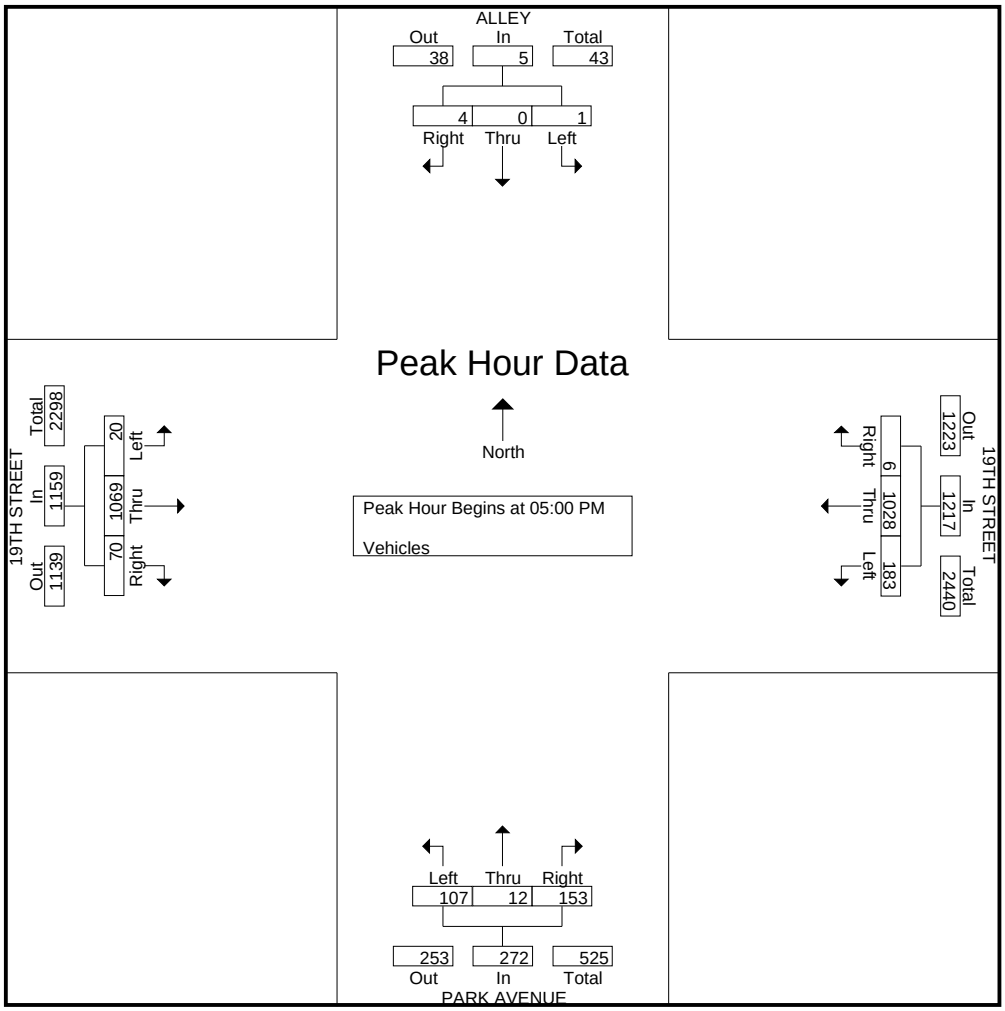

Transportation Studies, Inc.

2860 Walnut Avenue, Suite C
Tustin, CA. 92780

City: COSTA MESA
N-S Direction: HARBOR BOULEVARD
E-W Direction: 19TH STREET

File Name : H0905014
Site Code : 00005054
Start Date : 5/6/2009
Page No : 1

Groups Printed- Vehicles

	HARBOR BOULEVARD Southbound			19TH STREET Westbound			HARBOR BOULEVARD Northbound			19TH STREET Eastbound			
Start Time	Right	Thru	Left	Right	Thru	Left	Right	Thru	Left	Right	Thru	Left	Int. Total
Factor	1.0	1.0	1.0	1.0	1.0	1.0	1.0	1.0	1.0	1.0	1.0	1.0	
07:00 AM	49	79	18	13	91	9	0	27	2	1	164	38	491
07:15 AM	54	100	31	14	114	7	0	44	6	8	188	36	602
07:30 AM	73	128	31	16	126	5	2	40	5	5	264	41	736
07:45 AM	73	106	32	34	134	10	2	52	5	7	219	55	729
Total	249	413	112	77	465	31	4	163	18	21	835	170	2558
08:00 AM	70	111	36	38	151	8	4	65	3	9	239	51	785
08:15 AM	65	108	32	40	159	11	3	71	6	10	229	59	793
08:30 AM	63	104	38	43	166	9	4	78	4	9	242	54	814
08:45 AM	62	102	35	40	154	8	3	73	5	9	218	52	761
Total	260	425	141	161	630	36	14	287	18	37	928	216	3153
*** BREAK ***													
04:30 PM	83	146	40	47	168	42	4	101	15	11	155	130	942
04:45 PM	77	161	44	54	178	47	6	111	18	14	163	129	1002
Total	160	307	84	101	346	89	10	212	33	25	318	259	1944
05:00 PM	81	167	46	58	190	45	6	117	20	10	180	113	1033
05:15 PM	75	153	50	51	176	49	5	105	16	15	192	121	1008
05:30 PM	86	165	42	55	188	47	4	114	19	14	174	116	1024
05:45 PM	79	150	46	58	196	49	8	124	24	18	189	127	1068
Total	321	635	184	222	750	190	23	460	79	57	735	477	4133
06:00 PM	77	146	45	51	231	43	6	110	16	18	194	117	1054
06:15 PM	61	137	47	43	219	40	4	103	15	13	186	103	971
Grand Total	1128	2063	613	655	2641	429	61	1335	179	171	3196	1342	13813
Apprch %	29.7	54.2	16.1	17.6	70.9	11.5	3.9	84.8	11.4	3.6	67.9	28.5	
Total %	8.2	14.9	4.4	4.7	19.1	3.1	0.4	9.7	1.3	1.2	23.1	9.7	

Transportation Studies, Inc.

2860 Walnut Avenue, Suite C
Tustin, CA. 92780

File Name : H0905014
Site Code : 00005054
Start Date : 5/6/2009
Page No : 2

	HARBOR BOULEVARD Southbound				19TH STREET Westbound				HARBOR BOULEVARD Northbound				19TH STREET Eastbound				
Start Time	Right	Thru	Left	App. Total	Right	Thru	Left	App. Total	Right	Thru	Left	App. Total	Right	Thru	Left	App. Total	Int. Total
Peak Hour Analysis From 07:00 AM to 08:45 AM - Peak 1 of 1																	
Peak Hour for Entire Intersection Begins at 08:00 AM																	
08:00 AM	**70**	**111**	36	**217**	38	151	8	197	**4**	65	3	72	9	239	51	299	785
08:15 AM	65	108	32	205	40	159	**11**	210	3	71	**6**	80	**10**	229	**59**	298	793
08:30 AM	63	104	**38**	205	**43**	**166**	9	**218**	4	**78**	4	**86**	9	**242**	54	**305**	**814**
08:45 AM	62	102	35	199	40	154	8	202	3	73	5	81	9	218	52	279	761
Total Volume	260	425	141	826	161	630	36	827	14	287	18	319	37	928	216	1181	3153
% App. Total	31.5	51.5	17.1		19.5	76.2	4.4		4.4	90	5.6		3.1	78.6	18.3		
PHF	.929	.957	.928	.952	.936	.949	.818	.948	.875	.920	.750	.927	.925	.959	.915	.968	.968

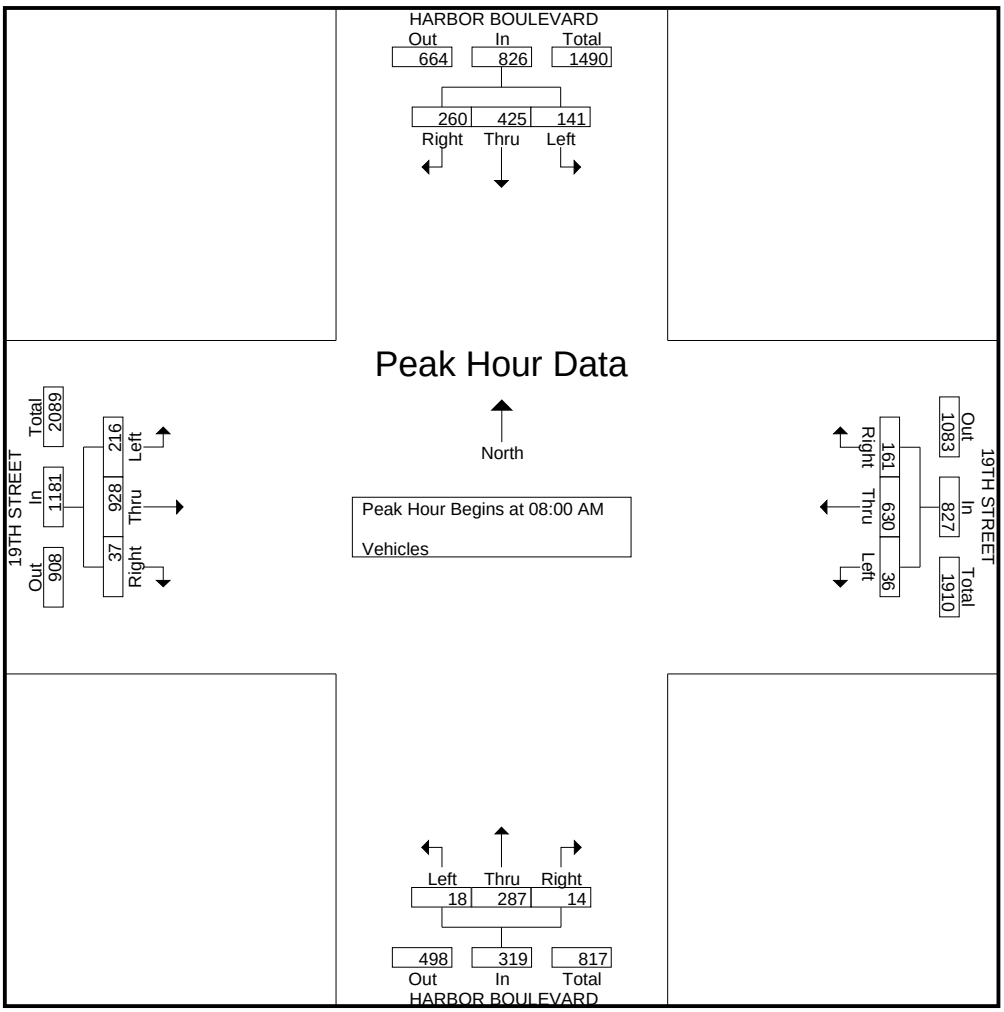

Transportation Studies, Inc.

2860 Walnut Avenue, Suite C
Tustin, CA. 92780

File Name : H0905014
Site Code : 00005054
Start Date : 5/6/2009
Page No : 3

	HARBOR BOULEVARD Southbound				19TH STREET Westbound				HARBOR BOULEVARD Northbound				19TH STREET Eastbound				
Start Time	Right	Thru	Left	App. Total	Right	Thru	Left	App. Total	Right	Thru	Left	App. Total	Right	Thru	Left	App. Total	Int. Total
Peak Hour Analysis From 04:30 PM to 06:15 PM - Peak 1 of 1																	
Peak Hour for Entire Intersection Begins at 05:15 PM																	
05:15 PM	75	153	**50**	278	51	176	**49**	276	5	105	16	126	15	192	121	328	1008
05:30 PM	**86**	**165**	42	**293**	55	188	47	290	4	114	19	137	14	174	116	304	1024
05:45 PM	79	150	46	275	**58**	196	49	303	**8**	**124**	**24**	**156**	**18**	189	**127**	**334**	**1068**
06:00 PM	77	146	45	268	51	**231**	43	**325**	6	110	16	132	18	**194**	117	329	1054
Total Volume	317	614	183	1114	215	791	188	1194	23	453	75	551	65	749	481	1295	4154
% App. Total	28.5	55.1	16.4		18	66.2	15.7		4.2	82.2	13.6		5	57.8	37.1		
PHF	.922	.930	.915	.951	.927	.856	.959	.918	.719	.913	.781	.883	.903	.965	.947	.969	.972

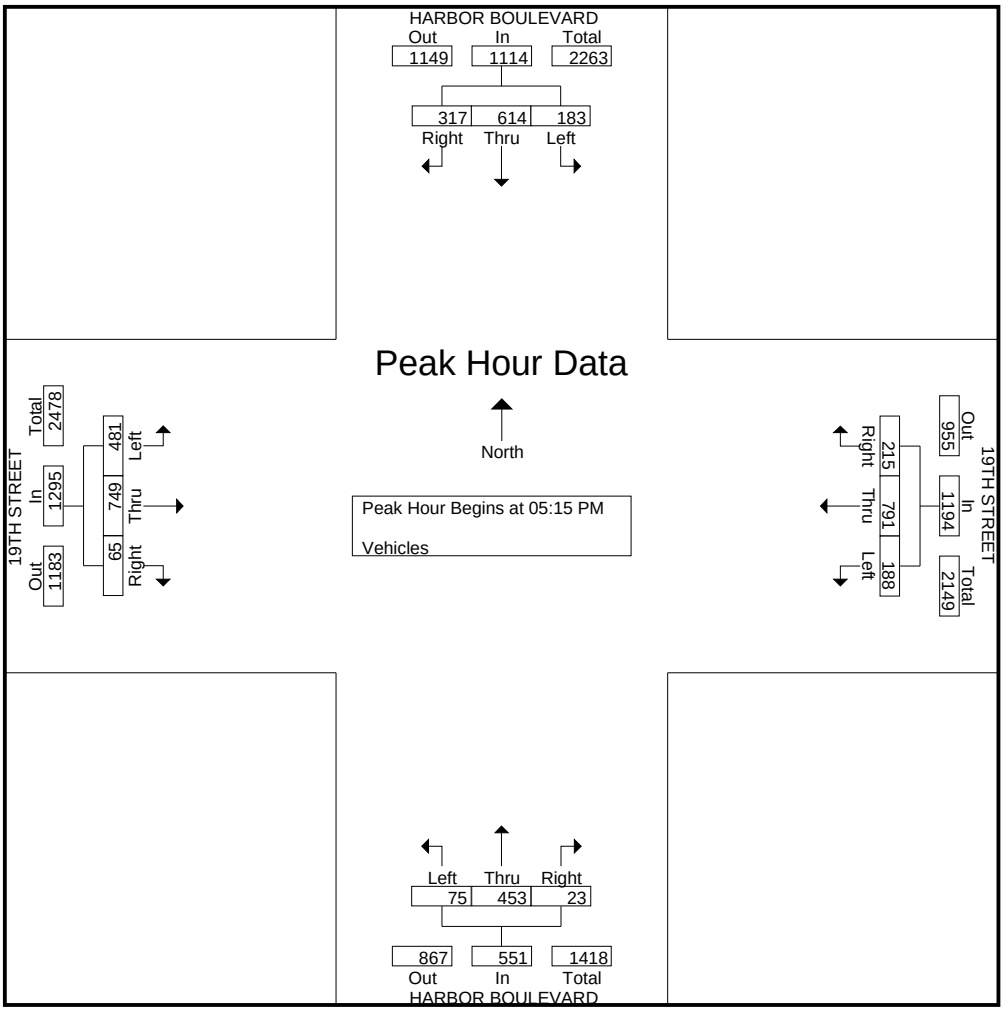

WILTEC

LOCATION: 19th

Phone: (626) 564-1944 Fax: (626) 564-1944 E-mail: info@wiltecusa.com

INTERSECTION TURNING MOVEMENT COUNT SUMMARY

CLIENT: CITY OF COSTA MESA
PROJECT: 2007 TRAFFIC COUNTS
DATE: THURSDAY MAY 3, 2007
PERIODS: 7:00 AM TO 9:00 AM AND 4:00 PM TO 6:00 PM
INTERSECTION: N/S NEWPORT BOULEVARD
E/W 19TH STREET
CITY: COSTA MESA

15 MIN COUNTS — 7:00 AM TO 9:00 AM

PERIOD	1 SBRT	2 SBTH	3 SBLT	4 WBRT	5 WBTH	6 WBLT	7 NBRT	8 NBTH	9 NBLT	10 EBRT	11 EBTH	12 EBLT	TOTAL
700-715	102	531	36	42	23	1	2	667	3	6	27	207	1647
715-730	110	644	45	54	27	2	1	640	3	4	38	250	1818
730-745	123	545	43	56	34	7	4	642	5	3	57	205	1724
745-800	102	582	39	62	42	7	2	675	11	4	47	222	1795
800-815	141	621	50	60	56	5	2	699	11	3	37	192	1877
815-830	105	610	32	39	40	2	1	630	5	1	38	181	1684
830-845	127	543	33	60	33	9	1	589	8	3	35	210	1651
845-900	176	689	55	53	68	6	2	658	10	5	38	205	1965

HOUR TOTALS

TIME	1 SBRT	2 SBTH	3 SBLT	4 WBRT	5 WBTH	6 WBLT	7 NBRT	8 NBTH	9 NBLT	10 EBRT	11 EBTH	12 EBLT	TOTAL
700-800	437	2302	163	214	126	17	9	2624	22	17	169	884	6984
715-815	476	2392	177	232	159	21	9	2656	30	14	179	869	7214
730-830	471	2358	164	217	172	21	9	2646	32	11	179	800	7080
745-845	475	2356	154	221	171	23	6	2593	35	11	157	805	7007
800-900	549	2463	170	212	197	22	6	2576	34	12	148	788	7177

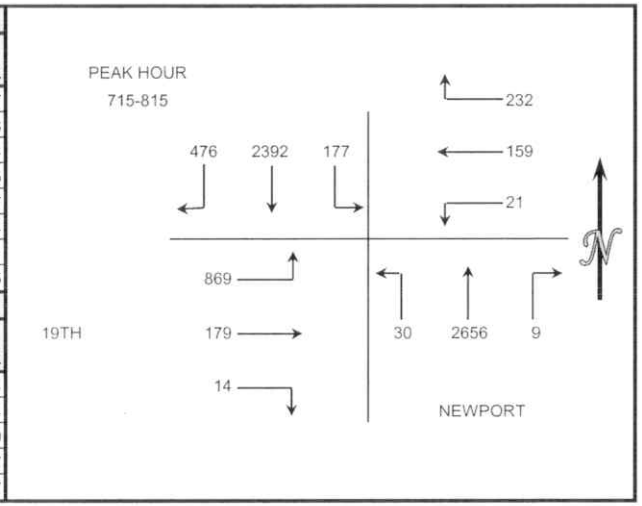

15 MIN COUNTS — 4:00 PM TO 6:00 PM

PERIOD	1 SBRT	2 SBTH	3 SBLT	4 WBRT	5 WBTH	6 WBLT	7 NBRT	8 NBTH	9 NBLT	10 EBRT	11 EBTH	12 EBLT	TOTAL
400-415	185	721	48	47	101	11	7	746	12	6	46		
415-430	171	700	35	43	97	10	12	620	14	8	50		
430-445	181	764	55	37	92	9	4	610	15	8	38		
445-500	156	771	49	30	59	9	11	694	21	10	42		
500-515	197	750	50	39	72	17	12	627	12	6	47		
515-530	208	768	44	43	92	18	10	666	16	8	41		
530-545	164	711	44	23	66	13	3	595	14	5	36		
545-600	191	694	44	28	86	9	7	575	12	13	32		

HOUR TOTALS

TIME	1 SBRT	2 SBTH	3 SBLT	4 WBRT	5 WBTH	6 WBLT	7 NBRT	8 NBTH	9 NBLT	10 EBRT	11 EBTH	12 EBLT	TOTAL
400-500	693	2956	187	157	349	39	34	2670	62	32	176		
415-515	705	2985	189	149	320	45	39	2551	62	32	177		
430-530	742	3053	198	149	315	53	37	2597	64	32	168	717	8125
445-545	725	3000	187	135	289	57	36	2582	63	29	166		
500-600	760	2923	182	133	316	57	32	2463	54	32	156		

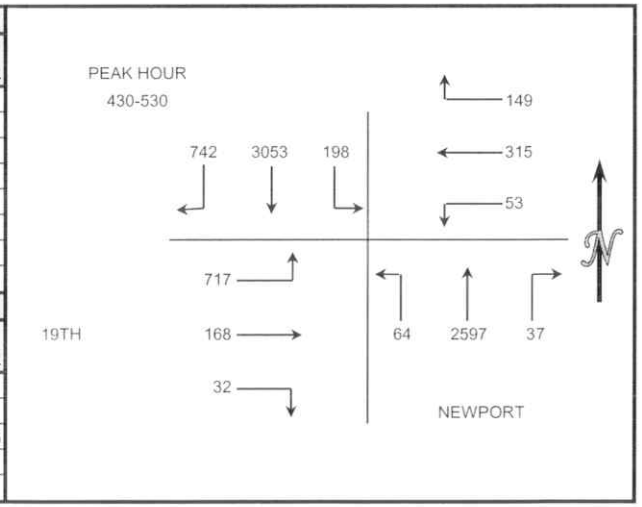

WILTEC

Phone: (626) 564-1944 Fax: (626) 564-1944 E-mail: info@wiltecusa.com

LOCATION: Broadway

INTERSECTION TURNING MOVEMENT COUNT SUMMARY

CLIENT: CITY OF COSTA MESA
PROJECT: 2007 TRAFFIC COUNTS
DATE: THURSDAY MAY 3, 2007
PERIODS: 7:00 AM TO 9:00 AM AND 4:00 PM TO 6:00 PM
INTERSECTION: N/S NEWPORT BOULEVARD
E/W BROADWAY
CITY: COSTA MESA

15 MIN COUNTS — 7:00 AM TO 9:00 AM

PERIOD	1 SBRT	2 SBTH	3 SBLT	4 WBRT	5 WBTH	6 WBLT	7 NBRT	8 NBTH	9 NBLT	10 EBRT	11 EBTH	12 EBLT	TOTAL
700-715	2	647	7	30	3	12	4	625	1	0	0	2	1333
715-730	3	599	14	21	2	5	1	595	0	0	3	5	1248
730-745	3	564	26	19	2	8	2	613	2	0	3	2	1244
745-800	0	535	8	19	2	5	0	712	0	1	0	1	1283
800-815	4	607	15	32	6	15	3	655	0	2	5	2	1346
815-830	0	643	10	30	2	9	3	645	2	0	1	1	1346
830-845	1	476	15	21	0	15	0	625	0	0	2	0	1155
845-900	1	452	15	10	0	6	1	537	11	0	4	0	1037
HOUR TOTALS													
TIME	1 SBRT	2 SBTH	3 SBLT	4 WBRT	5 WBTH	6 WBLT	7 NBRT	8 NBTH	9 NBLT	10 EBRT	11 EBTH	12 EBLT	TOTAL
700-800	8	2345	55	89	9	30	7	2545	3	1	6	10	5108
715-815	10	2305	63	91	12	33	6	2575	2	3	11	10	5121
730-830	7	2349	59	100	12	37	8	2625	4	3	9	6	5219
745-845	5	2261	48	102	10	44	6	2637	2	3	8	4	5130
800-900	6	2178	55	93	8	45	7	2462	13	2	12	3	4884

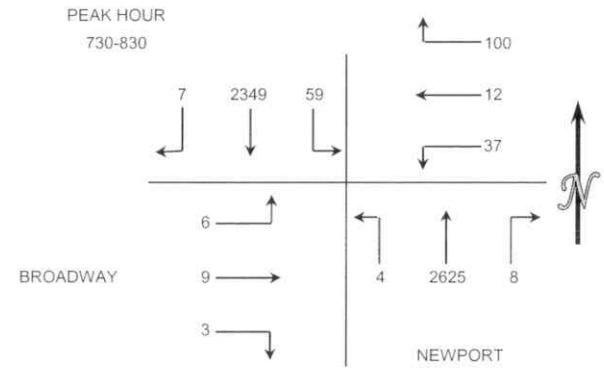

15 MIN COUNTS — 4:00 PM TO 6:00 PM

PERIOD	1 SBRT	2 SBTH	3 SBLT	4 WBRT	5 WBTH	6 WBLT	7 NBRT	8 NBTH	9 NBLT	10 EBRT	11 EBTH	12 EBLT	TOTAL
400-415	11	740	23	75	7	24	8	525	2	4	6	3	1428
415-430	7	655	18	2	3	6	18	653	14	1	3	6	1386
430-445	14	666	30	47	4	12	21	669	4	4	1	2	1474
445-500	6	731	33	12	6	10	13	673	0	6	8	7	1505
500-515	21	773	25	26	1	7	2	593	0	3	3	0	1454
515-530	20	831	51	8	4	3	18	557	3	1	11	9	1516
530-545	18	746	42	15	10	10	10	585	0	5	7	2	1450
545-600	13	697	24	15	15	20	3	555	2	5	7	6	1362
HOUR TOTALS													
TIME	1 SBRT	2 SBTH	3 SBLT	4 WBRT	5 WBTH	6 WBLT	7 NBRT	8 NBTH	9 NBLT	10 EBRT	11 EBTH	12 EBLT	TOTAL
400-500	38	2792	104	136	20	52	60	2520	20	15	18	18	5793
415-515	48	2825	106	87	14	35	54	2588	18	14	15	15	5819
430-530	61	3001	139	93	15	32	54	2492	7	14	23	18	5949
445-545	65	3081	151	61	21	30	43	2408	3	15	29	18	5925
500-600	72	3047	142	64	30	40	33	2290	5	14	28	17	5782

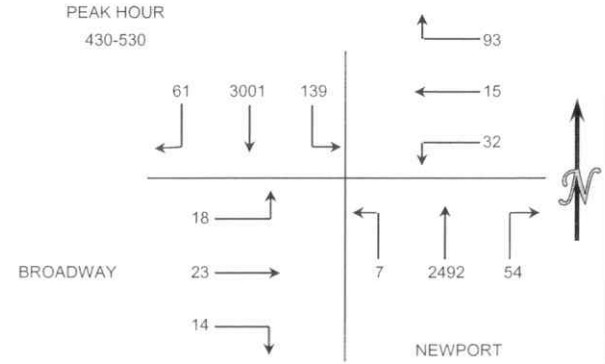

WILTEC

Phone: (626) 564-1944 Fax: (626) 564-1944 E-mail: info@wiltecusa.com

LOCATION: Harbor

INTERSECTION TURNING MOVEMENT COUNT SUMMARY

CLIENT: CITY OF COSTA MESA
PROJECT: 2007 TRAFFIC COUNTS
DATE: THURSDAY MAY 3, 2007
PERIODS: 7:00 AM TO 9:00 AM AND 4:00 PM TO 6:00 PM
INTERSECTION: N/S NEWPORT BOULEVARD
E/W HARBOR BOULEVARD
CITY: COSTA MESA

15 MIN COUNTS — 7:00 AM TO 9:00 AM

PERIOD	1 SBRT	2 SBTH	3 SBLT	4 WBRT	5 WBTH	6 WBLT	7 NBRT	8 NBTH	9 NBLT	10 EBRT	11 EBTH	12 EBLT	TOTAL
700-715	14	384	0	0	0	0	0	601	62	106	0	18	1185
715-730	5	442	0	0	0	0	0	651	34	90	0	1	1223
730-745	7	464	0	0	0	0	0	655	47	125	0	3	1301
745-800	12	541	0	0	0	0	0	732	95	141	0	3	1524
800-815	3	604	0	0	0	0	0	678	74	99	0	5	1463
815-830	10	697	0	0	0	0	0	643	59	111	0	11	1531
830-845	23	667	0	0	0	0	0	548	83	125	0	6	1452
845-900	17	626	0	0	0	0	0	481	87	123	0	4	1338

HOUR TOTALS

TIME	1 SBRT	2 SBTH	3 SBLT	4 WBRT	5 WBTH	6 WBLT	7 NBRT	8 NBTH	9 NBLT	10 EBRT	11 EBTH	12 EBLT	TOTAL
700-800	38	1831	0	0	0	0	0	2639	238	462	0	25	5233
715-815	27	2051	0	0	0	0	0	2716	250	455	0	12	5511
730-830	32	2306	0	0	0	0	0	2708	275	476	0	22	5819
745-845	48	2509	0	0	0	0	0	2601	311	476	0	25	5970
800-900	53	2594	0	0	0	0	0	2350	303	458	0	26	5784

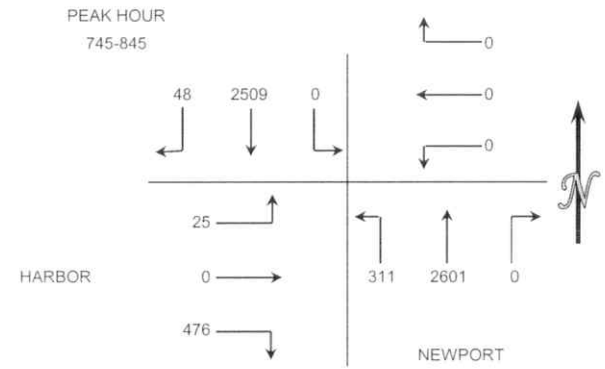

15 MIN COUNTS — 4:00 PM TO 6:00 PM

PERIOD	1 SBRT	2 SBTH	3 SBLT	4 WBRT	5 WBTH	6 WBLT	7 NBRT	8 NBTH	9 NBLT	10 EBRT	11 EBTH	12 EBLT	TOTAL
400-415	18	720	0	0	0	0	0	648	124	138	0	18	1666
415-430	28	668	0	0	0	0	0	595	148	118	0	22	1579
430-445	14	744	0	0	0	0	0	675	182	132	0	23	1770
445-500	9	756	0	0	0	0	0	609	172	134	0	29	1709
500-515	11	788	0	0	0	0	0	541	160	117	0	40	1657
515-530	15	810	0	0	0	0	0	606	198	143	0	29	1801
530-545	13	776	0	0	0	0	0	539	158	104	0	21	1611
545-600	25	743	0	0	0	0	0	548	129	140	0	28	1613

HOUR TOTALS

TIME	1 SBRT	2 SBTH	3 SBLT	4 WBRT	5 WBTH	6 WBLT	7 NBRT	8 NBTH	9 NBLT	10 EBRT	11 EBTH	12 EBLT	TOTAL
400-500	69	2888	0	0	0	0	0	2527	626	522	0	92	6724
415-515	62	2956	0	0	0	0	0	2420	662	501	0	114	6715
430-530	49	3098	0	0	0	0	0	2431	712	526	0	121	6937
445-545	48	3130	0	0	0	0	0	2295	688	498	0	119	6778
500-600	64	3117	0	0	0	0	0	2234	645	504	0	118	6682

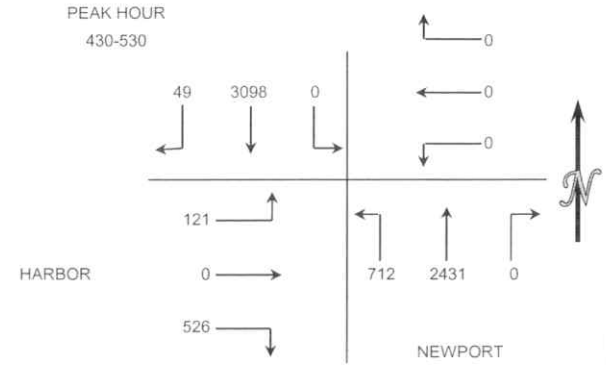

WILTEC

Phone: (626) 564-1944 Fax: (626) 564-1944 E-mail: info@wiltecusa.com

LOCATION: 18th

INTERSECTION TURNING MOVEMENT COUNT SUMMARY

CLIENT: CITY OF COSTA MESA
PROJECT: 2007 TRAFFIC COUNTS
DATE: THURSDAY MAY 3, 2007
PERIODS: 7:00 AM TO 9:00 AM AND 4:00 PM TO 6:00 PM
INTERSECTION: N/S NEWPORT BOULEVARD
E/W 18TH / ROCHESTER
CITY: COSTA MESA

15 MIN COUNTS — 7:00 AM TO 9:00 AM

PERIOD	1 SBRT	2 SBTH	3 SBLT	4 WBRT	5 WBTH	6 WBLT	7 NBRT	8 NBTH	9 NBLT	10 EBRT	11 EBTH	12 EBLT	TOTAL
700-715	34	540	5	6	7	0	0	561	13	6	7	52	1231
715-730	27	564	17	6	12	1	0	697	10	3	24	47	1408
730-745	33	628	14	12	14	3	2	738	12	12	26	81	1575
745-800	41	695	17	18	20	1	0	645	10	3	22	56	1528
800-815	56	626	26	3	10	1	0	713	18	11	21	55	1540
815-830	19	657	11	10	11	1	0	645	8	5	22	31	1420
830-845	31	709	29	3	24	5	3	749	15	5	13	46	1632
845-900	56	697	17	13	22	0	4	689	22	4	23	43	1590

HOUR TOTALS

TIME	1 SBRT	2 SBTH	3 SBLT	4 WBRT	5 WBTH	6 WBLT	7 NBRT	8 NBTH	9 NBLT	10 EBRT	11 EBTH	12 EBLT	TOTAL
700-800	135	2427	53	42	53	5	2	2641	45	24	79	236	5742
715-815	157	2513	74	39	56	6	2	2793	50	29	93	239	6051
730-830	149	2606	68	43	55	6	2	2741	48	31	91	223	6063
745-845	147	2687	83	34	65	8	3	2752	51	24	78	188	6120
800-900	162	2689	83	29	67	7	7	2796	63	25	79	175	6182

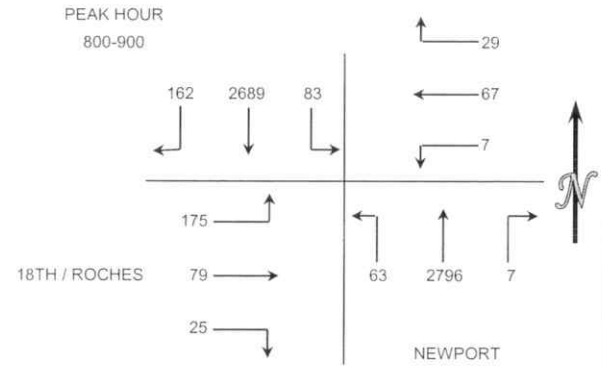

15 MIN COUNTS — 4:00 PM TO 6:00 PM

PERIOD	1 SBRT	2 SBTH	3 SBLT	4 WBRT	5 WBTH	6 WBLT	7 NBRT	8 NBTH	9 NBLT	10 EBRT	11 EBTH	12 EBLT	TOTAL
400-415	37	712	14	5	20	1	2	701	20	15	23	82	1632
415-430	29	702	48	4	11	6	3	680	13	9	14	59	1578
430-445	36	755	48	6	32	5	1	728	27	11	18	75	1742
445-500	64	823	35	10	35	5	3	695	29	8	27	68	1802
500-515	32	840	41	7	27	6	2	636	20	9	21	66	1707
515-530	22	905	26	2	23	3	2	669	35	16	12	60	1775
530-545	23	878	21	3	37	4	8	670	25	14	14	52	1749
545-600	18	789	34	6	16	3	2	629	29	12	15	62	1615

HOUR TOTALS

TIME	1 SBRT	2 SBTH	3 SBLT	4 WBRT	5 WBTH	6 WBLT	7 NBRT	8 NBTH	9 NBLT	10 EBRT	11 EBTH	12 EBLT	TOTAL
400-500	166	2992	145	25	98	17	9	2804	89	43	82	284	6754
415-515	161	3120	172	27	105	22	9	2739	89	37	80	268	6829
430-530	154	3323	150	25	117	19	8	2728	111	44	78	269	7026
445-545	141	3446	123	22	122	18	15	2670	109	47	74	246	7033
500-600	95	3412	122	18	103	16	14	2604	109	51	62	240	6846

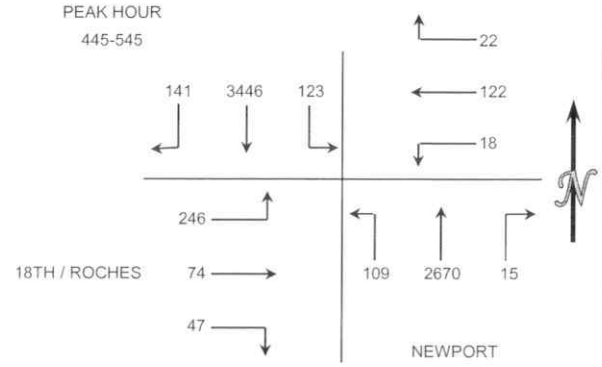

Transportation Studies, Inc.

2860 Walnut Avenue, Suite C
Tustin, CA. 92780

City: COSTA MESA
N-S Direction: PLACENTIA AVENUE
E-W Direction: 18TH STREET

File Name : H0905028
Site Code : 00000246
Start Date : 5/5/2009
Page No : 1

Groups Printed- Vehicles

	PLACENTIA AVENUE Southbound			18TH STREET Westbound			PLACENTIA AVENUE Northbound			18TH STREET Eastbound			
Start Time	Right	Thru	Left	Right	Thru	Left	Right	Thru	Left	Right	Thru	Left	Int. Total
Factor	1.0	1.0	1.0	1.0	1.0	1.0	1.0	1.0	1.0	1.0	1.0	1.0	
07:00 AM	13	141	5	6	14	8	6	72	2	5	14	5	291
07:15 AM	12	147	2	8	21	13	5	93	4	4	22	7	338
07:30 AM	29	162	11	4	37	9	8	95	4	5	34	7	405
07:45 AM	35	219	10	11	65	13	11	154	7	7	33	8	573
Total	89	669	28	29	137	43	30	414	17	21	103	27	1607
08:00 AM	28	186	8	14	36	14	3	140	7	5	40	14	495
08:15 AM	28	137	13	5	31	5	7	92	5	8	29	13	373
08:30 AM	15	183	7	15	41	9	2	102	6	7	18	11	416
08:45 AM	18	166	12	9	27	8	7	107	2	8	18	6	388
Total	89	672	40	43	135	36	19	441	20	28	105	44	1672
*** BREAK ***													
04:30 PM	11	131	7	23	28	2	17	229	2	9	57	16	532
04:45 PM	14	144	12	22	19	2	8	193	4	5	35	13	471
Total	25	275	19	45	47	4	25	422	6	14	92	29	1003
05:00 PM	11	123	10	13	25	6	21	249	3	8	50	19	538
05:15 PM	11	125	16	22	15	6	12	218	5	5	27	12	474
05:30 PM	13	105	16	9	14	4	14	171	2	0	48	20	416
05:45 PM	11	117	10	18	18	6	5	150	6	9	24	7	381
Total	46	470	52	62	72	22	52	788	16	22	149	58	1809
06:00 PM	11	109	8	14	13	3	12	175	3	4	35	12	399
06:15 PM	6	121	9	20	12	6	14	150	1	3	22	11	375
Grand Total	266	2316	156	213	416	114	152	2390	63	92	506	181	6865
Apprch %	9.7	84.6	5.7	28.7	56	15.3	5.8	91.7	2.4	11.8	65	23.2	
Total %	3.9	33.7	2.3	3.1	6.1	1.7	2.2	34.8	0.9	1.3	7.4	2.6	

Transportation Studies, Inc.

2860 Walnut Avenue, Suite C
Tustin, CA. 92780

File Name : H0905028
Site Code : 00000246
Start Date : 5/5/2009
Page No : 2

	PLACENTIA AVENUE Southbound				18TH STREET Westbound				PLACENTIA AVENUE Northbound				18TH STREET Eastbound				
Start Time	Right	Thru	Left	App. Total	Right	Thru	Left	App. Total	Right	Thru	Left	App. Total	Right	Thru	Left	App. Total	Int. Total
Peak Hour Analysis From 07:00 AM to 08:45 AM - Peak 1 of 1																	
Peak Hour for Entire Intersection Begins at 07:45 AM																	
07:45 AM	**35**	**219**	10	**264**	11	**65**	13	**89**	**11**	**154**	**7**	**172**	7	33	8	48	**573**
08:00 AM	28	186	8	222	14	36	**14**	64	3	140	7	150	5	**40**	**14**	**59**	495
08:15 AM	28	137	**13**	178	5	31	5	41	7	92	5	104	**8**	29	13	50	373
08:30 AM	15	183	7	205	**15**	41	9	65	2	102	6	110	7	18	11	36	416
Total Volume	106	725	38	869	45	173	41	259	23	488	25	536	27	120	46	193	1857
% App. Total	12.2	83.4	4.4		17.4	66.8	15.8		4.3	91	4.7		14	62.2	23.8		
PHF	.757	.828	.731	.823	.750	.665	.732	.728	.523	.792	.893	.779	.844	.750	.821	.818	.810

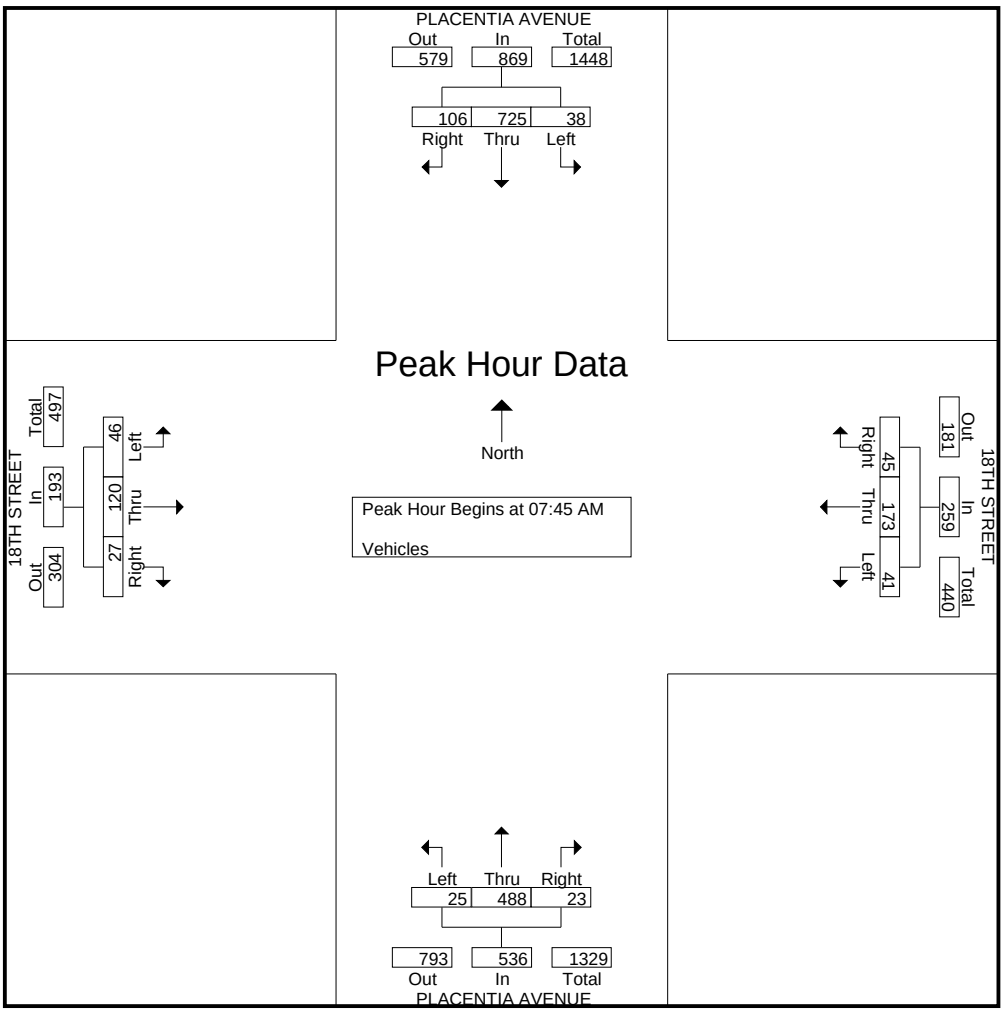

Transportation Studies, Inc.

2860 Walnut Avenue, Suite C
Tustin, CA. 92780

File Name : H0905028
Site Code : 00000246
Start Date : 5/5/2009
Page No : 3

	PLACENTIA AVENUE Southbound				18TH STREET Westbound				PLACENTIA AVENUE Northbound				18TH STREET Eastbound				
Start Time	Right	Thru	Left	App. Total	Right	Thru	Left	App. Total	Right	Thru	Left	App. Total	Right	Thru	Left	App. Total	Int. Total
Peak Hour Analysis From 04:30 PM to 06:15 PM - Peak 1 of 1																	
Peak Hour for Entire Intersection Begins at 04:30 PM																	
04:30 PM	11	131	7	149	**23**	**28**	2	**53**	17	229	2	248	**9**	**57**	16	**82**	532
04:45 PM	**14**	**144**	12	**170**	22	19	2	43	8	193	4	205	5	35	13	53	471
05:00 PM	11	123	10	144	13	25	**6**	44	**21**	**249**	3	**273**	8	50	**19**	77	**538**
05:15 PM	11	125	**16**	152	22	15	6	43	12	218	**5**	235	5	27	12	44	474
Total Volume	47	523	45	615	80	87	16	183	58	889	14	961	27	169	60	256	2015
% App. Total	7.6	85	7.3		43.7	47.5	8.7		6	92.5	1.5		10.5	66	23.4		
PHF	.839	.908	.703	.904	.870	.777	.667	.863	.690	.893	.700	.880	.750	.741	.789	.780	.936

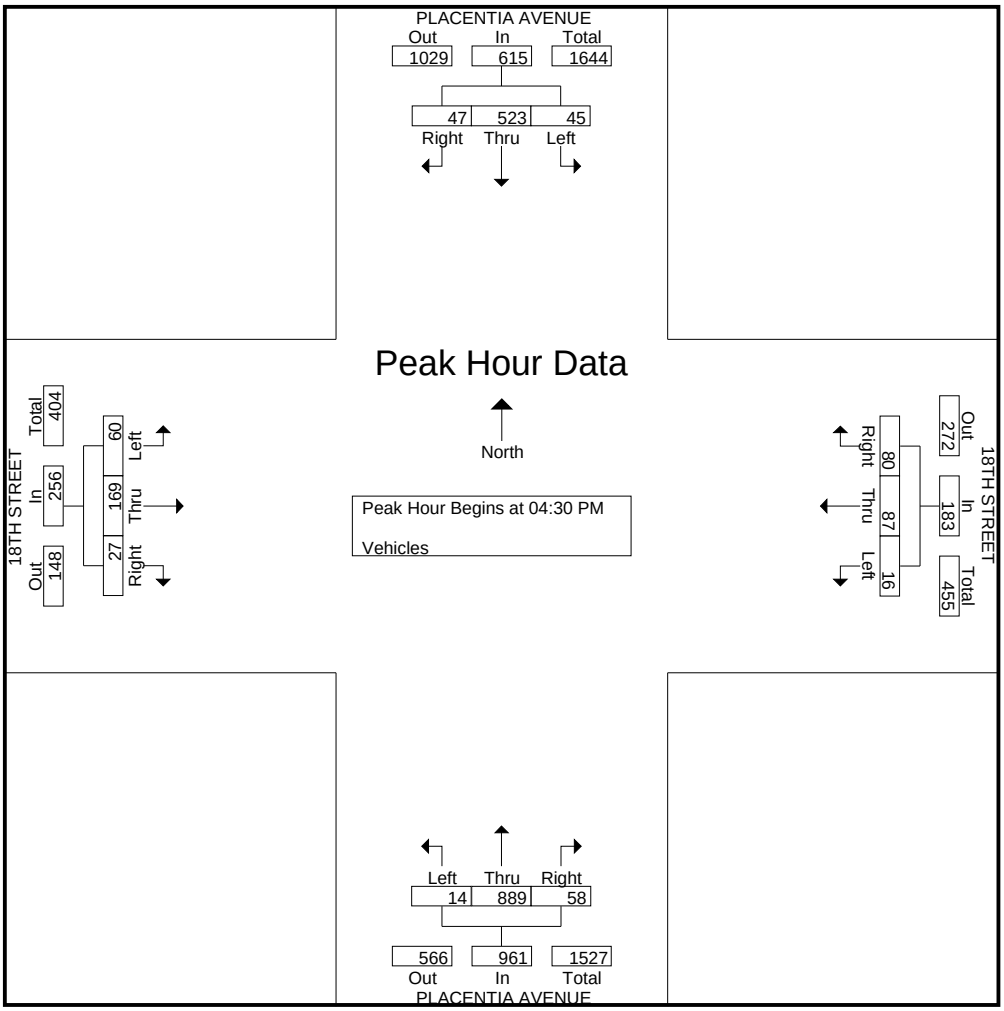

Transportation Studies, Inc.

2860 Walnut Avenue, Suite C
Tustin, CA. 92780

City: COSTA MESA
N-S Direction: WHITTIER AVENUE
E-W Direction: 17TH STREET

File Name : H0905008
Site Code : 00000000
Start Date : 4/29/2009
Page No : 1

Groups Printed- VEHICLES

	WHITTIER AVENUE Southbound			17TH STREET Westbound			WHITTIER AVENUE Northbound			17TH STREET Eastbound			
Start Time	Right	Thru	Left	Right	Thru	Left	Right	Thru	Left	Right	Thru	Left	Int. Total
Factor	1.0	1.0	1.0	1.0	1.0	1.0	1.0	1.0	1.0	1.0	1.0	1.0	
07:00 AM	6	0	10	14	7	1	4	3	0	0	3	1	49
07:15 AM	4	5	9	10	0	0	0	3	0	1	1	6	39
07:30 AM	8	5	11	9	0	1	1	13	0	4	1	6	59
07:45 AM	20	8	0	1	0	0	0	11	0	0	0	25	65
Total	38	18	30	34	7	2	5	30	0	5	5	38	212
08:00 AM	21	5	4	4	0	0	1	8	0	0	0	19	62
08:15 AM	9	5	0	3	0	0	0	7	0	0	0	6	30
08:30 AM	12	2	11	7	5	1	0	7	0	1	2	8	56
08:45 AM	2	1	21	22	4	3	1	0	0	0	2	1	57
Total	44	13	36	36	9	4	2	22	0	1	4	34	205
*** BREAK ***													
04:30 PM	0	1	14	16	2	5	1	2	0	0	6	0	47
04:45 PM	1	2	15	23	3	2	2	1	0	0	3	1	53
Total	1	3	29	39	5	7	3	3	0	0	9	1	100
05:00 PM	1	2	16	22	1	2	2	4	0	0	3	0	53
05:15 PM	1	4	17	22	3	5	3	4	0	0	2	1	62
05:30 PM	0	3	8	18	2	3	4	1	0	0	5	2	46
05:45 PM	1	0	10	13	2	2	2	2	0	0	7	1	40
Total	3	9	51	75	8	12	11	11	0	0	17	4	201
06:00 PM	0	0	15	15	1	4	1	2	0	0	8	0	46
06:15 PM	1	1	11	16	1	4	3	3	0	0	2	0	42
Grand Total	87	44	172	215	31	33	25	71	0	6	45	77	806
Apprch %	28.7	14.5	56.8	77.1	11.1	11.8	26	74	0	4.7	35.2	60.2	
Total %	10.8	5.5	21.3	26.7	3.8	4.1	3.1	8.8	0	0.7	5.6	9.6	

Transportation Studies, Inc.

2860 Walnut Avenue, Suite C
Tustin, CA. 92780

File Name : H0905008
Site Code : 00000000
Start Date : 4/29/2009
Page No : 2

	WHITTIER AVENUE Southbound				17TH STREET Westbound				WHITTIER AVENUE Northbound				17TH STREET Eastbound				
Start Time	Right	Thru	Left	App. Total	Right	Thru	Left	App. Total	Right	Thru	Left	App. Total	Right	Thru	Left	App. Total	Int. Total
Peak Hour Analysis From 07:00 AM to 08:45 AM - Peak 1 of 1																	
Peak Hour for Entire Intersection Begins at 07:15 AM																	
07:15 AM	4	5	9	18	**10**	0	0	**10**	0	3	0	3	1	**1**	6	8	39
07:30 AM	8	5	**11**	24	9	0	**1**	10	**1**	**13**	0	**14**	**4**	1	6	11	59
07:45 AM	20	**8**	0	28	1	0	0	1	0	11	0	11	0	0	**25**	**25**	**65**
08:00 AM	**21**	5	4	**30**	4	0	0	4	1	8	0	9	0	0	19	19	62
Total Volume	53	23	24	100	24	0	1	25	2	35	0	37	5	2	56	63	225
% App. Total	53	23	24		96	0	4		5.4	94.6	0		7.9	3.2	88.9		
PHF	.631	.719	.545	.833	.600	.000	.250	.625	.500	.673	.000	.661	.313	.500	.560	.630	.865

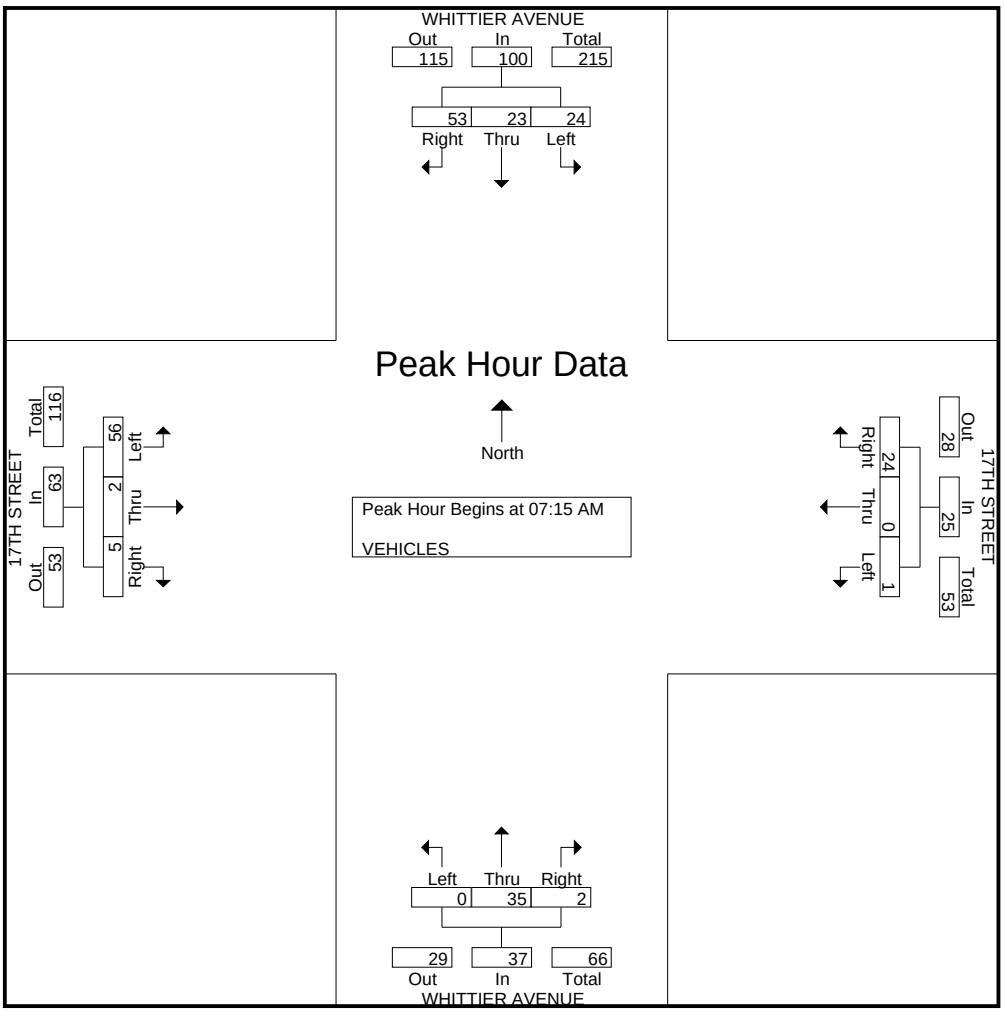

Transportation Studies, Inc.

2860 Walnut Avenue, Suite C
Tustin, CA. 92780

File Name : H0905008
Site Code : 00000000
Start Date : 4/29/2009
Page No : 3

	WHITTIER AVENUE Southbound				17TH STREET Westbound				WHITTIER AVENUE Northbound				17TH STREET Eastbound				
Start Time	Right	Thru	Left	App. Total	Right	Thru	Left	App. Total	Right	Thru	Left	App. Total	Right	Thru	Left	App. Total	Int. Total
Peak Hour Analysis From 04:30 PM to 06:15 PM - Peak 1 of 1																	
Peak Hour for Entire Intersection Begins at 04:30 PM																	
04:30 PM	0	1	14	15	16	2	**5**	23	1	2	0	3	0	**6**	0	**6**	47
04:45 PM	**1**	2	15	18	**23**	**3**	2	28	2	1	0	3	0	3	**1**	4	53
05:00 PM	1	2	16	19	22	1	2	25	2	**4**	0	6	0	3	0	3	53
05:15 PM	1	**4**	**17**	**22**	22	3	5	**30**	**3**	4	0	**7**	0	2	1	3	**62**
Total Volume	3	9	62	74	83	9	14	106	8	11	0	19	0	14	2	16	215
% App. Total	4.1	12.2	83.8		78.3	8.5	13.2		42.1	57.9	0		0	87.5	12.5		
PHF	.750	.563	.912	.841	.902	.750	.700	.883	.667	.688	.000	.679	.000	.583	.500	.667	.867

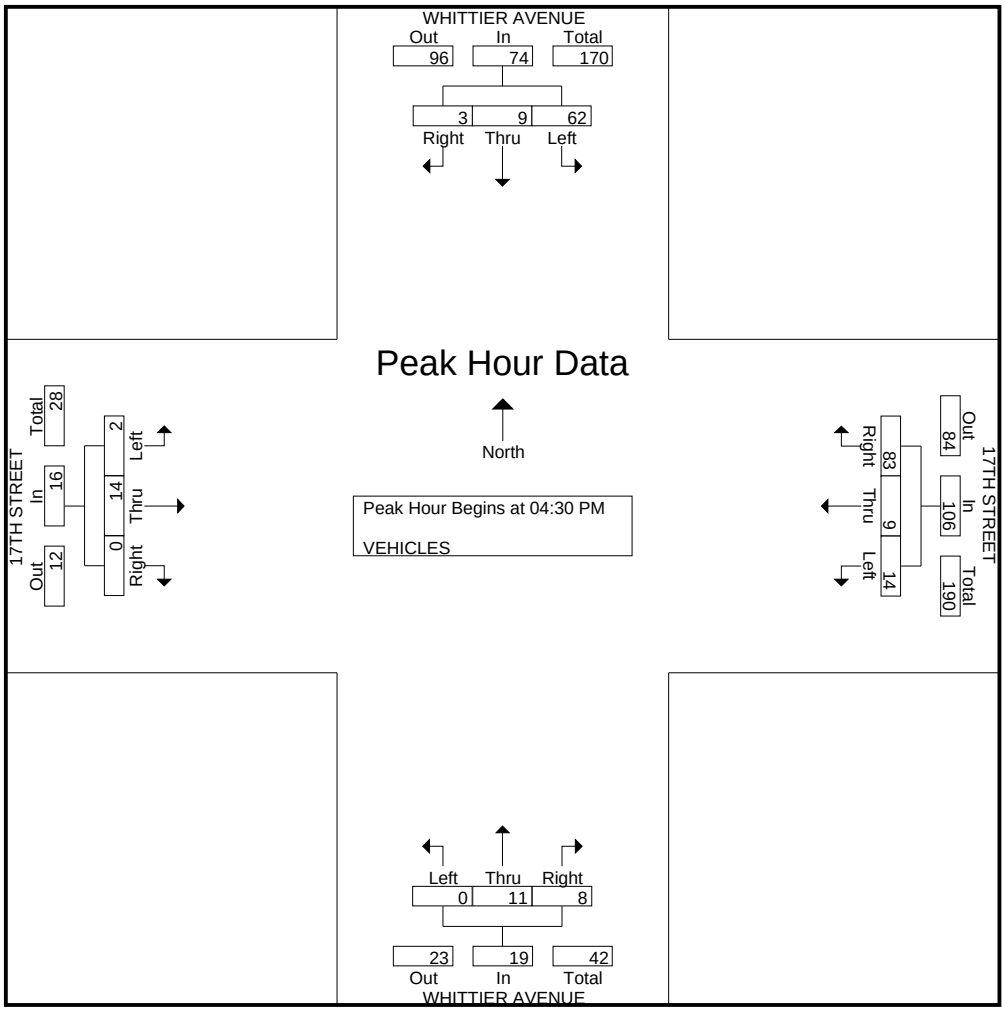

Transportation Studies, Inc.

2860 Walnut Avenue, Suite C
Tustin, CA. 92780

City: COSTA MESA
N-S Direction: MONROVIA AVENUE
E-W Direction: 17TH STREET

File Name : H0905009
Site Code : 00003872
Start Date : 5/5/2009
Page No : 1

Groups Printed- Vehicles

	MONROVIA AVENUE Southbound			17TH STREET Westbound			MONROVIA AVENUE Northbound			17TH STREET Eastbound			
Start Time	Right	Thru	Left	Right	Thru	Left	Right	Thru	Left	Right	Thru	Left	Int. Total
Factor	1.0	1.0	1.0	1.0	1.0	1.0	1.0	1.0	1.0	1.0	1.0	1.0	
07:00 AM	3	16	7	5	11	13	3	13	5	10	16	3	105
07:15 AM	5	10	8	3	18	9	6	8	3	4	18	3	95
07:30 AM	2	11	3	8	18	16	9	20	12	9	12	2	122
07:45 AM	2	16	7	16	34	21	19	23	8	12	23	7	188
Total	12	53	25	32	81	59	37	64	28	35	69	15	510
08:00 AM	2	18	7	16	33	21	18	18	11	6	16	5	171
08:15 AM	3	32	9	10	36	15	14	28	11	7	23	2	190
08:30 AM	5	20	3	14	32	10	12	19	6	7	13	0	141
08:45 AM	2	20	8	19	41	10	2	25	4	6	28	3	168
Total	12	90	27	59	142	56	46	90	32	26	80	10	670
*** BREAK ***													
04:30 PM	1	20	14	19	16	7	19	39	8	13	13	0	169
04:45 PM	8	16	9	8	18	10	9	22	3	10	12	3	128
Total	9	36	23	27	34	17	28	61	11	23	25	3	297
05:00 PM	1	12	9	10	23	3	10	30	7	14	21	3	143
05:15 PM	2	17	11	10	20	1	8	29	7	6	33	8	152
05:30 PM	8	23	12	16	18	5	6	17	2	9	16	2	134
05:45 PM	4	10	10	8	21	5	11	21	5	10	23	3	131
Total	15	62	42	44	82	14	35	97	21	39	93	16	560
06:00 PM	3	18	9	8	18	5	3	21	2	3	18	3	111
06:15 PM	2	14	8	7	18	3	4	21	5	9	11	3	105
Grand Total	53	273	134	177	375	154	153	354	99	135	296	50	2253
Apprch %	11.5	59.3	29.1	25.1	53.1	21.8	25.2	58.4	16.3	28.1	61.5	10.4	
Total %	2.4	12.1	5.9	7.9	16.6	6.8	6.8	15.7	4.4	6	13.1	2.2	

Transportation Studies, Inc.

2860 Walnut Avenue, Suite C
Tustin, CA. 92780

File Name : H0905009
Site Code : 00003872
Start Date : 5/5/2009
Page No : 2

	MONROVIA AVENUE Southbound				17TH STREET Westbound				MONROVIA AVENUE Northbound				17TH STREET Eastbound				
Start Time	Right	Thru	Left	App. Total	Right	Thru	Left	App. Total	Right	Thru	Left	App. Total	Right	Thru	Left	App. Total	Int. Total
Peak Hour Analysis From 07:00 AM to 08:45 AM - Peak 1 of 1																	
Peak Hour for Entire Intersection Begins at 07:45 AM																	
07:45 AM	2	16	7	25	**16**	34	**21**	**71**	**19**	23	8	50	**12**	**23**	**7**	**42**	188
08:00 AM	2	18	7	27	16	33	21	70	18	18	**11**	47	6	16	5	27	171
08:15 AM	3	**32**	**9**	**44**	10	**36**	15	61	14	**28**	11	**53**	7	23	2	32	**190**
08:30 AM	**5**	20	3	28	14	32	10	56	12	19	6	37	7	13	0	20	141
Total Volume	12	86	26	124	56	135	67	258	63	88	36	187	32	75	14	121	690
% App. Total	9.7	69.4	21		21.7	52.3	26		33.7	47.1	19.3		26.4	62	11.6		
PHF	.600	.672	.722	.705	.875	.938	.798	.908	.829	.786	.818	.882	.667	.815	.500	.720	.908

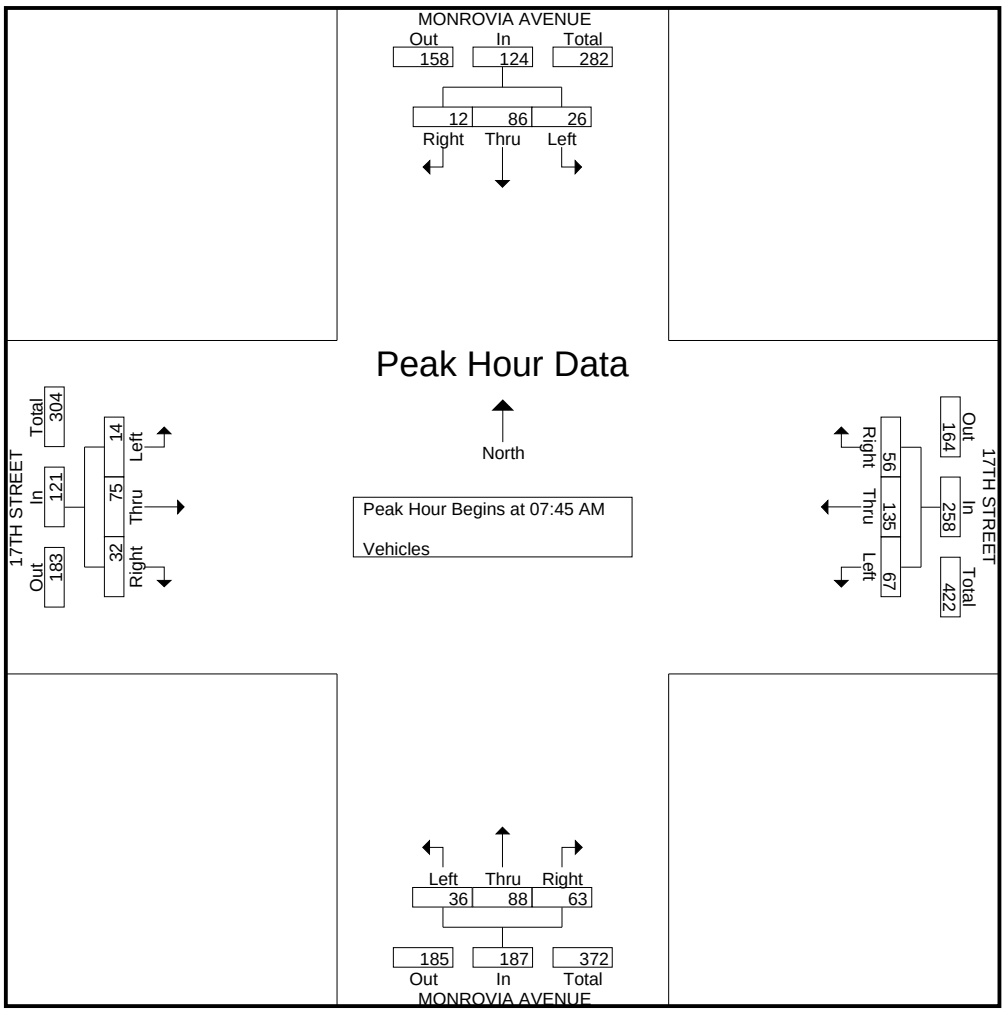

Transportation Studies, Inc.

2860 Walnut Avenue, Suite C
Tustin, CA. 92780

File Name : H0905009
Site Code : 00003872
Start Date : 5/5/2009
Page No : 3

	MONROVIA AVENUE Southbound				17TH STREET Westbound				MONROVIA AVENUE Northbound				17TH STREET Eastbound				
Start Time	Right	Thru	Left	App. Total	Right	Thru	Left	App. Total	Right	Thru	Left	App. Total	Right	Thru	Left	App. Total	Int. Total
Peak Hour Analysis From 04:30 PM to 06:15 PM - Peak 1 of 1																	
Peak Hour for Entire Intersection Begins at 04:30 PM																	
04:30 PM	1	**20**	**14**	**35**	**19**	16	7	**42**	**19**	**39**	**8**	**66**	13	13	0	26	**169**
04:45 PM	**8**	16	9	33	8	18	**10**	36	9	22	3	34	10	12	3	25	128
05:00 PM	1	12	9	22	10	**23**	3	36	10	30	7	47	**14**	21	3	38	143
05:15 PM	2	17	11	30	10	20	1	31	8	29	7	44	6	**33**	**8**	**47**	152
Total Volume	12	65	43	120	47	77	21	145	46	120	25	191	43	79	14	136	592
% App. Total	10	54.2	35.8		32.4	53.1	14.5		24.1	62.8	13.1		31.6	58.1	10.3		
PHF	.375	.813	.768	.857	.618	.837	.525	.863	.605	.769	.781	.723	.768	.598	.438	.723	.876

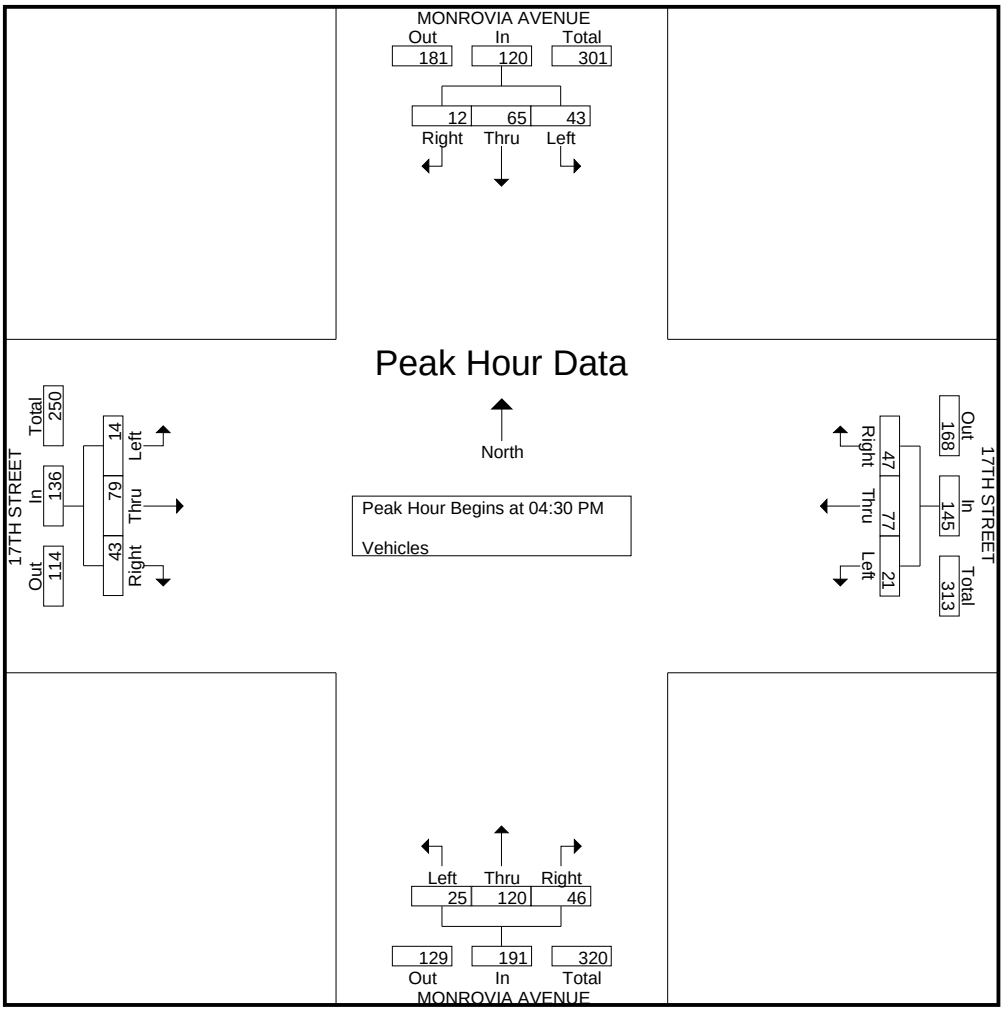

Transportation Studies, Inc.

2860 Walnut Avenue, Suite C
Tustin, CA. 92780

City: COSTA MESA
N-S Direction: PLACENTIA AVENUE
E-W Direction: 17TH STREET

File Name : H0905003
Site Code : 00000246
Start Date : 5/7/2009
Page No : 1

Groups Printed- Vehicles

	PLACENTIA AVENUE Southbound			17TH STREET Westbound			PLACENTIA AVENUE Northbound			17TH STREET Eastbound			
Start Time	Right	Thru	Left	Right	Thru	Left	Right	Thru	Left	Right	Thru	Left	Int. Total
Factor	1.0	1.0	1.0	1.0	1.0	1.0	1.0	1.0	1.0	1.0	1.0	1.0	
07:00 AM	6	128	27	15	16	9	14	57	9	4	16	3	304
07:15 AM	15	95	31	16	17	6	8	60	7	4	23	3	285
07:30 AM	25	110	32	20	30	10	14	85	13	7	31	4	381
07:45 AM	20	148	33	28	53	11	18	95	13	9	46	4	478
Total	66	481	123	79	116	36	54	297	42	24	116	14	1448
08:00 AM	24	146	42	16	45	10	13	105	27	4	38	1	471
08:15 AM	15	112	45	20	33	12	13	95	18	6	31	5	405
08:30 AM	18	131	46	16	31	11	15	83	31	12	26	2	422
08:45 AM	7	135	38	13	39	15	21	82	15	9	24	8	406
Total	64	524	171	65	148	48	62	365	91	31	119	16	1704
*** BREAK ***													
04:30 PM	8	86	28	46	26	5	20	157	10	16	48	16	466
04:45 PM	6	90	33	39	28	13	17	166	18	3	30	11	454
Total	14	176	61	85	54	18	37	323	28	19	78	27	920
05:00 PM	6	103	27	50	25	11	23	179	15	8	40	11	498
05:15 PM	6	108	25	52	29	8	9	166	6	7	33	14	463
05:30 PM	4	90	27	43	28	7	19	141	2	10	39	9	419
05:45 PM	3	92	25	47	26	6	9	112	5	10	25	14	374
Total	19	393	104	192	108	32	60	598	28	35	137	48	1754
06:00 PM	10	94	27	48	31	8	12	74	7	6	22	13	352
06:15 PM	9	69	24	34	18	4	16	110	5	7	21	11	328
Grand Total	182	1737	510	503	475	146	241	1767	201	122	493	129	6506
Apprch %	7.5	71.5	21	44.8	42.3	13	10.9	80	9.1	16.4	66.3	17.3	
Total %	2.8	26.7	7.8	7.7	7.3	2.2	3.7	27.2	3.1	1.9	7.6	2	

Transportation Studies, Inc.

2860 Walnut Avenue, Suite C
Tustin, CA. 92780

File Name : H0905003
Site Code : 00000246
Start Date : 5/7/2009
Page No : 2

	PLACENTIA AVENUE Southbound				17TH STREET Westbound				PLACENTIA AVENUE Northbound				17TH STREET Eastbound				
Start Time	Right	Thru	Left	App. Total	Right	Thru	Left	App. Total	Right	Thru	Left	App. Total	Right	Thru	Left	App. Total	Int. Total
Peak Hour Analysis From 07:00 AM to 08:45 AM - Peak 1 of 1																	
Peak Hour for Entire Intersection Begins at 07:45 AM																	
07:45 AM	20	**148**	33	201	**28**	**53**	11	**92**	**18**	95	13	126	9	**46**	4	**59**	**478**
08:00 AM	**24**	146	42	**212**	16	45	10	71	13	**105**	27	**145**	4	38	1	43	471
08:15 AM	15	112	45	172	20	33	**12**	65	13	95	18	126	6	31	**5**	42	405
08:30 AM	18	131	**46**	195	16	31	11	58	15	83	**31**	129	**12**	26	2	40	422
Total Volume	77	537	166	780	80	162	44	286	59	378	89	526	31	141	12	184	1776
% App. Total	9.9	68.8	21.3		28	56.6	15.4		11.2	71.9	16.9		16.8	76.6	6.5		
PHF	.802	.907	.902	.920	.714	.764	.917	.777	.819	.900	.718	.907	.646	.766	.600	.780	.929

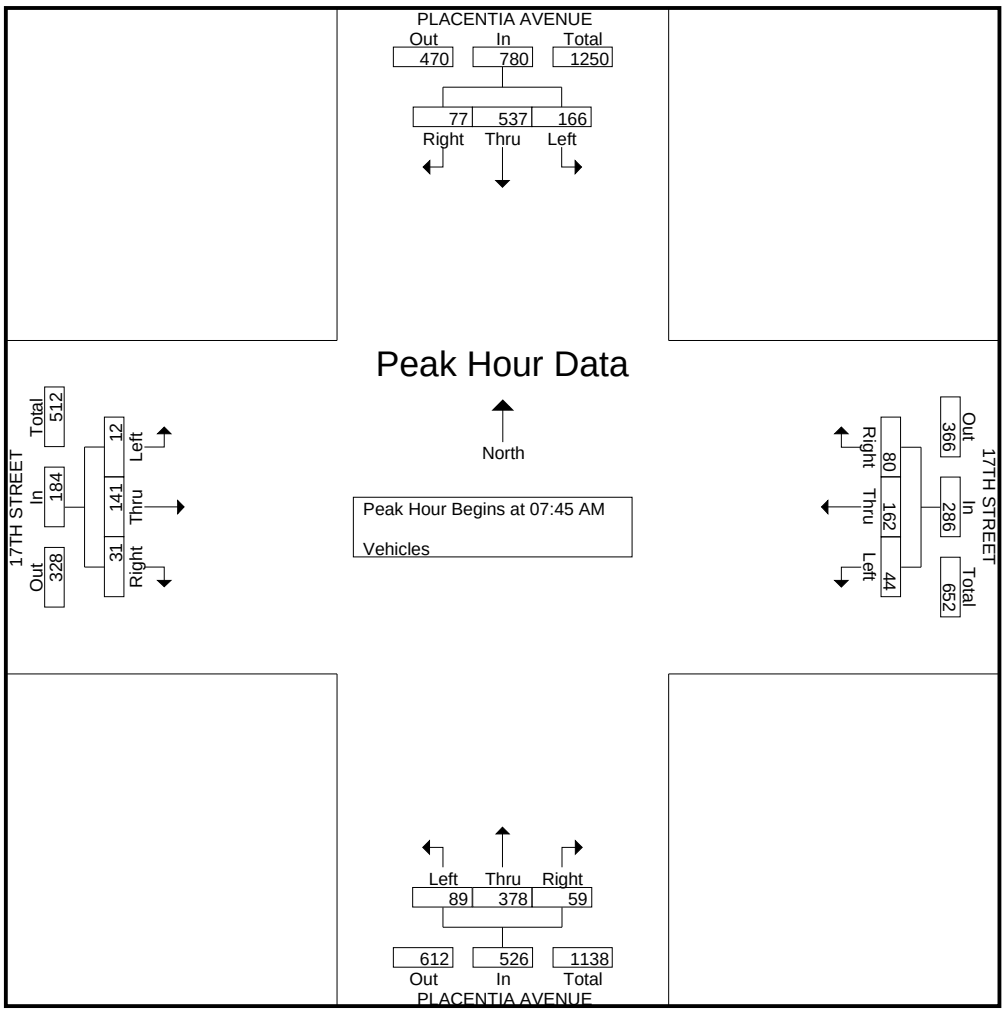

Transportation Studies, Inc.

2860 Walnut Avenue, Suite C
Tustin, CA. 92780

File Name : H0905003
Site Code : 00000246
Start Date : 5/7/2009
Page No : 3

	PLACENTIA AVENUE Southbound				17TH STREET Westbound				PLACENTIA AVENUE Northbound				17TH STREET Eastbound				
Start Time	Right	Thru	Left	App. Total	Right	Thru	Left	App. Total	Right	Thru	Left	App. Total	Right	Thru	Left	App. Total	Int. Total
Peak Hour Analysis From 04:30 PM to 06:15 PM - Peak 1 of 1																	
Peak Hour for Entire Intersection Begins at 04:30 PM																	
04:30 PM	**8**	86	28	122	46	26	5	77	20	157	10	187	**16**	**48**	**16**	**80**	466
04:45 PM	6	90	**33**	129	39	28	**13**	80	17	166	**18**	201	3	30	11	44	454
05:00 PM	6	103	27	136	50	25	11	86	**23**	**179**	15	**217**	8	40	11	59	**498**
05:15 PM	6	**108**	25	**139**	**52**	**29**	8	**89**	9	166	6	181	7	33	14	54	463
Total Volume	26	387	113	526	187	108	37	332	69	668	49	786	34	151	52	237	1881
% App. Total	4.9	73.6	21.5		56.3	32.5	11.1		8.8	85	6.2		14.3	63.7	21.9		
PHF	.813	.896	.856	.946	.899	.931	.712	.933	.750	.933	.681	.906	.531	.786	.813	.741	.944

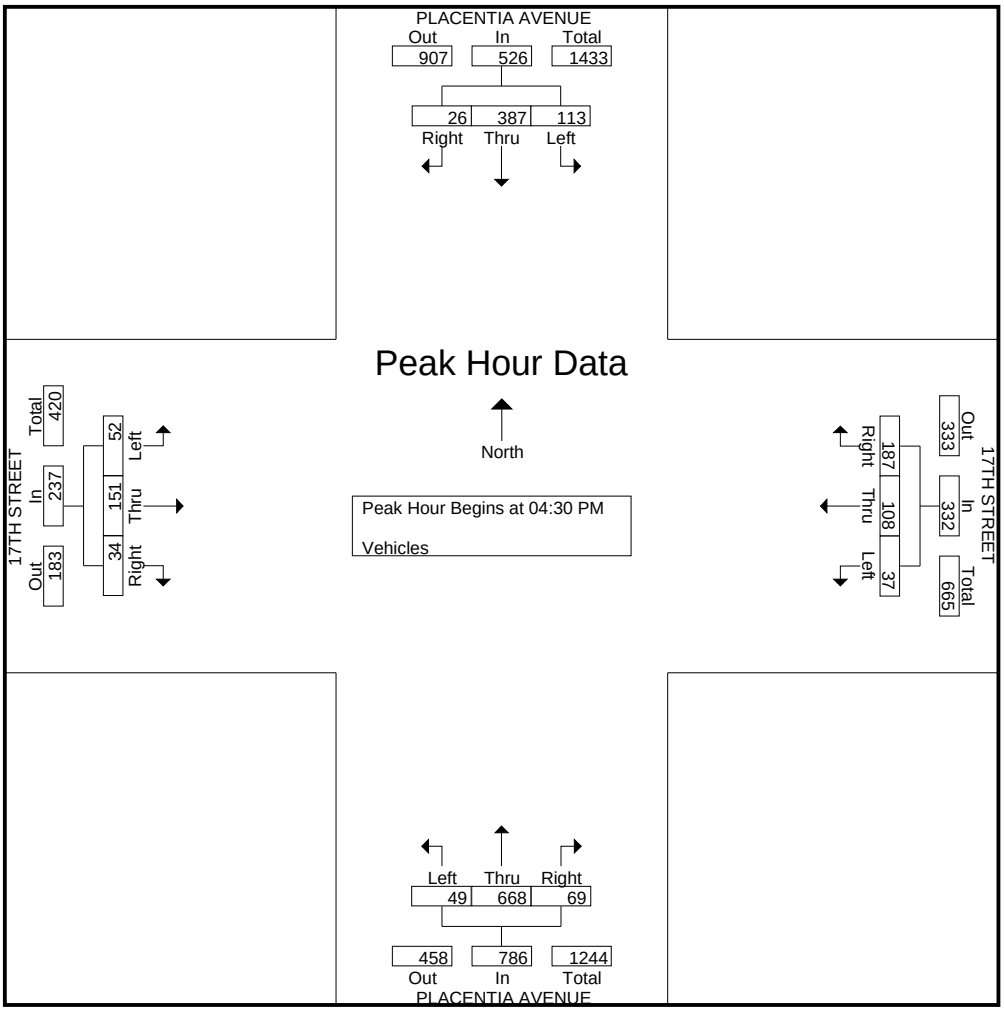

Transportation Studies, Inc.

2860 Walnut Avenue, Suite C
Tustin, CA. 92780

City: COSTA MESA
N-S Direction: POMONA AVENUE
E-W Direction: 17TH STREET

File Name : H0905010
Site Code : 00003872
Start Date : 5/6/2009
Page No : 1

Groups Printed- Vehicles

	POMONA AVENUE Southbound			17TH STREET Westbound			POMONA AVENUE Northbound			17TH STREET Eastbound			
Start Time	Right	Thru	Left	Right	Thru	Left	Right	Thru	Left	Right	Thru	Left	Int. Total
Factor	1.0	1.0	1.0	1.0	1.0	1.0	1.0	1.0	1.0	1.0	1.0	1.0	
07:00 AM	2	27	19	4	46	8	4	12	0	2	38	1	163
07:15 AM	13	23	18	7	50	9	3	5	1	2	51	3	185
07:30 AM	7	34	26	10	67	8	3	5	1	5	57	6	229
07:45 AM	26	28	29	13	76	15	1	11	2	6	89	5	301
Total	48	112	92	34	239	40	11	33	4	15	235	15	878
08:00 AM	15	29	24	18	68	24	8	9	3	6	74	1	279
08:15 AM	13	28	19	10	62	10	6	10	0	6	77	4	245
08:30 AM	5	31	29	12	67	11	4	10	1	11	63	2	246
08:45 AM	5	21	18	19	73	11	6	12	7	5	59	3	239
Total	38	109	90	59	270	56	24	41	11	28	273	10	1009
*** BREAK ***													
04:30 PM	11	26	18	20	79	12	16	26	2	1	73	19	303
04:45 PM	7	21	17	26	65	13	14	30	5	8	81	11	298
Total	18	47	35	46	144	25	30	56	7	9	154	30	601
05:00 PM	8	18	19	30	82	10	16	42	8	2	74	13	322
05:15 PM	6	21	11	26	71	8	7	32	5	5	80	9	281
05:30 PM	6	14	18	20	66	8	16	21	1	4	81	14	269
05:45 PM	4	24	26	33	59	12	16	15	3	1	72	5	270
Total	24	77	74	109	278	38	55	110	17	12	307	41	1142
06:00 PM	3	15	11	28	66	4	11	23	1	2	61	4	229
06:15 PM	2	12	14	22	68	4	8	11	5	0	72	1	219
Grand Total	133	372	316	298	1065	167	139	274	45	66	1102	101	4078
Apprch %	16.2	45.3	38.5	19.5	69.6	10.9	30.3	59.8	9.8	5.2	86.8	8	
Total %	3.3	9.1	7.7	7.3	26.1	4.1	3.4	6.7	1.1	1.6	27	2.5	

Transportation Studies, Inc.

2860 Walnut Avenue, Suite C
Tustin, CA. 92780

File Name : H0905010
Site Code : 00003872
Start Date : 5/6/2009
Page No : 2

	POMONA AVENUE Southbound				17TH STREET Westbound				POMONA AVENUE Northbound				17TH STREET Eastbound				
Start Time	Right	Thru	Left	App. Total	Right	Thru	Left	App. Total	Right	Thru	Left	App. Total	Right	Thru	Left	App. Total	Int. Total
Peak Hour Analysis From 07:00 AM to 08:45 AM - Peak 1 of 1																	
Peak Hour for Entire Intersection Begins at 07:45 AM																	
07:45 AM	**26**	28	**29**	**83**	13	**76**	15	104	1	**11**	2	14	6	**89**	**5**	**100**	**301**
08:00 AM	15	29	24	68	**18**	68	**24**	**110**	**8**	9	**3**	**20**	6	74	1	81	279
08:15 AM	13	28	19	60	10	62	10	82	6	10	0	16	6	77	4	87	245
08:30 AM	5	**31**	29	65	12	67	11	90	4	10	1	15	**11**	63	2	76	246
Total Volume	59	116	101	276	53	273	60	386	19	40	6	65	29	303	12	344	1071
% App. Total	21.4	42	36.6		13.7	70.7	15.5		29.2	61.5	9.2		8.4	88.1	3.5		
PHF	.567	.935	.871	.831	.736	.898	.625	.877	.594	.909	.500	.813	.659	.851	.600	.860	.890

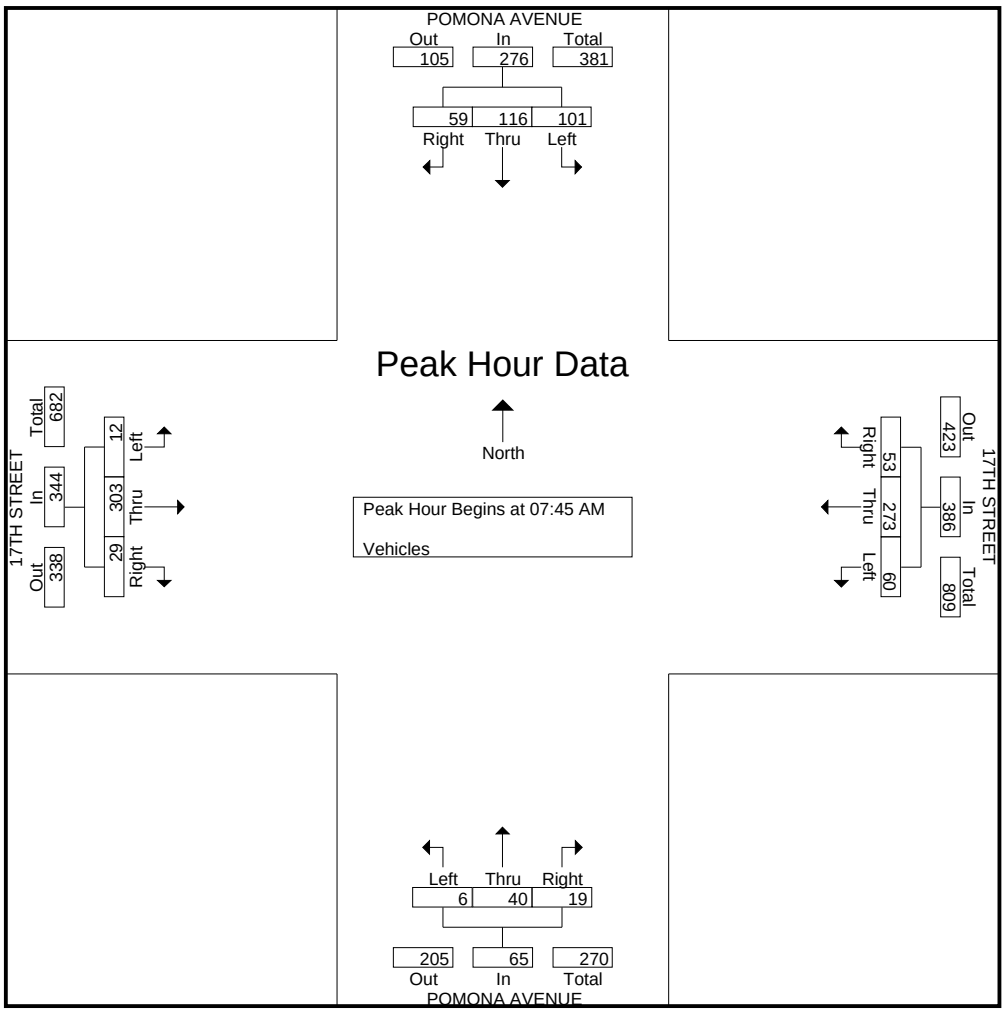

Transportation Studies, Inc.

2860 Walnut Avenue, Suite C
Tustin, CA. 92780

File Name : H0905010
Site Code : 00003872
Start Date : 5/6/2009
Page No : 3

	POMONA AVENUE Southbound				17TH STREET Westbound				POMONA AVENUE Northbound				17TH STREET Eastbound				
Start Time	Right	Thru	Left	App. Total	Right	Thru	Left	App. Total	Right	Thru	Left	App. Total	Right	Thru	Left	App. Total	Int. Total
Peak Hour Analysis From 04:30 PM to 06:15 PM - Peak 1 of 1																	
Peak Hour for Entire Intersection Begins at 04:30 PM																	
04:30 PM	**11**	**26**	18	**55**	20	79	12	111	**16**	26	2	44	1	73	**19**	93	303
04:45 PM	7	21	17	45	26	65	**13**	104	14	30	5	49	**8**	**81**	11	**100**	298
05:00 PM	8	18	**19**	45	**30**	**82**	10	**122**	16	**42**	**8**	**66**	2	74	13	89	**322**
05:15 PM	6	21	11	38	26	71	8	105	7	32	5	44	5	80	9	94	281
Total Volume	32	86	65	183	102	297	43	442	53	130	20	203	16	308	52	376	1204
% App. Total	17.5	47	35.5		23.1	67.2	9.7		26.1	64	9.9		4.3	81.9	13.8		
PHF	.727	.827	.855	.832	.850	.905	.827	.906	.828	.774	.625	.769	.500	.951	.684	.940	.935

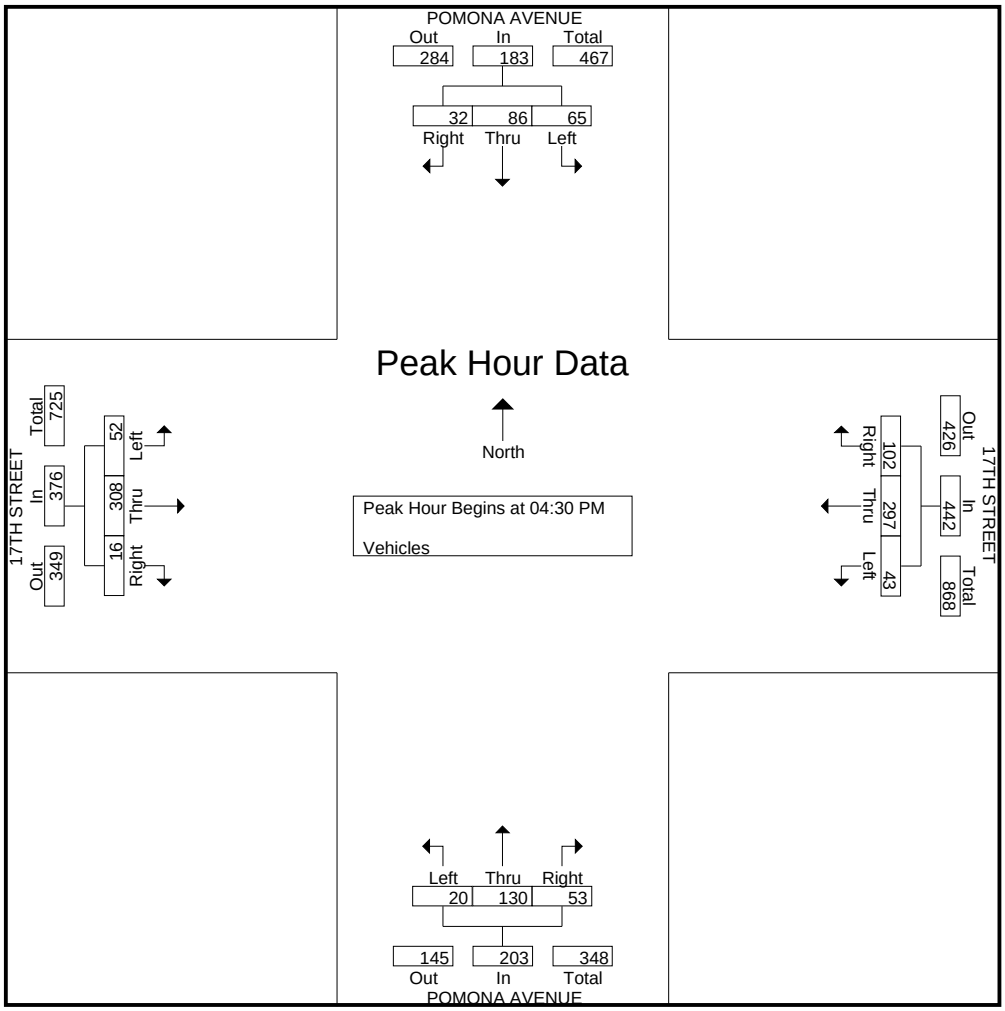

Transportation Studies, Inc.

2860 Walnut Avenue, Suite C
Tustin, CA. 92780

City: COSTA MESA
N-S Direction: SUPERIOR AVENUE
E-W Direction: 17TH STREET

File Name : H0905004
Site Code : 00002245
Start Date : 5/7/2009
Page No : 1

Groups Printed- Vehicles

	SUPERIOR AVENUE Southbound			17TH STREET Westbound			SUPERIOR AVENUE Northbound			17TH STREET Eastbound			
Start Time	Right	Thru	Left	Right	Thru	Left	Right	Thru	Left	Right	Thru	Left	Int. Total
Factor	1.0	1.0	1.0	1.0	1.0	1.0	1.0	1.0	1.0	1.0	1.0	1.0	
07:00 AM	12	56	10	5	57	63	149	17	4	3	72	2	450
07:15 AM	7	56	14	9	55	100	130	21	5	5	76	2	480
07:30 AM	5	50	16	6	80	93	185	22	2	7	95	0	561
07:45 AM	9	47	12	14	106	94	198	44	12	4	118	0	658
Total	33	209	52	34	298	350	662	104	23	19	361	4	2149
08:00 AM	11	61	11	19	94	68	158	27	15	16	84	2	566
08:15 AM	14	55	10	9	86	108	162	30	10	8	89	6	587
08:30 AM	16	46	6	9	78	89	167	23	11	13	79	2	539
08:45 AM	21	56	15	12	85	83	171	34	11	9	80	6	583
Total	62	218	42	49	343	348	658	114	47	46	332	16	2275
*** BREAK ***													
04:30 PM	29	65	24	20	85	99	146	56	33	15	144	5	721
04:45 PM	17	58	27	19	109	110	148	38	26	23	138	8	721
Total	46	123	51	39	194	209	294	94	59	38	282	13	1442
05:00 PM	18	78	23	25	111	107	145	49	22	7	121	5	711
05:15 PM	30	86	19	17	105	104	155	55	31	12	111	7	732
05:30 PM	19	65	20	20	111	102	172	42	21	23	127	5	727
05:45 PM	16	81	20	21	91	104	159	55	29	8	108	10	702
Total	83	310	82	83	418	417	631	201	103	50	467	27	2872
06:00 PM	21	80	36	22	97	90	144	39	18	14	114	4	679
06:15 PM	15	62	17	19	92	97	142	34	17	10	91	10	606
Grand Total	260	1002	280	246	1442	1511	2531	586	267	177	1647	74	10023
Apprch %	16.9	65	18.2	7.7	45.1	47.2	74.8	17.3	7.9	9.3	86.8	3.9	
Total %	2.6	10	2.8	2.5	14.4	15.1	25.3	5.8	2.7	1.8	16.4	0.7	

Transportation Studies, Inc.

2860 Walnut Avenue, Suite C
Tustin, CA. 92780

File Name : H0905004
Site Code : 00002245
Start Date : 5/7/2009
Page No : 2

	SUPERIOR AVENUE Southbound				17TH STREET Westbound				SUPERIOR AVENUE Northbound				17TH STREET Eastbound				
Start Time	Right	Thru	Left	App. Total	Right	Thru	Left	App. Total	Right	Thru	Left	App. Total	Right	Thru	Left	App. Total	Int. Total
Peak Hour Analysis From 07:00 AM to 08:45 AM - Peak 1 of 1																	
Peak Hour for Entire Intersection Begins at 07:30 AM																	
07:30 AM	5	50	**16**	71	6	80	93	179	185	22	2	209	7	95	0	102	561
07:45 AM	9	47	12	68	14	**106**	94	**214**	**198**	**44**	12	**254**	4	**118**	0	**122**	**658**
08:00 AM	11	**61**	11	**83**	**19**	94	68	181	158	27	**15**	200	**16**	84	2	102	566
08:15 AM	**14**	55	10	79	9	86	**108**	203	162	30	10	202	8	89	**6**	103	587
Total Volume	39	213	49	301	48	366	363	777	703	123	39	865	35	386	8	429	2372
% App. Total	13	70.8	16.3		6.2	47.1	46.7		81.3	14.2	4.5		8.2	90	1.9		
PHF	.696	.873	.766	.907	.632	.863	.840	.908	.888	.699	.650	.851	.547	.818	.333	.879	.901

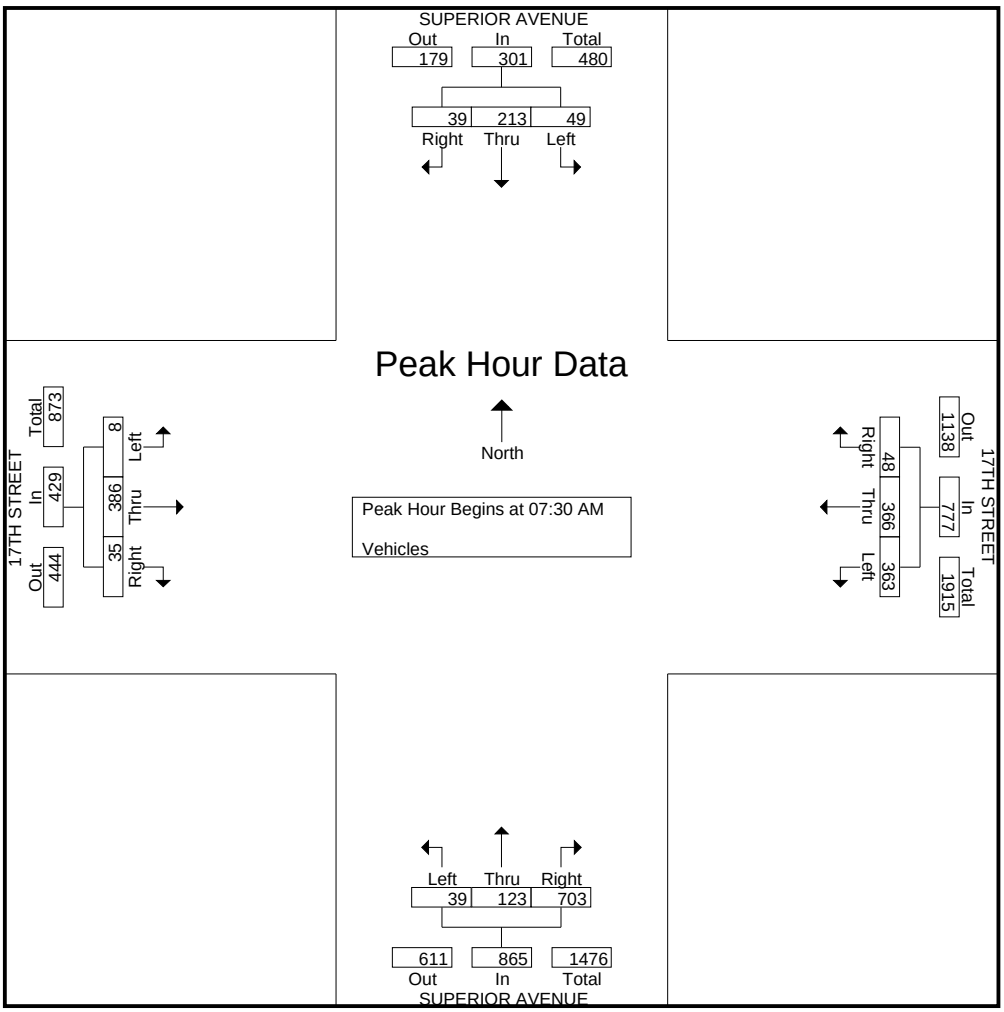

Transportation Studies, Inc.

2860 Walnut Avenue, Suite C
Tustin, CA. 92780

File Name : H0905004
Site Code : 00002245
Start Date : 5/7/2009
Page No : 3

	SUPERIOR AVENUE Southbound				17TH STREET Westbound				SUPERIOR AVENUE Northbound				17TH STREET Eastbound				
Start Time	Right	Thru	Left	App. Total	Right	Thru	Left	App. Total	Right	Thru	Left	App. Total	Right	Thru	Left	App. Total	Int. Total
Peak Hour Analysis From 04:30 PM to 06:15 PM - Peak 1 of 1																	
Peak Hour for Entire Intersection Begins at 04:45 PM																	
04:45 PM	17	58	**27**	102	19	109	**110**	238	148	38	26	212	**23**	**138**	**8**	**169**	721
05:00 PM	18	78	23	119	**25**	**111**	107	**243**	145	49	22	216	7	121	5	133	711
05:15 PM	**30**	**86**	19	**135**	17	105	104	226	155	**55**	**31**	**241**	12	111	7	130	**732**
05:30 PM	19	65	20	104	20	111	102	233	**172**	42	21	235	23	127	5	155	727
Total Volume	84	287	89	460	81	436	423	940	620	184	100	904	65	497	25	587	2891
% App. Total	18.3	62.4	19.3		8.6	46.4	45		68.6	20.4	11.1		11.1	84.7	4.3		
PHF	.700	.834	.824	.852	.810	.982	.961	.967	.901	.836	.806	.938	.707	.900	.781	.868	.987

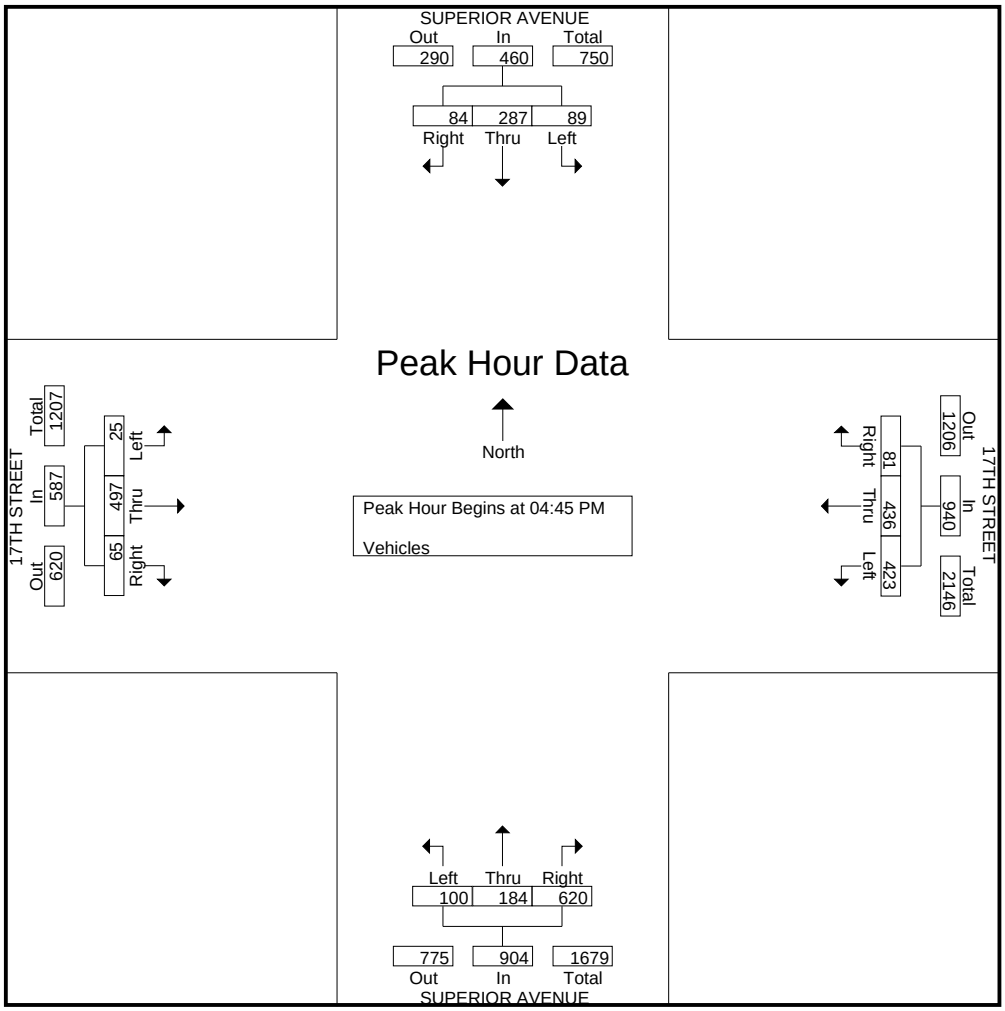

WILTEC

LOCATION: 17th

Phone: (626) 564-1944 Fax: (626) 564-1944 E-mail: info@wiltecusa.com

INTERSECTION TURNING MOVEMENT COUNT SUMMARY

CLIENT: CITY OF COSTA MESA
PROJECT: 2007 TRAFFIC COUNTS
DATE: THURSDAY MAY 3, 2007
PERIODS: 7:00 AM TO 9:00 AM AND 4:00 PM TO 6:00 PM
INTERSECTION: N/S NEWPORT BOULEVARD
E/W 17TH STREET
CITY: COSTA MESA

15 MIN COUNTS — 7:00 AM TO 9:00 AM

PERIOD	1 SBRT	2 SBTH	3 SBLT	4 WBRT	5 WBTH	6 WBLT	7 NBRT	8 NBTH	9 NBLT	10 EBRT	11 EBTH	12 EBLT	TOTAL
700-715	68	353	132	29	48	25	26	387	4	3	81	204	1360
715-730	96	387	153	27	90	41	45	445	8	3	112	195	1602
730-745	97	439	124	37	99	35	57	484	14	0	113	210	1709
745-800	63	415	108	28	101	30	65	410	13	1	89	183	1506
800-815	74	435	155	39	86	32	45	409	8	0	56	165	1504
815-830	88	483	161	40	106	42	38	451	14	2	80	186	1691
830-845	67	411	137	31	90	40	36	374	8	1	74	211	1480
845-900	83	442	95	42	76	31	44	411	15	4	93	201	1537

HOUR TOTALS

TIME	1 SBRT	2 SBTH	3 SBLT	4 WBRT	5 WBTH	6 WBLT	7 NBRT	8 NBTH	9 NBLT	10 EBRT	11 EBTH	12 EBLT	TOTAL
700-800	324	1594	517	121	338	131	193	1726	39	7	395	792	6177
715-815	330	1676	540	131	376	138	212	1748	43	4	370	753	6321
730-830	322	1772	548	144	392	139	205	1754	49	3	338	744	6410
745-845	292	1744	561	138	383	144	184	1644	43	4	299	745	6181
800-900	312	1771	548	152	358	145	163	1645	45	7	303	763	6212

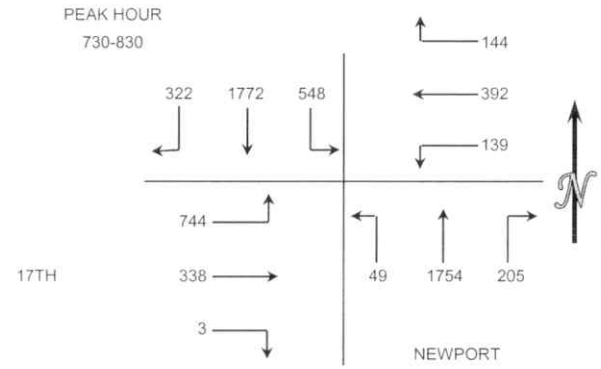

15 MIN COUNTS — 4:00 PM TO 6:00 PM

PERIOD	1 SBRT	2 SBTH	3 SBLT	4 WBRT	5 WBTH	6 WBLT	7 NBRT	8 NBTH	9 NBLT	10 EBRT	11 EBTH	12 EBLT	TOTAL
400-415	65	556	163	60	108	41	50	409	15	5	103	214	1789
415-430	90	533	200	37	128	53	29	390	6	1	84	171	1722
430-445	74	608	185	56	142	78	39	442	12	6	105	199	1946
445-500	95	549	178	36	125	54	32	426	12	7	96	157	1767
500-515	78	539	143	59	97	62	49	465	19	4	92	181	1788
515-530	93	573	194	46	111	77	46	451	19	5	92	156	1863
530-545	83	596	180	46	126	76	55	433	16	3	95	179	1888
545-600	93	565	172	44	110	69	31	407	13	4	109	150	1767

HOUR TOTALS

TIME	1 SBRT	2 SBTH	3 SBLT	4 WBRT	5 WBTH	6 WBLT	7 NBRT	8 NBTH	9 NBLT	10 EBRT	11 EBTH	12 EBLT	TOTAL
400-500	324	2246	726	189	503	226	150	1667	45	19	388	741	7224
415-515	337	2229	706	188	492	247	149	1723	49	18	377	708	7223
430-530	340	2269	700	197	475	271	166	1784	62	22	385	693	7364
445-545	349	2257	695	187	459	269	182	1775	66	19	375	673	7306
500-600	347	2273	689	195	444	284	181	1756	67	16	388	666	7306

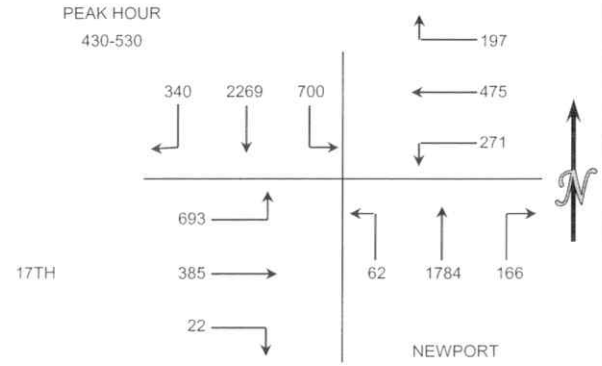

Transportation Studies, Inc.

2860 Walnut Avenue, Suite C
Tustin, CA. 92780

City: COSTA MESA
N-S Direction: ORANGE AVENUE
E-W Direction: 17TH STREET

File Name : H0906048
Site Code : 00000976
Start Date : 6/18/2009
Page No : 1

Groups Printed- Vehicles

	ORANGE AVENUE Southbound			17TH STREET Westbound			ORANGE AVENUE Northbound			17TH STREET Eastbound			
Start Time	Right	Thru	Left	Right	Thru	Left	Right	Thru	Left	Right	Thru	Left	Int. Total
Factor	1.0	1.0	1.0	1.0	1.0	1.0	1.0	1.0	1.0	1.0	1.0	1.0	
07:00 AM	9	16	15	7	85	8	9	22	11	22	120	3	327
07:15 AM	13	16	17	9	117	8	3	25	15	11	152	8	394
07:30 AM	10	29	31	18	149	6	10	34	29	16	193	15	540
07:45 AM	13	41	40	32	155	15	7	55	28	29	242	12	669
Total	45	102	103	66	506	37	29	136	83	78	707	38	1930
08:00 AM	24	45	32	37	174	10	7	45	29	22	164	9	598
08:15 AM	24	28	24	25	172	9	13	55	25	22	178	12	587
08:30 AM	17	27	27	27	191	6	10	33	24	13	182	9	566
08:45 AM	23	30	33	22	173	8	8	31	33	22	169	22	574
Total	88	130	116	111	710	33	38	164	111	79	693	52	2325
*** BREAK ***													
04:30 PM	22	53	49	49	203	21	29	58	28	31	227	36	806
04:45 PM	33	53	49	39	212	21	21	80	48	40	233	42	871
Total	55	106	98	88	415	42	50	138	76	71	460	78	1677
05:00 PM	33	56	53	51	219	20	14	62	41	49	228	33	859
05:15 PM	31	45	62	43	237	22	21	69	39	39	231	39	878
05:30 PM	24	50	50	65	227	20	12	65	40	29	218	26	826
05:45 PM	28	67	35	44	258	17	21	49	30	33	218	36	836
Total	116	218	200	203	941	79	68	245	150	150	895	134	3399
06:00 PM	19	68	46	54	292	23	9	58	49	34	205	25	882
06:15 PM	33	39	41	66	289	14	15	58	34	35	207	32	863
Grand Total	356	663	604	588	3153	228	209	799	503	447	3167	359	11076
Apprch %	21.9	40.9	37.2	14.8	79.4	5.7	13.8	52.9	33.3	11.3	79.7	9	
Total %	3.2	6	5.5	5.3	28.5	2.1	1.9	7.2	4.5	4	28.6	3.2	

Transportation Studies, Inc.

2860 Walnut Avenue, Suite C
Tustin, CA. 92780

File Name : H0906048
Site Code : 00000976
Start Date : 6/18/2009
Page No : 2

	ORANGE AVENUE Southbound				17TH STREET Westbound				ORANGE AVENUE Northbound				17TH STREET Eastbound				
Start Time	Right	Thru	Left	App. Total	Right	Thru	Left	App. Total	Right	Thru	Left	App. Total	Right	Thru	Left	App. Total	Int. Total
Peak Hour Analysis From 07:00 AM to 08:45 AM - Peak 1 of 1																	
Peak Hour for Entire Intersection Begins at 07:45 AM																	
07:45 AM	13	41	**40**	94	32	155	**15**	202	7	**55**	28	90	**29**	**242**	**12**	**283**	**669**
08:00 AM	**24**	**45**	32	**101**	**37**	174	10	221	7	45	**29**	81	22	164	9	195	598
08:15 AM	24	28	24	76	25	172	9	206	**13**	55	25	**93**	22	178	12	212	587
08:30 AM	17	27	27	71	27	**191**	6	**224**	10	33	24	67	13	182	9	204	566
Total Volume	78	141	123	342	121	692	40	853	37	188	106	331	86	766	42	894	2420
% App. Total	22.8	41.2	36		14.2	81.1	4.7		11.2	56.8	32		9.6	85.7	4.7		
PHF	.813	.783	.769	.847	.818	.906	.667	.952	.712	.855	.914	.890	.741	.791	.875	.790	.904

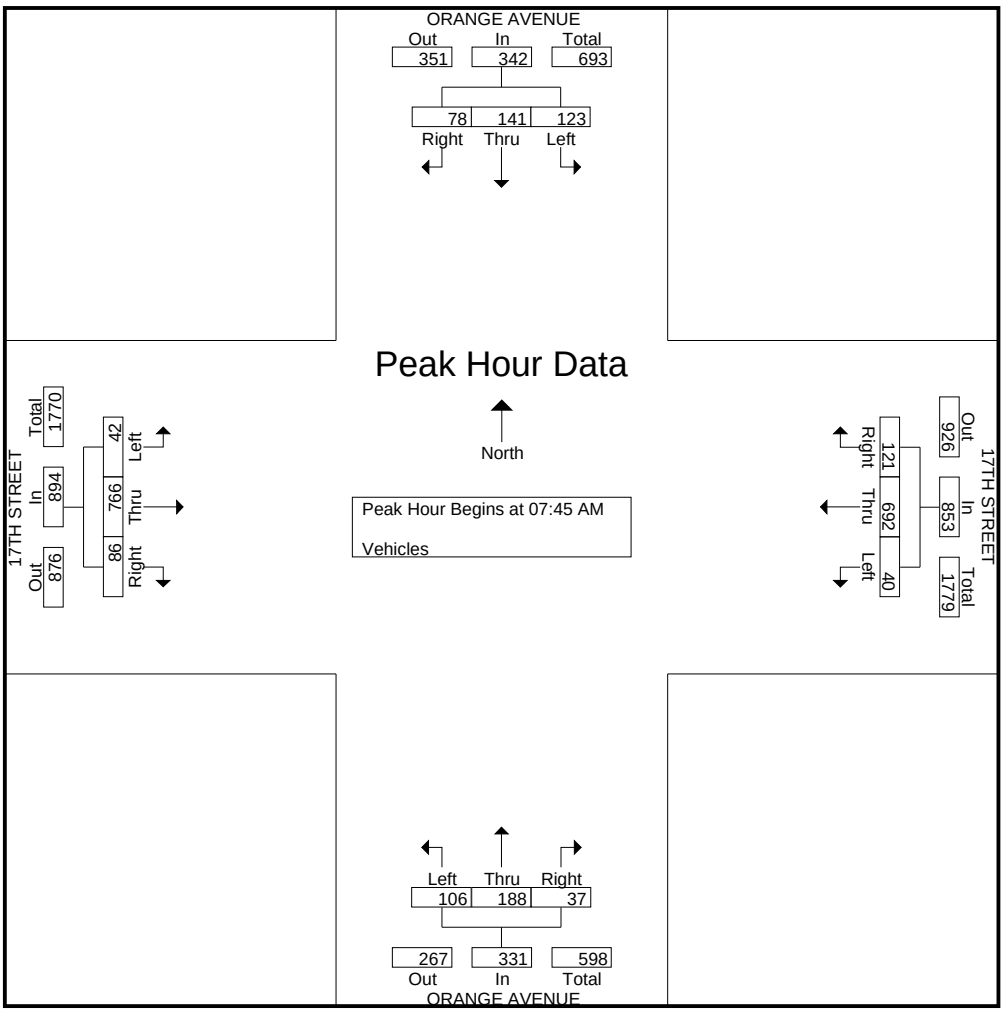

Transportation Studies, Inc.

2860 Walnut Avenue, Suite C
Tustin, CA. 92780

File Name : H0906048
Site Code : 00000976
Start Date : 6/18/2009
Page No : 3

	ORANGE AVENUE Southbound				17TH STREET Westbound				ORANGE AVENUE Northbound				17TH STREET Eastbound				
Start Time	Right	Thru	Left	App. Total	Right	Thru	Left	App. Total	Right	Thru	Left	App. Total	Right	Thru	Left	App. Total	Int. Total
Peak Hour Analysis From 04:30 PM to 06:15 PM - Peak 1 of 1																	
Peak Hour for Entire Intersection Begins at 04:45 PM																	
04:45 PM	**33**	53	49	135	39	212	21	272	**21**	**80**	**48**	**149**	40	**233**	**42**	**315**	871
05:00 PM	33	**56**	53	**142**	51	219	20	290	14	62	41	117	**49**	228	33	310	859
05:15 PM	31	45	**62**	138	43	**237**	**22**	302	21	69	39	129	39	231	39	309	**878**
05:30 PM	24	50	50	124	**65**	227	20	**312**	12	65	40	117	29	218	26	273	826
Total Volume	121	204	214	539	198	895	83	1176	68	276	168	512	157	910	140	1207	3434
% App. Total	22.4	37.8	39.7		16.8	76.1	7.1		13.3	53.9	32.8		13	75.4	11.6		
PHF	.917	.911	.863	.949	.762	.944	.943	.942	.810	.863	.875	.859	.801	.976	.833	.958	.978

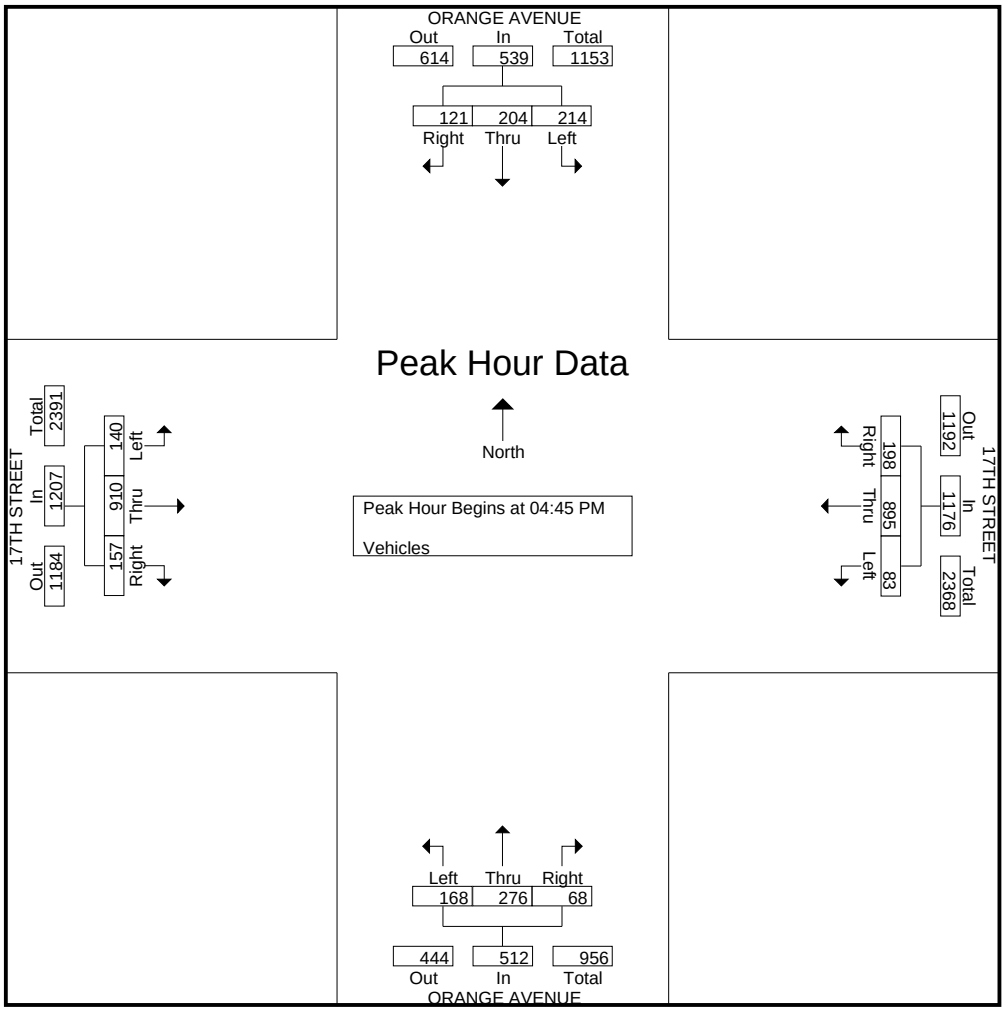

Transportation Studies, Inc.

2860 Walnut Avenue, Suite C
Tustin, CA. 92780

City: COSTA MESA
N-S Direction: SANTA ANA AVENUE
E-W Direction: 17TH STREET

File Name : H0906049
Site Code : 00002246
Start Date : 6/18/2009
Page No : 1

Groups Printed- Vehicles

	SANTA ANA AVENUE Southbound			17TH STREET Westbound			SANTA ANA AVENUE Northbound			17TH STREET Eastbound			
Start Time	Right	Thru	Left	Right	Thru	Left	Right	Thru	Left	Right	Thru	Left	Int. Total
Factor	1.0	1.0	1.0	1.0	1.0	1.0	1.0	1.0	1.0	1.0	1.0	1.0	
07:00 AM	3	14	5	2	88	6	12	18	11	5	113	1	278
07:15 AM	10	19	6	8	118	6	10	15	12	14	156	2	376
07:30 AM	10	34	9	9	158	6	25	27	18	9	199	5	509
07:45 AM	19	38	22	16	183	6	19	33	27	19	239	8	629
Total	42	105	42	35	547	24	66	93	68	47	707	16	1792
08:00 AM	5	22	19	14	196	10	20	38	28	9	150	12	523
08:15 AM	21	21	21	15	170	11	14	25	19	4	208	6	535
08:30 AM	17	25	12	13	212	13	17	24	15	9	190	8	555
08:45 AM	15	22	20	8	199	8	16	21	23	12	201	7	552
Total	58	90	72	50	777	42	67	108	85	34	749	33	2165
*** BREAK ***													
04:30 PM	11	44	28	25	244	25	17	44	34	17	254	16	759
04:45 PM	20	35	21	17	246	33	20	35	21	13	260	15	736
Total	31	79	49	42	490	58	37	79	55	30	514	31	1495
05:00 PM	17	40	27	29	263	37	13	43	22	21	251	19	782
05:15 PM	28	49	26	21	271	40	32	45	29	18	287	27	873
05:30 PM	16	47	29	35	265	33	23	31	29	16	224	18	766
05:45 PM	24	22	28	49	291	32	20	33	34	22	211	22	788
Total	85	158	110	134	1090	142	88	152	114	77	973	86	3209
06:00 PM	20	52	32	25	310	42	19	64	34	13	215	29	855
06:15 PM	29	38	25	30	331	26	28	50	34	14	221	19	845
Grand Total	265	522	330	316	3545	334	305	546	390	215	3379	214	10361
Apprch %	23.7	46.7	29.5	7.5	84.5	8	24.6	44	31.4	5.6	88.7	5.6	
Total %	2.6	5	3.2	3	34.2	3.2	2.9	5.3	3.8	2.1	32.6	2.1	

Transportation Studies, Inc.

2860 Walnut Avenue, Suite C
Tustin, CA. 92780

File Name : H0906049
Site Code : 00002246
Start Date : 6/18/2009
Page No : 2

	SANTA ANA AVENUE Southbound				17TH STREET Westbound				SANTA ANA AVENUE Northbound				17TH STREET Eastbound				
Start Time	Right	Thru	Left	App. Total	Right	Thru	Left	App. Total	Right	Thru	Left	App. Total	Right	Thru	Left	App. Total	Int. Total
Peak Hour Analysis From 07:00 AM to 08:45 AM - Peak 1 of 1																	
Peak Hour for Entire Intersection Begins at 07:45 AM																	
07:45 AM	19	**38**	**22**	**79**	**16**	183	6	205	19	33	27	79	**19**	**239**	8	**266**	**629**
08:00 AM	5	22	19	46	14	196	10	220	**20**	**38**	**28**	**86**	9	150	**12**	171	523
08:15 AM	**21**	21	21	63	15	170	11	196	14	25	19	58	4	208	6	218	535
08:30 AM	17	25	12	54	13	**212**	**13**	**238**	17	24	15	56	9	190	8	207	555
Total Volume	62	106	74	242	58	761	40	859	70	120	89	279	41	787	34	862	2242
% App. Total	25.6	43.8	30.6		6.8	88.6	4.7		25.1	43	31.9		4.8	91.3	3.9		
PHF	.738	.697	.841	.766	.906	.897	.769	.902	.875	.789	.795	.811	.539	.823	.708	.810	.891

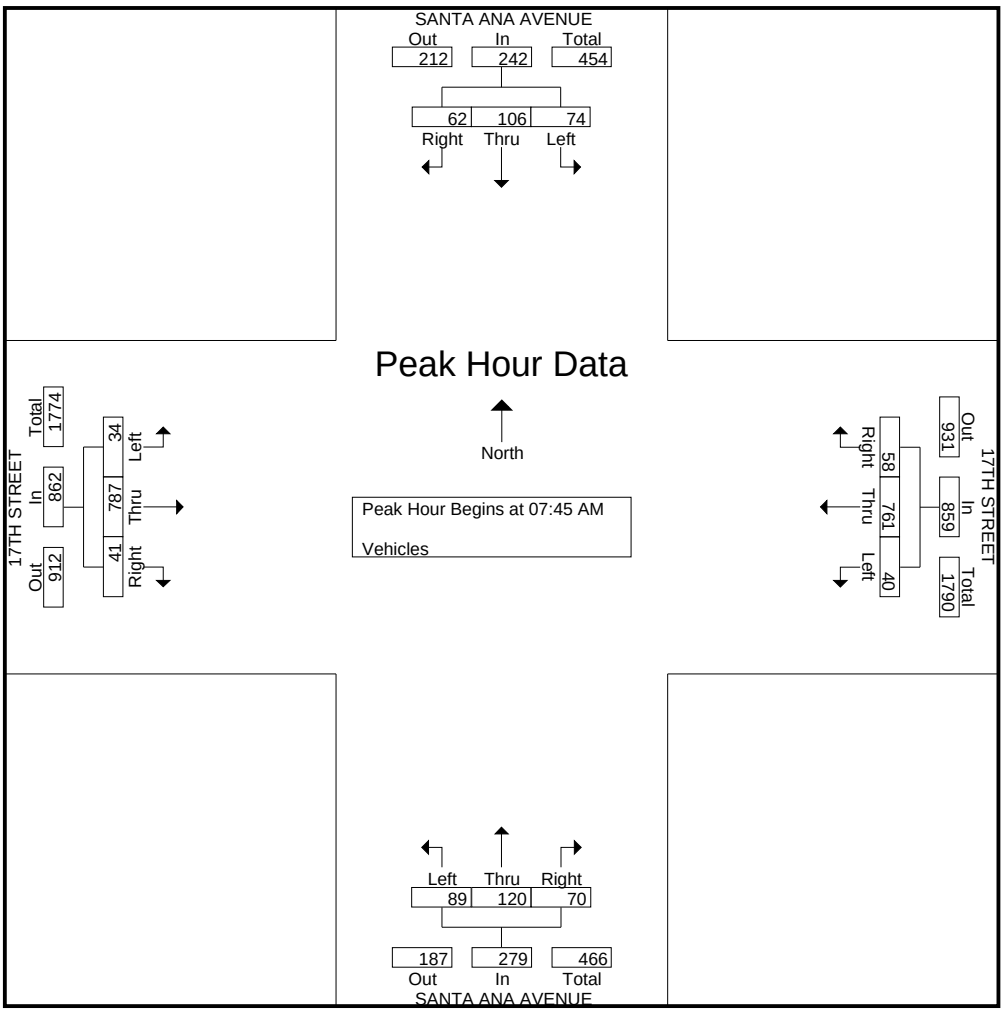

Transportation Studies, Inc.

2860 Walnut Avenue, Suite C
Tustin, CA. 92780

File Name : H0906049
Site Code : 00002246
Start Date : 6/18/2009
Page No : 3

	SANTA ANA AVENUE Southbound				17TH STREET Westbound				SANTA ANA AVENUE Northbound				17TH STREET Eastbound				
Start Time	Right	Thru	Left	App. Total	Right	Thru	Left	App. Total	Right	Thru	Left	App. Total	Right	Thru	Left	App. Total	Int. Total
Peak Hour Analysis From 04:30 PM to 06:15 PM - Peak 1 of 1																	
Peak Hour for Entire Intersection Begins at 05:15 PM																	
05:15 PM	**28**	49	26	103	21	271	40	332	**32**	45	29	106	18	**287**	27	**332**	**873**
05:30 PM	16	47	29	92	35	265	33	333	23	31	29	83	16	224	18	258	766
05:45 PM	24	22	28	74	**49**	291	32	372	20	33	**34**	87	**22**	211	22	255	788
06:00 PM	20	**52**	**32**	**104**	25	**310**	**42**	**377**	19	**64**	34	**117**	13	215	**29**	257	855
Total Volume	88	170	115	373	130	1137	147	1414	94	173	126	393	69	937	96	1102	3282
% App. Total	23.6	45.6	30.8		9.2	80.4	10.4		23.9	44	32.1		6.3	85	8.7		
PHF	.786	.817	.898	.897	.663	.917	.875	.938	.734	.676	.926	.840	.784	.816	.828	.830	.940

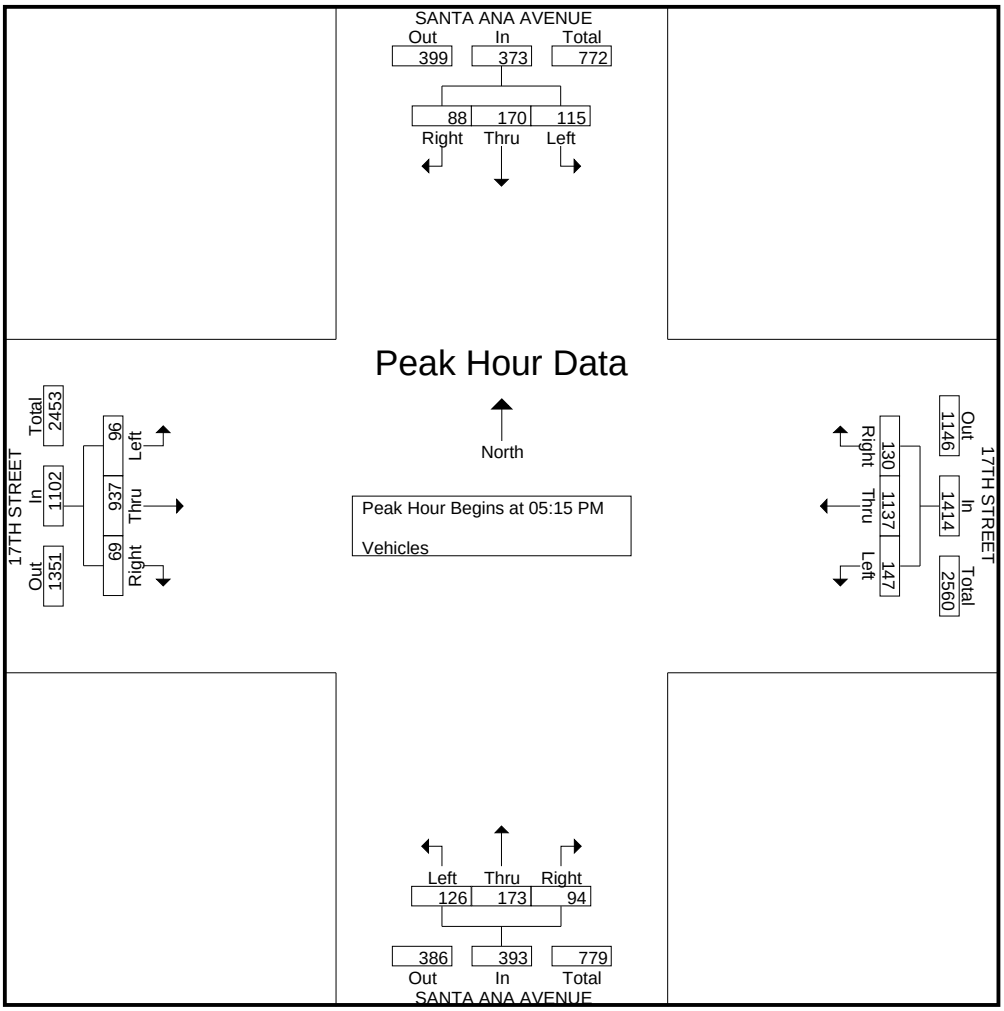

Transportation Studies, Inc.

2860 Walnut Avenue, Suite C
Tustin, CA. 92780

City: COSTA MESA
N-S Direction: TUSTIN AVENUE
E-W Direction: 17TH STREET

File Name : H0906050
Site Code : 00005055
Start Date : 6/18/2009
Page No : 1

Groups Printed- Vehicles

	TUSTIN AVENUE Southbound			17TH STREET Westbound			TUSTIN AVENUE Northbound			17TH STREET Eastbound			
Start Time	Right	Thru	Left	Right	Thru	Left	Right	Thru	Left	Right	Thru	Left	Int. Total
Factor	1.0	1.0	1.0	1.0	1.0	1.0	1.0	1.0	1.0	1.0	1.0	1.0	
07:00 AM	4	5	9	0	80	5	7	4	6	9	123	4	256
07:15 AM	7	10	7	6	111	3	7	13	8	16	123	3	314
07:30 AM	8	19	6	6	135	10	10	22	25	27	190	6	464
07:45 AM	6	43	6	8	161	13	27	44	36	39	234	4	621
Total	25	77	28	20	487	31	51	83	75	91	670	17	1655
08:00 AM	4	30	13	5	176	8	20	51	28	15	172	10	532
08:15 AM	11	10	16	12	179	8	21	26	18	18	210	8	537
08:30 AM	18	11	13	9	216	11	12	18	12	19	191	14	544
08:45 AM	8	16	13	8	192	13	6	25	22	13	179	9	504
Total	41	67	55	34	763	40	59	120	80	65	752	41	2117
*** BREAK ***													
04:30 PM	12	28	24	16	274	16	18	21	23	14	239	18	703
04:45 PM	6	21	17	12	261	21	20	28	29	19	251	22	707
Total	18	49	41	28	535	37	38	49	52	33	490	40	1410
05:00 PM	16	23	21	23	278	23	18	19	30	17	259	16	743
05:15 PM	13	33	14	18	306	19	22	29	28	11	284	12	789
05:30 PM	15	21	27	19	319	15	15	26	14	16	247	14	748
05:45 PM	18	24	19	20	291	16	18	45	34	14	246	10	755
Total	62	101	81	80	1194	73	73	119	106	58	1036	52	3035
06:00 PM	10	33	17	25	327	26	28	57	48	21	219	10	821
06:15 PM	13	31	21	21	325	21	22	49	43	19	206	17	788
Grand Total	169	358	243	208	3631	228	271	477	404	287	3373	177	9826
Apprch %	21.9	46.5	31.6	5.1	89.3	5.6	23.5	41.4	35.1	7.5	87.9	4.6	
Total %	1.7	3.6	2.5	2.1	37	2.3	2.8	4.9	4.1	2.9	34.3	1.8	

Transportation Studies, Inc.

2860 Walnut Avenue, Suite C
Tustin, CA. 92780

File Name : H0906050
Site Code : 00005055
Start Date : 6/18/2009
Page No : 2

	TUSTIN AVENUE Southbound				17TH STREET Westbound				TUSTIN AVENUE Northbound				17TH STREET Eastbound				
Start Time	Right	Thru	Left	App. Total	Right	Thru	Left	App. Total	Right	Thru	Left	App. Total	Right	Thru	Left	App. Total	Int. Total
Peak Hour Analysis From 07:00 AM to 08:45 AM - Peak 1 of 1																	
Peak Hour for Entire Intersection Begins at 07:45 AM																	
07:45 AM	6	**43**	6	**55**	8	161	**13**	182	**27**	44	**36**	**107**	**39**	**234**	4	**277**	**621**
08:00 AM	4	30	13	47	5	176	8	189	20	**51**	28	99	15	172	10	197	532
08:15 AM	11	10	**16**	37	**12**	179	8	199	21	26	18	65	18	210	8	236	537
08:30 AM	**18**	11	13	42	9	**216**	11	**236**	12	18	12	42	19	191	**14**	224	544
Total Volume	39	94	48	181	34	732	40	806	80	139	94	313	91	807	36	934	2234
% App. Total	21.5	51.9	26.5		4.2	90.8	5		25.6	44.4	30		9.7	86.4	3.9		
PHF	.542	.547	.750	.823	.708	.847	.769	.854	.741	.681	.653	.731	.583	.862	.643	.843	.899

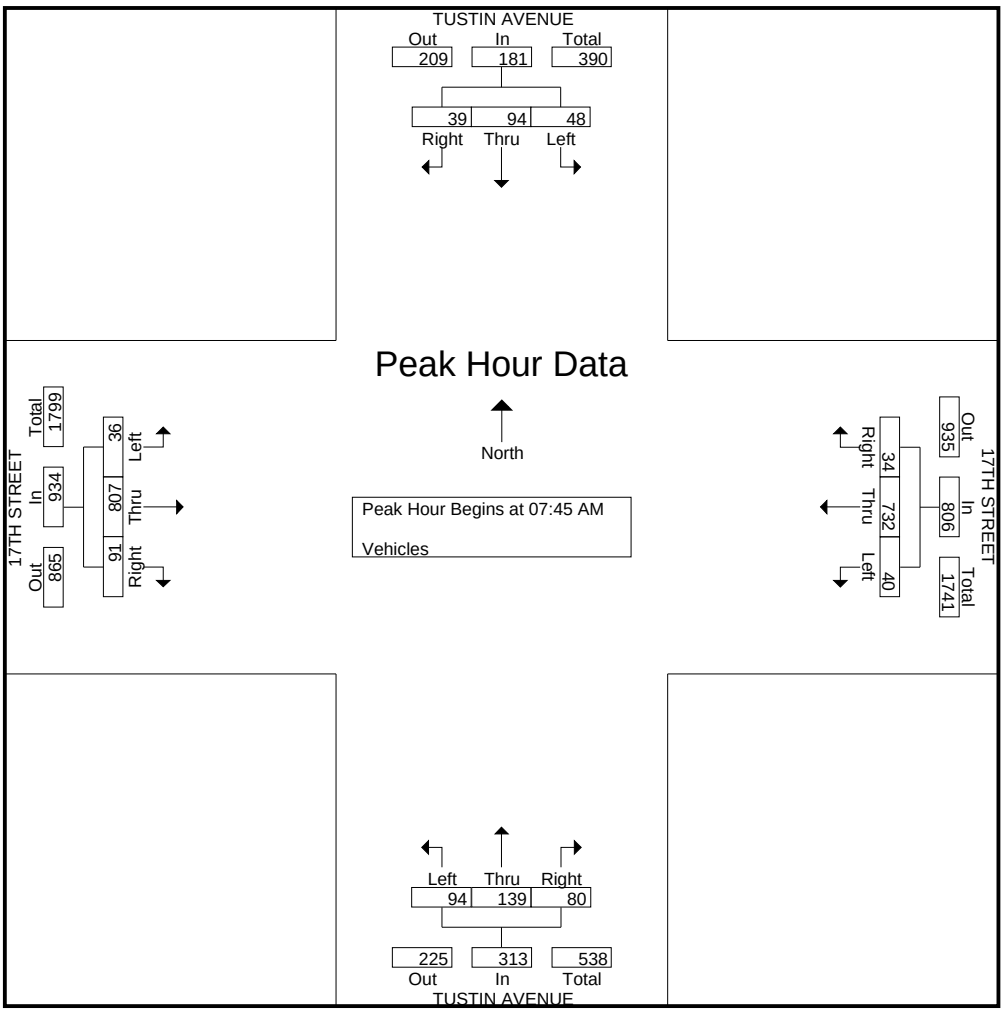

Transportation Studies, Inc.

2860 Walnut Avenue, Suite C
Tustin, CA. 92780

File Name : H0906050
Site Code : 00005055
Start Date : 6/18/2009
Page No : 3

	TUSTIN AVENUE Southbound				17TH STREET Westbound				TUSTIN AVENUE Northbound				17TH STREET Eastbound				
Start Time	Right	Thru	Left	App. Total	Right	Thru	Left	App. Total	Right	Thru	Left	App. Total	Right	Thru	Left	App. Total	Int. Total
Peak Hour Analysis From 04:30 PM to 06:15 PM - Peak 1 of 1																	
Peak Hour for Entire Intersection Begins at 05:15 PM																	
05:15 PM	13	**33**	14	60	18	306	19	343	22	29	28	79	11	**284**	12	**307**	789
05:30 PM	15	21	**27**	**63**	19	319	15	353	15	26	14	55	16	247	**14**	277	748
05:45 PM	**18**	24	19	61	20	291	16	327	18	45	34	97	14	246	10	270	755
06:00 PM	10	33	17	60	**25**	**327**	**26**	**378**	**28**	**57**	**48**	**133**	**21**	219	10	250	**821**
Total Volume	56	111	77	244	82	1243	76	1401	83	157	124	364	62	996	46	1104	3113
% App. Total	23	45.5	31.6		5.9	88.7	5.4		22.8	43.1	34.1		5.6	90.2	4.2		
PHF	.778	.841	.713	.968	.820	.950	.731	.927	.741	.689	.646	.684	.738	.877	.821	.899	.948

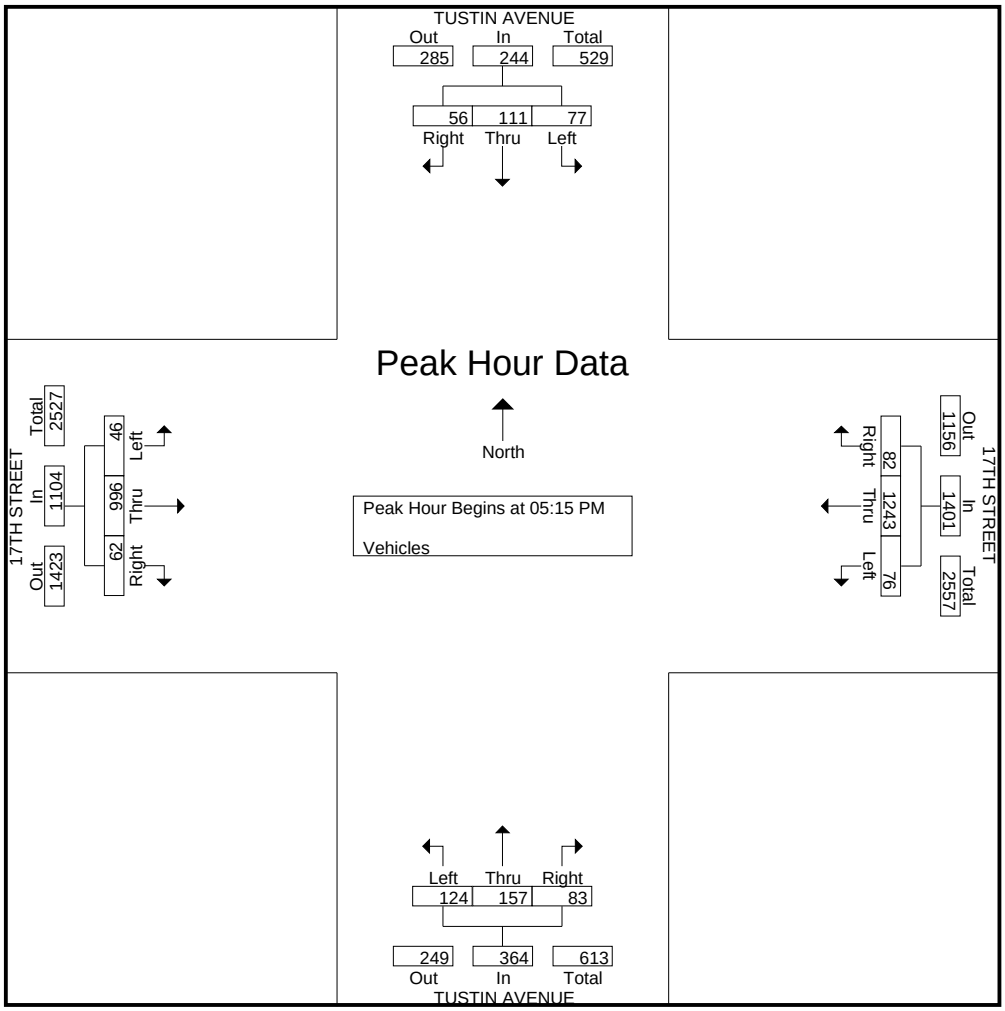

Transportation Studies, Inc.

2860 Walnut Avenue, Suite C
Tustin, CA. 92780

City: COSTA MESA
N-S Direction: IRVINE AVENUE
E-W Direction: 17TH STREET

File Name : H0906051
Site Code : 00003871
Start Date : 6/18/2009
Page No : 1

Groups Printed- Vehicles

	IRVINE AVENUE Southbound			17TH STREET Westbound			IRVINE AVENUE Northbound			17TH STREET Eastbound			
Start Time	Right	Thru	Left	Right	Thru	Left	Right	Thru	Left	Right	Thru	Left	Int. Total
Factor	1.0	1.0	1.0	1.0	1.0	1.0	1.0	1.0	1.0	1.0	1.0	1.0	
07:00 AM	18	55	24	6	35	7	2	43	33	26	84	20	353
07:15 AM	16	35	41	7	51	8	6	92	52	29	100	27	464
07:30 AM	33	125	51	6	55	12	9	134	55	51	105	39	675
07:45 AM	28	188	78	10	73	5	8	181	76	86	123	58	914
Total	95	403	194	29	214	32	25	450	216	192	412	144	2406
08:00 AM	34	97	39	16	74	9	11	173	81	35	138	56	763
08:15 AM	32	48	35	8	97	7	7	102	62	45	123	56	622
08:30 AM	50	70	36	14	117	14	5	86	63	37	112	53	657
08:45 AM	34	79	46	8	120	12	11	104	51	27	106	38	636
Total	150	294	156	46	408	42	34	465	257	144	479	203	2678
*** BREAK ***													
04:30 PM	44	123	35	16	159	25	11	93	40	42	140	60	788
04:45 PM	62	98	34	12	152	25	9	86	58	55	157	76	824
Total	106	221	69	28	311	50	20	179	98	97	297	136	1612
05:00 PM	72	108	44	21	144	28	9	101	77	43	161	66	874
05:15 PM	78	133	30	14	197	18	10	120	46	53	180	82	961
05:30 PM	93	136	44	12	156	21	13	121	73	45	154	56	924
05:45 PM	92	134	46	18	142	18	18	143	90	48	161	49	959
Total	335	511	164	65	639	85	50	485	286	189	656	253	3718
06:00 PM	76	121	33	14	168	30	8	184	112	54	132	62	994
06:15 PM	73	137	45	17	180	32	10	175	98	53	123	66	1009
Grand Total	835	1687	661	199	1920	271	147	1938	1067	729	2099	864	12417
Apprch %	26.2	53	20.8	8.3	80.3	11.3	4.7	61.5	33.9	19.7	56.9	23.4	
Total %	6.7	13.6	5.3	1.6	15.5	2.2	1.2	15.6	8.6	5.9	16.9	7	

Transportation Studies, Inc.

2860 Walnut Avenue, Suite C
Tustin, CA. 92780

File Name : H0906051
Site Code : 00003871
Start Date : 6/18/2009
Page No : 2

	IRVINE AVENUE Southbound				17TH STREET Westbound				IRVINE AVENUE Northbound				17TH STREET Eastbound				
Start Time	Right	Thru	Left	App. Total	Right	Thru	Left	App. Total	Right	Thru	Left	App. Total	Right	Thru	Left	App. Total	Int. Total
Peak Hour Analysis From 07:00 AM to 08:45 AM - Peak 1 of 1																	
Peak Hour for Entire Intersection Begins at 07:30 AM																	
07:30 AM	33	125	51	209	6	55	**12**	73	9	134	55	198	51	105	39	195	675
07:45 AM	28	**188**	**78**	**294**	10	73	5	88	8	**181**	76	**265**	**86**	123	**58**	**267**	**914**
08:00 AM	**34**	97	39	170	**16**	74	9	99	**11**	173	**81**	265	35	**138**	56	229	763
08:15 AM	32	48	35	115	8	**97**	7	**112**	7	102	62	171	45	123	56	224	622
Total Volume	127	458	203	788	40	299	33	372	35	590	274	899	217	489	209	915	2974
% App. Total	16.1	58.1	25.8		10.8	80.4	8.9		3.9	65.6	30.5		23.7	53.4	22.8		
PHF	.934	.609	.651	.670	.625	.771	.688	.830	.795	.815	.846	.848	.631	.886	.901	.857	.813

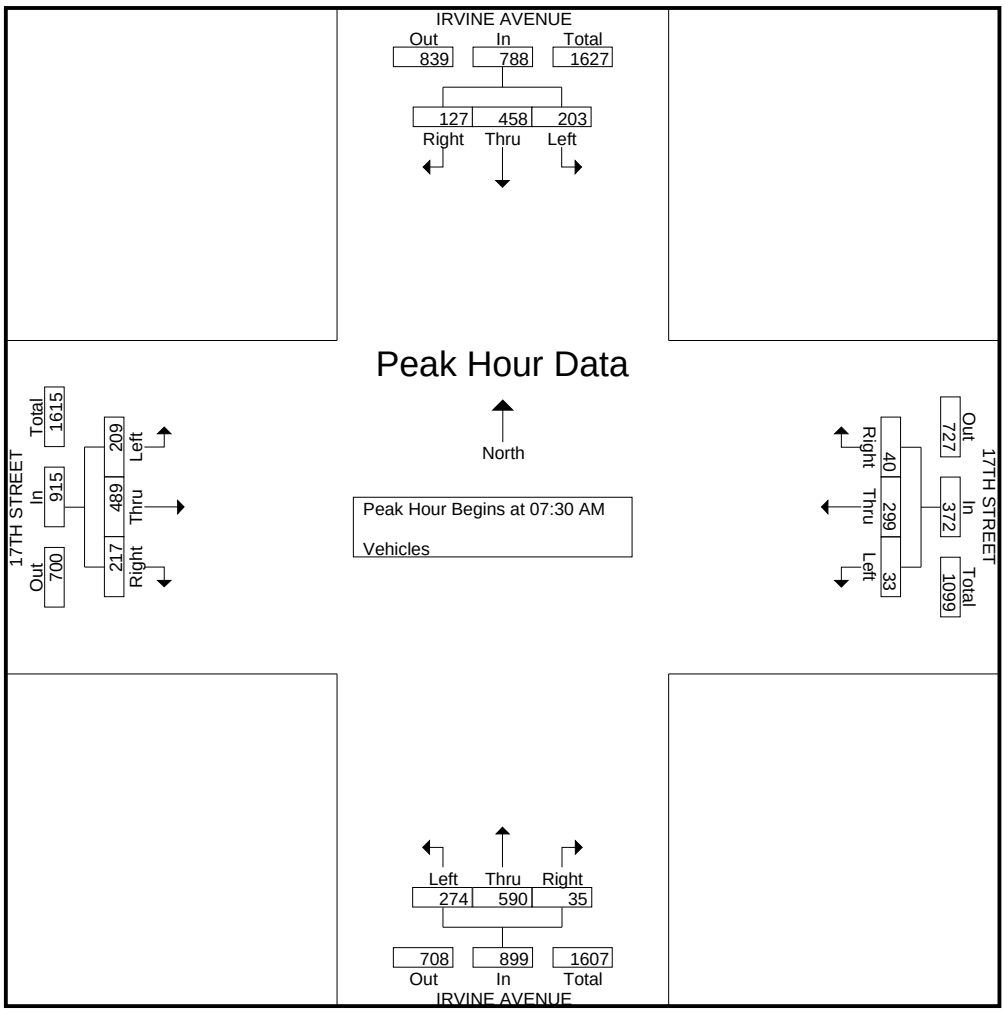

Transportation Studies, Inc.

2860 Walnut Avenue, Suite C
Tustin, CA. 92780

File Name : H0906051
Site Code : 00003871
Start Date : 6/18/2009
Page No : 3

	IRVINE AVENUE Southbound				17TH STREET Westbound				IRVINE AVENUE Northbound				17TH STREET Eastbound				
Start Time	Right	Thru	Left	App. Total	Right	Thru	Left	App. Total	Right	Thru	Left	App. Total	Right	Thru	Left	App. Total	Int. Total
Peak Hour Analysis From 04:30 PM to 06:15 PM - Peak 1 of 1																	
Peak Hour for Entire Intersection Begins at 05:30 PM																	
05:30 PM	**93**	136	44	**273**	12	156	21	189	13	121	73	207	45	154	56	255	924
05:45 PM	92	134	**46**	272	**18**	142	18	178	**18**	143	90	251	48	**161**	49	**258**	959
06:00 PM	76	121	33	230	14	168	30	212	8	**184**	**112**	**304**	**54**	132	62	248	994
06:15 PM	73	**137**	45	255	17	**180**	**32**	**229**	10	175	98	283	53	123	**66**	242	**1009**
Total Volume	334	528	168	1030	61	646	101	808	49	623	373	1045	200	570	233	1003	3886
% App. Total	32.4	51.3	16.3		7.5	80	12.5		4.7	59.6	35.7		19.9	56.8	23.2		
PHF	.898	.964	.913	.943	.847	.897	.789	.882	.681	.846	.833	.859	.926	.885	.883	.972	.963

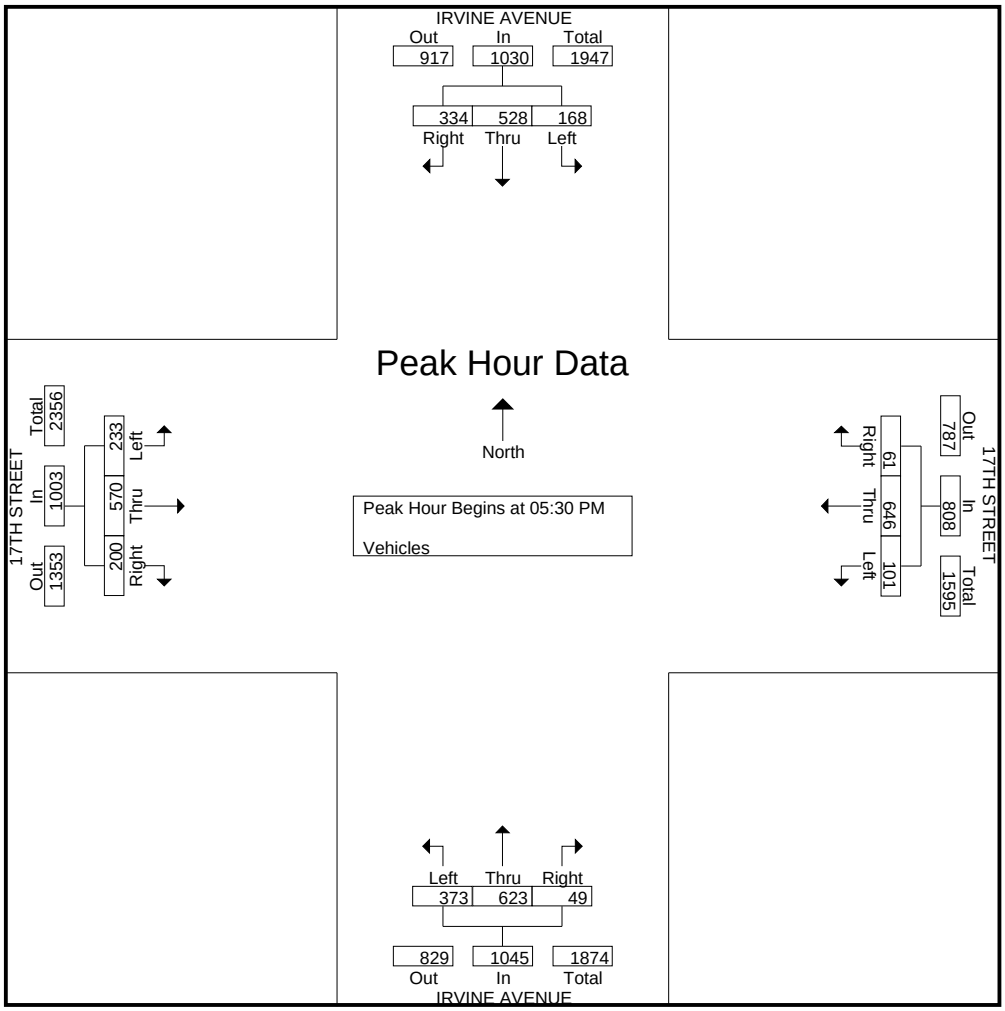

Transportation Studies, Inc.

2860 Walnut Avenue, Suite C
Tustin, CA. 92780

City: COSTA MESA
N-S Direction: PLACENTIA AVENUE
E-W Direction: 16TH STREET

File Name : H0905013
Site Code : 00000000
Start Date : 5/6/2009
Page No : 1

Groups Printed- VEHICLES

	PLACENTIA AVENUE Southbound			16TH STREET Westbound			PLACENTIA AVENUE Northbound			16TH STREET Eastbound			
Start Time	Right	Thru	Left	Right	Thru	Left	Right	Thru	Left	Right	Thru	Left	Int. Total
Factor	1.0	1.0	1.0	1.0	1.0	1.0	1.0	1.0	1.0	1.0	1.0	1.0	
07:00 AM	14	75	10	11	8	3	5	69	14	12	3	3	227
07:15 AM	11	90	16	3	10	2	4	63	6	4	7	2	218
07:30 AM	10	88	14	11	33	5	14	104	17	6	11	6	319
07:45 AM	23	111	26	10	42	8	16	123	14	8	27	4	412
Total	58	364	66	35	93	18	39	359	51	30	48	15	1176
08:00 AM	23	115	16	12	18	4	7	121	18	11	14	7	366
08:15 AM	23	107	11	7	20	2	9	106	24	7	4	6	326
08:30 AM	19	109	17	6	25	3	4	104	20	5	12	9	333
08:45 AM	20	108	13	9	19	5	6	100	23	10	13	5	331
Total	85	439	57	34	82	14	26	431	85	33	43	27	1356
*** BREAK ***													
04:30 PM	4	99	6	12	4	7	8	125	10	15	12	31	333
04:45 PM	3	111	4	16	11	3	7	120	9	11	7	17	319
Total	7	210	10	28	15	10	15	245	19	26	19	48	652
05:00 PM	9	79	3	27	8	7	7	145	12	12	15	20	344
05:15 PM	4	89	8	13	6	4	3	135	7	16	6	14	305
05:30 PM	4	102	6	26	3	7	5	130	6	20	14	13	336
05:45 PM	3	95	10	9	11	6	2	109	5	12	9	9	280
Total	20	365	27	75	28	24	17	519	30	60	44	56	1265
06:00 PM	2	88	6	9	2	4	3	107	3	11	6	11	252
06:15 PM	1	81	7	4	3	1	3	84	2	7	5	6	204
Grand Total	173	1547	173	185	223	71	103	1745	190	167	165	163	4905
Apprch %	9.1	81.7	9.1	38.6	46.6	14.8	5.1	85.6	9.3	33.7	33.3	32.9	
Total %	3.5	31.5	3.5	3.8	4.5	1.4	2.1	35.6	3.9	3.4	3.4	3.3	

Transportation Studies, Inc.

2860 Walnut Avenue, Suite C
Tustin, CA. 92780

File Name : H0905013
Site Code : 00000000
Start Date : 5/6/2009
Page No : 2

	PLACENTIA AVENUE Southbound				16TH STREET Westbound				PLACENTIA AVENUE Northbound				16TH STREET Eastbound				
Start Time	Right	Thru	Left	App. Total	Right	Thru	Left	App. Total	Right	Thru	Left	App. Total	Right	Thru	Left	App. Total	Int. Total
Peak Hour Analysis From 07:00 AM to 08:45 AM - Peak 1 of 1																	
Peak Hour for Entire Intersection Begins at 07:45 AM																	
07:45 AM	**23**	111	**26**	**160**	10	**42**	**8**	**60**	**16**	**123**	14	**153**	8	**27**	4	**39**	**412**
08:00 AM	23	**115**	16	154	**12**	18	4	34	7	121	18	146	**11**	14	7	32	366
08:15 AM	23	107	11	141	7	20	2	29	9	106	**24**	139	7	4	6	17	326
08:30 AM	19	109	17	145	6	25	3	34	4	104	20	128	5	12	**9**	26	333
Total Volume	88	442	70	600	35	105	17	157	36	454	76	566	31	57	26	114	1437
% App. Total	14.7	73.7	11.7		22.3	66.9	10.8		6.4	80.2	13.4		27.2	50	22.8		
PHF	.957	.961	.673	.938	.729	.625	.531	.654	.563	.923	.792	.925	.705	.528	.722	.731	.872

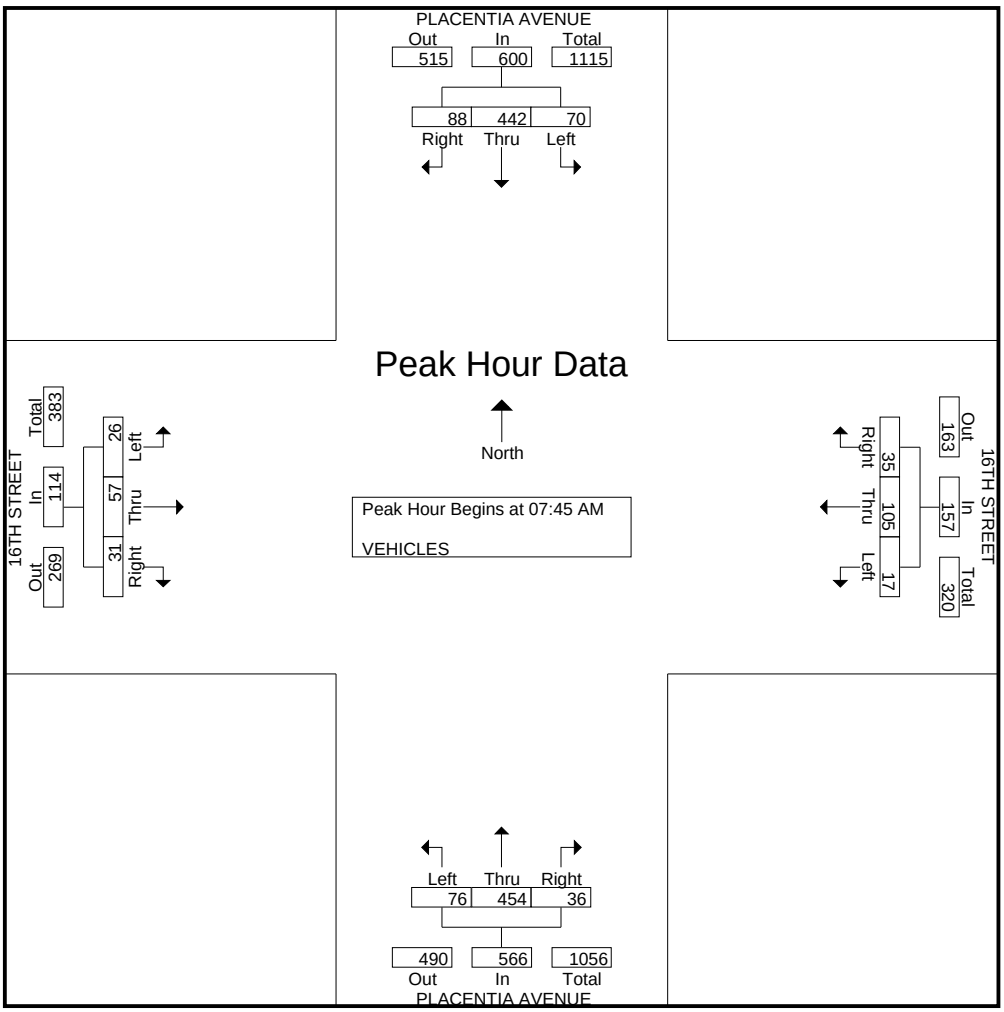

Transportation Studies, Inc.

2860 Walnut Avenue, Suite C
Tustin, CA. 92780

File Name : H0905013
Site Code : 00000000
Start Date : 5/6/2009
Page No : 3

	PLACENTIA AVENUE Southbound				16TH STREET Westbound				PLACENTIA AVENUE Northbound				16TH STREET Eastbound				
Start Time	Right	Thru	Left	App. Total	Right	Thru	Left	App. Total	Right	Thru	Left	App. Total	Right	Thru	Left	App. Total	Int. Total
Peak Hour Analysis From 04:30 PM to 06:15 PM - Peak 1 of 1																	
Peak Hour for Entire Intersection Begins at 04:45 PM																	
04:45 PM	3	**111**	4	**118**	16	**11**	3	30	**7**	120	9	136	11	7	17	35	319
05:00 PM	**9**	79	3	91	**27**	8	**7**	**42**	7	**145**	**12**	**164**	12	**15**	**20**	**47**	**344**
05:15 PM	4	89	**8**	101	13	6	4	23	3	135	7	145	16	6	14	36	305
05:30 PM	4	102	6	112	26	3	7	36	5	130	6	141	**20**	14	13	47	336
Total Volume	20	381	21	422	82	28	21	131	22	530	34	586	59	42	64	165	1304
% App. Total	4.7	90.3	5		62.6	21.4	16		3.8	90.4	5.8		35.8	25.5	38.8		
PHF	.556	.858	.656	.894	.759	.636	.750	.780	.786	.914	.708	.893	.738	.700	.800	.878	.948

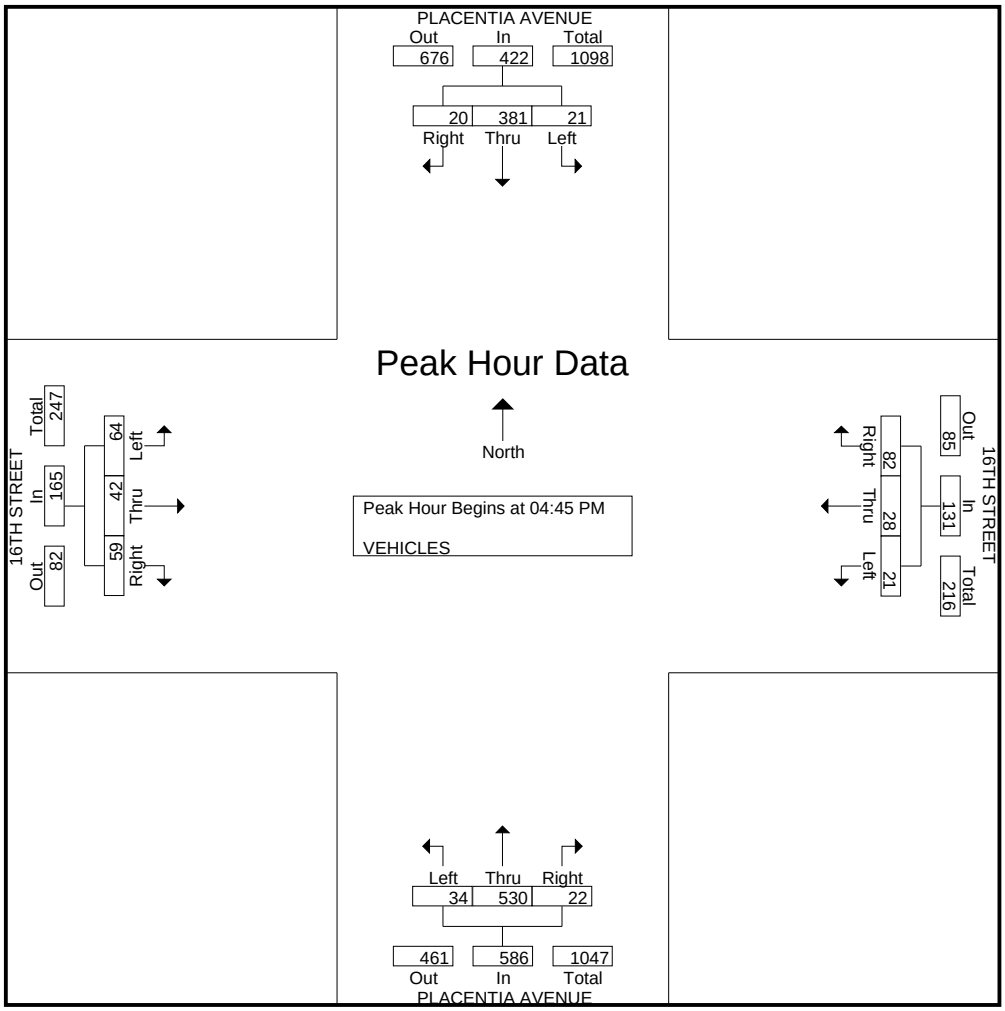

Transportation Studies, Inc.

2860 Walnut Avenue, Suite C
Tustin, CA. 92780

City: COSTA MESA
N-S Direction: SUPERIOR AVENUE
E-W Direction: 16TH STREET

File Name : H0905018
Site Code : 00005059
Start Date : 5/5/2009
Page No : 1

Groups Printed- Vehicles

	SUPERIOR AVENUE Southbound			16TH STREET Westbound			SUPERIOR AVENUE Northbound			16TH STREET Eastbound			
Start Time	Right	Thru	Left	Right	Thru	Left	Right	Thru	Left	Right	Thru	Left	Int. Total
Factor	1.0	1.0	1.0	1.0	1.0	1.0	1.0	1.0	1.0	1.0	1.0	1.0	
07:00 AM	18	101	6	5	10	7	9	149	7	0	23	8	343
07:15 AM	14	94	11	4	31	7	8	154	8	0	25	11	367
07:30 AM	26	114	7	4	37	7	13	219	7	0	44	5	483
07:45 AM	25	125	9	5	42	9	15	234	6	0	50	7	527
Total	83	434	33	18	120	30	45	756	28	0	142	31	1720
08:00 AM	30	125	9	5	41	2	16	232	8	0	48	4	520
08:15 AM	33	143	10	3	37	2	18	252	5	0	41	7	551
08:30 AM	31	131	11	3	36	5	19	237	6	0	40	5	524
08:45 AM	36	141	11	4	39	6	13	246	6	0	44	7	553
Total	130	540	41	15	153	15	66	967	25	0	173	23	2148
*** BREAK ***													
04:30 PM	11	194	5	4	20	5	5	164	11	0	22	10	451
04:45 PM	6	186	6	2	18	1	5	153	3	2	25	5	412
Total	17	380	11	6	38	6	10	317	14	2	47	15	863
05:00 PM	13	203	7	6	23	4	7	171	5	0	21	7	467
05:15 PM	7	218	5	3	21	3	7	178	4	0	24	9	479
05:30 PM	13	227	6	3	19	6	6	168	8	1	23	8	488
05:45 PM	10	216	7	2	24	3	3	182	6	0	26	6	485
Total	43	864	25	14	87	16	23	699	23	1	94	30	1919
06:00 PM	11	192	5	3	20	5	8	161	7	0	22	7	441
06:15 PM	8	187	5	2	17	5	6	148	3	0	19	6	406
Grand Total	292	2597	120	58	435	77	158	3048	100	3	497	112	7497
Apprch %	9.7	86.3	4	10.2	76.3	13.5	4.8	92.2	3	0.5	81.2	18.3	
Total %	3.9	34.6	1.6	0.8	5.8	1	2.1	40.7	1.3	0	6.6	1.5	

Transportation Studies, Inc.

2860 Walnut Avenue, Suite C
Tustin, CA. 92780

File Name : H0905018
Site Code : 00005059
Start Date : 5/5/2009
Page No : 2

	SUPERIOR AVENUE Southbound				16TH STREET Westbound				SUPERIOR AVENUE Northbound				16TH STREET Eastbound				
Start Time	Right	Thru	Left	App. Total	Right	Thru	Left	App. Total	Right	Thru	Left	App. Total	Right	Thru	Left	App. Total	Int. Total
Peak Hour Analysis From 07:00 AM to 08:45 AM - Peak 1 of 1																	
Peak Hour for Entire Intersection Begins at 08:00 AM																	
08:00 AM	30	125	9	164	**5**	**41**	2	48	16	232	**8**	256	0	**48**	4	**52**	520
08:15 AM	33	**143**	10	186	3	37	2	42	18	**252**	5	**275**	0	41	**7**	48	551
08:30 AM	31	131	**11**	173	3	36	5	44	**19**	237	6	262	0	40	5	45	524
08:45 AM	**36**	141	11	**188**	4	39	**6**	**49**	13	246	6	265	0	44	7	51	**553**
Total Volume	130	540	41	711	15	153	15	183	66	967	25	1058	0	173	23	196	2148
% App. Total	18.3	75.9	5.8		8.2	83.6	8.2		6.2	91.4	2.4		0	88.3	11.7		
PHF	.903	.944	.932	.945	.750	.933	.625	.934	.868	.959	.781	.962	.000	.901	.821	.942	.971

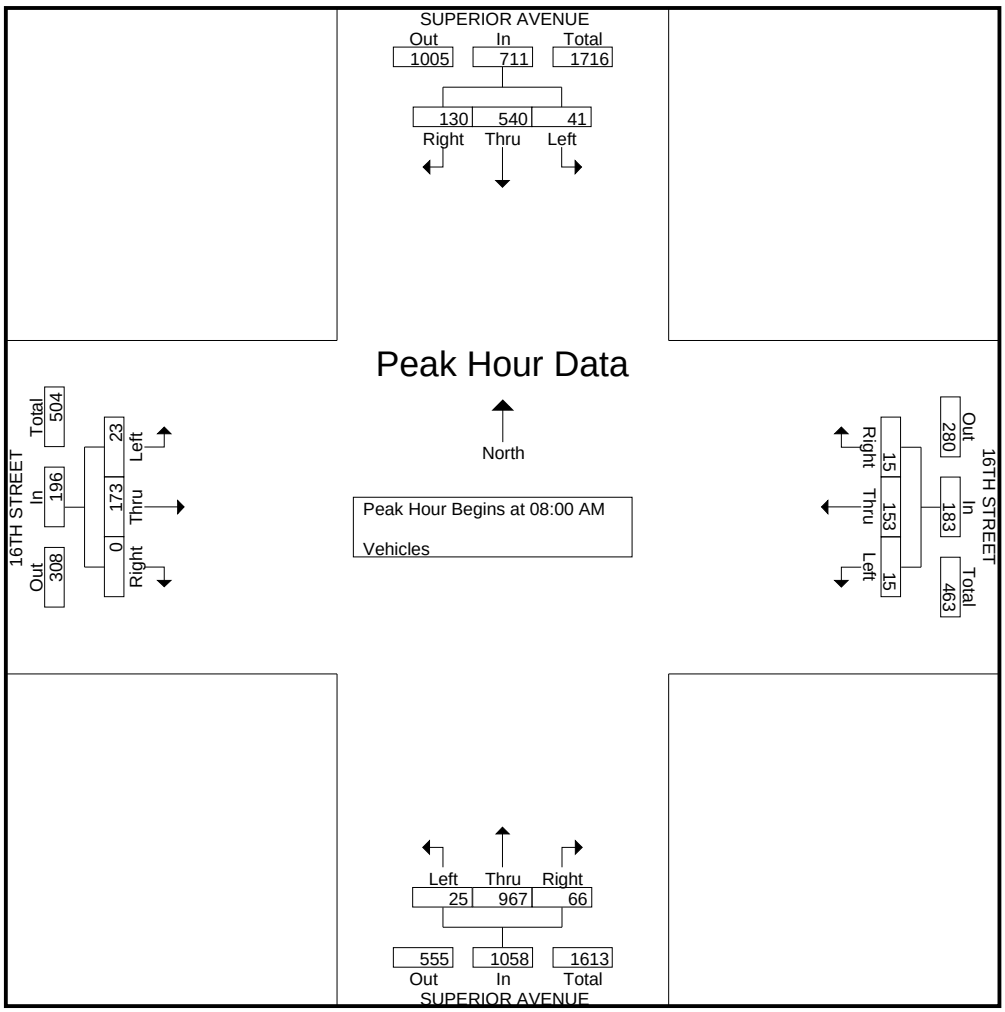

Transportation Studies, Inc.

2860 Walnut Avenue, Suite C
Tustin, CA. 92780

File Name : H0905018
Site Code : 00005059
Start Date : 5/5/2009
Page No : 3

	SUPERIOR AVENUE Southbound				16TH STREET Westbound				SUPERIOR AVENUE Northbound				16TH STREET Eastbound				
Start Time	Right	Thru	Left	App. Total	Right	Thru	Left	App. Total	Right	Thru	Left	App. Total	Right	Thru	Left	App. Total	Int. Total
Peak Hour Analysis From 04:30 PM to 06:15 PM - Peak 1 of 1																	
Peak Hour for Entire Intersection Begins at 05:00 PM																	
05:00 PM	**13**	203	**7**	223	**6**	23	4	**33**	**7**	171	5	183	0	21	7	28	467
05:15 PM	7	218	5	230	3	21	3	27	7	178	4	189	0	24	**9**	**33**	479
05:30 PM	13	**227**	6	**246**	3	19	**6**	28	6	168	**8**	182	**1**	23	8	32	**488**
05:45 PM	10	216	7	233	2	**24**	3	29	3	**182**	6	**191**	0	**26**	6	32	485
Total Volume	43	864	25	932	14	87	16	117	23	699	23	745	1	94	30	125	1919
% App. Total	4.6	92.7	2.7		12	74.4	13.7		3.1	93.8	3.1		0.8	75.2	24		
PHF	.827	.952	.893	.947	.583	.906	.667	.886	.821	.960	.719	.975	.250	.904	.833	.947	.983

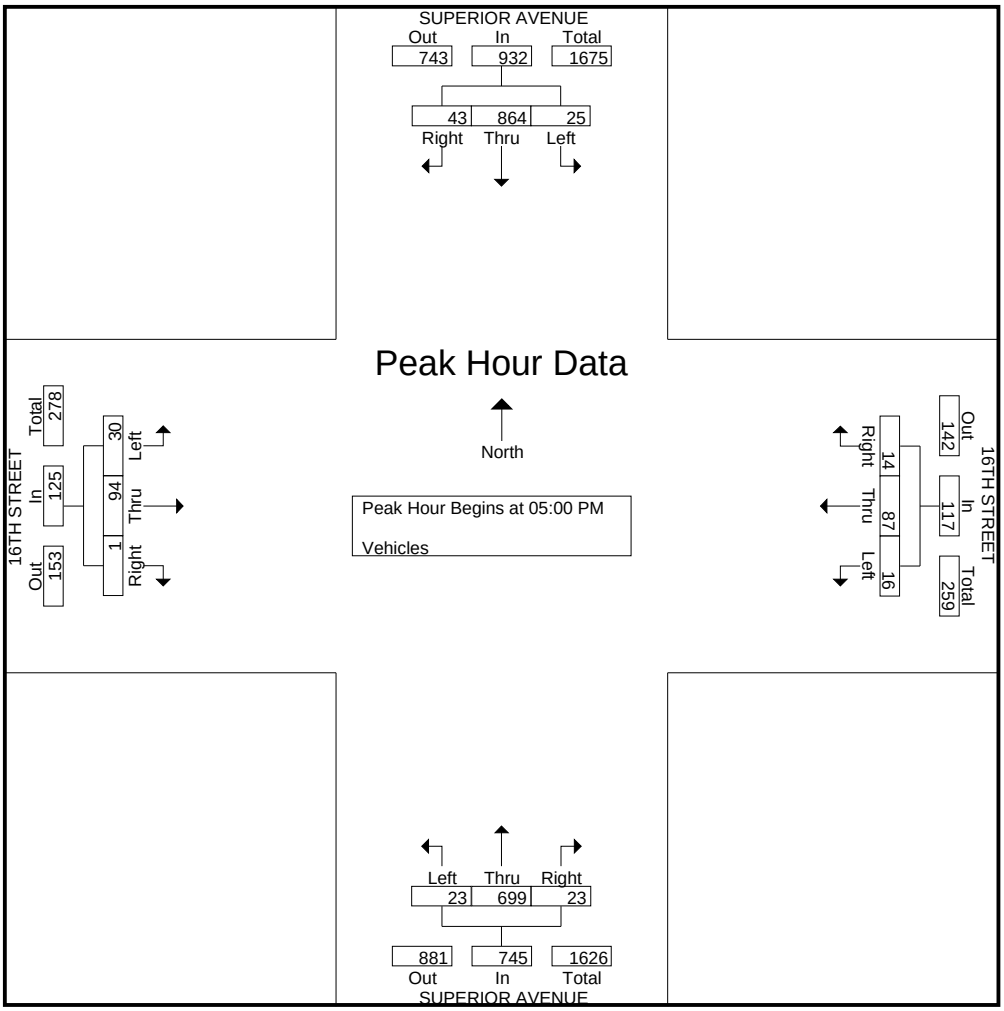

Transportation Studies, Inc.

2860 Walnut Avenue, Suite C
Tustin, CA. 92780

City: COSTA MESA
N-S Direction: NEWPORT BOULEVARD
E-W Direction: 16TH STREET

File Name : H0905021
Site Code : 00005054
Start Date : 5/5/2009
Page No : 1

Groups Printed- Vehicles

	NEWPORT BOULEVARD Southbound			16TH STREET Westbound			NEWPORT BOULEVARD Northbound			16TH STREET Eastbound			
Start Time	Right	Thru	Left	Right	Thru	Left	Right	Thru	Left	Right	Thru	Left	Int. Total
Factor	1.0	1.0	1.0	1.0	1.0	1.0	1.0	1.0	1.0	1.0	1.0	1.0	
07:00 AM	4	348	10	13	1	1	4	331	2	1	4	5	724
07:15 AM	12	322	7	8	8	3	6	380	1	0	3	3	753
07:30 AM	8	346	11	15	13	2	8	369	1	2	8	6	789
07:45 AM	11	331	15	18	19	5	12	385	3	3	10	9	821
Total	35	1347	43	54	41	11	30	1465	7	6	25	23	3087
08:00 AM	13	354	15	22	20	5	10	397	2	5	11	11	865
08:15 AM	14	336	18	19	16	4	12	374	2	3	12	11	821
08:30 AM	11	349	12	18	13	5	8	383	1	2	11	7	820
08:45 AM	10	322	15	14	11	2	6	365	2	1	8	7	763
Total	48	1361	60	73	60	16	36	1519	7	11	42	36	3269
*** BREAK ***													
04:30 PM	6	514	24	16	12	4	8	323	8	1	5	7	928
04:45 PM	9	481	21	15	12	4	12	348	8	8	10	4	932
Total	15	995	45	31	24	8	20	671	16	9	15	11	1860
05:00 PM	8	509	18	19	15	5	10	327	4	4	8	6	933
05:15 PM	8	526	26	16	8	3	11	344	7	5	13	8	975
05:30 PM	6	516	22	17	11	7	10	358	4	4	10	11	976
05:45 PM	9	531	20	12	9	5	13	365	5	6	13	9	997
Total	31	2082	86	64	43	20	44	1394	20	19	44	34	3881
06:00 PM	6	511	17	14	9	5	16	335	4	6	12	8	943
06:15 PM	5	485	19	15	13	8	16	323	3	9	9	8	913
Grand Total	140	6781	270	251	190	68	162	5707	57	60	147	120	13953
Apprch %	1.9	94.3	3.8	49.3	37.3	13.4	2.7	96.3	1	18.3	45	36.7	
Total %	1	48.6	1.9	1.8	1.4	0.5	1.2	40.9	0.4	0.4	1.1	0.9	

Transportation Studies, Inc.

2860 Walnut Avenue, Suite C
Tustin, CA. 92780

File Name : H0905021
Site Code : 00005054
Start Date : 5/5/2009
Page No : 2

	NEWPORT BOULEVARD Southbound				16TH STREET Westbound				NEWPORT BOULEVARD Northbound				16TH STREET Eastbound				
Start Time	Right	Thru	Left	App. Total	Right	Thru	Left	App. Total	Right	Thru	Left	App. Total	Right	Thru	Left	App. Total	Int. Total
Peak Hour Analysis From 07:00 AM to 08:45 AM - Peak 1 of 1																	
Peak Hour for Entire Intersection Begins at 07:45 AM																	
07:45 AM	11	331	15	357	18	19	**5**	42	**12**	385	**3**	400	3	10	9	22	821
08:00 AM	13	**354**	15	**382**	**22**	**20**	5	**47**	10	**397**	2	**409**	**5**	11	**11**	**27**	**865**
08:15 AM	**14**	336	**18**	368	19	16	4	39	12	374	2	388	3	**12**	11	26	821
08:30 AM	11	349	12	372	18	13	5	36	8	383	1	392	2	11	7	20	820
Total Volume	49	1370	60	1479	77	68	19	164	42	1539	8	1589	13	44	38	95	3327
% App. Total	3.3	92.6	4.1		47	41.5	11.6		2.6	96.9	0.5		13.7	46.3	40		
PHF	.875	.968	.833	.968	.875	.850	.950	.872	.875	.969	.667	.971	.650	.917	.864	.880	.962

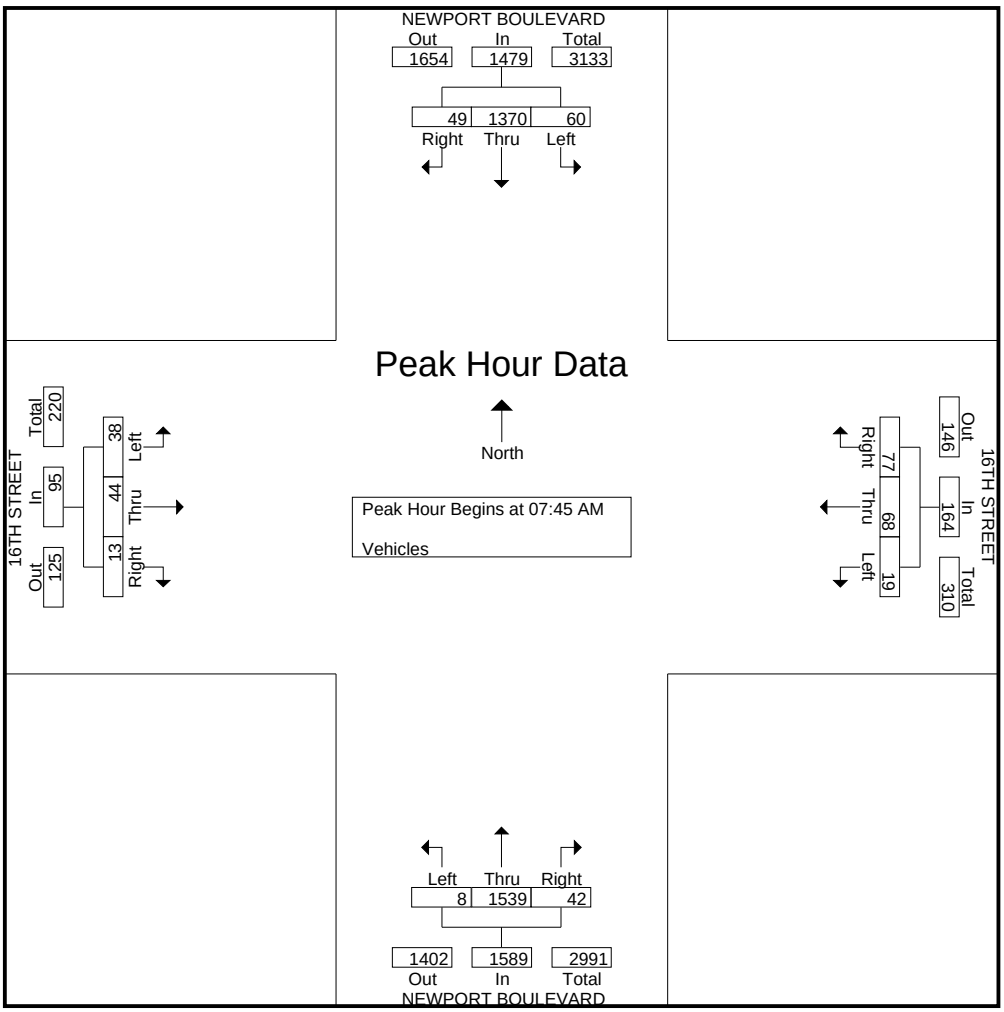

Transportation Studies, Inc.

2860 Walnut Avenue, Suite C
Tustin, CA. 92780

File Name : H0905021
Site Code : 00005054
Start Date : 5/5/2009
Page No : 3

	NEWPORT BOULEVARD Southbound				16TH STREET Westbound				NEWPORT BOULEVARD Northbound				16TH STREET Eastbound				
Start Time	Right	Thru	Left	App. Total	Right	Thru	Left	App. Total	Right	Thru	Left	App. Total	Right	Thru	Left	App. Total	Int. Total
Peak Hour Analysis From 04:30 PM to 06:15 PM - Peak 1 of 1																	
Peak Hour for Entire Intersection Begins at 05:15 PM																	
05:15 PM	8	526	**26**	**560**	16	8	3	27	11	344	**7**	362	5	**13**	8	26	975
05:30 PM	6	516	22	544	**17**	**11**	**7**	**35**	10	358	4	372	4	10	**11**	25	976
05:45 PM	**9**	**531**	20	560	12	9	5	26	13	**365**	5	**383**	**6**	13	9	**28**	**997**
06:00 PM	6	511	17	534	14	9	5	28	**16**	335	4	355	6	12	8	26	943
Total Volume	29	2084	85	2198	59	37	20	116	50	1402	20	1472	21	48	36	105	3891
% App. Total	1.3	94.8	3.9		50.9	31.9	17.2		3.4	95.2	1.4		20	45.7	34.3		
PHF	.806	.981	.817	.981	.868	.841	.714	.829	.781	.960	.714	.961	.875	.923	.818	.938	.976

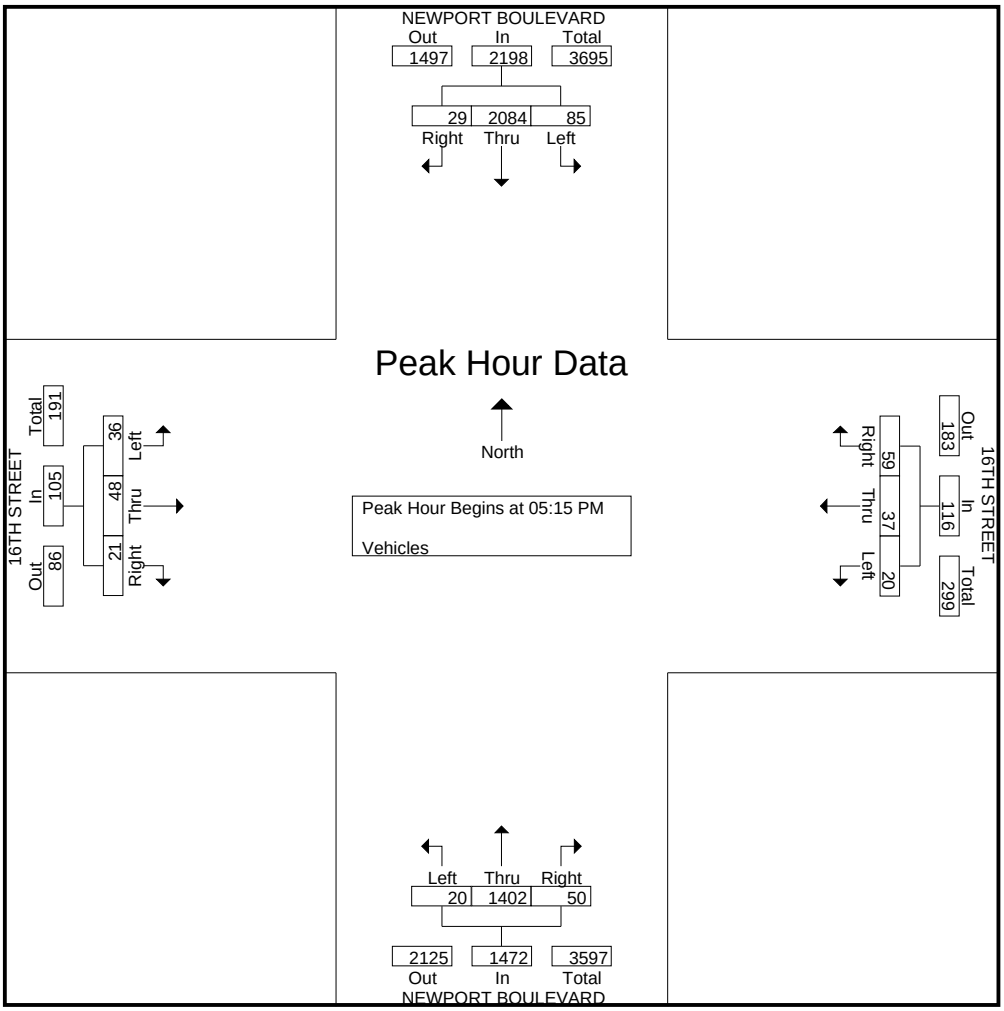

Intersection Turning Movement

Prepared by:

National Data & Surveying Services

Project ID: CA11_1054_001

Day: WEDNESDAY

City: City of Newport Beach

Date: 5/4/2011

AM

NS/EW Streets:	Monrovia St			Monrovia St			15th St			15th St			
	NORTHBOUND			SOUTHBOUND			EASTBOUND			WESTBOUND			
	NL	NT	NR	SL	ST	SR	EL	ET	ER	WL	WT	WR	TOTAL
LANES:	0	1	0	0	1	0	0	0	0	0	1	0	
7:00 AM		0	4	21	0	0	0			1	0	8	34
7:15 AM		1	3	17	0	0	0			1	0	11	33
7:30 AM		0	4	30	0	0	0			0	1	19	54
7:45 AM		0	2	40	1	0	0			0	0	26	69
8:00 AM		1	3	22	1	0	0			1	0	23	51
8:15 AM		5	2	21	1	1	1			4	1	14	50
8:30 AM		2	6	19	1	0	0			1	0	10	39
8:45 AM		2	2	9	0	0	0			1	4	13	31
	NL	NT	NR	SL	ST	SR	EL	ET	ER	WL	WT	WR	TOTAL
TOTAL VOLUMES :	0	11	26	179	4	1	1	0	0	9	6	124	361
APPROACH %'s :	0.00%	29.73%	70.27%	97.28%	2.17%	0.54%	100.00%	0.00%	0.00%	6.47%	4.32%	89.21%	
PEAK HR START TIME :	730 AM												TOTAL
PEAK HR VOL :	0	6	11	113	3	1	1	0	0	5	2	82	224
PEAK HR FACTOR :		0.607			0.713			0.250			0.856		0.812

CONTROL : 4-Way Stop

Intersection Turning Movement

Prepared by:

National Data & Surveying Services

Project ID: CA11_1054_001

Day: WEDNESDAY

City: City of Newport Beach

Date: 5/4/2011

PM

NS/EW Streets:	Monrovia St			Monrovia St			15th St			15th St			
	NORTHBOUND			SOUTHBOUND			EASTBOUND			WESTBOUND			
	NL	NT	NR	SL	ST	SR	EL	ET	ER	WL	WT	WR	TOTAL
LANES:	0	1	0	0	1	0	0	0	0	0	1	0	
4:00 PM		2	3	27	1	0	0	0		4	0	12	49
4:15 PM		0	2	23	2	0	1	0		1	0	14	43
4:30 PM		0	2	30	1	1	0	1		1	1	11	48
4:45 PM		2	4	22	3	0	2	1		1	0	6	41
5:00 PM		2	6	22	2	1	5	2		2	0	5	47
5:15 PM		1	1	16	0	0	2	4		3	0	13	40
5:30 PM		0	7	19	2	0	1	0		2	1	14	46
5:45 PM		2	3	35	1	0	1	1		4	1	10	58
	NL	NT	NR	SL	ST	SR	EL	ET	ER	WL	WT	WR	TOTAL
TOTAL VOLUMES :	0	9	28	194	12	2	12	9	0	18	3	85	372
APPROACH %'s :	0.00%	24.32%	75.68%	93.27%	5.77%	0.96%	57.14%	42.86%	0.00%	16.98%	2.83%	80.19%	
PEAK HR START TIME :	500 PM												TOTAL
PEAK HR VOL :	0	5	17	92	5	1	9	7	0	11	2	42	191
PEAK HR FACTOR :		0.688			0.681			0.571			0.809		0.823

CONTROL : 4-Way Stop

ITM Peak Hour Summary

Prepared by:

National Data & Surveying Services

Monrovia St and 15th St , City of Newport Beach

Date: 5/4/2011

Day: Wednesday

Project #: CA11_1054_001

Peak Hour Summary

Southbound Approach (Monrovia St)

Lanes	0	1	0		
AM	1	3	113	89	AM
NOON	0	0	0	0	NOON
PM	1	5	92	56	PM

Eastbound Approach (15th St)

Lanes	AM	NOON	PM
	3	0	3
0	1	0	9
0	0	0	7
0	0	0	0

Westbound Approach

AM	NOON	PM	Lanes
82	0	42	0
2	0	2	1
5	0	11	0
124	0	116	

Northbound Approach

AM	8	0	6	11	AM
NOON	0	0	0	0	NOON
PM	16	0	5	17	PM
		0	1	0	Lanes

CONTROL: 4-Way Stop

AM Peak Hour	730 AM
NOON Peak Hour	
PM Peak Hour	500 PM

Count Periods	Start	End
AM	7:00 AM	9:00 AM
NOON		
PM	4:00 PM	6:00 PM

Total Ins & Outs

	North Leg		East Leg			West Leg			South Leg	
AM	117	89	89	0	55	3	0	3	8	17
NOON	0	0	124	0	116	1	0	16	0	0
PM	98	56							16	22

Total Volume Per Leg

	North Leg	East Leg			West Leg			South Leg
AM	206	213	0	171	4	0	19	25
NOON	0							0
PM	154							38

APPENDIX B

INTERSECTION ANALYSIS WORKSHEETS – EXISTING CONDITIONS

Newport Banning Ranch
Existing Conditions - ICU
AM Peak Hour

Scenario Report

Scenario:	Existing AM ICU
Command:	Existing AM ICU
Volume:	Existing AM
Geometry:	Existing ICU
Impact Fee:	Default Impact Fee
Trip Generation:	None
Trip Distribution:	None
Paths:	None
Routes:	Default Route
Configuration:	ICU

Newport Banning Ranch
Existing Conditions - ICU
AM Peak Hour

Level Of Service Computation Report
2000 HCM 4-Way Stop Method (Future Volume Alternative)

Intersection #1 Monrovia Ave/16th St

Cycle (sec): 100 | Critical Vol./Cap.(X): 0.269
Loss Time (sec): 0 (Y+R=4.0 sec) | Average Delay (sec/veh): 8.8
Optimal Cycle: 0 | Level Of Service: A

Street Name:	Monrovia Avenue						16th Street					
Approach:	North Bound			South Bound			East Bound			West Bound		
Movement:	L -	T -	R	L -	T -	R	L -	T -	R	L -	T -	R
Control:	Stop Sign			Stop Sign			Stop Sign			Stop Sign		
Rights:	Include			Include			Include			Include		
Min. Green:	0	0	0	0	0	0	0	0	0	0	0	0
Lanes:	0 0	1! 0	0	0 0	1! 0	0	0 0	1! 0	0	0 0	1! 0	0
Volume Module:												
Base Vol:	4	92	54	35	104	19	9	20	10	112	44	44
Growth Adj:	1.00	1.00	1.00	1.00	1.00	1.00	1.00	1.00	1.00	1.00	1.00	1.00
Initial Bse:	4	92	54	35	104	19	9	20	10	112	44	44
Added Vol:	0	0	0	0	0	0	0	0	0	0	0	0
PasserByVol:	0	0	0	0	0	0	0	0	0	0	0	0
Initial Fut:	4	92	54	35	104	19	9	20	10	112	44	44
User Adj:	1.00	1.00	1.00	1.00	1.00	1.00	1.00	1.00	1.00	1.00	1.00	1.00
PHF Adj:	1.00	1.00	1.00	1.00	1.00	1.00	1.00	1.00	1.00	1.00	1.00	1.00
PHF Volume:	4	92	54	35	104	19	9	20	10	112	44	44
Reduct Vol:	0	0	0	0	0	0	0	0	0	0	0	0
Reduced Vol:	4	92	54	35	104	19	9	20	10	112	44	44
PCE Adj:	1.00	1.00	1.00	1.00	1.00	1.00	1.00	1.00	1.00	1.00	1.00	1.00
MLF Adj:	1.00	1.00	1.00	1.00	1.00	1.00	1.00	1.00	1.00	1.00	1.00	1.00
FinalVolume:	4	92	54	35	104	19	9	20	10	112	44	44
Saturation Flow Module:												
Adjustment:	1.00	1.00	1.00	1.00	1.00	1.00	1.00	1.00	1.00	1.00	1.00	1.00
Lanes:	0.03	0.61	0.36	0.22	0.66	0.12	0.23	0.51	0.26	0.56	0.22	0.22
Final Sat.:	21	475	279	166	492	90	164	364	182	417	164	164
Capacity Analysis Module:												
Vol/Sat:	0.19	0.19	0.19	0.21	0.21	0.21	0.06	0.06	0.06	0.27	0.27	0.27
Crit Moves:		****			****			****			****	
Delay/Veh:	8.4	8.4	8.4	8.8	8.8	8.8	8.0	8.0	8.0	9.2	9.2	9.2
Delay Adj:	1.00	1.00	1.00	1.00	1.00	1.00	1.00	1.00	1.00	1.00	1.00	1.00
AdjDel/Veh:	8.4	8.4	8.4	8.8	8.8	8.8	8.0	8.0	8.0	9.2	9.2	9.2
LOS by Move:	A	A	A	A	A	A	A	A	A	A	A	A
ApproachDel:	8.4			8.8			8.0			9.2		
Delay Adj:	1.00			1.00			1.00			1.00		
ApprAdjDel:	8.4			8.8			8.0			9.2		
LOS by Appr:	A			A			A			A		
AllWayAvgQ:	0.2	0.2	0.2	0.2	0.2	0.2	0.1	0.1	0.1	0.3	0.3	0.3

Newport Banning Ranch
Existing Conditions - ICU
AM Peak Hour

Note: Queue reported is the number of cars per lane.

Newport Banning Ranch
Existing Conditions - ICU
AM Peak Hour

Level Of Service Computation Report
ICU 1(Loss as Cycle Length %) Method (Future Volume Alternative)

Intersection #2 Placentia Ave/15th St

Cycle (sec):	100	Critical Vol./Cap.(X):	0.446
Loss Time (sec):	0 (Y+R=4.0 sec)	Average Delay (sec/veh):	xxxxxx
Optimal Cycle:	41	Level Of Service:	A

Street Name:	Placentia Ave						15th Street					
Approach:	North Bound			South Bound			East Bound			West Bound		
Movement:	L - T - R			L - T - R			L - T - R			L - T - R		
Control:	Prot+Permit			Prot+Permit			Split Phase			Split Phase		
Rights:	Include			Include			Include			Include		
Min. Green:	0	0	0	0	0	0	0	0	0	0	0	0
Lanes:	1 0 1	1 0		1 0 1	1 0		0 0 1!	0 0		0 1 0	0 1	
Volume Module:												
Base Vol:	131	425	15	25	431	19	57	51	174	4	22	75
Growth Adj:	1.00	1.00	1.00	1.00	1.00	1.00	1.00	1.00	1.00	1.00	1.00	1.00
Initial Bse:	131	425	15	25	431	19	57	51	174	4	22	75
Added Vol:	0	0	0	0	0	0	0	0	0	0	0	0
PasserByVol:	0	0	0	0	0	0	0	0	0	0	0	0
Initial Fut:	131	425	15	25	431	19	57	51	174	4	22	75
User Adj:	1.00	1.00	1.00	1.00	1.00	1.00	1.00	1.00	1.00	1.00	1.00	1.00
PHF Adj:	1.00	1.00	1.00	1.00	1.00	1.00	1.00	1.00	1.00	1.00	1.00	1.00
PHF Volume:	131	425	15	25	431	19	57	51	174	4	22	75
Reduct Vol:	0	0	0	0	0	0	0	0	0	0	0	0
Reduced Vol:	131	425	15	25	431	19	57	51	174	4	22	75
PCE Adj:	1.00	1.00	1.00	1.00	1.00	1.00	1.00	1.00	1.00	1.00	1.00	1.00
MLF Adj:	1.00	1.00	1.00	1.00	1.00	1.00	1.00	1.00	1.00	1.00	1.00	1.00
FinalVolume:	131	425	15	25	431	19	57	51	174	4	22	75
Saturation Flow Module:												
Sat/Lane:	1600	1600	1600	1600	1600	1600	1600	1600	1600	1600	1600	1600
Adjustment:	1.00	1.00	1.00	1.00	1.00	1.00	1.00	1.00	1.00	1.00	1.00	1.00
Lanes:	1.00	1.93	0.07	1.00	1.92	0.08	0.20	0.18	0.62	0.15	0.85	1.00
Final Sat.:	1600	3091	109	1600	3065	135	323	289	987	246	1354	1600
Capacity Analysis Module:												
Vol/Sat:	0.08	0.14	0.14	0.02	0.14	0.14	0.18	0.18	0.18	0.02	0.02	0.05
Crit Moves:	****				****			****				****

Newport Banning Ranch
Existing Conditions - ICU
AM Peak Hour

Level Of Service Computation Report
2000 HCM Unsignalized Method (Future Volume Alternative)

Intersection #3 Superior Ave/15th St

Average Delay (sec/veh): 1.7 Worst Case Level Of Service: C[19.6]

Street Name:	Superior Avenue						15th Street					
Approach:	North Bound			South Bound			East Bound			West Bound		
Movement:	L -	T -	R	L -	T -	R	L -	T -	R	L -	T -	R
Control:	Uncontrolled			Uncontrolled			Stop Sign			Stop Sign		
Rights:	Include			Include			Include			Include		
Lanes:	1 0 2	0	0	0 0 1	1	0	1 0 0	0	1	0 0 0	0	0
Volume Module:												
Base Vol:	77	799	0	0	328	59	64	0	21	0	0	0
Growth Adj:	1.00	1.00	1.00	1.00	1.00	1.00	1.00	1.00	1.00	1.00	1.00	1.00
Initial Bse:	77	799	0	0	328	59	64	0	21	0	0	0
Added Vol:	0	0	0	0	0	0	0	0	0	0	0	0
PasserByVol:	0	0	0	0	0	0	0	0	0	0	0	0
Initial Fut:	77	799	0	0	328	59	64	0	21	0	0	0
User Adj:	1.00	1.00	1.00	1.00	1.00	1.00	1.00	1.00	1.00	1.00	1.00	1.00
PHF Adj:	1.00	1.00	1.00	1.00	1.00	1.00	1.00	1.00	1.00	1.00	1.00	1.00
PHF Volume:	77	799	0	0	328	59	64	0	21	0	0	0
Reduct Vol:	0	0	0	0	0	0	0	0	0	0	0	0
FinalVolume:	77	799	0	0	328	59	64	0	21	0	0	0
Critical Gap Module:												
Critical Gp:	4.1	xxxx	xxxxx	xxxxx	xxxx	xxxxx	6.8	xxxx	6.9	xxxxx	xxxx	xxxxx
FollowUpTim:	2.2	xxxx	xxxxx	xxxxx	xxxx	xxxxx	3.5	xxxx	3.3	xxxxx	xxxx	xxxxx
Capacity Module:												
Cnflict Vol:	387	xxxx	xxxxx	xxxx	xxxx	xxxxx	911	xxxx	194	xxxx	xxxx	xxxxx
Potent Cap.:	1183	xxxx	xxxxx	xxxx	xxxx	xxxxx	277	xxxx	822	xxxx	xxxx	xxxxx
Move Cap.:	1183	xxxx	xxxxx	xxxx	xxxx	xxxxx	264	xxxx	822	xxxx	xxxx	xxxxx
Volume/Cap:	0.07	xxxx	xxxx	xxxx	xxxx	xxxx	0.24	xxxx	0.03	xxxx	xxxx	xxxx
Level Of Service Module:												
2Way95thQ:	0.2	xxxx	xxxxx	xxxx	xxxx	xxxxx	0.9	xxxx	0.1	xxxx	xxxx	xxxxx
Control Del:	8.3	xxxx	xxxxx	xxxxx	xxxx	xxxxx	23.0	xxxx	9.5	xxxxx	xxxx	xxxxx
LOS by Move:	A	*	*	*	*	*	C	*	A	*	*	*
Movement:	LT -	LTR -	RT	LT -	LTR -	RT	LT -	LTR -	RT	LT -	LTR -	RT
Shared Cap.:	xxxx	xxxx	xxxxx	xxxx	xxxx	xxxxx	xxxx	xxxx	xxxxx	xxxx	xxxx	xxxxx
SharedQueue:	xxxxx	xxxx	xxxxx	xxxxx	xxxx	xxxxx	xxxxx	xxxx	xxxxx	xxxxx	xxxx	xxxxx
Shrd ConDel:	xxxxx	xxxx	xxxxx	xxxxx	xxxx	xxxxx	xxxxx	xxxx	xxxxx	xxxxx	xxxx	xxxxx
Shared LOS:	*	*	*	*	*	*	*	*	*	*	*	*
ApproachDel:	xxxxxx			xxxxxx			19.6			xxxxxx		
ApproachLOS:	*			*			C			*		

Note: Queue reported is the number of cars per lane.

Newport Banning Ranch
Existing Conditions - ICU
AM Peak Hour

Level Of Service Computation Report
ICU 1(Loss as Cycle Length %) Method (Future Volume Alternative)

Intersection #4 Superior Ave/Placentia Ave

Cycle (sec):	100	Critical Vol./Cap.(X):	0.503
Loss Time (sec):	0 (Y+R=4.0 sec)	Average Delay (sec/veh):	xxxxxx
Optimal Cycle:	37	Level Of Service:	A

Street Name:	Superior Avenue						Placentia Avenue					
Approach:	North Bound			South Bound			East Bound			West Bound		
Movement:	L -	T -	R	L -	T -	R	L -	T -	R	L -	T -	R
Control:	Protected			Protected			Permitted			Permitted		
Rights:	Include			Include			Include			Include		
Min. Green:	0	0	0	0	0	0	0	0	0	0	0	0
Lanes:	1 0	1 1	0	1 0	1 1	0	1 0	1 0	1	0 1	0 1	0
Volume Module:												
Base Vol:	346	803	33	57	243	9	18	325	268	8	227	61
Growth Adj:	1.00	1.00	1.00	1.00	1.00	1.00	1.00	1.00	1.00	1.00	1.00	1.00
Initial Bse:	346	803	33	57	243	9	18	325	268	8	227	61
Added Vol:	0	0	0	0	0	0	0	0	0	0	0	0
0:	0	0	0	0	0	0	0	0	0	0	0	0
Initial Fut:	346	803	33	57	243	9	18	325	268	8	227	61
User Adj:	1.00	1.00	1.00	1.00	1.00	1.00	1.00	1.00	1.00	1.00	1.00	1.00
PHF Adj:	1.00	1.00	1.00	1.00	1.00	1.00	1.00	1.00	1.00	1.00	1.00	1.00
PHF Volume:	346	803	33	57	243	9	18	325	268	8	227	61
Reduct Vol:	0	0	0	0	0	0	0	0	0	0	0	0
Reduced Vol:	346	803	33	57	243	9	18	325	268	8	227	61
PCE Adj:	1.00	1.00	1.00	1.00	1.00	1.00	1.00	1.00	1.00	1.00	1.00	1.00
MLF Adj:	1.00	1.00	1.00	1.00	1.00	1.00	1.00	1.00	1.00	1.00	1.00	1.00
FinalVolume:	346	803	33	57	243	9	18	325	268	8	227	61
Saturation Flow Module:												
Sat/Lane:	1600	1600	1600	1600	1600	1600	1600	1600	1600	1600	1600	1600
Adjustment:	1.00	1.00	1.00	1.00	1.00	1.00	1.00	1.00	1.00	1.00	1.00	1.00
Lanes:	1.00	1.92	0.08	1.00	1.93	0.07	1.00	1.00	1.00	0.05	1.54	0.41
Final Sat.:	1600	3074	126	1600	3086	114	1600	1600	1600	86	2454	659
Capacity Analysis Module:												
Vol/Sat:	0.22	0.26	0.26	0.04	0.08	0.08	0.01	0.20	0.17	0.01	0.09	0.09
Crit Moves:	****				****			****		****		

Newport Banning Ranch
Existing Conditions - ICU
AM Peak Hour

Level Of Service Computation Report
ICU 1(Loss as Cycle Length %) Method (Future Volume Alternative)

Intersection #5 Hospital Rd/Newport Blvd

Cycle (sec):	120	Critical Vol./Cap.(X):	0.486
Loss Time (sec):	0 (Y+R=4.0 sec)	Average Delay (sec/veh):	xxxxxx
Optimal Cycle:	44	Level Of Service:	A

Street Name:	Newport Boulevard						Hospital Road					
Approach:	North Bound			South Bound			East Bound			West Bound		
Movement:	L - T - R			L - T - R			L - T - R			L - T - R		
Control:	Protected			Protected			Protected			Protected		
Rights:	Include			Include			Include			Include		
Min. Green:	0	0	0	0	0	0	0	0	0	0	0	0
Lanes:	1 0	3 0	1	1 0	3 0	1	2 0	1 0	1	1 0	1 1	0
Volume Module:												
Base Vol:	129	1373	96	56	1066	368	197	124	199	65	224	28
Growth Adj:	1.00	1.00	1.00	1.00	1.00	1.00	1.00	1.00	1.00	1.00	1.00	1.00
Initial Bse:	129	1373	96	56	1066	368	197	124	199	65	224	28
Added Vol:	0	0	0	0	0	0	0	0	0	0	0	0
PasserByVol:	0	0	0	0	0	0	0	0	0	0	0	0
Initial Fut:	129	1373	96	56	1066	368	197	124	199	65	224	28
User Adj:	1.00	1.00	1.00	1.00	1.00	1.00	1.00	1.00	1.00	1.00	1.00	1.00
PHF Adj:	1.00	1.00	1.00	1.00	1.00	1.00	1.00	1.00	1.00	1.00	1.00	1.00
PHF Volume:	129	1373	96	56	1066	368	197	124	199	65	224	28
Reduct Vol:	0	0	0	0	0	0	0	0	0	0	0	0
Reduced Vol:	129	1373	96	56	1066	368	197	124	199	65	224	28
PCE Adj:	1.00	1.00	1.00	1.00	1.00	1.00	1.00	1.00	1.00	1.00	1.00	1.00
MLF Adj:	1.00	1.00	1.00	1.00	1.00	1.00	1.00	1.00	1.00	1.00	1.00	1.00
FinalVolume:	129	1373	96	56	1066	368	197	124	199	65	224	28
Saturation Flow Module:												
Sat/Lane:	1600	1600	1600	1600	1600	1600	1600	1600	1600	1600	1600	1600
Adjustment:	1.00	1.00	1.00	1.00	1.00	1.00	1.00	1.00	1.00	1.00	1.00	1.00
Lanes:	1.00	3.00	1.00	1.00	3.00	1.00	2.00	1.00	1.00	1.00	1.78	0.22
Final Sat.:	1600	4800	1600	1600	4800	1600	3200	1600	1600	1600	2844	356
Capacity Analysis Module:												
Vol/Sat:	0.08	0.29	0.06	0.04	0.22	0.23	0.06	0.08	0.12	0.04	0.08	0.08
Crit Moves:		****		****					****	****		

Newport Banning Ranch
Existing Conditions - ICU
AM Peak Hour

Level Of Service Computation Report
ICU 1(Loss as Cycle Length %) Method (Future Volume Alternative)

Intersection #6 Orange St/W. Coast Hwy

Cycle (sec):	120	Critical Vol./Cap.(X):	0.731
Loss Time (sec):	0 (Y+R=4.0 sec)	Average Delay (sec/veh):	xxxxxx
Optimal Cycle:	69	Level Of Service:	C

Street Name:	Orange Street						W. Coast Highway					
Approach:	North Bound			South Bound			East Bound			West Bound		
Movement:	L -	T -	R	L -	T -	R	L -	T -	R	L -	T -	R
Control:	Permitted			Permitted			Protected			Protected		
Rights:	Include			Include			Include			Include		
Min. Green:	0	0	0	0	0	0	0	0	0	0	0	0
Lanes:	0 1	0 0	1	0 1	0 0	1	1 0	2 1	0	1 0	3 0	1
Volume Module:												
Base Vol:	49	1	70	40	2	19	11	3095	10	43	870	17
Growth Adj:	1.00	1.00	1.00	1.00	1.00	1.00	1.00	1.00	1.00	1.00	1.00	1.00
Initial Bse:	49	1	70	40	2	19	11	3095	10	43	870	17
Added Vol:	0	0	0	0	0	0	0	0	0	0	0	0
PasserByVol:	0	0	0	0	0	0	0	0	0	0	0	0
Initial Fut:	49	1	70	40	2	19	11	3095	10	43	870	17
User Adj:	1.00	1.00	1.00	1.00	1.00	1.00	1.00	1.00	1.00	1.00	1.00	1.00
PHF Adj:	1.00	1.00	1.00	1.00	1.00	1.00	1.00	1.00	1.00	1.00	1.00	1.00
PHF Volume:	49	1	70	40	2	19	11	3095	10	43	870	17
Reduct Vol:	0	0	0	0	0	0	0	0	0	0	0	0
Reduced Vol:	49	1	70	40	2	19	11	3095	10	43	870	17
PCE Adj:	1.00	1.00	1.00	1.00	1.00	1.00	1.00	1.00	1.00	1.00	1.00	1.00
MLF Adj:	1.00	1.00	1.00	1.00	1.00	1.00	1.00	1.00	1.00	1.00	1.00	1.00
FinalVolume:	49	1	70	40	2	19	11	3095	10	43	870	17
Saturation Flow Module:												
Sat/Lane:	1600	1600	1600	1600	1600	1600	1600	1600	1600	1600	1600	1600
Adjustment:	1.00	1.00	1.00	1.00	1.00	1.00	1.00	1.00	1.00	1.00	1.00	1.00
Lanes:	0.98	0.02	1.00	0.95	0.05	1.00	1.00	2.99	0.01	1.00	3.00	1.00
Final Sat.:	1568	32	1600	1524	76	1600	1600	4785	15	1600	4800	1600
Capacity Analysis Module:												
Vol/Sat:	0.03	0.03	0.04	0.03	0.03	0.01	0.01	0.65	0.65	0.03	0.18	0.01
Crit Moves:	****				****			****		****		

Newport Banning Ranch
Existing Conditions - ICU
AM Peak Hour

Level Of Service Computation Report
ICU 1(Loss as Cycle Length %) Method (Future Volume Alternative)

Intersection #7 Prospect St/W. Coast Hwy

Cycle (sec):	120	Critical Vol./Cap.(X):	0.724
Loss Time (sec):	0 (Y+R=4.0 sec)	Average Delay (sec/veh):	xxxxxx
Optimal Cycle:	67	Level Of Service:	C

Street Name:	Prospect Street						W. Coast Highway					
Approach:	North Bound			South Bound			East Bound			West Bound		
Movement:	L -	T -	R	L -	T -	R	L -	T -	R	L -	T -	R
Control:	Permitted			Permitted			Protected			Protected		
Rights:	Include			Include			Include			Include		
Min. Green:	0	0	0	0	0	0	0	0	0	0	0	0
Lanes:	0 1	0 0	1	0 0	1! 0	0	1 0	2 1	0	1 0	2 1	0
Volume Module:												
Base Vol:	19	0	33	267	0	7	17	2490	5	26	1112	34
Growth Adj:	1.00	1.00	1.00	1.00	1.00	1.00	1.00	1.00	1.00	1.00	1.00	1.00
Initial Bse:	19	0	33	267	0	7	17	2490	5	26	1112	34
Added Vol:	0	0	0	0	0	0	0	0	0	0	0	0
PasserByVol:	0	0	0	0	0	0	0	0	0	0	0	0
Initial Fut:	19	0	33	267	0	7	17	2490	5	26	1112	34
User Adj:	1.00	1.00	1.00	1.00	1.00	1.00	1.00	1.00	1.00	1.00	1.00	1.00
PHF Adj:	1.00	1.00	1.00	1.00	1.00	1.00	1.00	1.00	1.00	1.00	1.00	1.00
PHF Volume:	19	0	33	267	0	7	17	2490	5	26	1112	34
Reduct Vol:	0	0	0	0	0	0	0	0	0	0	0	0
Reduced Vol:	19	0	33	267	0	7	17	2490	5	26	1112	34
PCE Adj:	1.00	1.00	1.00	1.00	1.00	1.00	1.00	1.00	1.00	1.00	1.00	1.00
MLF Adj:	1.00	1.00	1.00	1.00	1.00	1.00	1.00	1.00	1.00	1.00	1.00	1.00
FinalVolume:	19	0	33	267	0	7	17	2490	5	26	1112	34
Saturation Flow Module:												
Sat/Lane:	1600	1600	1600	1600	1600	1600	1600	1600	1600	1600	1600	1600
Adjustment:	1.00	1.00	1.00	1.00	1.00	1.00	1.00	1.00	1.00	1.00	1.00	1.00
Lanes:	1.00	0.00	1.00	0.97	0.00	0.03	1.00	2.99	0.01	1.00	2.91	0.09
Final Sat.:	1600	0	1600	1559	0	41	1600	4790	10	1600	4658	142
Capacity Analysis Module:												
Vol/Sat:	0.01	0.00	0.02	0.17	0.00	0.17	0.01	0.52	0.52	0.02	0.24	0.24
Crit Moves:			****	****				****		****		

Newport Banning Ranch
Existing Conditions - ICU
AM Peak Hour

Level Of Service Computation Report
ICU 1(Loss as Cycle Length %) Method (Future Volume Alternative)

Intersection #8 W. Coast Hwy/Superior Ave

Cycle (sec):	120	Critical Vol./Cap.(X):	0.649
Loss Time (sec):	0 (Y+R=4.0 sec)	Average Delay (sec/veh):	xxxxxx
Optimal Cycle:	65	Level Of Service:	B

Street Name:	Superior Avenue						W. Coast Highway					
Approach:	North Bound			South Bound			East Bound			West Bound		
Movement:	L - T - R			L - T - R			L - T - R			L - T - R		
Control:	Split Phase			Split Phase			Protected			Protected		
Rights:	Include			Ovl			Include			Include		
Min. Green:	0	0	0	0	0	0	0	0	0	0	0	0
Lanes:	1 1	0 1	0	1 1	1 0	2	2 0	3 0	1	1 0	3 1	0
Volume Module:												
Base Vol:	168	266	114	170	165	247	709	1914	211	95	768	155
Growth Adj:	1.00	1.00	1.00	1.00	1.00	1.00	1.00	1.00	1.00	1.00	1.00	1.00
Initial Bse:	168	266	114	170	165	247	709	1914	211	95	768	155
Added Vol:	0	0	0	0	0	0	0	0	0	0	0	0
PasserByVol:	0	0	0	0	0	0	0	0	0	0	0	0
Initial Fut:	168	266	114	170	165	247	709	1914	211	95	768	155
User Adj:	1.00	1.00	1.00	1.00	1.00	1.00	1.00	1.00	1.00	1.00	1.00	1.00
PHF Adj:	1.00	1.00	1.00	1.00	1.00	1.00	1.00	1.00	1.00	1.00	1.00	1.00
PHF Volume:	168	266	114	170	165	247	709	1914	211	95	768	155
Reduct Vol:	0	0	0	0	0	0	0	0	0	0	0	0
Reduced Vol:	168	266	114	170	165	247	709	1914	211	95	768	155
PCE Adj:	1.00	1.00	1.00	1.00	1.00	1.00	1.00	1.00	1.00	1.00	1.00	1.00
MLF Adj:	1.00	1.00	1.00	1.00	1.00	1.00	1.00	1.00	1.00	1.00	1.00	1.00
FinalVolume:	168	266	114	170	165	247	709	1914	211	95	768	155
OvlAdjVol:						0						
Saturation Flow Module:												
Sat/Lane:	1600	1600	1600	1600	1600	1600	1600	1600	1600	1600	1600	1600
Adjustment:	1.00	1.00	1.00	1.00	1.00	1.00	1.00	1.00	1.00	1.00	1.00	1.00
Lanes:	1.00	1.38	0.62	1.52	1.48	2.00	2.00	3.00	1.00	1.00	3.33	0.67
Final Sat.:	1600	2204	996	2436	2364	3200	3200	4800	1600	1600	5325	1075
Capacity Analysis Module:												
Vol/Sat:	0.11	0.12	0.11	0.07	0.07	0.08	0.22	0.40	0.13	0.06	0.14	0.14
OvlAdjV/S:						0.00						
Crit Moves:	****			****			****			****		

Newport Banning Ranch
Existing Conditions - ICU
AM Peak Hour

Level Of Service Computation Report
ICU 1(Loss as Cycle Length %) Method (Future Volume Alternative)

Intersection #9 Newport Blvd/W. Coast Hwy

Cycle (sec):	120	Critical Vol./Cap.(X):	0.831
Loss Time (sec):	0 (Y+R=4.0 sec)	Average Delay (sec/veh):	xxxxxx
Optimal Cycle:	135	Level Of Service:	D

Street Name:	Newport Boulevard						W. Coast Highway					
Approach:	North Bound			South Bound			East Bound			West Bound		
Movement:	L -	T -	R	L -	T -	R	L -	T -	R	L -	T -	R
Control:	Protected			Protected			Protected			Protected		
Rights:	Include			Include			Ignore			Ignore		
Min. Green:	0	0	0	0	0	0	0	0	0	0	0	0
Lanes:	0 0	0 0	0	2 0	0 0	1	0 0	2 0	1	0 0	3 0	1
Volume Module:												
Base Vol:	0	0	0	383	0	288	0	2082	188	0	812	349
Growth Adj:	1.00	1.00	1.00	1.00	1.00	1.00	1.00	1.00	1.00	1.00	1.00	1.00
Initial Bse:	0	0	0	383	0	288	0	2082	188	0	812	349
Added Vol:	0	0	0	0	0	0	0	0	0	0	0	0
PasserByVol:	0	0	0	0	0	0	0	0	0	0	0	0
Initial Fut:	0	0	0	383	0	288	0	2082	188	0	812	349
User Adj:	1.00	1.00	1.00	1.00	1.00	1.00	1.00	1.00	0.00	1.00	1.00	0.00
PHF Adj:	1.00	1.00	1.00	1.00	1.00	1.00	1.00	1.00	0.00	1.00	1.00	0.00
PHF Volume:	0	0	0	383	0	288	0	2082	0	0	812	0
Reduct Vol:	0	0	0	0	0	0	0	0	0	0	0	0
Reduced Vol:	0	0	0	383	0	288	0	2082	0	0	812	0
PCE Adj:	1.00	1.00	1.00	1.00	1.00	1.00	1.00	1.00	0.00	1.00	1.00	0.00
MLF Adj:	1.00	1.00	1.00	1.00	1.00	1.00	1.00	1.00	0.00	1.00	1.00	0.00
FinalVolume:	0	0	0	383	0	288	0	2082	0	0	812	0
Saturation Flow Module:												
Sat/Lane:	1600	1600	1600	1600	1600	1600	1600	1600	1600	1600	1600	1600
Adjustment:	1.00	1.00	1.00	1.00	1.00	1.00	1.00	1.00	1.00	1.00	1.00	1.00
Lanes:	0.00	0.00	0.00	2.00	0.00	1.00	0.00	2.00	1.00	0.00	3.00	1.00
Final Sat.:	0	0	0	3200	0	1600	0	3200	1600	0	4800	1600
Capacity Analysis Module:												
Vol/Sat:	0.00	0.00	0.00	0.12	0.00	0.18	0.00	0.65	0.00	0.00	0.17	0.00
Crit Moves:						****		****		****		

Newport Banning Ranch
Existing Conditions - ICU
AM Peak Hour

Level Of Service Computation Report
ICU 1(Loss as Cycle Length %) Method (Future Volume Alternative)

Intersection #10 Riverside Ave/W. Coast Hwy

Cycle (sec):	120	Critical Vol./Cap.(X):	0.652
Loss Time (sec):	0 (Y+R=4.0 sec)	Average Delay (sec/veh):	xxxxxx
Optimal Cycle:	53	Level Of Service:	B

Street Name:	Riverside Avenue						W. Coast Highway					
Approach:	North Bound			South Bound			East Bound			West Bound		
Movement:	L -	T -	R	L -	T -	R	L -	T -	R	L -	T -	R
Control:	Permitted			Permitted			Protected			Protected		
Rights:	Include			Ovl			Include			Include		
Min. Green:	0	0	0	0	0	0	0	0	0	0	0	0
Lanes:	0 0	0 0	1	0 1	0 0	1	1 0	1 1	0	1 0	3 0	1
Volume Module:												
Base Vol:	0	0	1	77	4	304	312	1893	4	17	1124	67
Growth Adj:	1.00	1.00	1.00	1.00	1.00	1.00	1.00	1.00	1.00	1.00	1.00	1.00
Initial Bse:	0	0	1	77	4	304	312	1893	4	17	1124	67
Added Vol:	0	0	0	0	0	0	0	0	0	0	0	0
PasserByVol:	0	0	0	0	0	0	0	0	0	0	0	0
Initial Fut:	0	0	1	77	4	304	312	1893	4	17	1124	67
User Adj:	1.00	1.00	1.00	1.00	1.00	1.00	1.00	1.00	1.00	1.00	1.00	1.00
PHF Adj:	1.00	1.00	1.00	1.00	1.00	1.00	1.00	1.00	1.00	1.00	1.00	1.00
PHF Volume:	0	0	1	77	4	304	312	1893	4	17	1124	67
Reduct Vol:	0	0	0	0	0	0	0	0	0	0	0	0
Reduced Vol:	0	0	1	77	4	304	312	1893	4	17	1124	67
PCE Adj:	1.00	1.00	1.00	1.00	1.00	1.00	1.00	1.00	1.00	1.00	1.00	1.00
MLF Adj:	1.00	1.00	1.00	1.00	1.00	1.00	1.00	1.00	1.00	1.00	1.00	1.00
FinalVolume:	0	0	1	77	4	304	312	1893	4	17	1124	67
OvlAdjVol:						0						
Saturation Flow Module:												
Sat/Lane:	1600	1600	1600	1600	1600	1600	1600	1600	1600	1600	1600	1600
Adjustment:	1.00	1.00	1.00	1.00	1.00	1.00	1.00	1.00	1.00	1.00	1.00	1.00
Lanes:	0.00	0.00	1.00	0.95	0.05	1.00	1.00	1.99	0.01	1.00	3.00	1.00
Final Sat.:	0	0	1600	1521	79	1600	1600	3193	7	1600	4800	1600
Capacity Analysis Module:												
Vol/Sat:	0.00	0.00	0.00	0.05	0.05	0.19	0.20	0.59	0.59	0.01	0.23	0.04
OvlAdjV/S:						0.00						
Crit Moves:	****			****				****		****		

Newport Banning Ranch
Existing Conditions - ICU
AM Peak Hour

Level Of Service Computation Report
ICU 1(Loss as Cycle Length %) Method (Future Volume Alternative)

Intersection #11 Tustin Ave/W. Coast Hwy

Cycle (sec):	120	Critical Vol./Cap.(X):	0.653
Loss Time (sec):	0 (Y+R=4.0 sec)	Average Delay (sec/veh):	xxxxxx
Optimal Cycle:	180	Level Of Service:	B

Street Name:	Tustin Avenue						W. Coast Highway					
Approach:	North Bound			South Bound			East Bound			West Bound		
Movement:	L -	T -	R	L -	T -	R	L -	T -	R	L -	T -	R
Control:	Permitted			Permitted			Protected			Permitted		
Rights:	Include			Include			Include			Include		
Min. Green:	0	0	0	0	0	0	0	0	0	0	0	0
Lanes:	0 0	1! 0	0	0 0	1! 0	0	1 0	1 1	0	0 0	3 0	1
Volume Module:												
Base Vol:	0	0	0	33	1	14	42	1992	1	0	1220	35
Growth Adj:	1.00	1.00	1.00	1.00	1.00	1.00	1.00	1.00	1.00	1.00	1.00	1.00
Initial Bse:	0	0	0	33	1	14	42	1992	1	0	1220	35
Added Vol:	0	0	0	0	0	0	0	0	0	0	0	0
PasserByVol:	0	0	0	0	0	0	0	0	0	0	0	0
Initial Fut:	0	0	0	33	1	14	42	1992	1	0	1220	35
User Adj:	1.00	1.00	1.00	1.00	1.00	1.00	1.00	1.00	1.00	1.00	1.00	1.00
PHF Adj:	1.00	1.00	1.00	1.00	1.00	1.00	1.00	1.00	1.00	1.00	1.00	1.00
PHF Volume:	0	0	0	33	1	14	42	1992	1	0	1220	35
Reduct Vol:	0	0	0	0	0	0	0	0	0	0	0	0
Reduced Vol:	0	0	0	33	1	14	42	1992	1	0	1220	35
PCE Adj:	1.00	1.00	1.00	1.00	1.00	1.00	1.00	1.00	1.00	1.00	1.00	1.00
MLF Adj:	1.00	1.00	1.00	1.00	1.00	1.00	1.00	1.00	1.00	1.00	1.00	1.00
FinalVolume:	0	0	0	33	1	14	42	1992	1	0	1220	35
Saturation Flow Module:												
Sat/Lane:	1600	1600	1600	1600	1600	1600	1600	1600	1600	1600	1600	1600
Adjustment:	1.00	1.00	1.00	1.00	1.00	1.00	1.00	1.00	1.00	1.00	1.00	1.00
Lanes:	0.00	1.00	0.00	0.69	0.02	0.29	1.00	1.99	0.01	0.00	3.00	1.00
Final Sat.:	0	1600	0	1100	33	467	1600	3198	2	0	4800	1600
Capacity Analysis Module:												
Vol/Sat:	0.00	0.00	0.00	0.02	0.03	0.03	0.03	0.62	0.62	0.00	0.25	0.02
Crit Moves:					****			****				

Newport Banning Ranch
Existing Conditions - ICU
AM Peak Hour

Level Of Service Computation Report
ICU 1(Loss as Cycle Length %) Method (Future Volume Alternative)

Intersection #12 Dover Dr/W. Coast Hwy

Cycle (sec):	120	Critical Vol./Cap.(X):	0.633
Loss Time (sec):	0 (Y+R=4.0 sec)	Average Delay (sec/veh):	xxxxxx
Optimal Cycle:	62	Level Of Service:	B

Street Name:	Dover Drive						W. Coast Highway					
Approach:	North Bound			South Bound			East Bound			West Bound		
Movement:	L - T - R			L - T - R			L - T - R			L - T - R		
Control:	Split Phase			Split Phase			Protected			Protected		
Rights:	Include			Include			Include			Ignore		
Min. Green:	0	0	0	0	0	0	0	0	0	0	0	0
Lanes:	1 0 1	1 0		3 0 1	0 1		2 0 2	1 0		1 0 3	0 1	
Volume Module:												
Base Vol:	16	61	29	840	51	108	117	1912	25	42	1212	469
Growth Adj:	1.00	1.00	1.00	1.00	1.00	1.00	1.00	1.00	1.00	1.00	1.00	1.00
Initial Bse:	16	61	29	840	51	108	117	1912	25	42	1212	469
Added Vol:	0	0	0	0	0	0	0	0	0	0	0	0
PasserByVol:	0	0	0	0	0	0	0	0	0	0	0	0
Initial Fut:	16	61	29	840	51	108	117	1912	25	42	1212	469
User Adj:	1.00	1.00	1.00	1.00	1.00	1.00	1.00	1.00	1.00	1.00	1.00	0.00
PHF Adj:	1.00	1.00	1.00	1.00	1.00	1.00	1.00	1.00	1.00	1.00	1.00	0.00
PHF Volume:	16	61	29	840	51	108	117	1912	25	42	1212	0
Reduct Vol:	0	0	0	0	0	0	0	0	0	0	0	0
Reduced Vol:	16	61	29	840	51	108	117	1912	25	42	1212	0
PCE Adj:	1.00	1.00	1.00	1.00	1.00	1.00	1.00	1.00	1.00	1.00	1.00	0.00
MLF Adj:	1.00	1.00	1.00	1.00	1.00	1.00	1.00	1.00	1.00	1.00	1.00	0.00
FinalVolume:	16	61	29	840	51	108	117	1912	25	42	1212	0
Saturation Flow Module:												
Sat/Lane:	1600	1600	1600	1600	1600	1600	1600	1600	1600	1600	1600	1600
Adjustment:	1.00	1.00	1.00	1.00	1.00	1.00	1.00	1.00	1.00	1.00	1.00	1.00
Lanes:	1.00	1.36	0.64	3.00	1.00	1.00	2.00	2.96	0.04	1.00	3.00	1.00
Final Sat.:	1600	2169	1031	4800	1600	1600	3200	4738	62	1600	4800	1600
Capacity Analysis Module:												
Vol/Sat:	0.01	0.03	0.03	0.17	0.03	0.07	0.04	0.40	0.40	0.03	0.25	0.00
Crit Moves:			****	****				****		****		

Newport Banning Ranch
Existing Conditions - ICU
AM Peak Hour

Level Of Service Computation Report
ICU 1(Loss as Cycle Length %) Method (Future Volume Alternative)

Intersection #13 Magnolia St/Hamilton Ave

Cycle (sec):	100	Critical Vol./Cap.(X):	0.534
Loss Time (sec):	5 (Y+R=4.0 sec)	Average Delay (sec/veh):	xxxxxx
Optimal Cycle:	25	Level Of Service:	A

Street Name:	Magnolia Street						Hamilton Avenue					
Approach:	North Bound			South Bound			East Bound			West Bound		
Movement:	L - T - R			L - T - R			L - T - R			L - T - R		
Control:	Prot+Permit			Prot+Permit			Permitted			Permitted		
Rights:	Include			Include			Include			Include		
Min. Green:	0	0	0	0	0	0	0	0	0	0	0	0
Lanes:	1 0	1 1	0	1 0	2 0	1	1 0	0 1	0	1 0	1 0	1
Volume Module:												
Base Vol:	56	241	42	197	303	35	67	273	145	66	172	368
Growth Adj:	1.00	1.00	1.00	1.00	1.00	1.00	1.00	1.00	1.00	1.00	1.00	1.00
Initial Bse:	56	241	42	197	303	35	67	273	145	66	172	368
Added Vol:	0	0	0	0	0	0	0	0	0	0	0	0
PasserByVol:	0	0	0	0	0	0	0	0	0	0	0	0
Initial Fut:	56	241	42	197	303	35	67	273	145	66	172	368
User Adj:	1.00	1.00	1.00	1.00	1.00	1.00	1.00	1.00	1.00	1.00	1.00	1.00
PHF Adj:	1.00	1.00	1.00	1.00	1.00	1.00	1.00	1.00	1.00	1.00	1.00	1.00
PHF Volume:	56	241	42	197	303	35	67	273	145	66	172	368
Reduct Vol:	0	0	0	0	0	0	0	0	0	0	0	0
Reduced Vol:	56	241	42	197	303	35	67	273	145	66	172	368
PCE Adj:	1.00	1.00	1.00	1.00	1.00	1.00	1.00	1.00	1.00	1.00	1.00	1.00
MLF Adj:	1.00	1.00	1.00	1.00	1.00	1.00	1.00	1.00	1.00	1.00	1.00	1.00
FinalVolume:	56	241	42	197	303	35	67	273	145	66	172	368
Saturation Flow Module:												
Sat/Lane:	1600	1600	1600	1600	1600	1600	1600	1600	1600	1600	1600	1600
Adjustment:	1.06	1.06	1.06	1.06	1.06	1.06	1.06	1.06	1.06	1.06	1.06	1.06
Lanes:	1.00	1.70	0.30	1.00	2.00	1.00	1.00	0.65	0.35	1.00	1.00	1.00
Final Sat.:	1700	2895	505	1700	3400	1700	1700	1110	590	1700	1700	1700
Capacity Analysis Module:												
Vol/Sat:	0.03	0.08	0.08	0.12	0.09	0.02	0.04	0.25	0.25	0.04	0.10	0.22
Crit Moves:		****		****				****		****		

Newport Banning Ranch
Existing Conditions - ICU
AM Peak Hour

Level Of Service Computation Report
ICU 1(Loss as Cycle Length %) Method (Future Volume Alternative)

Intersection #14 Bushard St/Hamilton Ave

Cycle (sec):	100	Critical Vol./Cap.(X):	0.422
Loss Time (sec):	5 (Y+R=4.0 sec)	Average Delay (sec/veh):	xxxxxx
Optimal Cycle:	21	Level Of Service:	A

Street Name:	Bushard Street						Hamilton Avenue					
Approach:	North Bound			South Bound			East Bound			West Bound		
Movement:	L - T - R			L - T - R			L - T - R			L - T - R		
Control:	Permitted			Permitted			Permitted			Permitted		
Rights:	Include			Include			Include			Include		
Min. Green:	0	0	0	0	0	0	0	0	0	0	0	0
Lanes:	1 0	1 1	0	1 0	1 1	0	1 0	1 1	0	1 0	1 1	0
Volume Module:												
Base Vol:	66	176	51	188	297	145	59	526	33	52	409	94
Growth Adj:	1.00	1.00	1.00	1.00	1.00	1.00	1.00	1.00	1.00	1.00	1.00	1.00
Initial Bse:	66	176	51	188	297	145	59	526	33	52	409	94
Added Vol:	0	0	0	0	0	0	0	0	0	0	0	0
PasserByVol:	0	0	0	0	0	0	0	0	0	0	0	0
Initial Fut:	66	176	51	188	297	145	59	526	33	52	409	94
User Adj:	1.00	1.00	1.00	1.00	1.00	1.00	1.00	1.00	1.00	1.00	1.00	1.00
PHF Adj:	1.00	1.00	1.00	1.00	1.00	1.00	1.00	1.00	1.00	1.00	1.00	1.00
PHF Volume:	66	176	51	188	297	145	59	526	33	52	409	94
Reduct Vol:	0	0	0	0	0	0	0	0	0	0	0	0
Reduced Vol:	66	176	51	188	297	145	59	526	33	52	409	94
PCE Adj:	1.00	1.00	1.00	1.00	1.00	1.00	1.00	1.00	1.00	1.00	1.00	1.00
MLF Adj:	1.00	1.00	1.00	1.00	1.00	1.00	1.00	1.00	1.00	1.00	1.00	1.00
FinalVolume:	66	176	51	188	297	145	59	526	33	52	409	94
Saturation Flow Module:												
Sat/Lane:	1600	1600	1600	1600	1600	1600	1600	1600	1600	1600	1600	1600
Adjustment:	1.06	1.06	1.06	1.06	1.06	1.06	1.06	1.06	1.06	1.06	1.06	1.06
Lanes:	1.00	1.55	0.45	1.00	1.34	0.66	1.00	1.88	0.12	1.00	1.63	0.37
Final Sat.:	1700	2636	764	1700	2285	1115	1700	3199	201	1700	2765	635
Capacity Analysis Module:												
Vol/Sat:	0.04	0.07	0.07	0.11	0.13	0.13	0.03	0.16	0.16	0.03	0.15	0.15
Crit Moves:		****		****				****		****		

Newport Banning Ranch
Existing Conditions - ICU
AM Peak Hour

Level Of Service Computation Report
ICU 1(Loss as Cycle Length %) Method (Future Volume Alternative)

Intersection #15 Brookhurst St/Hamilton Ave (Victoria St)

Cycle (sec):	100	Critical Vol./Cap.(X):	0.674
Loss Time (sec):	5 (Y+R=4.0 sec)	Average Delay (sec/veh):	xxxxxx
Optimal Cycle:	35	Level Of Service:	B

Street Name:	Brookhurst						Hamilton Avenue (Victoria Street)					
Approach:	North Bound			South Bound			East Bound			West Bound		
Movement:	L - T - R			L - T - R			L - T - R			L - T - R		
Control:	Protected			Protected			Prot+Permit			Prot+Permit		
Rights:	Include			Include			Include			Include		
Min. Green:	0	0	0	0	0	0	0	0	0	0	0	0
Lanes:	1 0	3 0	1	2 0	2 1	0	1 0	1 1	0	1 0	2 0	1
Volume Module:												
Base Vol:	59	289	321	501	483	110	95	683	47	124	348	277
Growth Adj:	1.00	1.00	1.00	1.00	1.00	1.00	1.00	1.00	1.00	1.00	1.00	1.00
Initial Bse:	59	289	321	501	483	110	95	683	47	124	348	277
Added Vol:	0	0	0	0	0	0	0	0	0	0	0	0
PasserByVol:	0	0	0	0	0	0	0	0	0	0	0	0
Initial Fut:	59	289	321	501	483	110	95	683	47	124	348	277
User Adj:	1.00	1.00	1.00	1.00	1.00	1.00	1.00	1.00	1.00	1.00	1.00	1.00
PHF Adj:	1.00	1.00	1.00	1.00	1.00	1.00	1.00	1.00	1.00	1.00	1.00	1.00
PHF Volume:	59	289	321	501	483	110	95	683	47	124	348	277
Reduct Vol:	0	0	0	0	0	0	0	0	0	0	0	0
Reduced Vol:	59	289	321	501	483	110	95	683	47	124	348	277
PCE Adj:	1.00	1.00	1.00	1.00	1.00	1.00	1.00	1.00	1.00	1.00	1.00	1.00
MLF Adj:	1.00	1.00	1.00	1.00	1.00	1.00	1.00	1.00	1.00	1.00	1.00	1.00
FinalVolume:	59	289	321	501	483	110	95	683	47	124	348	277
Saturation Flow Module:												
Sat/Lane:	1600	1600	1600	1600	1600	1600	1600	1600	1600	1600	1600	1600
Adjustment:	1.06	1.06	1.06	1.06	1.06	1.06	1.06	1.06	1.06	1.06	1.06	1.06
Lanes:	1.00	3.00	1.00	2.00	2.44	0.56	1.00	1.87	0.13	1.00	2.00	1.00
Final Sat.:	1700	5100	1700	3400	4154	946	1700	3181	219	1700	3400	1700
Capacity Analysis Module:												
Vol/Sat:	0.03	0.06	0.19	0.15	0.12	0.12	0.06	0.21	0.21	0.07	0.10	0.16
Crit Moves:			****	****				****		****		

Newport Banning Ranch
Existing Conditions - ICU
AM Peak Hour

Level Of Service Computation Report
ICU 1(Loss as Cycle Length %) Method (Future Volume Alternative)

Intersection #16 Magnolia St/Banning Ave

Cycle (sec):	100	Critical Vol./Cap.(X):	0.233
Loss Time (sec):	5 (Y+R=4.0 sec)	Average Delay (sec/veh):	xxxxxx
Optimal Cycle:	16	Level Of Service:	A

Street Name:	Magnolia Street						Banning Avenue					
Approach:	North Bound			South Bound			East Bound			West Bound		
Movement:	L -	T -	R	L -	T -	R	L -	T -	R	L -	T -	R
Control:	Protected			Protected			Split Phase			Split Phase		
Rights:	Include			Include			Include			Include		
Min. Green:	0	0	0	0	0	0	0	0	0	0	0	0
Lanes:	0 0	1 1	0	1 0	2 0	0	0 0	0 0	0	2 0	0 0	1
Volume Module:												
Base Vol:	0	197	37	82	376	0	0	0	0	62	0	112
Growth Adj:	1.00	1.00	1.00	1.00	1.00	1.00	1.00	1.00	1.00	1.00	1.00	1.00
Initial Bse:	0	197	37	82	376	0	0	0	0	62	0	112
Added Vol:	0	0	0	0	0	0	0	0	0	0	0	0
PasserByVol:	0	0	0	0	0	0	0	0	0	0	0	0
Initial Fut:	0	197	37	82	376	0	0	0	0	62	0	112
User Adj:	1.00	1.00	1.00	1.00	1.00	1.00	1.00	1.00	1.00	1.00	1.00	1.00
PHF Adj:	1.00	1.00	1.00	1.00	1.00	1.00	1.00	1.00	1.00	1.00	1.00	1.00
PHF Volume:	0	197	37	82	376	0	0	0	0	62	0	112
Reduct Vol:	0	0	0	0	0	0	0	0	0	0	0	0
Reduced Vol:	0	197	37	82	376	0	0	0	0	62	0	112
PCE Adj:	1.00	1.00	1.00	1.00	1.00	1.00	1.00	1.00	1.00	1.00	1.00	1.00
MLF Adj:	1.00	1.00	1.00	1.00	1.00	1.00	1.00	1.00	1.00	1.00	1.00	1.00
FinalVolume:	0	197	37	82	376	0	0	0	0	62	0	112
Saturation Flow Module:												
Sat/Lane:	1600	1600	1600	1600	1600	1600	1600	1600	1600	1600	1600	1600
Adjustment:	1.06	1.06	1.06	1.06	1.06	1.06	1.06	1.06	1.06	1.06	1.06	1.06
Lanes:	0.00	1.68	0.32	1.00	2.00	0.00	0.00	0.00	0.00	2.00	0.00	1.00
Final Sat.:	0	2862	538	1700	3400	0	0	0	0	3400	0	1700
Capacity Analysis Module:												
Vol/Sat:	0.00	0.07	0.07	0.05	0.11	0.00	0.00	0.00	0.00	0.02	0.00	0.07
Crit Moves:		****		****								****

Newport Banning Ranch
Existing Conditions - ICU
AM Peak Hour

Level Of Service Computation Report
2000 HCM 4-Way Stop Method (Future Volume Alternative)

Intersection #17 Bushard St/Banning Ave

Cycle (sec):	100	Critical Vol./Cap.(X):	0.276
Loss Time (sec):	5 (Y+R=4.0 sec)	Average Delay (sec/veh):	9.9
Optimal Cycle:	0	Level Of Service:	A

Street Name:	Bushard Street						Banning Avenue					
Approach:	North Bound			South Bound			East Bound			West Bound		
Movement:	L - T - R			L - T - R			L - T - R			L - T - R		
Control:	Stop Sign			Stop Sign			Stop Sign			Stop Sign		
Rights:	Include			Include			Include			Include		
Min. Green:	0	0	0	0	0	0	0	0	0	0	0	0
Lanes:	1 0 1	1 0		1 0 1	1 0		1 0 0	1 0		1 0 0	1 0	
Volume Module:												
Base Vol:	14	86	15	16	220	121	53	84	28	7	114	19
Growth Adj:	1.00	1.00	1.00	1.00	1.00	1.00	1.00	1.00	1.00	1.00	1.00	1.00
Initial Bse:	14	86	15	16	220	121	53	84	28	7	114	19
Added Vol:	0	0	0	0	0	0	0	0	0	0	0	0
PasserByVol:	0	0	0	0	0	0	0	0	0	0	0	0
Initial Fut:	14	86	15	16	220	121	53	84	28	7	114	19
User Adj:	1.00	1.00	1.00	1.00	1.00	1.00	1.00	1.00	1.00	1.00	1.00	1.00
PHF Adj:	1.00	1.00	1.00	1.00	1.00	1.00	1.00	1.00	1.00	1.00	1.00	1.00
PHF Volume:	14	86	15	16	220	121	53	84	28	7	114	19
Reduct Vol:	0	0	0	0	0	0	0	0	0	0	0	0
Reduced Vol:	14	86	15	16	220	121	53	84	28	7	114	19
PCE Adj:	1.00	1.00	1.00	1.00	1.00	1.00	1.00	1.00	1.00	1.00	1.00	1.00
MLF Adj:	1.00	1.00	1.00	1.00	1.00	1.00	1.00	1.00	1.00	1.00	1.00	1.00
FinalVolume:	14	86	15	16	220	121	53	84	28	7	114	19
Saturation Flow Module:												
Adjustment:	1.00	1.00	1.00	1.00	1.00	1.00	1.00	1.00	1.00	1.00	1.00	1.00
Lanes:	1.00	1.70	0.30	1.00	1.29	0.71	1.00	0.75	0.25	1.00	0.86	0.14
Final Sat.:	507	941	167	555	796	468	535	447	149	529	501	83
Capacity Analysis Module:												
Vol/Sat:	0.03	0.09	0.09	0.03	0.28	0.26	0.10	0.19	0.19	0.01	0.23	0.23
Crit Moves:		****			****			****				****
Delay/Veh:	9.6	9.4	9.2	9.1	10.3	9.7	9.7	9.6	9.6	9.2	10.1	10.1
Delay Adj:	1.00	1.00	1.00	1.00	1.00	1.00	1.00	1.00	1.00	1.00	1.00	1.00
AdjDel/Veh:	9.6	9.4	9.2	9.1	10.3	9.7	9.7	9.6	9.6	9.2	10.1	10.1
LOS by Move:	A	A	A	A	B	A	A	A	A	A	B	B
ApproachDel:	9.4			10.1			9.7			10.1		
Delay Adj:	1.00			1.00			1.00			1.00		
ApprAdjDel:	9.4			10.1			9.7			10.1		
LOS by Appr:	A			B			A			B		
AllWayAvgQ:	0.0	0.1	0.1	0.0	0.4	0.3	0.1	0.2	0.2	0.0	0.3	0.3

Newport Banning Ranch
Existing Conditions - ICU
AM Peak Hour

Note: Queue reported is the number of cars per lane.

Newport Banning Ranch
Existing Conditions - ICU
AM Peak Hour

Level Of Service Computation Report
ICU 1(Loss as Cycle Length %) Method (Future Volume Alternative)

Intersection #18 Brookhurst St/Banning Ave

Cycle (sec):	100	Critical Vol./Cap.(X):	0.253
Loss Time (sec):	5 (Y+R=4.0 sec)	Average Delay (sec/veh):	xxxxxx
Optimal Cycle:	16	Level Of Service:	A

Street Name:	Brookhurst Street						Banning Avenue					
Approach:	North Bound			South Bound			East Bound			West Bound		
Movement:	L -	T -	R	L -	T -	R	L -	T -	R	L -	T -	R
Control:	Protected			Protected			Split Phase			Split Phase		
Rights:	Include			Include			Include			Include		
Min. Green:	0	0	0	0	0	0	0	0	0	0	0	0
Lanes:	1 0	3 0	0	0 0	2 1	0	1 0	0 0	1	0 0	0 0	0
Volume Module:												
Base Vol:	7	477	0	0	535	102	126	0	14	0	0	0
Growth Adj:	1.00	1.00	1.00	1.00	1.00	1.00	1.00	1.00	1.00	1.00	1.00	1.00
Initial Bse:	7	477	0	0	535	102	126	0	14	0	0	0
Added Vol:	0	0	0	0	0	0	0	0	0	0	0	0
PasserByVol:	0	0	0	0	0	0	0	0	0	0	0	0
Initial Fut:	7	477	0	0	535	102	126	0	14	0	0	0
User Adj:	1.00	1.00	1.00	1.00	1.00	1.00	1.00	1.00	1.00	1.00	1.00	1.00
PHF Adj:	1.00	1.00	1.00	1.00	1.00	1.00	1.00	1.00	1.00	1.00	1.00	1.00
PHF Volume:	7	477	0	0	535	102	126	0	14	0	0	0
Reduct Vol:	0	0	0	0	0	0	0	0	0	0	0	0
Reduced Vol:	7	477	0	0	535	102	126	0	14	0	0	0
PCE Adj:	1.00	1.00	1.00	1.00	1.00	1.00	1.00	1.00	1.00	1.00	1.00	1.00
MLF Adj:	1.00	1.00	1.00	1.00	1.00	1.00	1.00	1.00	1.00	1.00	1.00	1.00
FinalVolume:	7	477	0	0	535	102	126	0	14	0	0	0
Saturation Flow Module:												
Sat/Lane:	1600	1600	1600	1600	1600	1600	1600	1600	1600	1600	1600	1600
Adjustment:	1.06	1.06	1.06	1.06	1.06	1.06	1.06	1.06	1.06	1.06	1.06	1.06
Lanes:	1.00	3.00	0.00	0.00	2.52	0.48	1.00	0.00	1.00	0.00	0.00	0.00
Final Sat.:	1700	5100	0	0	4283	817	1700	0	1700	0	0	0
Capacity Analysis Module:												
Vol/Sat:	0.00	0.09	0.00	0.00	0.12	0.12	0.07	0.00	0.01	0.00	0.00	0.00
Crit Moves:	****				****		****					

Newport Banning Ranch
Existing Conditions - ICU
AM Peak Hour

Level Of Service Computation Report
ICU 1(Loss as Cycle Length %) Method (Future Volume Alternative)

Intersection #19 Magnolia St/PCH

Cycle (sec):	120	Critical Vol./Cap.(X):	0.475
Loss Time (sec):	6 (Y+R=4.0 sec)	Average Delay (sec/veh):	xxxxxx
Optimal Cycle:	25	Level Of Service:	A

Street Name:	Magnolia Street						Pacific Coast Highway					
Approach:	North Bound			South Bound			East Bound			West Bound		
Movement:	L - T - R			L - T - R			L - T - R			L - T - R		
Control:	Split Phase			Split Phase			Protected			Protected		
Rights:	Include			Include			Include			Include		
Min. Green:	0	0	0	0	0	0	0	0	0	0	0	0
Lanes:	1 0	0 1	0	1 1	0 0	1	1 0	3 0	1	1 0	3 0	1
Volume Module:												
Base Vol:	3	24	7	232	41	137	116	1607	17	18	614	50
Growth Adj:	1.00	1.00	1.00	1.00	1.00	1.00	1.00	1.00	1.00	1.00	1.00	1.00
Initial Bse:	3	24	7	232	41	137	116	1607	17	18	614	50
Added Vol:	0	0	0	0	0	0	0	0	0	0	0	0
PasserByVol:	0	0	0	0	0	0	0	0	0	0	0	0
Initial Fut:	3	24	7	232	41	137	116	1607	17	18	614	50
User Adj:	1.00	1.00	1.00	1.00	1.00	1.00	1.00	1.00	1.00	1.00	1.00	1.00
PHF Adj:	1.00	1.00	1.00	1.00	1.00	1.00	1.00	1.00	1.00	1.00	1.00	1.00
PHF Volume:	3	24	7	232	41	137	116	1607	17	18	614	50
Reduct Vol:	0	0	0	0	0	0	0	0	0	0	0	0
Reduced Vol:	3	24	7	232	41	137	116	1607	17	18	614	50
PCE Adj:	1.00	1.00	1.00	1.00	1.00	1.00	1.00	1.00	1.00	1.00	1.00	1.00
MLF Adj:	1.00	1.00	1.00	1.00	1.00	1.00	1.00	1.00	1.00	1.00	1.00	1.00
FinalVolume:	3	24	7	232	41	137	116	1607	17	18	614	50
Saturation Flow Module:												
Sat/Lane:	1600	1600	1600	1600	1600	1600	1600	1600	1600	1600	1600	1600
Adjustment:	1.06	1.06	1.06	1.06	1.06	1.06	1.06	1.06	1.06	1.06	1.06	1.06
Lanes:	1.00	0.77	0.23	1.70	0.30	1.00	1.00	3.00	1.00	1.00	3.00	1.00
Final Sat.:	1700	1316	384	2889	511	1700	1700	5100	1700	1700	5100	1700
Capacity Analysis Module:												
Vol/Sat:	0.00	0.02	0.02	0.08	0.08	0.08	0.07	0.32	0.01	0.01	0.12	0.03
Crit Moves:		****				****		****		****		

Newport Banning Ranch
Existing Conditions - ICU
AM Peak Hour

Level Of Service Computation Report
ICU 1(Loss as Cycle Length %) Method (Future Volume Alternative)

Intersection #20 Brookhurst St/Bushard St

Cycle (sec):	100	Critical Vol./Cap.(X):	0.315
Loss Time (sec):	5 (Y+R=4.0 sec)	Average Delay (sec/veh):	xxxxxx
Optimal Cycle:	18	Level Of Service:	A

Street Name:	Brookhurst Street									Bushard Street								
Approach:	North Bound			South Bound			East Bound			West Bound		
Movement:	L - T - R			L - T - R			L - T - R			L - T - R		
Control:	Protected			Protected			Permitted			Permitted		
Rights:	Include			Include			Include			Include		
Min. Green:	0	0	0	0	0	0	0	0	0	0	0	0
Lanes:	1 0 2 1 0			1 0 3 0 1			1 0 0 0 1			0 0 0 1 0		
Volume Module:												
Base Vol:	79	427	2	2	487	10	8	0	210	0	1	4
Growth Adj:	1.00	1.00	1.00	1.00	1.00	1.00	1.00	1.00	1.00	1.00	1.00	1.00
Initial Bse:	79	427	2	2	487	10	8	0	210	0	1	4
Added Vol:	0	0	0	0	0	0	0	0	0	0	0	0
PasserByVol:	0	0	0	0	0	0	0	0	0	0	0	0
Initial Fut:	79	427	2	2	487	10	8	0	210	0	1	4
User Adj:	1.00	1.00	1.00	1.00	1.00	1.00	1.00	1.00	1.00	1.00	1.00	1.00
PHF Adj:	1.00	1.00	1.00	1.00	1.00	1.00	1.00	1.00	1.00	1.00	1.00	1.00
PHF Volume:	79	427	2	2	487	10	8	0	210	0	1	4
Reduct Vol:	0	0	0	0	0	0	0	0	0	0	0	0
Reduced Vol:	79	427	2	2	487	10	8	0	210	0	1	4
PCE Adj:	1.00	1.00	1.00	1.00	1.00	1.00	1.00	1.00	1.00	1.00	1.00	1.00
MLF Adj:	1.00	1.00	1.00	1.00	1.00	1.00	1.00	1.00	1.00	1.00	1.00	1.00
FinalVolume:	79	427	2	2	487	10	8	0	210	0	1	4
Saturation Flow Module:												
Sat/Lane:	1600	1600	1600	1600	1600	1600	1600	1600	1600	1600	1600	1600
Adjustment:	1.06	1.06	1.06	1.06	1.06	1.06	1.06	1.06	1.06	1.06	1.06	1.06
Lanes:	1.00	2.99	0.01	1.00	3.00	1.00	1.00	0.00	1.00	0.00	0.20	0.80
Final Sat.:	1700	5076	24	1700	5100	1700	1700	0	1700	0	340	1360
Capacity Analysis Module:												
Vol/Sat:	0.05	0.08	0.08	0.00	0.10	0.01	0.00	0.00	0.12	0.00	0.00	0.00
Crit Moves:	****				****				****	****		

Newport Banning Ranch
Existing Conditions - ICU
AM Peak Hour

Level Of Service Computation Report
ICU 1(Loss as Cycle Length %) Method (Future Volume Alternative)

Intersection #21 Brookhurst St/PCH

Cycle (sec):	120	Critical Vol./Cap.(X):	0.560
Loss Time (sec):	6 (Y+R=4.0 sec)	Average Delay (sec/veh):	xxxxxx
Optimal Cycle:	29	Level Of Service:	A

Street Name:	Brookhurst Street									Pacific Coast HIghway								
Approach:	North Bound				South Bound				East Bound				West Bound					
Movement:	L	-	T	-	R	L	-	T	-	R	L	-	T	-	R	L	-	T	-	R
Control:	Split Phase					Split Phase					Protected					Protected				
Rights:	Include					Include					Include					Ovl				
Min. Green:	0	0	0			0	0	0			0	0	0			0	0	0		
Lanes:	1	0	0	1	0	2	0	1	0	1	1	0	3	0	1	1	0	3	0	1

Volume Module:												
Base Vol:	4	19	12	513	6	117	166	1721	2	6	639	305
Growth Adj:	1.00	1.00	1.00	1.00	1.00	1.00	1.00	1.00	1.00	1.00	1.00	1.00
Initial Bse:	4	19	12	513	6	117	166	1721	2	6	639	305
Added Vol:	0	0	0	0	0	0	0	0	0	0	0	0
PasserByVol:	0	0	0	0	0	0	0	0	0	0	0	0
Initial Fut:	4	19	12	513	6	117	166	1721	2	6	639	305
User Adj:	1.00	1.00	1.00	1.00	1.00	1.00	1.00	1.00	1.00	1.00	1.00	1.00
PHF Adj:	1.00	1.00	1.00	1.00	1.00	1.00	1.00	1.00	1.00	1.00	1.00	1.00
PHF Volume:	4	19	12	513	6	117	166	1721	2	6	639	305
Reduct Vol:	0	0	0	0	0	0	0	0	0	0	0	0
Reduced Vol:	4	19	12	513	6	117	166	1721	2	6	639	305
PCE Adj:	1.00	1.00	1.00	1.00	1.00	1.00	1.00	1.00	1.00	1.00	1.00	1.00
MLF Adj:	1.00	1.00	1.00	1.00	1.00	1.00	1.00	1.00	1.00	1.00	1.00	1.00
FinalVolume:	4	19	12	513	6	117	166	1721	2	6	639	305
OvlAdjVol:												49

Saturation Flow Module:												
Sat/Lane:	1600	1600	1600	1600	1600	1600	1600	1600	1600	1600	1600	1600
Adjustment:	1.06	1.06	1.06	1.06	1.06	1.06	1.06	1.06	1.06	1.06	1.06	1.06
Lanes:	1.00	0.61	0.39	2.00	1.00	1.00	1.00	3.00	1.00	1.00	3.00	1.00
Final Sat.:	1700	1042	658	3400	1700	1700	1700	5100	1700	1700	5100	1700

Capacity Analysis Module:												
Vol/Sat:	0.00	0.02	0.02	0.15	0.00	0.07	0.10	0.34	0.00	0.00	0.13	0.18
OvlAdjV/S:												0.03
Crit Moves:		****		****				****		****		

Newport Banning Ranch
Existing Conditions - ICU
AM Peak Hour

Level Of Service Computation Report
ICU 1(Loss as Cycle Length %) Method (Future Volume Alternative)

Intersection #22 Placentia Ave/Victoria St

Cycle (sec):	100	Critical Vol./Cap.(X):	0.744
Loss Time (sec):	0 (Y+R=4.0 sec)	Average Delay (sec/veh):	xxxxxx
Optimal Cycle:	89	Level Of Service:	C

Street Name:	Placentia Avenue						Victoria Street					
Approach:	North Bound			South Bound			East Bound			West Bound		
Movement:	L - T - R			L - T - R			L - T - R			L - T - R		
Control:	Protected			Protected			Protected			Protected		
Rights:	Include			Include			Ovl			Include		
Min. Green:	0	0	0	0	0	0	0	0	0	0	0	0
Lanes:	2 0 2	0 1		1 0 2	0 1		1 0 2	0 1		1 0 2	0 1	
Volume Module:												
Base Vol:	271	404	169	122	559	45	80	1192	464	179	493	101
Growth Adj:	1.00	1.00	1.00	1.00	1.00	1.00	1.00	1.00	1.00	1.00	1.00	1.00
Initial Bse:	271	404	169	122	559	45	80	1192	464	179	493	101
Added Vol:	0	0	0	0	0	0	0	0	0	0	0	0
PasserByVol:	0	0	0	0	0	0	0	0	0	0	0	0
Initial Fut:	271	404	169	122	559	45	80	1192	464	179	493	101
User Adj:	1.00	1.00	1.00	1.00	1.00	1.00	1.00	1.00	1.00	1.00	1.00	1.00
PHF Adj:	1.00	1.00	1.00	1.00	1.00	1.00	1.00	1.00	1.00	1.00	1.00	1.00
PHF Volume:	271	404	169	122	559	45	80	1192	464	179	493	101
Reduct Vol:	0	0	0	0	0	0	0	0	0	0	0	0
Reduced Vol:	271	404	169	122	559	45	80	1192	464	179	493	101
PCE Adj:	1.00	1.00	1.00	1.00	1.00	1.00	1.00	1.00	1.00	1.00	1.00	1.00
MLF Adj:	1.00	1.00	1.00	1.00	1.00	1.00	1.00	1.00	1.00	1.00	1.00	1.00
FinalVolume:	271	404	169	122	559	45	80	1192	464	179	493	101
OvlAdjVol:									328			
Saturation Flow Module:												
Sat/Lane:	1600	1600	1600	1600	1600	1600	1600	1600	1600	1600	1600	1600
Adjustment:	1.00	1.00	1.00	1.00	1.00	1.00	1.00	1.00	1.00	1.00	1.00	1.00
Lanes:	2.00	2.00	1.00	1.00	2.00	1.00	1.00	2.00	1.00	1.00	2.00	1.00
Final Sat.:	3200	3200	1600	1600	3200	1600	1600	3200	1600	1600	3200	1600
Capacity Analysis Module:												
Vol/Sat:	0.08	0.13	0.11	0.08	0.17	0.03	0.05	0.37	0.29	0.11	0.15	0.06
OvlAdjV/S:									0.21			
Crit Moves:	****				****			****		****		

Newport Banning Ranch
Existing Conditions - ICU
AM Peak Hour

Level Of Service Computation Report
ICU 1(Loss as Cycle Length %) Method (Future Volume Alternative)

Intersection #23 Pomona Ave/Victoria St

Cycle (sec):	100	Critical Vol./Cap.(X):	0.628
Loss Time (sec):	0 (Y+R=4.0 sec)	Average Delay (sec/veh):	xxxxxx
Optimal Cycle:	39	Level Of Service:	B

Street Name:	Pomona Avenue						Victoria Street					
Approach:	North Bound			South Bound			East Bound			West Bound		
Movement:	L - T - R			L - T - R			L - T - R			L - T - R		
Control:	Permitted			Permitted			Permitted			Permitted		
Rights:	Include			Include			Include			Include		
Min. Green:	0	0	0	0	0	0	0	0	0	0	0	0
Lanes:	1 0	0 1	0	1 0	0 1	0	1 0	2 0	1	1 0	2 0	1
Volume Module:												
Base Vol:	32	89	77	10	110	14	15	1486	52	86	690	18
Growth Adj:	1.00	1.00	1.00	1.00	1.00	1.00	1.00	1.00	1.00	1.00	1.00	1.00
Initial Bse:	32	89	77	10	110	14	15	1486	52	86	690	18
Added Vol:	0	0	0	0	0	0	0	0	0	0	0	0
PasserByVol:	0	0	0	0	0	0	0	0	0	0	0	0
Initial Fut:	32	89	77	10	110	14	15	1486	52	86	690	18
User Adj:	1.00	1.00	1.00	1.00	1.00	1.00	1.00	1.00	1.00	1.00	1.00	1.00
PHF Adj:	1.00	1.00	1.00	1.00	1.00	1.00	1.00	1.00	1.00	1.00	1.00	1.00
PHF Volume:	32	89	77	10	110	14	15	1486	52	86	690	18
Reduct Vol:	0	0	0	0	0	0	0	0	0	0	0	0
Reduced Vol:	32	89	77	10	110	14	15	1486	52	86	690	18
PCE Adj:	1.00	1.00	1.00	1.00	1.00	1.00	1.00	1.00	1.00	1.00	1.00	1.00
MLF Adj:	1.00	1.00	1.00	1.00	1.00	1.00	1.00	1.00	1.00	1.00	1.00	1.00
FinalVolume:	32	89	77	10	110	14	15	1486	52	86	690	18
Saturation Flow Module:												
Sat/Lane:	1600	1600	1600	1600	1600	1600	1600	1600	1600	1600	1600	1600
Adjustment:	1.00	1.00	1.00	1.00	1.00	1.00	1.00	1.00	1.00	1.00	1.00	1.00
Lanes:	1.00	0.54	0.46	1.00	0.89	0.11	1.00	2.00	1.00	1.00	2.00	1.00
Final Sat.:	1600	858	742	1600	1419	181	1600	3200	1600	1600	3200	1600
Capacity Analysis Module:												
Vol/Sat:	0.02	0.10	0.10	0.01	0.08	0.08	0.01	0.46	0.03	0.05	0.22	0.01
Crit Moves:		****		****				****		****		

Newport Banning Ranch
Existing Conditions - ICU
AM Peak Hour

Level Of Service Computation Report
ICU 1(Loss as Cycle Length %) Method (Future Volume Alternative)

Intersection #24 Harbor Blvd/Victoria St

Cycle (sec):	100	Critical Vol./Cap.(X):	0.699
Loss Time (sec):	0 (Y+R=4.0 sec)	Average Delay (sec/veh):	xxxxxx
Optimal Cycle:	76	Level Of Service:	B

Street Name:	Harbor Boulevard						Victoria Street					
Approach:	North Bound			South Bound			East Bound			West Bound		
Movement:	L - T - R			L - T - R			L - T - R			L - T - R		
Control:	Protected			Protected			Protected			Protected		
Rights:	Include			Ovl			Include			Include		
Min. Green:	0	0	0	0	0	0	0	0	0	0	0	0
Lanes:	1 0 3 0 1			1 0 3 0 1			2 0 1 1 0			2 0 2 0 1		
Volume Module:												
Base Vol:	60	615	90	119	933	166	248	1272	89	135	623	109
Growth Adj:	1.00	1.00	1.00	1.00	1.00	1.00	1.00	1.00	1.00	1.00	1.00	1.00
Initial Bse:	60	615	90	119	933	166	248	1272	89	135	623	109
Added Vol:	0	0	0	0	0	0	0	0	0	0	0	0
PasserByVol:	0	0	0	0	0	0	0	0	0	0	0	0
Initial Fut:	60	615	90	119	933	166	248	1272	89	135	623	109
User Adj:	1.00	1.00	1.00	1.00	1.00	1.00	1.00	1.00	1.00	1.00	1.00	1.00
PHF Adj:	1.00	1.00	1.00	1.00	1.00	1.00	1.00	1.00	1.00	1.00	1.00	1.00
PHF Volume:	60	615	90	119	933	166	248	1272	89	135	623	109
Reduct Vol:	0	0	0	0	0	0	0	0	0	0	0	0
Reduced Vol:	60	615	90	119	933	166	248	1272	89	135	623	109
PCE Adj:	1.00	1.00	1.00	1.00	1.00	1.00	1.00	1.00	1.00	1.00	1.00	1.00
MLF Adj:	1.00	1.00	1.00	1.00	1.00	1.00	1.00	1.00	1.00	1.00	1.00	1.00
FinalVolume:	60	615	90	119	933	166	248	1272	89	135	623	109
OvlAdjVol:						42						
Saturation Flow Module:												
Sat/Lane:	1600	1600	1600	1600	1600	1600	1600	1600	1600	1600	1600	1600
Adjustment:	1.00	1.00	1.00	1.00	1.00	1.00	1.00	1.00	1.00	1.00	1.00	1.00
Lanes:	1.00	3.00	1.00	1.00	3.00	1.00	2.00	1.87	0.13	2.00	2.00	1.00
Final Sat.:	1600	4800	1600	1600	4800	1600	3200	2991	209	3200	3200	1600
Capacity Analysis Module:												
Vol/Sat:	0.04	0.13	0.06	0.07	0.19	0.10	0.08	0.43	0.43	0.04	0.19	0.07
OvlAdjV/S:						0.03						
Crit Moves:	****				****			****		****		

Newport Banning Ranch
Existing Conditions - ICU
AM Peak Hour

Level Of Service Computation Report
ICU 1(Loss as Cycle Length %) Method (Future Volume Alternative)

Intersection #25 Newport Blvd/Victoria St [Ramp]

Cycle (sec):	120	Critical Vol./Cap.(X):	0.552
Loss Time (sec):	0 (Y+R=4.0 sec)	Average Delay (sec/veh):	xxxxxx
Optimal Cycle:	41	Level Of Service:	A

Street Name:	Newport Boulevard						Victoria Street					
Approach:	North Bound			South Bound			East Bound			West Bound		
Movement:	L -	T -	R	L -	T -	R	L -	T -	R	L -	T -	R
Control:	Permitted			Permitted			Protected			Protected		
Rights:	Include			Ignore			Include			Include		
Min. Green:	0	0	0	0	0	0	0	0	0	0	0	0
Lanes:	0 0	0 0	0	1 1	2 0	1	0 0	2 1	0	1 0	1 0	0
Volume Module:												
Base Vol:	0	0	0	304	706	749	0	1629	30	77	279	0
Growth Adj:	1.00	1.00	1.00	1.00	1.00	1.00	1.00	1.00	1.00	1.00	1.00	1.00
Initial Bse:	0	0	0	304	706	749	0	1629	30	77	279	0
Added Vol:	0	0	0	0	0	0	0	0	0	0	0	0
PasserByVol:	0	0	0	0	0	0	0	0	0	0	0	0
Initial Fut:	0	0	0	304	706	749	0	1629	30	77	279	0
User Adj:	1.00	1.00	1.00	1.00	1.00	0.00	1.00	1.00	1.00	1.00	1.00	1.00
PHF Adj:	1.00	1.00	1.00	1.00	1.00	0.00	1.00	1.00	1.00	1.00	1.00	1.00
PHF Volume:	0	0	0	304	706	0	0	1629	30	77	279	0
Reduct Vol:	0	0	0	0	0	0	0	0	0	0	0	0
Reduced Vol:	0	0	0	304	706	0	0	1629	30	77	279	0
PCE Adj:	1.00	1.00	1.00	1.00	1.00	0.00	1.00	1.00	1.00	1.00	1.00	1.00
MLF Adj:	1.00	1.00	1.00	1.00	1.00	0.00	1.00	1.00	1.00	1.00	1.00	1.00
FinalVolume:	0	0	0	304	706	0	0	1629	30	77	279	0
Saturation Flow Module:												
Sat/Lane:	1600	1600	1600	1600	1600	1600	1600	1600	1600	1600	1600	1600
Adjustment:	1.00	1.00	1.00	1.00	1.00	1.00	1.00	1.00	1.00	1.00	1.00	1.00
Lanes:	0.00	0.00	0.00	1.20	2.80	1.00	0.00	2.95	0.05	1.00	1.00	0.00
Final Sat.:	0	0	0	1926	4474	1600	0	4713	87	1600	1600	0
Capacity Analysis Module:												
Vol/Sat:	0.00	0.00	0.00	0.16	0.16	0.00	0.00	0.35	0.35	0.05	0.17	0.00
Crit Moves:				****				****		****		

Newport Banning Ranch
Existing Conditions - ICU
AM Peak Hour

Level Of Service Computation Report
ICU 1(Loss as Cycle Length %) Method (Future Volume Alternative)

Intersection #26 Newport Blvd /Victoria St (22nd St) [Ramp]

Cycle (sec):	120	Critical Vol./Cap.(X):	0.964
Loss Time (sec):	0 (Y+R=4.0 sec)	Average Delay (sec/veh):	xxxxxx
Optimal Cycle:	180	Level Of Service:	E

Street Name:	Newport Boulevard						Victoria Street (22nd Street)					
Approach:	North Bound			South Bound			East Bound			West Bound		
Movement:	L -	T -	R	L -	T -	R	L -	T -	R	L -	T -	R
Control:	Permitted			Permitted			Protected			Protected		
Rights:	Include			Include			Include			Include		
Min. Green:	0	0	0	0	0	0	0	0	0	0	0	0
Lanes:	0 1	2 0	1	0 0	0 0	0	2 0	2 0	0	0 0	1 0	1
Volume Module:												
Base Vol:	87	1212	32	0	0	0	1587	316	0	0	266	316
Growth Adj:	1.00	1.00	1.00	1.00	1.00	1.00	1.00	1.00	1.00	1.00	1.00	1.00
Initial Bse:	87	1212	32	0	0	0	1587	316	0	0	266	316
Added Vol:	0	0	0	0	0	0	0	0	0	0	0	0
PasserByVol:	0	0	0	0	0	0	0	0	0	0	0	0
Initial Fut:	87	1212	32	0	0	0	1587	316	0	0	266	316
User Adj:	1.00	1.00	1.00	1.00	1.00	1.00	1.00	1.00	1.00	1.00	1.00	1.00
PHF Adj:	1.00	1.00	1.00	1.00	1.00	1.00	1.00	1.00	1.00	1.00	1.00	1.00
PHF Volume:	87	1212	32	0	0	0	1587	316	0	0	266	316
Reduct Vol:	0	0	0	0	0	0	0	0	0	0	0	0
Reduced Vol:	87	1212	32	0	0	0	1587	316	0	0	266	316
PCE Adj:	1.00	1.00	1.00	1.00	1.00	1.00	1.00	1.00	1.00	1.00	1.00	1.00
MLF Adj:	1.00	1.00	1.00	1.00	1.00	1.00	1.00	1.00	1.00	1.00	1.00	1.00
FinalVolume:	87	1212	32	0	0	0	1587	316	0	0	266	316
Saturation Flow Module:												
Sat/Lane:	1600	1600	1600	1600	1600	1600	1600	1600	1600	1600	1600	1600
Adjustment:	1.00	1.00	1.00	1.00	1.00	1.00	1.00	1.00	1.00	1.00	1.00	1.00
Lanes:	0.20	2.80	1.00	0.00	0.00	0.00	2.00	2.00	0.00	0.00	1.00	1.00
Final Sat.:	321	4479	1600	0	0	0	3200	3200	0	0	1600	1600
Capacity Analysis Module:												
Vol/Sat:	0.05	0.27	0.02	0.00	0.00	0.00	0.50	0.10	0.00	0.00	0.17	0.20
Crit Moves:		****					****					****

Newport Banning Ranch
Existing Conditions - ICU
AM Peak Hour

Level Of Service Computation Report
2000 HCM 4-Way Stop Method (Future Volume Alternative)

Intersection #27 Whittier Ave/19th St

Cycle (sec):	100	Critical Vol./Cap.(X):	0.348
Loss Time (sec):	0 (Y+R=4.0 sec)	Average Delay (sec/veh):	9.9
Optimal Cycle:	0	Level Of Service:	A

Street Name:	Whittier Avenue						19th St					
Approach:	North Bound			South Bound			East Bound			West Bound		
Movement:	L -	T -	R	L -	T -	R	L -	T -	R	L -	T -	R
Control:	Stop Sign			Stop Sign			Stop Sign			Stop Sign		
Rights:	Include			Include			Include			Include		
Min. Green:	0	0	0	0	0	0	0	0	0	0	0	0
Lanes:	0 0	1! 0	0	0 1	0 0	0	1 0	0 1	0	1 0	0 1	0
Volume Module:												
Base Vol:	5	6	258	10	6	0	1	123	7	210	29	10
Growth Adj:	1.00	1.00	1.00	1.00	1.00	1.00	1.00	1.00	1.00	1.00	1.00	1.00
Initial Bse:	5	6	258	10	6	0	1	123	7	210	29	10
Added Vol:	0	0	0	0	0	0	0	0	0	0	0	0
PasserByVol:	0	0	0	0	0	0	0	0	0	0	0	0
Initial Fut:	5	6	258	10	6	0	1	123	7	210	29	10
User Adj:	1.00	1.00	1.00	1.00	1.00	1.00	1.00	1.00	1.00	1.00	1.00	1.00
PHF Adj:	1.00	1.00	1.00	1.00	1.00	1.00	1.00	1.00	1.00	1.00	1.00	1.00
PHF Volume:	5	6	258	10	6	0	1	123	7	210	29	10
Reduct Vol:	0	0	0	0	0	0	0	0	0	0	0	0
Reduced Vol:	5	6	258	10	6	0	1	123	7	210	29	10
PCE Adj:	1.00	1.00	1.00	1.00	1.00	1.00	1.00	1.00	1.00	1.00	1.00	1.00
MLF Adj:	1.00	1.00	1.00	1.00	1.00	1.00	1.00	1.00	1.00	1.00	1.00	1.00
FinalVolume:	5	6	258	10	6	0	1	123	7	210	29	10
Saturation Flow Module:												
Adjustment:	1.00	1.00	1.00	1.00	1.00	1.00	1.00	1.00	1.00	1.00	1.00	1.00
Lanes:	0.02	0.02	0.96	0.62	0.38	0.00	1.00	0.95	0.05	1.00	0.74	0.26
Final Sat.:	15	18	754	386	232	0	582	604	34	604	506	174
Capacity Analysis Module:												
Vol/Sat:	0.34	0.34	0.34	0.03	0.03	xxxx	0.00	0.20	0.20	0.35	0.06	0.06
Crit Moves:	****				****			****		****		
Delay/Veh:	9.4	9.4	9.4	8.5	8.5	0.0	8.6	9.4	9.4	11.4	8.1	8.1
Delay Adj:	1.00	1.00	1.00	1.00	1.00	1.00	1.00	1.00	1.00	1.00	1.00	1.00
AdjDel/Veh:	9.4	9.4	9.4	8.5	8.5	0.0	8.6	9.4	9.4	11.4	8.1	8.1
LOS by Move:	A	A	A	A	A	*	A	A	A	B	A	A
ApproachDel:	9.4			8.5			9.4			10.9		
Delay Adj:	1.00			1.00			1.00			1.00		
ApprAdjDel:	9.4			8.5			9.4			10.9		
LOS by Appr:	A			A			A			B		
AllWayAvgQ:	0.5	0.5	0.5	0.0	0.0	0.0	0.0	0.2	0.2	0.5	0.1	0.1

Newport Banning Ranch
Existing Conditions - ICU
AM Peak Hour

Note: Queue reported is the number of cars per lane.

Newport Banning Ranch
Existing Conditions - ICU
AM Peak Hour

Level Of Service Computation Report
2000 HCM 4-Way Stop Method (Future Volume Alternative)

Intersection #28 Monrovia Ave/19th St

Cycle (sec):	100	Critical Vol./Cap.(X):	0.749
Loss Time (sec):	0 (Y+R=4.0 sec)	Average Delay (sec/veh):	16.9
Optimal Cycle:	0	Level Of Service:	C

Street Name:	Monrovia Avenue						19th Street					
Approach:	North Bound			South Bound			East Bound			West Bound		
Movement:	L -	T -	R	L -	T -	R	L -	T -	R	L -	T -	R
Control:	Stop Sign			Stop Sign			Stop Sign			Stop Sign		
Rights:	Include			Include			Include			Include		
Min. Green:	0	0	0	0	0	0	0	0	0	0	0	0
Lanes:	0 1	0 0	1	0 0	1! 0	0	1 0	1 0	1	1 0	1 0	1
Volume Module:												
Base Vol:	31	10	162	79	19	1	4	403	34	154	213	30
Growth Adj:	1.00	1.00	1.00	1.00	1.00	1.00	1.00	1.00	1.00	1.00	1.00	1.00
Initial Bse:	31	10	162	79	19	1	4	403	34	154	213	30
Added Vol:	0	0	0	0	0	0	0	0	0	0	0	0
PasserByVol:	0	0	0	0	0	0	0	0	0	0	0	0
Initial Fut:	31	10	162	79	19	1	4	403	34	154	213	30
User Adj:	1.00	1.00	1.00	1.00	1.00	1.00	1.00	1.00	1.00	1.00	1.00	1.00
PHF Adj:	1.00	1.00	1.00	1.00	1.00	1.00	1.00	1.00	1.00	1.00	1.00	1.00
PHF Volume:	31	10	162	79	19	1	4	403	34	154	213	30
Reduct Vol:	0	0	0	0	0	0	0	0	0	0	0	0
Reduced Vol:	31	10	162	79	19	1	4	403	34	154	213	30
PCE Adj:	1.00	1.00	1.00	1.00	1.00	1.00	1.00	1.00	1.00	1.00	1.00	1.00
MLF Adj:	1.00	1.00	1.00	1.00	1.00	1.00	1.00	1.00	1.00	1.00	1.00	1.00
FinalVolume:	31	10	162	79	19	1	4	403	34	154	213	30
Saturation Flow Module:												
Adjustment:	1.00	1.00	1.00	1.00	1.00	1.00	1.00	1.00	1.00	1.00	1.00	1.00
Lanes:	0.76	0.24	1.00	0.80	0.19	0.01	1.00	1.00	1.00	1.00	1.00	1.00
Final Sat.:	346	112	533	358	86	5	493	538	590	482	517	569
Capacity Analysis Module:												
Vol/Sat:	0.09	0.09	0.30	0.22	0.22	0.22	0.01	0.75	0.06	0.32	0.41	0.05
Crit Moves:			****	****				****			****	
Delay/Veh:	10.7	10.7	11.4	12.2	12.2	12.2	9.8	25.3	8.9	13.1	13.7	9.0
Delay Adj:	1.00	1.00	1.00	1.00	1.00	1.00	1.00	1.00	1.00	1.00	1.00	1.00
AdjDel/Veh:	10.7	10.7	11.4	12.2	12.2	12.2	9.8	25.3	8.9	13.1	13.7	9.0
LOS by Move:	B	B	B	B	B	B	A	D	A	B	B	A
ApproachDel:	11.3			12.2			23.9			13.1		
Delay Adj:	1.00			1.00			1.00			1.00		
ApprAdjDel:	11.3			12.2			23.9			13.1		
LOS by Appr:	B			B			C			B		
AllWayAvgQ:	0.1	0.1	0.4	0.2	0.2	0.2	0.0	2.4	0.1	0.4	0.6	0.0

Newport Banning Ranch
Existing Conditions - ICU
AM Peak Hour

Note: Queue reported is the number of cars per lane.

Newport Banning Ranch
Existing Conditions - ICU
AM Peak Hour

Level Of Service Computation Report
ICU 1(Loss as Cycle Length %) Method (Future Volume Alternative)

Intersection #29 Placentia Ave/19th St

Cycle (sec):	100	Critical Vol./Cap.(X):	0.484
Loss Time (sec):	0 (Y+R=4.0 sec)	Average Delay (sec/veh):	xxxxxx
Optimal Cycle:	44	Level Of Service:	A

Street Name:	Placentia Avenue						19th Street					
Approach:	North Bound			South Bound			East Bound			West Bound		
Movement:	L - T - R			L - T - R			L - T - R			L - T - R		
Control:	Protected			Protected			Protected			Protected		
Rights:	Include			Include			Include			Include		
Min. Green:	0	0	0	0	0	0	0	0	0	0	0	0
Lanes:	1 0 2 0 1			1 0 1 1 0			2 0 1 1 0			2 0 2 0 1		
Volume Module:												
Base Vol:	31	412	217	140	495	115	201	582	33	219	328	165
Growth Adj:	1.00	1.00	1.00	1.00	1.00	1.00	1.00	1.00	1.00	1.00	1.00	1.00
Initial Bse:	31	412	217	140	495	115	201	582	33	219	328	165
Added Vol:	0	0	0	0	0	0	0	0	0	0	0	0
PasserByVol:	0	0	0	0	0	0	0	0	0	0	0	0
Initial Fut:	31	412	217	140	495	115	201	582	33	219	328	165
User Adj:	1.00	1.00	1.00	1.00	1.00	1.00	1.00	1.00	1.00	1.00	1.00	1.00
PHF Adj:	1.00	1.00	1.00	1.00	1.00	1.00	1.00	1.00	1.00	1.00	1.00	1.00
PHF Volume:	31	412	217	140	495	115	201	582	33	219	328	165
Reduct Vol:	0	0	0	0	0	0	0	0	0	0	0	0
Reduced Vol:	31	412	217	140	495	115	201	582	33	219	328	165
PCE Adj:	1.00	1.00	1.00	1.00	1.00	1.00	1.00	1.00	1.00	1.00	1.00	1.00
MLF Adj:	1.00	1.00	1.00	1.00	1.00	1.00	1.00	1.00	1.00	1.00	1.00	1.00
FinalVolume:	31	412	217	140	495	115	201	582	33	219	328	165
Saturation Flow Module:												
Sat/Lane:	1600	1600	1600	1600	1600	1600	1600	1600	1600	1600	1600	1600
Adjustment:	1.00	1.00	1.00	1.00	1.00	1.00	1.00	1.00	1.00	1.00	1.00	1.00
Lanes:	1.00	2.00	1.00	1.00	1.62	0.38	2.00	1.89	0.11	2.00	2.00	1.00
Final Sat.:	1600	3200	1600	1600	2597	603	3200	3028	172	3200	3200	1600
Capacity Analysis Module:												
Vol/Sat:	0.02	0.13	0.14	0.09	0.19	0.19	0.06	0.19	0.19	0.07	0.10	0.10
Crit Moves:			****	****				****		****		

Newport Banning Ranch
Existing Conditions - ICU
AM Peak Hour

Level Of Service Computation Report
ICU 1(Loss as Cycle Length %) Method (Future Volume Alternative)

Intersection #30 Pomona Ave/19th St

Cycle (sec):	100	Critical Vol./Cap.(X):	0.466
Loss Time (sec):	0 (Y+R=4.0 sec)	Average Delay (sec/veh):	xxxxxx
Optimal Cycle:	43	Level Of Service:	A

Street Name:	Pomona Avenue						19th Street					
Approach:	North Bound			South Bound			East Bound			West Bound		
Movement:	L -	T -	R	L -	T -	R	L -	T -	R	L -	T -	R
Control:	Protected			Protected			Prot+Permit			Prot+Permit		
Rights:	Include			Include			Include			Include		
Min. Green:	0	0	0	0	0	0	0	0	0	0	0	0
Lanes:	1 0	0 1	0	1 0	0 1	0	1 0	1 1	0	1 0	1 1	0
Volume Module:												
Base Vol:	36	75	71	52	94	36	38	847	39	104	615	26
Growth Adj:	1.00	1.00	1.00	1.00	1.00	1.00	1.00	1.00	1.00	1.00	1.00	1.00
Initial Bse:	36	75	71	52	94	36	38	847	39	104	615	26
Added Vol:	0	0	0	0	0	0	0	0	0	0	0	0
PasserByVol:	0	0	0	0	0	0	0	0	0	0	0	0
Initial Fut:	36	75	71	52	94	36	38	847	39	104	615	26
User Adj:	1.00	1.00	1.00	1.00	1.00	1.00	1.00	1.00	1.00	1.00	1.00	1.00
PHF Adj:	1.00	1.00	1.00	1.00	1.00	1.00	1.00	1.00	1.00	1.00	1.00	1.00
PHF Volume:	36	75	71	52	94	36	38	847	39	104	615	26
Reduct Vol:	0	0	0	0	0	0	0	0	0	0	0	0
Reduced Vol:	36	75	71	52	94	36	38	847	39	104	615	26
PCE Adj:	1.00	1.00	1.00	1.00	1.00	1.00	1.00	1.00	1.00	1.00	1.00	1.00
MLF Adj:	1.00	1.00	1.00	1.00	1.00	1.00	1.00	1.00	1.00	1.00	1.00	1.00
FinalVolume:	36	75	71	52	94	36	38	847	39	104	615	26
Saturation Flow Module:												
Sat/Lane:	1600	1600	1600	1600	1600	1600	1600	1600	1600	1600	1600	1600
Adjustment:	1.00	1.00	1.00	1.00	1.00	1.00	1.00	1.00	1.00	1.00	1.00	1.00
Lanes:	1.00	0.51	0.49	1.00	0.72	0.28	1.00	1.91	0.09	1.00	1.92	0.08
Final Sat.:	1600	822	778	1600	1157	443	1600	3059	141	1600	3070	130
Capacity Analysis Module:												
Vol/Sat:	0.02	0.09	0.09	0.03	0.08	0.08	0.02	0.28	0.28	0.07	0.20	0.20
Crit Moves:		****		****				****		****		

Newport Banning Ranch
Existing Conditions - ICU
AM Peak Hour

Level Of Service Computation Report
ICU 1(Loss as Cycle Length %) Method (Future Volume Alternative)

Intersection #31 Anaheim Ave/19th St

Cycle (sec):	100	Critical Vol./Cap.(X):	0.467
Loss Time (sec):	0 (Y+R=4.0 sec)	Average Delay (sec/veh):	xxxxxx
Optimal Cycle:	35	Level Of Service:	A

Street Name:	Anaheim Avenue						19th Street					
Approach:	North Bound			South Bound			East Bound			West Bound		
Movement:	L - T - R			L - T - R			L - T - R			L - T - R		
Control:	Permitted			Permitted			Prot+Permit			Prot+Permit		
Rights:	Include			Include			Include			Include		
Min. Green:	0	0	0	0	0	0	0	0	0	0	0	0
Lanes:	1 0	0 1	0	1 0	0 1	0	1 0	1 1	0	1 0	2 0	1
Volume Module:												
Base Vol:	27	26	88	41	41	23	24	961	18	103	724	33
Growth Adj:	1.00	1.00	1.00	1.00	1.00	1.00	1.00	1.00	1.00	1.00	1.00	1.00
Initial Bse:	27	26	88	41	41	23	24	961	18	103	724	33
Added Vol:	0	0	0	0	0	0	0	0	0	0	0	0
PasserByVol:	0	0	0	0	0	0	0	0	0	0	0	0
Initial Fut:	27	26	88	41	41	23	24	961	18	103	724	33
User Adj:	1.00	1.00	1.00	1.00	1.00	1.00	1.00	1.00	1.00	1.00	1.00	1.00
PHF Adj:	1.00	1.00	1.00	1.00	1.00	1.00	1.00	1.00	1.00	1.00	1.00	1.00
PHF Volume:	27	26	88	41	41	23	24	961	18	103	724	33
Reduct Vol:	0	0	0	0	0	0	0	0	0	0	0	0
Reduced Vol:	27	26	88	41	41	23	24	961	18	103	724	33
PCE Adj:	1.00	1.00	1.00	1.00	1.00	1.00	1.00	1.00	1.00	1.00	1.00	1.00
MLF Adj:	1.00	1.00	1.00	1.00	1.00	1.00	1.00	1.00	1.00	1.00	1.00	1.00
FinalVolume:	27	26	88	41	41	23	24	961	18	103	724	33
Saturation Flow Module:												
Sat/Lane:	1600	1600	1600	1600	1600	1600	1600	1600	1600	1600	1600	1600
Adjustment:	1.00	1.00	1.00	1.00	1.00	1.00	1.00	1.00	1.00	1.00	1.00	1.00
Lanes:	1.00	0.23	0.77	1.00	0.64	0.36	1.00	1.96	0.04	1.00	2.00	1.00
Final Sat.:	1600	365	1235	1600	1025	575	1600	3141	59	1600	3200	1600
Capacity Analysis Module:												
Vol/Sat:	0.02	0.07	0.07	0.03	0.04	0.04	0.02	0.31	0.31	0.06	0.23	0.02
Crit Moves:		****		****				****		****		

Newport Banning Ranch
Existing Conditions - ICU
AM Peak Hour

Level Of Service Computation Report
ICU 1(Loss as Cycle Length %) Method (Future Volume Alternative)

Intersection #32 Park Ave/19th St

Cycle (sec):	100	Critical Vol./Cap.(X):	0.443
Loss Time (sec):	0 (Y+R=4.0 sec)	Average Delay (sec/veh):	xxxxxx
Optimal Cycle:	33	Level Of Service:	A

Street Name:	Park Avenue						19th St					
Approach:	North Bound			South Bound			East Bound			West Bound		
Movement:	L -	T -	R	L -	T -	R	L -	T -	R	L -	T -	R
Control:	Permitted			Permitted			Prot+Permit			Prot+Permit		
Rights:	Include			Include			Include			Include		
Min. Green:	0	0	0	0	0	0	0	0	0	0	0	0
Lanes:	2 0	0 0	1	0 0	0 0	0	1 0	2 0	1	1 0	3 0	0
Volume Module:												
Base Vol:	43	0	108	0	0	0	6	1012	60	94	800	0
Growth Adj:	1.00	1.00	1.00	1.00	1.00	1.00	1.00	1.00	1.00	1.00	1.00	1.00
Initial Bse:	43	0	108	0	0	0	6	1012	60	94	800	0
Added Vol:	0	0	0	0	0	0	0	0	0	0	0	0
PasserByVol:	0	0	0	0	0	0	0	0	0	0	0	0
Initial Fut:	43	0	108	0	0	0	6	1012	60	94	800	0
User Adj:	1.00	1.00	1.00	1.00	1.00	1.00	1.00	1.00	1.00	1.00	1.00	1.00
PHF Adj:	1.00	1.00	1.00	1.00	1.00	1.00	1.00	1.00	1.00	1.00	1.00	1.00
PHF Volume:	43	0	108	0	0	0	6	1012	60	94	800	0
Reduct Vol:	0	0	0	0	0	0	0	0	0	0	0	0
Reduced Vol:	43	0	108	0	0	0	6	1012	60	94	800	0
PCE Adj:	1.00	1.00	1.00	1.00	1.00	1.00	1.00	1.00	1.00	1.00	1.00	1.00
MLF Adj:	1.00	1.00	1.00	1.00	1.00	1.00	1.00	1.00	1.00	1.00	1.00	1.00
FinalVolume:	43	0	108	0	0	0	6	1012	60	94	800	0
Saturation Flow Module:												
Sat/Lane:	1600	1600	1600	1600	1600	1600	1600	1600	1600	1600	1600	1600
Adjustment:	1.00	1.00	1.00	1.00	1.00	1.00	1.00	1.00	1.00	1.00	1.00	1.00
Lanes:	2.00	0.00	1.00	0.00	0.00	0.00	1.00	2.00	1.00	1.00	3.00	0.00
Final Sat.:	3200	0	1600	0	0	0	1600	3200	1600	1600	4800	0
Capacity Analysis Module:												
Vol/Sat:	0.01	0.00	0.07	0.00	0.00	0.00	0.00	0.32	0.04	0.06	0.17	0.00
Crit Moves:			****					****		****		

Newport Banning Ranch
Existing Conditions - ICU
AM Peak Hour

Level Of Service Computation Report
ICU 1(Loss as Cycle Length %) Method (Future Volume Alternative)

Intersection #33 Harbor Blvd/19th St

Cycle (sec):	100	Critical Vol./Cap.(X):	0.397
Loss Time (sec):	0 (Y+R=4.0 sec)	Average Delay (sec/veh):	xxxxxx
Optimal Cycle:	38	Level Of Service:	A

Street Name:	Harbor Boulevard						19th Street					
Approach:	North Bound			South Bound			East Bound			West Bound		
Movement:	L - T - R			L - T - R			L - T - R			L - T - R		
Control:	Protected			Protected			Protected			Protected		
Rights:	Include			Include			Include			Include		
Min. Green:	0	0	0	0	0	0	0	0	0	0	0	0
Lanes:	1 0 2	1 0		1 0 2	0 1		2 0 2	1 0		1 0 3	0 1	
Volume Module:												
Base Vol:	18	287	14	141	425	260	216	928	37	36	630	161
Growth Adj:	1.00	1.00	1.00	1.00	1.00	1.00	1.00	1.00	1.00	1.00	1.00	1.00
Initial Bse:	18	287	14	141	425	260	216	928	37	36	630	161
Added Vol:	0	0	0	0	0	0	0	0	0	0	0	0
PasserByVol:	0	0	0	0	0	0	0	0	0	0	0	0
Initial Fut:	18	287	14	141	425	260	216	928	37	36	630	161
User Adj:	1.00	1.00	1.00	1.00	1.00	1.00	1.00	1.00	1.00	1.00	1.00	1.00
PHF Adj:	1.00	1.00	1.00	1.00	1.00	1.00	1.00	1.00	1.00	1.00	1.00	1.00
PHF Volume:	18	287	14	141	425	260	216	928	37	36	630	161
Reduct Vol:	0	0	0	0	0	0	0	0	0	0	0	0
Reduced Vol:	18	287	14	141	425	260	216	928	37	36	630	161
PCE Adj:	1.00	1.00	1.00	1.00	1.00	1.00	1.00	1.00	1.00	1.00	1.00	1.00
MLF Adj:	1.00	1.00	1.00	1.00	1.00	1.00	1.00	1.00	1.00	1.00	1.00	1.00
FinalVolume:	18	287	14	141	425	260	216	928	37	36	630	161
Saturation Flow Module:												
Sat/Lane:	1600	1600	1600	1600	1600	1600	1600	1600	1600	1600	1600	1600
Adjustment:	1.00	1.00	1.00	1.00	1.00	1.00	1.00	1.00	1.00	1.00	1.00	1.00
Lanes:	1.00	2.86	0.14	1.00	2.00	1.00	2.00	2.88	0.12	1.00	3.00	1.00
Final Sat.:	1600	4577	223	1600	3200	1600	3200	4616	184	1600	4800	1600
Capacity Analysis Module:												
Vol/Sat:	0.01	0.06	0.06	0.09	0.13	0.16	0.07	0.20	0.20	0.02	0.13	0.10
Crit Moves:	****					****		****		****		

Newport Banning Ranch
Existing Conditions - ICU
AM Peak Hour

Level Of Service Computation Report
ICU 1(Loss as Cycle Length %) Method (Future Volume Alternative)

Intersection #34 Newport Blvd/19th St

Cycle (sec):	120	Critical Vol./Cap.(X):	0.796
Loss Time (sec):	0 (Y+R=4.0 sec)	Average Delay (sec/veh):	xxxxxx
Optimal Cycle:	112	Level Of Service:	C

Street Name:	Newport Boulevard						19th Street					
Approach:	North Bound			South Bound			East Bound			West Bound		
Movement:	L - T - R			L - T - R			L - T - R			L - T - R		
Control:	Protected			Protected			Split Phase			Split Phase		
Rights:	Include			Include			Include			Include		
Min. Green:	0	0	0	0	0	0	0	0	0	0	0	0
Lanes:	1 0	3 1	0	1 0	3 1	1	2 1	1 0	1	1 0	2 1	1
Volume Module:												
Base Vol:	31	2709	9	181	2440	486	886	183	14	21	162	237
Growth Adj:	1.00	1.00	1.00	1.00	1.00	1.00	1.00	1.00	1.00	1.00	1.00	1.00
Initial Bse:	31	2709	9	181	2440	486	886	183	14	21	162	237
Added Vol:	0	0	0	0	0	0	0	0	0	0	0	0
PasserByVol:	0	0	0	0	0	0	0	0	0	0	0	0
Initial Fut:	31	2709	9	181	2440	486	886	183	14	21	162	237
User Adj:	1.00	1.00	1.00	1.00	1.00	1.00	1.00	1.00	1.00	1.00	1.00	1.00
PHF Adj:	1.00	1.00	1.00	1.00	1.00	1.00	1.00	1.00	1.00	1.00	1.00	1.00
PHF Volume:	31	2709	9	181	2440	486	886	183	14	21	162	237
Reduct Vol:	0	0	0	0	0	0	0	0	0	0	0	0
Reduced Vol:	31	2709	9	181	2440	486	886	183	14	21	162	237
PCE Adj:	1.00	1.00	1.00	1.00	1.00	1.00	1.00	1.00	1.00	1.00	1.00	1.00
MLF Adj:	1.00	1.00	1.00	1.00	1.00	1.00	1.00	1.00	1.00	1.00	1.00	1.00
FinalVolume:	31	2709	9	181	2440	486	886	183	14	21	162	237
Saturation Flow Module:												
Sat/Lane:	1600	1600	1600	1600	1600	1600	1600	1600	1600	1600	1600	1600
Adjustment:	1.00	1.00	1.00	1.00	1.00	1.00	1.00	1.00	1.00	1.00	1.00	1.00
Lanes:	1.00	3.99	0.01	1.00	4.00	1.00	3.00	1.00	1.00	1.00	2.00	2.00
Final Sat.:	1600	6379	21	1600	6400	1600	4800	1600	1600	1600	3200	3200
Capacity Analysis Module:												
Vol/Sat:	0.02	0.42	0.42	0.11	0.38	0.30	0.18	0.11	0.01	0.01	0.05	0.07
Crit Moves:		****		****			****					****

Newport Banning Ranch
Existing Conditions - ICU
AM Peak Hour

Level Of Service Computation Report
ICU 1(Loss as Cycle Length %) Method (Future Volume Alternative)

Intersection #35 Newport Blvd/Broadway

Cycle (sec):	120	Critical Vol./Cap.(X):	0.577
Loss Time (sec):	0 (Y+R=4.0 sec)	Average Delay (sec/veh):	xxxxxx
Optimal Cycle:	44	Level Of Service:	A

Street Name:	Newport Boulevard						Broadway					
Approach:	North Bound			South Bound			East Bound			West Bound		
Movement:	L -	T -	R	L -	T -	R	L -	T -	R	L -	T -	R
Control:	Protected			Protected			Permitted			Permitted		
Rights:	Include			Include			Include			Include		
Min. Green:	0	0	0	0	0	0	0	0	0	0	0	0
Lanes:	1 0	3 1	0	1 0	3 0	1	0 1	0 0	1	1 0	0 1	0
Volume Module:												
Base Vol:	4	2678	8	60	2396	7	6	9	3	38	12	102
Growth Adj:	1.00	1.00	1.00	1.00	1.00	1.00	1.00	1.00	1.00	1.00	1.00	1.00
Initial Bse:	4	2678	8	60	2396	7	6	9	3	38	12	102
Added Vol:	0	0	0	0	0	0	0	0	0	0	0	0
PasserByVol:	0	0	0	0	0	0	0	0	0	0	0	0
Initial Fut:	4	2678	8	60	2396	7	6	9	3	38	12	102
User Adj:	1.00	1.00	1.00	1.00	1.00	1.00	1.00	1.00	1.00	1.00	1.00	1.00
PHF Adj:	1.00	1.00	1.00	1.00	1.00	1.00	1.00	1.00	1.00	1.00	1.00	1.00
PHF Volume:	4	2678	8	60	2396	7	6	9	3	38	12	102
Reduct Vol:	0	0	0	0	0	0	0	0	0	0	0	0
Reduced Vol:	4	2678	8	60	2396	7	6	9	3	38	12	102
PCE Adj:	1.00	1.00	1.00	1.00	1.00	1.00	1.00	1.00	1.00	1.00	1.00	1.00
MLF Adj:	1.00	1.00	1.00	1.00	1.00	1.00	1.00	1.00	1.00	1.00	1.00	1.00
FinalVolume:	4	2678	8	60	2396	7	6	9	3	38	12	102
Saturation Flow Module:												
Sat/Lane:	1600	1600	1600	1600	1600	1600	1600	1600	1600	1600	1600	1600
Adjustment:	1.00	1.00	1.00	1.00	1.00	1.00	1.00	1.00	1.00	1.00	1.00	1.00
Lanes:	1.00	3.99	0.01	1.00	3.00	1.00	0.40	0.60	1.00	1.00	0.11	0.89
Final Sat.:	1600	6381	19	1600	4800	1600	640	960	1600	1600	168	1432
Capacity Analysis Module:												
Vol/Sat:	0.00	0.42	0.42	0.04	0.50	0.00	0.00	0.01	0.00	0.02	0.07	0.07
Crit Moves:	****				****		****				****	

Newport Banning Ranch
Existing Conditions - ICU
AM Peak Hour

Level Of Service Computation Report
ICU 1(Loss as Cycle Length %) Method (Future Volume Alternative)

Intersection #36 Newport Blvd/Harbor Blvd

Cycle (sec):	120	Critical Vol./Cap.(X):	0.695
Loss Time (sec):	0 (Y+R=4.0 sec)	Average Delay (sec/veh):	xxxxxx
Optimal Cycle:	75	Level Of Service:	B

Street Name:	Newport Boulevard						Harbor Boulevard					
Approach:	North Bound			South Bound			East Bound			West Bound		
Movement:	L -	T -	R	L -	T -	R	L -	T -	R	L -	T -	R
Control:	Protected			Protected			Protected			Protected		
Rights:	Include			Include			Ovl			Include		
Min. Green:	0	0	0	0	0	0	0	0	0	0	0	0
Lanes:	2 0	4 0	0	0 0	2 1	0	1 0	0 0	2	0 0	0 0	0
Volume Module:												
Base Vol:	317	2653	0	0	2559	49	26	0	486	0	0	0
Growth Adj:	1.00	1.00	1.00	1.00	1.00	1.00	1.00	1.00	1.00	1.00	1.00	1.00
Initial Bse:	317	2653	0	0	2559	49	26	0	486	0	0	0
Added Vol:	0	0	0	0	0	0	0	0	0	0	0	0
PasserByVol:	0	0	0	0	0	0	0	0	0	0	0	0
Initial Fut:	317	2653	0	0	2559	49	26	0	486	0	0	0
User Adj:	1.00	1.00	1.00	1.00	1.00	1.00	1.00	1.00	1.00	1.00	1.00	1.00
PHF Adj:	1.00	1.00	1.00	1.00	1.00	1.00	1.00	1.00	1.00	1.00	1.00	1.00
PHF Volume:	317	2653	0	0	2559	49	26	0	486	0	0	0
Reduct Vol:	0	0	0	0	0	0	0	0	0	0	0	0
Reduced Vol:	317	2653	0	0	2559	49	26	0	486	0	0	0
PCE Adj:	1.00	1.00	1.00	1.00	1.00	1.00	1.00	1.00	1.00	1.00	1.00	1.00
MLF Adj:	1.00	1.00	1.00	1.00	1.00	1.00	1.00	1.00	1.00	1.00	1.00	1.00
FinalVolume:	317	2653	0	0	2559	49	26	0	486	0	0	0
OvlAdjVol:									169			
Saturation Flow Module:												
Sat/Lane:	1600	1600	1600	1600	1600	1600	1600	1600	1600	1600	1600	1600
Adjustment:	1.00	1.00	1.00	1.00	1.00	1.00	1.00	1.00	1.00	1.00	1.00	1.00
Lanes:	2.00	4.00	0.00	0.00	2.94	0.06	1.00	0.00	2.00	0.00	0.00	0.00
Final Sat.:	3200	6400	0	0	4710	90	1600	0	3200	0	0	0
Capacity Analysis Module:												
Vol/Sat:	0.10	0.41	0.00	0.00	0.54	0.54	0.02	0.00	0.15	0.00	0.00	0.00
OvlAdjV/S:									0.05			
Crit Moves:	****				****				****			

Newport Banning Ranch
Existing Conditions - ICU
AM Peak Hour

Level Of Service Computation Report
ICU 1(Loss as Cycle Length %) Method (Future Volume Alternative)

Intersection #37 Newport Blvd/18th St (Rochester St)

Cycle (sec):	120	Critical Vol./Cap.(X):	0.729
Loss Time (sec):	0 (Y+R=4.0 sec)	Average Delay (sec/veh):	xxxxxx
Optimal Cycle:	84	Level Of Service:	C

Street Name:	Newport Boulevard						18th Street (Rochester Street)					
Approach:	North Bound			South Bound			East Bound			West Bound		
Movement:	L - T - R			L - T - R			L - T - R			L - T - R		
Control:	Protected			Protected			Split Phase			Split Phase		
Rights:	Include			Include			Include			Include		
Min. Green:	0	0	0	0	0	0	0	0	0	0	0	0
Lanes:	1 0 3 1 0			1 0 3 0 1			2 0 1 0 1			1 0 0 1 0		
Volume Module:												
Base Vol:	64	2852	7	85	2743	165	179	81	26	7	68	30
Growth Adj:	1.00	1.00	1.00	1.00	1.00	1.00	1.00	1.00	1.00	1.00	1.00	1.00
Initial Bse:	64	2852	7	85	2743	165	179	81	26	7	68	30
Added Vol:	0	0	0	0	0	0	0	0	0	0	0	0
PasserByVol:	0	0	0	0	0	0	0	0	0	0	0	0
Initial Fut:	64	2852	7	85	2743	165	179	81	26	7	68	30
User Adj:	1.00	1.00	1.00	1.00	1.00	1.00	1.00	1.00	1.00	1.00	1.00	1.00
PHF Adj:	1.00	1.00	1.00	1.00	1.00	1.00	1.00	1.00	1.00	1.00	1.00	1.00
PHF Volume:	64	2852	7	85	2743	165	179	81	26	7	68	30
Reduct Vol:	0	0	0	0	0	0	0	0	0	0	0	0
Reduced Vol:	64	2852	7	85	2743	165	179	81	26	7	68	30
PCE Adj:	1.00	1.00	1.00	1.00	1.00	1.00	1.00	1.00	1.00	1.00	1.00	1.00
MLF Adj:	1.00	1.00	1.00	1.00	1.00	1.00	1.00	1.00	1.00	1.00	1.00	1.00
FinalVolume:	64	2852	7	85	2743	165	179	81	26	7	68	30
Saturation Flow Module:												
Sat/Lane:	1600	1600	1600	1600	1600	1600	1600	1600	1600	1600	1600	1600
Adjustment:	1.00	1.00	1.00	1.00	1.00	1.00	1.00	1.00	1.00	1.00	1.00	1.00
Lanes:	1.00	3.99	0.01	1.00	3.00	1.00	2.00	1.00	1.00	1.00	0.69	0.31
Final Sat.:	1600	6384	16	1600	4800	1600	3200	1600	1600	1600	1110	490
Capacity Analysis Module:												
Vol/Sat:	0.04	0.45	0.45	0.05	0.57	0.10	0.06	0.05	0.02	0.00	0.06	0.06
Crit Moves:	****				****		****				****	

Newport Banning Ranch
Existing Conditions - ICU
AM Peak Hour

Level Of Service Computation Report
ICU 1(Loss as Cycle Length %) Method (Future Volume Alternative)

Intersection #38 Placentia Ave/18th St

Cycle (sec):	100	Critical Vol./Cap.(X):	0.440
Loss Time (sec):	0 (Y+R=4.0 sec)	Average Delay (sec/veh):	xxxxxx
Optimal Cycle:	33	Level Of Service:	A

Street Name:	Placentia Avenue						18th Street					
Approach:	North Bound			South Bound			East Bound			West Bound		
Movement:	L - T - R			L - T - R			L - T - R			L - T - R		
Control:	Protected			Protected			Permitted			Permitted		
Rights:	Include			Include			Include			Include		
Min. Green:	0	0	0	0	0	0	0	0	0	0	0	0
Lanes:	1 0	1 1	0	1 0	1 1	0	1 0	0 1	0	1 0	0 1	0
Volume Module:												
Base Vol:	25	488	23	38	725	106	46	120	27	41	173	45
Growth Adj:	1.00	1.00	1.00	1.00	1.00	1.00	1.00	1.00	1.00	1.00	1.00	1.00
Initial Bse:	25	488	23	38	725	106	46	120	27	41	173	45
Added Vol:	0	0	0	0	0	0	0	0	0	0	0	0
PasserByVol:	0	0	0	0	0	0	0	0	0	0	0	0
Initial Fut:	25	488	23	38	725	106	46	120	27	41	173	45
User Adj:	1.00	1.00	1.00	1.00	1.00	1.00	1.00	1.00	1.00	1.00	1.00	1.00
PHF Adj:	1.00	1.00	1.00	1.00	1.00	1.00	1.00	1.00	1.00	1.00	1.00	1.00
PHF Volume:	25	488	23	38	725	106	46	120	27	41	173	45
Reduct Vol:	0	0	0	0	0	0	0	0	0	0	0	0
Reduced Vol:	25	488	23	38	725	106	46	120	27	41	173	45
PCE Adj:	1.00	1.00	1.00	1.00	1.00	1.00	1.00	1.00	1.00	1.00	1.00	1.00
MLF Adj:	1.00	1.00	1.00	1.00	1.00	1.00	1.00	1.00	1.00	1.00	1.00	1.00
FinalVolume:	25	488	23	38	725	106	46	120	27	41	173	45
Saturation Flow Module:												
Sat/Lane:	1600	1600	1600	1600	1600	1600	1600	1600	1600	1600	1600	1600
Adjustment:	1.00	1.00	1.00	1.00	1.00	1.00	1.00	1.00	1.00	1.00	1.00	1.00
Lanes:	1.00	1.91	0.09	1.00	1.74	0.26	1.00	0.82	0.18	1.00	0.79	0.21
Final Sat.:	1600	3056	144	1600	2792	408	1600	1306	294	1600	1270	330
Capacity Analysis Module:												
Vol/Sat:	0.02	0.16	0.16	0.02	0.26	0.26	0.03	0.09	0.09	0.03	0.14	0.14
Crit Moves:	****				****		****				****	

Newport Banning Ranch
Existing Conditions - ICU
AM Peak Hour

Level Of Service Computation Report
2000 HCM 4-Way Stop Method (Future Volume Alternative)

Intersection #39 Whittier Ave/17th St

Cycle (sec):	100	Critical Vol./Cap.(X):	0.109
Loss Time (sec):	0 (Y+R=4.0 sec)	Average Delay (sec/veh):	7.4
Optimal Cycle:	0	Level Of Service:	A

Street Name:	Whittier Avenue						17th St					
Approach:	North Bound			South Bound			East Bound			West Bound		
Movement:	L -	T -	R	L -	T -	R	L -	T -	R	L -	T -	R
Control:	Stop Sign			Stop Sign			Stop Sign			Stop Sign		
Rights:	Include			Include			Include			Include		
Min. Green:	0	0	0	0	0	0	0	0	0	0	0	0
Lanes:	0 0	0 1	0	0 0	1! 0	0	0 0	1! 0	0	0 0	1! 0	0
Volume Module:												
Base Vol:	0	35	2	24	23	53	56	2	5	1	0	24
Growth Adj:	1.00	1.00	1.00	1.00	1.00	1.00	1.00	1.00	1.00	1.00	1.00	1.00
Initial Bse:	0	35	2	24	23	53	56	2	5	1	0	24
Added Vol:	0	0	0	0	0	0	0	0	0	0	0	0
PasserByVol:	0	0	0	0	0	0	0	0	0	0	0	0
Initial Fut:	0	35	2	24	23	53	56	2	5	1	0	24
User Adj:	1.00	1.00	1.00	1.00	1.00	1.00	1.00	1.00	1.00	1.00	1.00	1.00
PHF Adj:	1.00	1.00	1.00	1.00	1.00	1.00	1.00	1.00	1.00	1.00	1.00	1.00
PHF Volume:	0	35	2	24	23	53	56	2	5	1	0	24
Reduct Vol:	0	0	0	0	0	0	0	0	0	0	0	0
Reduced Vol:	0	35	2	24	23	53	56	2	5	1	0	24
PCE Adj:	1.00	1.00	1.00	1.00	1.00	1.00	1.00	1.00	1.00	1.00	1.00	1.00
MLF Adj:	1.00	1.00	1.00	1.00	1.00	1.00	1.00	1.00	1.00	1.00	1.00	1.00
FinalVolume:	0	35	2	24	23	53	56	2	5	1	0	24
Saturation Flow Module:												
Adjustment:	1.00	1.00	1.00	1.00	1.00	1.00	1.00	1.00	1.00	1.00	1.00	1.00
Lanes:	0.00	0.95	0.05	0.24	0.23	0.53	0.89	0.03	0.08	0.04	0.00	0.96
Final Sat.:	0	802	46	220	211	485	719	26	64	38	0	908
Capacity Analysis Module:												
Vol/Sat:	xxxx	0.04	0.04	0.11	0.11	0.11	0.08	0.08	0.08	0.03	xxxx	0.03
Crit Moves:		****			****				****	****		
Delay/Veh:	0.0	7.3	7.3	7.3	7.3	7.3	7.7	7.7	7.7	6.8	0.0	6.8
Delay Adj:	1.00	1.00	1.00	1.00	1.00	1.00	1.00	1.00	1.00	1.00	1.00	1.00
AdjDel/Veh:	0.0	7.3	7.3	7.3	7.3	7.3	7.7	7.7	7.7	6.8	0.0	6.8
LOS by Move:	*	A	A	A	A	A	A	A	A	A	*	A
ApproachDel:		7.3			7.3			7.7			6.8	
Delay Adj:		1.00			1.00			1.00			1.00	
ApprAdjDel:		7.3			7.3			7.7			6.8	
LOS by Appr:		A			A			A			A	
AllWayAvgQ:	0.0	0.0	0.0	0.1	0.1	0.1	0.1	0.1	0.1	0.0	0.0	0.0

Newport Banning Ranch
Existing Conditions - ICU
AM Peak Hour

Note: Queue reported is the number of cars per lane.

Newport Banning Ranch
Existing Conditions - ICU
AM Peak Hour

Level Of Service Computation Report
2000 HCM 4-Way Stop Method (Future Volume Alternative)

Intersection #40 Monrovia Ave/17th St

Cycle (sec): 100 | Critical Vol./Cap.(X): 0.355
Loss Time (sec): 0 (Y+R=4.0 sec) | Average Delay (sec/veh): 9.5
Optimal Cycle: 0 | Level Of Service: A

Street Name:	Monrovia Avenue						17th Street					
Approach:	North Bound			South Bound			East Bound			West Bound		
Movement:	L - T - R			L - T - R			L - T - R			L - T - R		
Control:	Stop Sign			Stop Sign			Stop Sign			Stop Sign		
Rights:	Include			Include			Include			Include		
Min. Green:	0	0	0	0	0	0	0	0	0	0	0	0
Lanes:	0 0	1! 0	0	0 0	1! 0	0	0 0	1! 0	0	0 0	1! 0	0
Volume Module:												
Base Vol:	36	88	63	26	86	12	14	75	32	67	135	56
Growth Adj:	1.00	1.00	1.00	1.00	1.00	1.00	1.00	1.00	1.00	1.00	1.00	1.00
Initial Bse:	36	88	63	26	86	12	14	75	32	67	135	56
Added Vol:	0	0	0	0	0	0	0	0	0	0	0	0
PasserByVol:	0	0	0	0	0	0	0	0	0	0	0	0
Initial Fut:	36	88	63	26	86	12	14	75	32	67	135	56
User Adj:	1.00	1.00	1.00	1.00	1.00	1.00	1.00	1.00	1.00	1.00	1.00	1.00
PHF Adj:	1.00	1.00	1.00	1.00	1.00	1.00	1.00	1.00	1.00	1.00	1.00	1.00
PHF Volume:	36	88	63	26	86	12	14	75	32	67	135	56
Reduct Vol:	0	0	0	0	0	0	0	0	0	0	0	0
Reduced Vol:	36	88	63	26	86	12	14	75	32	67	135	56
PCE Adj:	1.00	1.00	1.00	1.00	1.00	1.00	1.00	1.00	1.00	1.00	1.00	1.00
MLF Adj:	1.00	1.00	1.00	1.00	1.00	1.00	1.00	1.00	1.00	1.00	1.00	1.00
FinalVolume:	36	88	63	26	86	12	14	75	32	67	135	56
Saturation Flow Module:												
Adjustment:	1.00	1.00	1.00	1.00	1.00	1.00	1.00	1.00	1.00	1.00	1.00	1.00
Lanes:	0.19	0.47	0.34	0.21	0.69	0.10	0.12	0.62	0.26	0.26	0.52	0.22
Final Sat.:	136	332	237	140	462	65	80	430	184	189	380	158
Capacity Analysis Module:												
Vol/Sat:	0.27	0.27	0.27	0.19	0.19	0.19	0.17	0.17	0.17	0.36	0.36	0.36
Crit Moves:	****				****			****			****	
Delay/Veh:	9.4	9.4	9.4	9.1	9.1	9.1	8.8	8.8	8.8	10.1	10.1	10.1
Delay Adj:	1.00	1.00	1.00	1.00	1.00	1.00	1.00	1.00	1.00	1.00	1.00	1.00
AdjDel/Veh:	9.4	9.4	9.4	9.1	9.1	9.1	8.8	8.8	8.8	10.1	10.1	10.1
LOS by Move:	A	A	A	A	A	A	A	A	A	B	B	B
ApproachDel:	9.4			9.1			8.8			10.1		
Delay Adj:	1.00			1.00			1.00			1.00		
ApprAdjDel:	9.4			9.1			8.8			10.1		
LOS by Appr:	A			A			A			B		
AllWayAvgQ:	0.3	0.3	0.3	0.2	0.2	0.2	0.2	0.2	0.2	0.5	0.5	0.5

Newport Banning Ranch
Existing Conditions - ICU
AM Peak Hour

Note: Queue reported is the number of cars per lane.

Newport Banning Ranch
Existing Conditions - ICU
AM Peak Hour

Level Of Service Computation Report
ICU 1(Loss as Cycle Length %) Method (Future Volume Alternative)

Intersection #41 Placentia Ave/17th St

Cycle (sec):	100	Critical Vol./Cap.(X):	0.406
Loss Time (sec):	0 (Y+R=4.0 sec)	Average Delay (sec/veh):	xxxxxx
Optimal Cycle:	24	Level Of Service:	A

Street Name:	Placentia Avenue						17th St					
Approach:	North Bound			South Bound			East Bound			West Bound		
Movement:	L - T - R			L - T - R			L - T - R			L - T - R		
Control:	Permitted			Permitted			Permitted			Permitted		
Rights:	Include			Include			Include			Include		
Min. Green:	0	0	0	0	0	0	0	0	0	0	0	0
Lanes:	1 0	1 1	0	1 0	1 1	0	1 0	0 1	0	1 0	0 1	0
Volume Module:												
Base Vol:	89	378	59	166	537	77	12	141	31	44	162	80
Growth Adj:	1.00	1.00	1.00	1.00	1.00	1.00	1.00	1.00	1.00	1.00	1.00	1.00
Initial Bse:	89	378	59	166	537	77	12	141	31	44	162	80
Added Vol:	0	0	0	0	0	0	0	0	0	0	0	0
PasserByVol:	0	0	0	0	0	0	0	0	0	0	0	0
Initial Fut:	89	378	59	166	537	77	12	141	31	44	162	80
User Adj:	1.00	1.00	1.00	1.00	1.00	1.00	1.00	1.00	1.00	1.00	1.00	1.00
PHF Adj:	1.00	1.00	1.00	1.00	1.00	1.00	1.00	1.00	1.00	1.00	1.00	1.00
PHF Volume:	89	378	59	166	537	77	12	141	31	44	162	80
Reduct Vol:	0	0	0	0	0	0	0	0	0	0	0	0
Reduced Vol:	89	378	59	166	537	77	12	141	31	44	162	80
PCE Adj:	1.00	1.00	1.00	1.00	1.00	1.00	1.00	1.00	1.00	1.00	1.00	1.00
MLF Adj:	1.00	1.00	1.00	1.00	1.00	1.00	1.00	1.00	1.00	1.00	1.00	1.00
FinalVolume:	89	378	59	166	537	77	12	141	31	44	162	80
Saturation Flow Module:												
Sat/Lane:	1600	1600	1600	1600	1600	1600	1600	1600	1600	1600	1600	1600
Adjustment:	1.00	1.00	1.00	1.00	1.00	1.00	1.00	1.00	1.00	1.00	1.00	1.00
Lanes:	1.00	1.73	0.27	1.00	1.75	0.25	1.00	0.82	0.18	1.00	0.67	0.33
Final Sat.:	1600	2768	432	1600	2799	401	1600	1312	288	1600	1071	529
Capacity Analysis Module:												
Vol/Sat:	0.06	0.14	0.14	0.10	0.19	0.19	0.01	0.11	0.11	0.03	0.15	0.15
Crit Moves:	****				****		****				****	

Newport Banning Ranch
Existing Conditions - ICU
AM Peak Hour

Level Of Service Computation Report
2000 HCM 4-Way Stop Method (Future Volume Alternative)

Intersection #42 Pomona Ave/17th St

Cycle (sec):	100	Critical Vol./Cap.(X):	0.567
Loss Time (sec):	0 (Y+R=4.0 sec)	Average Delay (sec/veh):	13.4
Optimal Cycle:	0	Level Of Service:	B

Street Name:	Pomona Avenue						17th Street					
Approach:	North Bound			South Bound			East Bound			West Bound		
Movement:	L - T - R			L - T - R			L - T - R			L - T - R		
Control:	Stop Sign			Stop Sign			Stop Sign			Stop Sign		
Rights:	Include			Include			Include			Include		
Min. Green:	0	0	0	0	0	0	0	0	0	0	0	0
Lanes:	0 0	1! 0	0	0 0	1! 0	0	1 0	0 1	0	1 0	1 0	1
Volume Module:												
Base Vol:	6	40	19	101	116	59	12	303	29	60	273	53
Growth Adj:	1.00	1.00	1.00	1.00	1.00	1.00	1.00	1.00	1.00	1.00	1.00	1.00
Initial Bse:	6	40	19	101	116	59	12	303	29	60	273	53
Added Vol:	0	0	0	0	0	0	0	0	0	0	0	0
PasserByVol:	0	0	0	0	0	0	0	0	0	0	0	0
Initial Fut:	6	40	19	101	116	59	12	303	29	60	273	53
User Adj:	1.00	1.00	1.00	1.00	1.00	1.00	1.00	1.00	1.00	1.00	1.00	1.00
PHF Adj:	1.00	1.00	1.00	1.00	1.00	1.00	1.00	1.00	1.00	1.00	1.00	1.00
PHF Volume:	6	40	19	101	116	59	12	303	29	60	273	53
Reduct Vol:	0	0	0	0	0	0	0	0	0	0	0	0
Reduced Vol:	6	40	19	101	116	59	12	303	29	60	273	53
PCE Adj:	1.00	1.00	1.00	1.00	1.00	1.00	1.00	1.00	1.00	1.00	1.00	1.00
MLF Adj:	1.00	1.00	1.00	1.00	1.00	1.00	1.00	1.00	1.00	1.00	1.00	1.00
FinalVolume:	6	40	19	101	116	59	12	303	29	60	273	53
Saturation Flow Module:												
Adjustment:	1.00	1.00	1.00	1.00	1.00	1.00	1.00	1.00	1.00	1.00	1.00	1.00
Lanes:	0.09	0.62	0.29	0.37	0.42	0.21	1.00	0.91	0.09	1.00	1.00	1.00
Final Sat.:	47	313	149	213	245	125	534	535	51	537	583	654
Capacity Analysis Module:												
Vol/Sat:	0.13	0.13	0.13	0.47	0.47	0.47	0.02	0.57	0.57	0.11	0.47	0.08
Crit Moves:		****			****			****			****	
Delay/Veh:	10.0	10.0	10.0	13.4	13.4	13.4	9.4	15.6	15.6	9.9	13.5	8.4
Delay Adj:	1.00	1.00	1.00	1.00	1.00	1.00	1.00	1.00	1.00	1.00	1.00	1.00
AdjDel/Veh:	10.0	10.0	10.0	13.4	13.4	13.4	9.4	15.6	15.6	9.9	13.5	8.4
LOS by Move:	A	A	A	B	B	B	A	C	C	A	B	A
ApproachDel:		10.0			13.4			15.4			12.3	
Delay Adj:		1.00			1.00			1.00			1.00	
ApprAdjDel:		10.0			13.4			15.4			12.3	
LOS by Appr:		A			B			C			B	
AllWayAvgQ:	0.1	0.1	0.1	0.7	0.7	0.7	0.0	1.1	1.1	0.1	0.8	0.1

Newport Banning Ranch
Existing Conditions - ICU
AM Peak Hour

Note: Queue reported is the number of cars per lane.

Newport Banning Ranch
Existing Conditions - ICU
AM Peak Hour

Level Of Service Computation Report
ICU 1(Loss as Cycle Length %) Method (Future Volume Alternative)

Intersection #43 Superior Ave/17th St

Cycle (sec):	100	Critical Vol./Cap.(X):	0.647
Loss Time (sec):	0 (Y+R=4.0 sec)	Average Delay (sec/veh):	xxxxxx
Optimal Cycle:	65	Level Of Service:	B

Street Name:	Superior Avenue						17th Street					
Approach:	North Bound			South Bound			East Bound			West Bound		
Movement:	L - T - R			L - T - R			L - T - R			L - T - R		
Control:	Prot+Permit			Prot+Permit			Prot+Permit			Prot+Permit		
Rights:	Include			Include			Include			Include		
Min. Green:	0	0	0	0	0	0	0	0	0	0	0	0
Lanes:	1 0	0 1	1	1 0	1 1	0	1 0	1 1	0	1 0	1 1	0
Volume Module:												
Base Vol:	39	123	703	49	213	39	8	386	35	363	366	48
Growth Adj:	1.00	1.00	1.00	1.00	1.00	1.00	1.00	1.00	1.00	1.00	1.00	1.00
Initial Bse:	39	123	703	49	213	39	8	386	35	363	366	48
Added Vol:	0	0	0	0	0	0	0	0	0	0	0	0
PasserByVol:	0	0	0	0	0	0	0	0	0	0	0	0
Initial Fut:	39	123	703	49	213	39	8	386	35	363	366	48
User Adj:	1.00	1.00	1.00	1.00	1.00	1.00	1.00	1.00	1.00	1.00	1.00	1.00
PHF Adj:	1.00	1.00	1.00	1.00	1.00	1.00	1.00	1.00	1.00	1.00	1.00	1.00
PHF Volume:	39	123	703	49	213	39	8	386	35	363	366	48
Reduct Vol:	0	0	0	0	0	0	0	0	0	0	0	0
Reduced Vol:	39	123	703	49	213	39	8	386	35	363	366	48
PCE Adj:	1.00	1.00	1.00	1.00	1.00	1.00	1.00	1.00	1.00	1.00	1.00	1.00
MLF Adj:	1.00	1.00	1.00	1.00	1.00	1.00	1.00	1.00	1.00	1.00	1.00	1.00
FinalVolume:	39	123	703	49	213	39	8	386	35	363	366	48
Saturation Flow Module:												
Sat/Lane:	1600	1600	1600	1600	1600	1600	1600	1600	1600	1600	1600	1600
Adjustment:	1.00	1.00	1.00	1.00	1.00	1.00	1.00	1.00	1.00	1.00	1.00	1.00
Lanes:	1.00	0.30	1.70	1.00	1.69	0.31	1.00	1.83	0.17	1.00	1.77	0.23
Final Sat.:	1600	477	2723	1600	2705	495	1600	2934	266	1600	2829	371
Capacity Analysis Module:												
Vol/Sat:	0.02	0.26	0.26	0.03	0.08	0.08	0.01	0.13	0.13	0.23	0.13	0.13
Crit Moves:		****		****				****		****		

Newport Banning Ranch
Existing Conditions - ICU
AM Peak Hour

Level Of Service Computation Report
ICU 1(Loss as Cycle Length %) Method (Future Volume Alternative)

Intersection #44 Newport Blvd/17th St

Cycle (sec):	120	Critical Vol./Cap.(X):	0.737
Loss Time (sec):	0 (Y+R=4.0 sec)	Average Delay (sec/veh):	xxxxxx
Optimal Cycle:	87	Level Of Service:	C

Street Name:	Newport Boulevard						17th Street					
Approach:	North Bound			South Bound			East Bound			West Bound		
Movement:	L - T - R			L - T - R			L - T - R			L - T - R		
Control:	Protected			Protected			Protected			Protected		
Rights:	Include			Include			Include			Include		
Min. Green:	0	0	0	0	0	0	0	0	0	0	0	0
Lanes:	1 0 3	1 0		2 0 3	0 1		3 0 1	1 0		2 0 3	0 1	
Volume Module:												
Base Vol:	50	1789	209	559	1808	328	759	396	3	142	400	147
Growth Adj:	1.00	1.00	1.00	1.00	1.00	1.00	1.00	1.00	1.00	1.00	1.00	1.00
Initial Bse:	50	1789	209	559	1808	328	759	396	3	142	400	147
Added Vol:	0	0	0	0	0	0	0	0	0	0	0	0
PasserByVol:	0	0	0	0	0	0	0	0	0	0	0	0
Initial Fut:	50	1789	209	559	1808	328	759	396	3	142	400	147
User Adj:	1.00	1.00	1.00	1.00	1.00	1.00	1.00	1.00	1.00	1.00	1.00	1.00
PHF Adj:	1.00	1.00	1.00	1.00	1.00	1.00	1.00	1.00	1.00	1.00	1.00	1.00
PHF Volume:	50	1789	209	559	1808	328	759	396	3	142	400	147
Reduct Vol:	0	0	0	0	0	0	0	0	0	0	0	0
Reduced Vol:	50	1789	209	559	1808	328	759	396	3	142	400	147
PCE Adj:	1.00	1.00	1.00	1.00	1.00	1.00	1.00	1.00	1.00	1.00	1.00	1.00
MLF Adj:	1.00	1.00	1.00	1.00	1.00	1.00	1.00	1.00	1.00	1.00	1.00	1.00
FinalVolume:	50	1789	209	559	1808	328	759	396	3	142	400	147
Saturation Flow Module:												
Sat/Lane:	1600	1600	1600	1600	1600	1600	1600	1600	1600	1600	1600	1600
Adjustment:	1.00	1.00	1.00	1.00	1.00	1.00	1.00	1.00	1.00	1.00	1.00	1.00
Lanes:	1.00	3.58	0.42	2.00	3.00	1.00	3.00	1.98	0.02	2.00	3.00	1.00
Final Sat.:	1600	5731	669	3200	4800	1600	4800	3176	24	3200	4800	1600
Capacity Analysis Module:												
Vol/Sat:	0.03	0.31	0.31	0.17	0.38	0.21	0.16	0.12	0.12	0.04	0.08	0.09
Crit Moves:		****		****			****					****

Newport Banning Ranch
Existing Conditions - ICU
AM Peak Hour

Level Of Service Computation Report
ICU 1(Loss as Cycle Length %) Method (Future Volume Alternative)

Intersection #45 Orange Ave/17th St

Cycle (sec):	100	Critical Vol./Cap.(X):	0.419
Loss Time (sec):	0 (Y+R=4.0 sec)	Average Delay (sec/veh):	xxxxxx
Optimal Cycle:	39	Level Of Service:	A

Street Name:	Orange Avenue						17th Street					
Approach:	North Bound			South Bound			East Bound			West Bound		
Movement:	L - T - R			L - T - R			L - T - R			L - T - R		
Control:	Prot+Permit			Prot+Permit			Prot+Permit			Prot+Permit		
Rights:	Include			Include			Include			Include		
Min. Green:	0	0	0	0	0	0	0	0	0	0	0	0
Lanes:	1 0	1 1	0	1 0	1 0	1	1 0	2 0	1	1 0	2 0	1
Volume Module:												
Base Vol:	106	188	37	123	141	78	42	766	86	40	692	121
Growth Adj:	1.00	1.00	1.00	1.00	1.00	1.00	1.00	1.00	1.00	1.00	1.00	1.00
Initial Bse:	106	188	37	123	141	78	42	766	86	40	692	121
Added Vol:	0	0	0	0	0	0	0	0	0	0	0	0
PasserByVol:	0	0	0	0	0	0	0	0	0	0	0	0
Initial Fut:	106	188	37	123	141	78	42	766	86	40	692	121
User Adj:	1.00	1.00	1.00	1.00	1.00	1.00	1.00	1.00	1.00	1.00	1.00	1.00
PHF Adj:	1.00	1.00	1.00	1.00	1.00	1.00	1.00	1.00	1.00	1.00	1.00	1.00
PHF Volume:	106	188	37	123	141	78	42	766	86	40	692	121
Reduct Vol:	0	0	0	0	0	0	0	0	0	0	0	0
Reduced Vol:	106	188	37	123	141	78	42	766	86	40	692	121
PCE Adj:	1.00	1.00	1.00	1.00	1.00	1.00	1.00	1.00	1.00	1.00	1.00	1.00
MLF Adj:	1.00	1.00	1.00	1.00	1.00	1.00	1.00	1.00	1.00	1.00	1.00	1.00
FinalVolume:	106	188	37	123	141	78	42	766	86	40	692	121
Saturation Flow Module:												
Sat/Lane:	1600	1600	1600	1600	1600	1600	1600	1600	1600	1600	1600	1600
Adjustment:	1.00	1.00	1.00	1.00	1.00	1.00	1.00	1.00	1.00	1.00	1.00	1.00
Lanes:	1.00	1.67	0.33	1.00	1.00	1.00	1.00	2.00	1.00	1.00	2.00	1.00
Final Sat.:	1600	2674	526	1600	1600	1600	1600	3200	1600	1600	3200	1600
Capacity Analysis Module:												
Vol/Sat:	0.07	0.07	0.07	0.08	0.09	0.05	0.03	0.24	0.05	0.03	0.22	0.08
Crit Moves:	****				****			****		****		

Newport Banning Ranch
Existing Conditions - ICU
AM Peak Hour

Level Of Service Computation Report
ICU 1(Loss as Cycle Length %) Method (Future Volume Alternative)

Intersection #46 Santa Ana Ave/17th St

Cycle (sec): 100 Critical Vol./Cap.(X): 0.393
Loss Time (sec): 0 (Y+R=4.0 sec) Average Delay (sec/veh): xxxxxx
Optimal Cycle: 31 Level Of Service: A

Street Name:	Santa Ana Avenue						17th Street					
Approach:	North Bound			South Bound			East Bound			West Bound		
Movement:	L - T - R			L - T - R			L - T - R			L - T - R		
Control:	Permitted			Permitted			Prot+Permit			Prot+Permit		
Rights:	Include			Include			Include			Include		
Min. Green:	0	0	0	0	0	0	0	0	0	0	0	0
Lanes:	1 0 1	0 1		1 0 1	0 1		1 0 2	0 1		1 0 2	0 1	
Volume Module:												
Base Vol:	89	120	70	74	106	62	34	787	41	40	761	58
Growth Adj:	1.00	1.00	1.00	1.00	1.00	1.00	1.00	1.00	1.00	1.00	1.00	1.00
Initial Bse:	89	120	70	74	106	62	34	787	41	40	761	58
Added Vol:	0	0	0	0	0	0	0	0	0	0	0	0
PasserByVol:	0	0	0	0	0	0	0	0	0	0	0	0
Initial Fut:	89	120	70	74	106	62	34	787	41	40	761	58
User Adj:	1.00	1.00	1.00	1.00	1.00	1.00	1.00	1.00	1.00	1.00	1.00	1.00
PHF Adj:	1.00	1.00	1.00	1.00	1.00	1.00	1.00	1.00	1.00	1.00	1.00	1.00
PHF Volume:	89	120	70	74	106	62	34	787	41	40	761	58
Reduct Vol:	0	0	0	0	0	0	0	0	0	0	0	0
Reduced Vol:	89	120	70	74	106	62	34	787	41	40	761	58
PCE Adj:	1.00	1.00	1.00	1.00	1.00	1.00	1.00	1.00	1.00	1.00	1.00	1.00
MLF Adj:	1.00	1.00	1.00	1.00	1.00	1.00	1.00	1.00	1.00	1.00	1.00	1.00
FinalVolume:	89	120	70	74	106	62	34	787	41	40	761	58
Saturation Flow Module:												
Sat/Lane:	1600	1600	1600	1600	1600	1600	1600	1600	1600	1600	1600	1600
Adjustment:	1.00	1.00	1.00	1.00	1.00	1.00	1.00	1.00	1.00	1.00	1.00	1.00
Lanes:	1.00	1.00	1.00	1.00	1.00	1.00	1.00	2.00	1.00	1.00	2.00	1.00
Final Sat.:	1600	1600	1600	1600	1600	1600	1600	3200	1600	1600	3200	1600
Capacity Analysis Module:												
Vol/Sat:	0.06	0.08	0.04	0.05	0.07	0.04	0.02	0.25	0.03	0.03	0.24	0.04
Crit Moves:	****				****			****			****	

Newport Banning Ranch
Existing Conditions - ICU
AM Peak Hour

Level Of Service Computation Report
ICU 1(Loss as Cycle Length %) Method (Future Volume Alternative)

Intersection #47 Tustin Ave/17th St

Cycle (sec):	100	Critical Vol./Cap.(X):	0.473
Loss Time (sec):	0 (Y+R=4.0 sec)	Average Delay (sec/veh):	xxxxxx
Optimal Cycle:	35	Level Of Service:	A

Street Name:	Tustin Avenue						17th Street					
Approach:	North Bound			South Bound			East Bound			West Bound		
Movement:	L -	T -	R	L -	T -	R	L -	T -	R	L -	T -	R
Control:	Permitted			Permitted			Prot+Permit			Prot+Permit		
Rights:	Include			Include			Include			Include		
Min. Green:	0	0	0	0	0	0	0	0	0	0	0	0
Lanes:	1 0	0 1	0	1 0	1 0	1	1 0	1 1	0	1 0	1 1	0
Volume Module:												
Base Vol:	94	139	80	48	94	39	36	807	91	40	732	34
Growth Adj:	1.00	1.00	1.00	1.00	1.00	1.00	1.00	1.00	1.00	1.00	1.00	1.00
Initial Bse:	94	139	80	48	94	39	36	807	91	40	732	34
Added Vol:	0	0	0	0	0	0	0	0	0	0	0	0
PasserByVol:	0	0	0	0	0	0	0	0	0	0	0	0
Initial Fut:	94	139	80	48	94	39	36	807	91	40	732	34
User Adj:	1.00	1.00	1.00	1.00	1.00	1.00	1.00	1.00	1.00	1.00	1.00	1.00
PHF Adj:	1.00	1.00	1.00	1.00	1.00	1.00	1.00	1.00	1.00	1.00	1.00	1.00
PHF Volume:	94	139	80	48	94	39	36	807	91	40	732	34
Reduct Vol:	0	0	0	0	0	0	0	0	0	0	0	0
Reduced Vol:	94	139	80	48	94	39	36	807	91	40	732	34
PCE Adj:	1.00	1.00	1.00	1.00	1.00	1.00	1.00	1.00	1.00	1.00	1.00	1.00
MLF Adj:	1.00	1.00	1.00	1.00	1.00	1.00	1.00	1.00	1.00	1.00	1.00	1.00
FinalVolume:	94	139	80	48	94	39	36	807	91	40	732	34
Saturation Flow Module:												
Sat/Lane:	1600	1600	1600	1600	1600	1600	1600	1600	1600	1600	1600	1600
Adjustment:	1.00	1.00	1.00	1.00	1.00	1.00	1.00	1.00	1.00	1.00	1.00	1.00
Lanes:	1.00	0.63	0.37	1.00	1.00	1.00	1.00	1.80	0.20	1.00	1.91	0.09
Final Sat.:	1600	1016	584	1600	1600	1600	1600	2876	324	1600	3058	142
Capacity Analysis Module:												
Vol/Sat:	0.06	0.14	0.14	0.03	0.06	0.02	0.02	0.28	0.28	0.03	0.24	0.24
Crit Moves:		****		****				****		****		

Newport Banning Ranch
Existing Conditions - ICU
AM Peak Hour

Level Of Service Computation Report
ICU 1(Loss as Cycle Length %) Method (Future Volume Alternative)

Intersection #48 Irvine Ave/17th St

Cycle (sec):	100	Critical Vol./Cap.(X):	0.489
Loss Time (sec):	0 (Y+R=4.0 sec)	Average Delay (sec/veh):	xxxxxx
Optimal Cycle:	45	Level Of Service:	A

Street Name:	Irvine Avenue						17th Street					
Approach:	North Bound			South Bound			East Bound			West Bound		
Movement:	L - T - R			L - T - R			L - T - R			L - T - R		
Control:	Protected			Protected			Protected			Protected		
Rights:	Include			Include			Include			Include		
Min. Green:	0	0	0	0	0	0	0	0	0	0	0	0
Lanes:	2 0	2 0	1	2 0	2 0	1	2 0	1 1	0	1 0	1 1	0
Volume Module:												
Base Vol:	274	590	35	203	458	127	209	489	217	33	299	40
Growth Adj:	1.00	1.00	1.00	1.00	1.00	1.00	1.00	1.00	1.00	1.00	1.00	1.00
Initial Bse:	274	590	35	203	458	127	209	489	217	33	299	40
Added Vol:	0	0	0	0	0	0	0	0	0	0	0	0
PasserByVol:	0	0	0	0	0	0	0	0	0	0	0	0
Initial Fut:	274	590	35	203	458	127	209	489	217	33	299	40
User Adj:	1.00	1.00	1.00	1.00	1.00	1.00	1.00	1.00	1.00	1.00	1.00	1.00
PHF Adj:	1.00	1.00	1.00	1.00	1.00	1.00	1.00	1.00	1.00	1.00	1.00	1.00
PHF Volume:	274	590	35	203	458	127	209	489	217	33	299	40
Reduct Vol:	0	0	0	0	0	0	0	0	0	0	0	0
Reduced Vol:	274	590	35	203	458	127	209	489	217	33	299	40
PCE Adj:	1.00	1.00	1.00	1.00	1.00	1.00	1.00	1.00	1.00	1.00	1.00	1.00
MLF Adj:	1.00	1.00	1.00	1.00	1.00	1.00	1.00	1.00	1.00	1.00	1.00	1.00
FinalVolume:	274	590	35	203	458	127	209	489	217	33	299	40
Saturation Flow Module:												
Sat/Lane:	1600	1600	1600	1600	1600	1600	1600	1600	1600	1600	1600	1600
Adjustment:	1.00	1.00	1.00	1.00	1.00	1.00	1.00	1.00	1.00	1.00	1.00	1.00
Lanes:	2.00	2.00	1.00	2.00	2.00	1.00	2.00	1.39	0.61	1.00	1.76	0.24
Final Sat.:	3200	3200	1600	3200	3200	1600	3200	2216	984	1600	2822	378
Capacity Analysis Module:												
Vol/Sat:	0.09	0.18	0.02	0.06	0.14	0.08	0.07	0.22	0.22	0.02	0.11	0.11
Crit Moves:		****		****				****		****		

Newport Banning Ranch
Existing Conditions - ICU
AM Peak Hour

Level Of Service Computation Report
ICU 1(Loss as Cycle Length %) Method (Future Volume Alternative)

Intersection #49 Placentia Ave/16th St

Cycle (sec):	100	Critical Vol./Cap.(X):	0.317
Loss Time (sec):	0 (Y+R=4.0 sec)	Average Delay (sec/veh):	xxxxxx
Optimal Cycle:	21	Level Of Service:	A

Street Name:	Placentia Avenue						16th Street					
Approach:	North Bound			South Bound			East Bound			West Bound		
Movement:	L - T - R			L - T - R			L - T - R			L - T - R		
Control:	Permitted			Permitted			Permitted			Permitted		
Rights:	Include			Include			Include			Include		
Min. Green:	0	0	0	0	0	0	0	0	0	0	0	0
Lanes:	1 0	1 1	0	1 0	1 1	0	1 0	0 1	0	1 0	0 1	0
Volume Module:												
Base Vol:	76	454	36	70	442	88	26	57	31	17	105	35
Growth Adj:	1.00	1.00	1.00	1.00	1.00	1.00	1.00	1.00	1.00	1.00	1.00	1.00
Initial Bse:	76	454	36	70	442	88	26	57	31	17	105	35
Added Vol:	0	0	0	0	0	0	0	0	0	0	0	0
PasserByVol:	0	0	0	0	0	0	0	0	0	0	0	0
Initial Fut:	76	454	36	70	442	88	26	57	31	17	105	35
User Adj:	1.00	1.00	1.00	1.00	1.00	1.00	1.00	1.00	1.00	1.00	1.00	1.00
PHF Adj:	1.00	1.00	1.00	1.00	1.00	1.00	1.00	1.00	1.00	1.00	1.00	1.00
PHF Volume:	76	454	36	70	442	88	26	57	31	17	105	35
Reduct Vol:	0	0	0	0	0	0	0	0	0	0	0	0
Reduced Vol:	76	454	36	70	442	88	26	57	31	17	105	35
PCE Adj:	1.00	1.00	1.00	1.00	1.00	1.00	1.00	1.00	1.00	1.00	1.00	1.00
MLF Adj:	1.00	1.00	1.00	1.00	1.00	1.00	1.00	1.00	1.00	1.00	1.00	1.00
FinalVolume:	76	454	36	70	442	88	26	57	31	17	105	35
Saturation Flow Module:												
Sat/Lane:	1600	1600	1600	1600	1600	1600	1600	1600	1600	1600	1600	1600
Adjustment:	1.00	1.00	1.00	1.00	1.00	1.00	1.00	1.00	1.00	1.00	1.00	1.00
Lanes:	1.00	1.85	0.15	1.00	1.67	0.33	1.00	0.65	0.35	1.00	0.75	0.25
Final Sat.:	1600	2965	235	1600	2669	531	1600	1036	564	1600	1200	400
Capacity Analysis Module:												
Vol/Sat:	0.05	0.15	0.15	0.04	0.17	0.17	0.02	0.05	0.06	0.01	0.09	0.09
Crit Moves:	****				****		****				****	

Newport Banning Ranch
Existing Conditions - ICU
AM Peak Hour

Level Of Service Computation Report
ICU 1(Loss as Cycle Length %) Method (Future Volume Alternative)

Intersection #50 Superior Ave/16th St

Cycle (sec):	100	Critical Vol./Cap.(X):	0.445
Loss Time (sec):	0 (Y+R=4.0 sec)	Average Delay (sec/veh):	xxxxxx
Optimal Cycle:	26	Level Of Service:	A

Street Name:	Superior Avenue						16th Street					
Approach:	North Bound			South Bound			East Bound			West Bound		
Movement:	L -	T -	R	L -	T -	R	L -	T -	R	L -	T -	R
Control:	Permitted			Permitted			Permitted			Permitted		
Rights:	Include			Include			Include			Include		
Min. Green:	0	0	0	0	0	0	0	0	0	0	0	0
Lanes:	1 0	2 0	1	1 0	1 1	0	1 0	1 0	0	0 1	0 0	1
Volume Module:												
Base Vol:	25	967	66	41	540	130	23	173	0	15	153	15
Growth Adj:	1.00	1.00	1.00	1.00	1.00	1.00	1.00	1.00	1.00	1.00	1.00	1.00
Initial Bse:	25	967	66	41	540	130	23	173	0	15	153	15
Added Vol:	0	0	0	0	0	0	0	0	0	0	0	0
PasserByVol:	0	0	0	0	0	0	0	0	0	0	0	0
Initial Fut:	25	967	66	41	540	130	23	173	0	15	153	15
User Adj:	1.00	1.00	1.00	1.00	1.00	1.00	1.00	1.00	1.00	1.00	1.00	1.00
PHF Adj:	1.00	1.00	1.00	1.00	1.00	1.00	1.00	1.00	1.00	1.00	1.00	1.00
PHF Volume:	25	967	66	41	540	130	23	173	0	15	153	15
Reduct Vol:	0	0	0	0	0	0	0	0	0	0	0	0
Reduced Vol:	25	967	66	41	540	130	23	173	0	15	153	15
PCE Adj:	1.00	1.00	1.00	1.00	1.00	1.00	1.00	1.00	1.00	1.00	1.00	1.00
MLF Adj:	1.00	1.00	1.00	1.00	1.00	1.00	1.00	1.00	1.00	1.00	1.00	1.00
FinalVolume:	25	967	66	41	540	130	23	173	0	15	153	15
Saturation Flow Module:												
Sat/Lane:	1600	1600	1600	1600	1600	1600	1600	1600	1600	1600	1600	1600
Adjustment:	1.00	1.00	1.00	1.00	1.00	1.00	1.00	1.00	1.00	1.00	1.00	1.00
Lanes:	1.00	2.00	1.00	1.00	1.61	0.39	1.00	1.00	0.00	0.09	0.91	1.00
Final Sat.:	1600	3200	1600	1600	2579	621	1600	1600	0	143	1457	1600
Capacity Analysis Module:												
Vol/Sat:	0.02	0.30	0.04	0.03	0.21	0.21	0.01	0.11	0.00	0.01	0.10	0.01
Crit Moves:		****		****				****		****		

Newport Banning Ranch
Existing Conditions - ICU
AM Peak Hour

Level Of Service Computation Report
ICU 1(Loss as Cycle Length %) Method (Future Volume Alternative)

Intersection #51 Newport Blvd/16th St

Cycle (sec):	120	Critical Vol./Cap.(X):	0.493
Loss Time (sec):	0 (Y+R=4.0 sec)	Average Delay (sec/veh):	xxxxxx
Optimal Cycle:	37	Level Of Service:	A

Street Name:	Newport Boulevard						16th Street					
Approach:	North Bound			South Bound			East Bound			West Bound		
Movement:	L - T - R			L - T - R			L - T - R			L - T - R		
Control:	Protected			Protected			Permitted			Permitted		
Rights:	Include			Include			Include			Include		
Min. Green:	0	0	0	0	0	0	0	0	0	0	0	0
Lanes:	1 0	2 1	0	1 0	3 0	1	0 0	1! 0	0	0 0	1! 0	0
Volume Module:												
Base Vol:	8	1539	42	60	1370	49	38	44	13	19	68	77
Growth Adj:	1.00	1.00	1.00	1.00	1.00	1.00	1.00	1.00	1.00	1.00	1.00	1.00
Initial Bse:	8	1539	42	60	1370	49	38	44	13	19	68	77
Added Vol:	0	0	0	0	0	0	0	0	0	0	0	0
PasserByVol:	0	0	0	0	0	0	0	0	0	0	0	0
Initial Fut:	8	1539	42	60	1370	49	38	44	13	19	68	77
User Adj:	1.00	1.00	1.00	1.00	1.00	1.00	1.00	1.00	1.00	1.00	1.00	1.00
PHF Adj:	1.00	1.00	1.00	1.00	1.00	1.00	1.00	1.00	1.00	1.00	1.00	1.00
PHF Volume:	8	1539	42	60	1370	49	38	44	13	19	68	77
Reduct Vol:	0	0	0	0	0	0	0	0	0	0	0	0
Reduced Vol:	8	1539	42	60	1370	49	38	44	13	19	68	77
PCE Adj:	1.00	1.00	1.00	1.00	1.00	1.00	1.00	1.00	1.00	1.00	1.00	1.00
MLF Adj:	1.00	1.00	1.00	1.00	1.00	1.00	1.00	1.00	1.00	1.00	1.00	1.00
FinalVolume:	8	1539	42	60	1370	49	38	44	13	19	68	77
Saturation Flow Module:												
Sat/Lane:	1600	1600	1600	1600	1600	1600	1600	1600	1600	1600	1600	1600
Adjustment:	1.00	1.00	1.00	1.00	1.00	1.00	1.00	1.00	1.00	1.00	1.00	1.00
Lanes:	1.00	2.92	0.08	1.00	3.00	1.00	0.40	0.46	0.14	0.12	0.41	0.47
Final Sat.:	1600	4672	128	1600	4800	1600	640	741	219	185	663	751
Capacity Analysis Module:												
Vol/Sat:	0.01	0.33	0.33	0.04	0.29	0.03	0.02	0.06	0.06	0.01	0.10	0.10
Crit Moves:		****			****			****			****	

Newport Banning Ranch
Existing Conditions - ICU
AM Peak Hour

Level Of Service Computation Report
ICU 1(Loss as Cycle Length %) Method (Future Volume Alternative)

Intersection #52 Bluff Rd/Victoria St

Cycle (sec):	100	Critical Vol./Cap.(X):	0.470
Loss Time (sec):	0 (Y+R=4.0 sec)	Average Delay (sec/veh):	xxxxxx
Optimal Cycle:	43	Level Of Service:	A

Street Name:	Bluff Road									Victoria St					
Approach:	North Bound			South Bound			East Bound			West Bound					
Movement:	L	- T	- R	L	- T	- R	L	- T	- R	L	- T	- R			
Control:	Protected			Protected			Protected			Protected					
Rights:	Include			Include			Include			Include					
Min. Green:	0	0	0	0	0	0	0	0	0	0	0	0			
Lanes:	0 0	0 0	0	0 0	0 0	0	0 0	2 0	0	0 0	2 0	0			
Volume Module:															
Base Vol:	0	0	0	0	0	0	0	1505	0	0	749	0			
Growth Adj:	1.00	1.00	1.00	1.00	1.00	1.00	1.00	1.00	1.00	1.00	1.00	1.00			
Initial Bse:	0	0	0	0	0	0	0	1505	0	0	749	0			
Added Vol:	0	0	0	0	0	0	0	0	0	0	0	0			
PasserByVol:	0	0	0	0	0	0	0	0	0	0	0	0			
Initial Fut:	0	0	0	0	0	0	0	1505	0	0	749	0			
User Adj:	1.00	1.00	1.00	1.00	1.00	1.00	1.00	1.00	1.00	1.00	1.00	1.00			
PHF Adj:	1.00	1.00	1.00	1.00	1.00	1.00	1.00	1.00	1.00	1.00	1.00	1.00			
PHF Volume:	0	0	0	0	0	0	0	1505	0	0	749	0			
Reduct Vol:	0	0	0	0	0	0	0	0	0	0	0	0			
Reduced Vol:	0	0	0	0	0	0	0	1505	0	0	749	0			
PCE Adj:	1.00	1.00	1.00	1.00	1.00	1.00	1.00	1.00	1.00	1.00	1.00	1.00			
MLF Adj:	1.00	1.00	1.00	1.00	1.00	1.00	1.00	1.00	1.00	1.00	1.00	1.00			
FinalVolume:	0	0	0	0	0	0	0	1505	0	0	749	0			
Saturation Flow Module:															
Sat/Lane:	1600	1600	1600	1600	1600	1600	1600	1600	1600	1600	1600	1600			
Adjustment:	1.00	1.00	1.00	1.00	1.00	1.00	1.00	1.00	1.00	1.00	1.00	1.00			
Lanes:	0.00	0.00	0.00	0.00	0.00	0.00	0.00	2.00	0.00	0.00	2.00	0.00			
Final Sat.:	0	0	0	0	0	0	0	3200	0	0	3200	0			
Capacity Analysis Module:															
Vol/Sat:	0.00	0.00	0.00	0.00	0.00	0.00	0.00	0.47	0.00	0.00	0.23	0.00			
Crit Moves:								****		****					

Newport Banning Ranch
Existing Conditions - ICU
AM Peak Hour

Level Of Service Computation Report
2000 HCM Operations Method (Future Volume Alternative)

Intersection #53 Bluff Rd/19th St

Cycle (sec): 100 Critical Vol./Cap.(X): 0.000
Loss Time (sec): 0 (Y+R=4.0 sec) Average Delay (sec/veh): 0.0
Optimal Cycle: 0 Level Of Service:

Street Name:	Bluff Rd						19th Street					
Approach:	North Bound			South Bound			East Bound			West Bound		
Movement:	L -	T -	R	L -	T -	R	L -	T -	R	L -	T -	R
Control:	Protected			Protected			Protected			Protected		
Rights:	Include			Include			Include			Include		
Min. Green:	0	0	0	0	0	0	0	0	0	0	0	0
Lanes:	0 0	0 0	0	0 0	0 0	0	0 0	0 0	0	0 0	0 0	0
Volume Module:												
Base Vol:	0	0	0	0	0	0	0	0	0	0	0	0
Growth Adj:	0.00	0.00	0.00	0.00	0.00	0.00	0.00	0.00	0.00	0.00	0.00	0.00
Initial Bse:	0	0	0	0	0	0	0	0	0	0	0	0
Added Vol:	0	0	0	0	0	0	0	0	0	0	0	0
PasserByVol:	0	0	0	0	0	0	0	0	0	0	0	0
Initial Fut:	0	0	0	0	0	0	0	0	0	0	0	0
User Adj:	0.00	0.00	0.00	0.00	0.00	0.00	0.00	0.00	0.00	0.00	0.00	0.00
PHF Adj:	0.00	0.00	0.00	0.00	0.00	0.00	0.00	0.00	0.00	0.00	0.00	0.00
PHF Volume:	0	0	0	0	0	0	0	0	0	0	0	0
Reduct Vol:	0	0	0	0	0	0	0	0	0	0	0	0
Reduced Vol:	0	0	0	0	0	0	0	0	0	0	0	0
PCE Adj:	0.00	0.00	0.00	0.00	0.00	0.00	0.00	0.00	0.00	0.00	0.00	0.00
MLF Adj:	0.00	0.00	0.00	0.00	0.00	0.00	0.00	0.00	0.00	0.00	0.00	0.00
FinalVolume:	0	0	0	0	0	0	0	0	0	0	0	0
Saturation Flow Module:												
Sat/Lane:	0	0	0	0	0	0	0	0	0	0	0	0
Adjustment:	1.00	1.00	1.00	1.00	1.00	1.00	1.00	1.00	1.00	1.00	1.00	1.00
Lanes:	0.00	0.00	0.00	0.00	0.00	0.00	0.00	0.00	0.00	0.00	0.00	0.00
Final Sat.:	0	0	0	0	0	0	0	0	0	0	0	0
Capacity Analysis Module:												
Vol/Sat:	0.00	0.00	0.00	0.00	0.00	0.00	0.00	0.00	0.00	0.00	0.00	0.00
Crit Moves:												
Green/Cycle:	0.00	0.00	0.00	0.00	0.00	0.00	0.00	0.00	0.00	0.00	0.00	0.00
Volume/Cap:	0.00	0.00	0.00	0.00	0.00	0.00	0.00	0.00	0.00	0.00	0.00	0.00
Delay/Veh:	0.0	0.0	0.0	0.0	0.0	0.0	0.0	0.0	0.0	0.0	0.0	0.0
User DelAdj:	1.00	1.00	1.00	1.00	1.00	1.00	1.00	1.00	1.00	1.00	1.00	1.00
AdjDel/Veh:	0.0	0.0	0.0	0.0	0.0	0.0	0.0	0.0	0.0	0.0	0.0	0.0
LOS by Move:												
HCM2kAvgQ:	0	0	0	0	0	0	0	0	0	0	0	0

Note: Queue reported is the number of cars per lane.

Traffix 7.9.0215 (c) 2008 Dowling Assoc. Licensed to KIMLEY HORN, ORANGE, CA

Newport Banning Ranch
Existing Conditions - ICU
AM Peak Hour

Level Of Service Computation Report
2000 HCM Operations Method (Future Volume Alternative)

Intersection #54 Bluff Rd/17th St

Cycle (sec): 100 Critical Vol./Cap.(X): 0.000
Loss Time (sec): 0 (Y+R=4.0 sec) Average Delay (sec/veh): 0.0
Optimal Cycle: 0 Level Of Service:

Street Name:	Bluff Road						17th Street					
Approach:	North Bound			South Bound			East Bound			West Bound		
Movement:	L - T - R			L - T - R			L - T - R			L - T - R		
Control:	Protected			Protected			Protected			Protected		
Rights:	Include			Include			Include			Include		
Min. Green:	0	0	0	0	0	0	0	0	0	0	0	0
Lanes:	0 0 0 0 0			0 0 0 0 0			0 0 0 0 0			0 0 0 0 0		
Volume Module:												
Base Vol:	0	0	0	0	0	0	0	0	0	0	0	0
Growth Adj:	0.00	0.00	0.00	0.00	0.00	0.00	0.00	0.00	0.00	0.00	0.00	0.00
Initial Bse:	0	0	0	0	0	0	0	0	0	0	0	0
Added Vol:	0	0	0	0	0	0	0	0	0	0	0	0
PasserByVol:	0	0	0	0	0	0	0	0	0	0	0	0
Initial Fut:	0	0	0	0	0	0	0	0	0	0	0	0
User Adj:	0.00	0.00	0.00	0.00	0.00	0.00	0.00	0.00	0.00	0.00	0.00	0.00
PHF Adj:	0.00	0.00	0.00	0.00	0.00	0.00	0.00	0.00	0.00	0.00	0.00	0.00
PHF Volume:	0	0	0	0	0	0	0	0	0	0	0	0
Reduct Vol:	0	0	0	0	0	0	0	0	0	0	0	0
Reduced Vol:	0	0	0	0	0	0	0	0	0	0	0	0
PCE Adj:	0.00	0.00	0.00	0.00	0.00	0.00	0.00	0.00	0.00	0.00	0.00	0.00
MLF Adj:	0.00	0.00	0.00	0.00	0.00	0.00	0.00	0.00	0.00	0.00	0.00	0.00
FinalVolume:	0	0	0	0	0	0	0	0	0	0	0	0
Saturation Flow Module:												
Sat/Lane:	0	0	0	0	0	0	0	0	0	0	0	0
Adjustment:	1.00	1.00	1.00	1.00	1.00	1.00	1.00	1.00	1.00	1.00	1.00	1.00
Lanes:	0.00	0.00	0.00	0.00	0.00	0.00	0.00	0.00	0.00	0.00	0.00	0.00
Final Sat.:	0	0	0	0	0	0	0	0	0	0	0	0
Capacity Analysis Module:												
Vol/Sat:	0.00	0.00	0.00	0.00	0.00	0.00	0.00	0.00	0.00	0.00	0.00	0.00
Crit Moves:												
Green/Cycle:	0.00	0.00	0.00	0.00	0.00	0.00	0.00	0.00	0.00	0.00	0.00	0.00
Volume/Cap:	0.00	0.00	0.00	0.00	0.00	0.00	0.00	0.00	0.00	0.00	0.00	0.00
Delay/Veh:	0.0	0.0	0.0	0.0	0.0	0.0	0.0	0.0	0.0	0.0	0.0	0.0
User DelAdj:	1.00	1.00	1.00	1.00	1.00	1.00	1.00	1.00	1.00	1.00	1.00	1.00
AdjDel/Veh:	0.0	0.0	0.0	0.0	0.0	0.0	0.0	0.0	0.0	0.0	0.0	0.0
LOS by Move:												
HCM2kAvgQ:	0	0	0	0	0	0	0	0	0	0	0	0

Note: Queue reported is the number of cars per lane.

Traffix 7.9.0215 (c) 2008 Dowling Assoc. Licensed to KIMLEY HORN, ORANGE, CA

Newport Banning Ranch
Existing Conditions - ICU
AM Peak Hour

Level Of Service Computation Report
2000 HCM Unsignalized Method (Future Volume Alternative)

Intersection #55 Bluff Rd/16th St

Average Delay (sec/veh): 0.0 Worst Case Level Of Service: [0.0]

Street Name:	Bluff Road									16th Street								
Approach:	North Bound					South Bound				East Bound					West Bound			
Movement:	L	-	T	-	R	L	-	T	-	R	L	-	T	-	R	L	-	T	-	R
Control:	Uncontrolled					Uncontrolled					Stop Sign					Stop Sign				
Rights:	Include					Include					Include					Include				
Lanes:	0	0	0	0	0	0	0	0	0	0	0	0	0	0	0	0	0	0	0	0
Volume Module:																				
Base Vol:	0	0	0	0	0	0	0	0	0	0	0	0	0	0	0	0	0	0	0	0
Growth Adj:	0.00	0.00	0.00	0.00	0.00	0.00	0.00	0.00	0.00	0.00	0.00	0.00	0.00	0.00	0.00	0.00	0.00	0.00	0.00	0.00
Initial Bse:	0	0	0	0	0	0	0	0	0	0	0	0	0	0	0	0	0	0	0	0
Added Vol:	0	0	0	0	0	0	0	0	0	0	0	0	0	0	0	0	0	0	0	0
PasserByVol:	0	0	0	0	0	0	0	0	0	0	0	0	0	0	0	0	0	0	0	0
Initial Fut:	0	0	0	0	0	0	0	0	0	0	0	0	0	0	0	0	0	0	0	0
User Adj:	0.00	0.00	0.00	0.00	0.00	0.00	0.00	0.00	0.00	0.00	0.00	0.00	0.00	0.00	0.00	0.00	0.00	0.00	0.00	0.00
PHF Adj:	0.00	0.00	0.00	0.00	0.00	0.00	0.00	0.00	0.00	0.00	0.00	0.00	0.00	0.00	0.00	0.00	0.00	0.00	0.00	0.00
PHF Volume:	0	0	0	0	0	0	0	0	0	0	0	0	0	0	0	0	0	0	0	0
Reduct Vol:	0	0	0	0	0	0	0	0	0	0	0	0	0	0	0	0	0	0	0	0
FinalVolume:	0	0	0	0	0	0	0	0	0	0	0	0	0	0	0	0	0	0	0	0
Critical Gap Module:																				
Critical Gp:	0.0	0.0	0.0	0.0	0.0	0.0	0.0	0.0	0.0	0.0	0.0	0.0	0.0	0.0	0.0	0.0	0.0	0.0	0.0	0.0
FollowUpTim:	0.0	0.0	0.0	0.0	0.0	0.0	0.0	0.0	0.0	0.0	0.0	0.0	0.0	0.0	0.0	0.0	0.0	0.0	0.0	0.0
Capacity Module:																				
Cnflict Vol:	0	0	0	0	0	0	0	0	0	0	0	0	0	0	0	0	0	0	0	0
Potent Cap.:	0	0	0	0	0	0	0	0	0	0	0	0	0	0	0	0	0	0	0	0
Move Cap.:	1	1	1	1	1	1	1	1	1	1	1	1	1	1	1	1	1	1	1	1
Volume/Cap:	0.00	0.00	0.00	0.00	0.00	0.00	0.00	0.00	0.00	0.00	0.00	0.00	0.00	0.00	0.00	0.00	0.00	0.00	0.00	0.00
Level Of Service Module:																				
2Way95thQ:	0.0	0.0	0.0	0.0	0.0	0.0	0.0	0.0	0.0	0.0	0.0	0.0	0.0	0.0	0.0	0.0	0.0	0.0	0.0	0.0
Control Del:	0.0	0.0	0.0	0.0	0.0	0.0	0.0	0.0	0.0	0.0	0.0	0.0	0.0	0.0	0.0	0.0	0.0	0.0	0.0	0.0
LOS by Move:																				
Movement:	LT	-	LTR	-	RT	LT	-	LTR	-	RT	LT	-	LTR	-	RT	LT	-	LTR	-	RT
Shared Cap.:	0	0	0	0	0	0	0	0	0	0	0	0	0	0	0	0	0	0	0	0
SharedQueue:	0.0	0.0	0.0	0.0	0.0	0.0	0.0	0.0	0.0	0.0	0.0	0.0	0.0	0.0	0.0	0.0	0.0	0.0	0.0	0.0
Shrd ConDel:	1.0	1.0	1.0	1.0	1.0	1.0	1.0	1.0	1.0	1.0	1.0	1.0	1.0	1.0	1.0	1.0	1.0	1.0	1.0	1.0
Shared LOS:																				
ApproachDel:	0.0					0.0					0.0					0.0				
ApproachLOS:																				

Note: Queue reported is the number of cars per lane.

Newport Banning Ranch
Existing Conditions - ICU
AM Peak Hour

Level Of Service Computation Report
ICU 1(Loss as Cycle Length %) Method (Future Volume Alternative)

Intersection #56 Bluff Rd/15th St

Cycle (sec):	100	Critical Vol./Cap.(X):	0.000
Loss Time (sec):	0 (Y+R=4.0 sec)	Average Delay (sec/veh):	xxxxxx
Optimal Cycle:	0	Level Of Service:	

Street Name:	Bluff Road					15th Street					
Approach:	North Bound			South Bound			East Bound			West Bound		
Movement:	L -	T -	R	L -	T -	R	L -	T -	R	L -	T -	R
Control:	Protected			Protected			Protected			Protected		
Rights:	Include			Include			Include			Include		
Min. Green:	0	0	0	0	0	0	0	0	0	0	0	0
Lanes:	0 0	0 0	0	0 0	0 0	0	0 0	0 0	0	0 0	0 0	0
Volume Module:												
Base Vol:	0	0	0	0	0	0	0	0	0	0	0	0
Growth Adj:	0.00	0.00	0.00	0.00	0.00	0.00	0.00	0.00	0.00	0.00	0.00	0.00
Initial Bse:	0	0	0	0	0	0	0	0	0	0	0	0
Added Vol:	0	0	0	0	0	0	0	0	0	0	0	0
PasserByVol:	0	0	0	0	0	0	0	0	0	0	0	0
Initial Fut:	0	0	0	0	0	0	0	0	0	0	0	0
User Adj:	0.00	0.00	0.00	0.00	0.00	0.00	0.00	0.00	0.00	0.00	0.00	0.00
PHF Adj:	0.00	0.00	0.00	0.00	0.00	0.00	0.00	0.00	0.00	0.00	0.00	0.00
PHF Volume:	0	0	0	0	0	0	0	0	0	0	0	0
Reduct Vol:	0	0	0	0	0	0	0	0	0	0	0	0
Reduced Vol:	0	0	0	0	0	0	0	0	0	0	0	0
PCE Adj:	0.00	0.00	0.00	0.00	0.00	0.00	0.00	0.00	0.00	0.00	0.00	0.00
MLF Adj:	0.00	0.00	0.00	0.00	0.00	0.00	0.00	0.00	0.00	0.00	0.00	0.00
FinalVolume:	0	0	0	0	0	0	0	0	0	0	0	0
Saturation Flow Module:												
Sat/Lane:	0	0	0	0	0	0	0	0	0	0	0	0
Adjustment:	1.00	1.00	1.00	1.00	1.00	1.00	1.00	1.00	1.00	1.00	1.00	1.00
Lanes:	0.00	0.00	0.00	0.00	0.00	0.00	0.00	0.00	0.00	0.00	0.00	0.00
Final Sat.:	0	0	0	0	0	0	0	0	0	0	0	0
Capacity Analysis Module:												
Vol/Sat:	0.00	0.00	0.00	0.00	0.00	0.00	0.00	0.00	0.00	0.00	0.00	0.00
Crit Moves:												

Newport Banning Ranch
Existing Conditions - ICU
AM Peak Hour

Level Of Service Computation Report
ICU 1(Loss as Cycle Length %) Method (Future Volume Alternative)

Intersection #57 Bluff Rd/W. Coast Hwy

Cycle (sec):	120	Critical Vol./Cap.(X):	0.590
Loss Time (sec):	0 (Y+R=4.0 sec)	Average Delay (sec/veh):	xxxxxx
Optimal Cycle:	56	Level Of Service:	A

Street Name:	Bluff Road									W. Coast Highway								
Approach:	North Bound				South Bound				East Bound				West Bound					
Movement:	L	-	T	-	R	L	-	T	-	R	L	-	T	-	R	L	-	T	-	R
Control:	Protected					Protected					Protected					Protected				
Rights:	Include					Include					Include					Include				
Min. Green:	0	0	0			0	0	0			0	0	0			0	0	0		
Lanes:	0	0	0	0	0	0	0	0	0	0	0	0	3	0	0	0	0	3	0	0
Volume Module:																				
Base Vol:	0	0	0			0	0	0			0	2834	0			0	1183	0		
Growth Adj:	1.00	1.00	1.00			1.00	1.00	1.00			1.00	1.00	1.00			1.00	1.00	1.00		
Initial Bse:	0	0	0			0	0	0			0	2834	0			0	1183	0		
Added Vol:	0	0	0			0	0	0			0	0	0			0	0	0		
PasserByVol:	0	0	0			0	0	0			0	0	0			0	0	0		
Initial Fut:	0	0	0			0	0	0			0	2834	0			0	1183	0		
User Adj:	1.00	1.00	1.00			1.00	1.00	1.00			1.00	1.00	1.00			1.00	1.00	1.00		
PHF Adj:	1.00	1.00	1.00			1.00	1.00	1.00			1.00	1.00	1.00			1.00	1.00	1.00		
PHF Volume:	0	0	0			0	0	0			0	2834	0			0	1183	0		
Reduct Vol:	0	0	0			0	0	0			0	0	0			0	0	0		
Reduced Vol:	0	0	0			0	0	0			0	2834	0			0	1183	0		
PCE Adj:	1.00	1.00	1.00			1.00	1.00	1.00			1.00	1.00	1.00			1.00	1.00	1.00		
MLF Adj:	1.00	1.00	1.00			1.00	1.00	1.00			1.00	1.00	1.00			1.00	1.00	1.00		
FinalVolume:	0	0	0			0	0	0			0	2834	0			0	1183	0		
Saturation Flow Module:																				
Sat/Lane:	1600	1600	1600			1600	1600	1600			1600	1600	1600			1600	1600	1600		
Adjustment:	1.00	1.00	1.00			1.00	1.00	1.00			1.00	1.00	1.00			1.00	1.00	1.00		
Lanes:	0.00	0.00	0.00			0.00	0.00	0.00			0.00	3.00	0.00			0.00	3.00	0.00		
Final Sat.:	0	0	0			0	0	0			0	4800	0			0	4800	0		
Capacity Analysis Module:																				
Vol/Sat:	0.00	0.00	0.00			0.00	0.00	0.00			0.00	0.59	0.00			0.00	0.25	0.00		
Crit Moves:												****				****				

Newport Banning Ranch
Existing Conditions - ICU
AM Peak Hour

Level Of Service Computation Report
2000 HCM 4-Way Stop Method (Future Volume Alternative)

Intersection #58 Monrovia Ave/15th Street

Cycle (sec):	100	Critical Vol./Cap.(X):	0.141
Loss Time (sec):	0 (Y+R=4.0 sec)	Average Delay (sec/veh):	7.5
Optimal Cycle:	0	Level Of Service:	A

Street Name:	Monrovia Ave						15th Street					
Approach:	North Bound			South Bound			East Bound			West Bound		
Movement:	L -	T -	R	L -	T -	R	L -	T -	R	L -	T -	R
Control:	Stop Sign			Stop Sign			Stop Sign			Stop Sign		
Rights:	Include			Include			Include			Include		
Min. Green:	0	0	0	0	0	0	0	0	0	0	0	0
Lanes:	0 0	0 1	0	0 0	1! 0	0	1 0	0 0	0	0 0	1! 0	0
Volume Module: >> Count Date: 4 May 2011 << Existing AM Peak Hour												
Base Vol:	0	6	11	113	3	1	1	0	0	5	2	82
Growth Adj:	1.00	1.00	1.00	1.00	1.00	1.00	1.00	1.00	1.00	1.00	1.00	1.00
Initial Bse:	0	6	11	113	3	1	1	0	0	5	2	82
Added Vol:	0	0	0	0	0	0	0	0	0	0	0	0
PasserByVol:	0	0	0	0	0	0	0	0	0	0	0	0
Initial Fut:	0	6	11	113	3	1	1	0	0	5	2	82
User Adj:	1.00	1.00	1.00	1.00	1.00	1.00	1.00	1.00	1.00	1.00	1.00	1.00
PHF Adj:	1.00	1.00	1.00	1.00	1.00	1.00	1.00	1.00	1.00	1.00	1.00	1.00
PHF Volume:	0	6	11	113	3	1	1	0	0	5	2	82
Reduct Vol:	0	0	0	0	0	0	0	0	0	0	0	0
Reduced Vol:	0	6	11	113	3	1	1	0	0	5	2	82
PCE Adj:	1.00	1.00	1.00	1.00	1.00	1.00	1.00	1.00	1.00	1.00	1.00	1.00
MLF Adj:	1.00	1.00	1.00	1.00	1.00	1.00	1.00	1.00	1.00	1.00	1.00	1.00
FinalVolume:	0	6	11	113	3	1	1	0	0	5	2	82
Saturation Flow Module:												
Adjustment:	1.00	1.00	1.00	1.00	1.00	1.00	1.00	1.00	1.00	1.00	1.00	1.00
Lanes:	0.00	0.35	0.65	0.97	0.02	0.01	1.00	0.00	0.00	0.06	0.02	0.92
Final Sat.:	0	326	597	800	21	7	781	0	0	54	22	882
Capacity Analysis Module:												
Vol/Sat:	xxxx	0.02	0.02	0.14	0.14	0.14	0.00	xxxx	xxxx	0.09	0.09	0.09
Crit Moves:		****		****			****				****	
Delay/Veh:	0.0	6.9	6.9	8.0	8.0	8.0	7.5	0.0	0.0	7.0	7.0	7.0
Delay Adj:	1.00	1.00	1.00	1.00	1.00	1.00	1.00	1.00	1.00	1.00	1.00	1.00
AdjDel/Veh:	0.0	6.9	6.9	8.0	8.0	8.0	7.5	0.0	0.0	7.0	7.0	7.0
LOS by Move:	*	A	A	A	A	A	A	*	*	A	A	A
ApproachDel:		6.9			8.0			7.5			7.0	
Delay Adj:		1.00			1.00			1.00			1.00	
ApprAdjDel:		6.9			8.0			7.5			7.0	
LOS by Appr:		A			A			A			A	
AllWayAvgQ:	0.0	0.0	0.0	0.2	0.2	0.2	0.0	0.0	0.0	0.1	0.1	0.1

Newport Banning Ranch
Existing Conditions - ICU
AM Peak Hour

Note: Queue reported is the number of cars per lane.

Newport Banning Ranch
Existing Conditions - ICU
AM Peak Hour

Level Of Service Computation Report
ICU 1(Loss as Cycle Length %) Method (Future Volume Alternative)

Intersection #100 Pomona Ave/16th St

Cycle (sec):	100	Critical Vol./Cap.(X):	0.026
Loss Time (sec):	0 (Y+R=4.0 sec)	Average Delay (sec/veh):	xxxxxx
Optimal Cycle:	15	Level Of Service:	A

Street Name:	Pomona Avenue						16th Street					
Approach:	North Bound			South Bound			East Bound			West Bound		
Movement:	L -	T -	R	L -	T -	R	L -	T -	R	L -	T -	R
Control:	Permitted			Permitted			Permitted			Permitted		
Rights:	Include			Include			Include			Include		
Min. Green:	0	0	0	0	0	0	0	0	0	0	0	0
Lanes:	0 0	0 0	0	1 0	0 1	0	1 0	0 1	0	0 0	0 1	0
Volume Module:												
Base Vol:	0	0	0	37	30	11	0	-200	0	0	-200	0
Growth Adj:	1.00	1.00	1.00	1.00	1.00	1.00	1.00	1.00	1.00	1.00	1.00	1.00
Initial Bse:	0	0	0	37	30	11	0	-200	0	0	-200	0
Added Vol:	0	0	0	0	0	0	0	0	0	0	0	0
PasserByVol:	0	0	0	0	0	0	0	0	0	0	0	0
Initial Fut:	0	0	0	37	30	11	0	-200	0	0	-200	0
User Adj:	1.00	1.00	1.00	1.00	1.00	1.00	1.00	0.00	1.00	1.00	0.00	1.00
PHF Adj:	1.00	1.00	1.00	1.00	1.00	1.00	1.00	0.00	1.00	1.00	0.00	1.00
PHF Volume:	0	0	0	37	30	11	0	0	0	0	0	0
Reduct Vol:	0	0	0	0	0	0	0	0	0	0	0	0
Reduced Vol:	0	0	0	37	30	11	0	0	0	0	0	0
PCE Adj:	1.00	1.00	1.00	1.00	1.00	1.00	1.00	0.00	1.00	1.00	0.00	1.00
MLF Adj:	1.00	1.00	1.00	1.00	1.00	1.00	1.00	0.00	1.00	1.00	0.00	1.00
FinalVolume:	0	0	0	37	30	11	0	0	0	0	0	0
Saturation Flow Module:												
Sat/Lane:	1600	1600	1600	1600	1600	1600	1600	1600	1600	1600	1600	1600
Adjustment:	1.00	1.00	1.00	1.00	1.00	1.00	1.00	1.00	1.00	1.00	1.00	1.00
Lanes:	0.00	0.00	0.00	1.00	0.73	0.27	1.00	1.00	0.00	0.00	1.00	0.00
Final Sat.:	0	0	0	1600	1171	429	1600	1600	0	0	1600	0
Capacity Analysis Module:												
Vol/Sat:	0.00	0.00	0.00	0.02	0.03	0.03	0.00	0.00	0.00	0.00	0.00	0.00
Crit Moves:					****							

Newport Banning Ranch
Existing Conditions - ICU
PM Peak Hour

Scenario Report

Scenario:	Existing PM ICU
Command:	Existing PM ICU
Volume:	Existing No Project PM
Geometry:	Existing ICU
Impact Fee:	Default Impact Fee
Trip Generation:	None
Trip Distribution:	None
Paths:	None
Routes:	Default Route
Configuration:	ICU

Newport Banning Ranch
Existing Conditions - ICU
PM Peak Hour

Level Of Service Computation Report
2000 HCM 4-Way Stop Method (Future Volume Alternative)

Intersection #1 Monrovia Ave/16th St

Cycle (sec):	100	Critical Vol./Cap.(X):	0.180
Loss Time (sec):	0 (Y+R=4.0 sec)	Average Delay (sec/veh):	8.2
Optimal Cycle:	0	Level Of Service:	A

Street Name:	Monrovia Avenue						16th Street					
Approach:	North Bound			South Bound			East Bound			West Bound		
Movement:	L - T - R			L - T - R			L - T - R			L - T - R		
Control:	Stop Sign			Stop Sign			Stop Sign			Stop Sign		
Rights:	Include			Include			Include			Include		
Min. Green:	0	0	0	0	0	0	0	0	0	0	0	0
Lanes:	0 0	1! 0	0	0 0	1! 0	0	0 0	1! 0	0	0 0	1! 0	0
Volume Module:												
Base Vol:	8	73	23	29	95	17	37	70	21	18	23	31
Growth Adj:	1.00	1.00	1.00	1.00	1.00	1.00	1.00	1.00	1.00	1.00	1.00	1.00
Initial Bse:	8	73	23	29	95	17	37	70	21	18	23	31
Added Vol:	0	0	0	0	0	0	0	0	0	0	0	0
PasserByVol:	0	0	0	0	0	0	0	0	0	0	0	0
Initial Fut:	8	73	23	29	95	17	37	70	21	18	23	31
User Adj:	1.00	1.00	1.00	1.00	1.00	1.00	1.00	1.00	1.00	1.00	1.00	1.00
PHF Adj:	1.00	1.00	1.00	1.00	1.00	1.00	1.00	1.00	1.00	1.00	1.00	1.00
PHF Volume:	8	73	23	29	95	17	37	70	21	18	23	31
Reduct Vol:	0	0	0	0	0	0	0	0	0	0	0	0
Reduced Vol:	8	73	23	29	95	17	37	70	21	18	23	31
PCE Adj:	1.00	1.00	1.00	1.00	1.00	1.00	1.00	1.00	1.00	1.00	1.00	1.00
MLF Adj:	1.00	1.00	1.00	1.00	1.00	1.00	1.00	1.00	1.00	1.00	1.00	1.00
FinalVolume:	8	73	23	29	95	17	37	70	21	18	23	31
Saturation Flow Module:												
Adjustment:	1.00	1.00	1.00	1.00	1.00	1.00	1.00	1.00	1.00	1.00	1.00	1.00
Lanes:	0.08	0.70	0.22	0.21	0.67	0.12	0.29	0.55	0.16	0.25	0.32	0.43
Final Sat.:	60	551	174	161	527	94	222	420	126	194	248	335
Capacity Analysis Module:												
Vol/Sat:	0.13	0.13	0.13	0.18	0.18	0.18	0.17	0.17	0.17	0.09	0.09	0.09
Crit Moves:		****			****			****			****	
Delay/Veh:	8.0	8.0	8.0	8.4	8.4	8.4	8.3	8.3	8.3	7.8	7.8	7.8
Delay Adj:	1.00	1.00	1.00	1.00	1.00	1.00	1.00	1.00	1.00	1.00	1.00	1.00
AdjDel/Veh:	8.0	8.0	8.0	8.4	8.4	8.4	8.3	8.3	8.3	7.8	7.8	7.8
LOS by Move:	A	A	A	A	A	A	A	A	A	A	A	A
ApproachDel:	8.0			8.4			8.3			7.8		
Delay Adj:	1.00			1.00			1.00			1.00		
ApprAdjDel:	8.0			8.4			8.3			7.8		
LOS by Appr:	A			A			A			A		
AllWayAvgQ:	0.1	0.1	0.1	0.2	0.2	0.2	0.2	0.2	0.2	0.1	0.1	0.1

Newport Banning Ranch
Existing Conditions - ICU
PM Peak Hour

Note: Queue reported is the number of cars per lane.

Newport Banning Ranch
Existing Conditions - ICU
PM Peak Hour

Level Of Service Computation Report
ICU 1(Loss as Cycle Length %) Method (Future Volume Alternative)

Intersection #2 Placentia Ave/15th St

Cycle (sec):	100	Critical Vol./Cap.(X):	0.343
Loss Time (sec):	0 (Y+R=4.0 sec)	Average Delay (sec/veh):	xxxxxx
Optimal Cycle:	35	Level Of Service:	A

Street Name:	Placentia Ave						15th Street					
Approach:	North Bound			South Bound			East Bound			West Bound		
Movement:	L -	T -	R	L -	T -	R	L -	T -	R	L -	T -	R
Control:	Prot+Permit			Prot+Permit			Split Phase			Split Phase		
Rights:	Include			Include			Include			Include		
Min. Green:	0	0	0	0	0	0	0	0	0	0	0	0
Lanes:	1 0	1 1	0	1 0	1 1	0	0 0	1! 0	0	0 1	0 0	1
Volume Module:												
Base Vol:	71	440	17	14	394	30	27	23	132	10	48	84
Growth Adj:	1.00	1.00	1.00	1.00	1.00	1.00	1.00	1.00	1.00	1.00	1.00	1.00
Initial Bse:	71	440	17	14	394	30	27	23	132	10	48	84
Added Vol:	0	0	0	0	0	0	0	0	0	0	0	0
PasserByVol:	0	0	0	0	0	0	0	0	0	0	0	0
Initial Fut:	71	440	17	14	394	30	27	23	132	10	48	84
User Adj:	1.00	1.00	1.00	1.00	1.00	1.00	1.00	1.00	1.00	1.00	1.00	1.00
PHF Adj:	1.00	1.00	1.00	1.00	1.00	1.00	1.00	1.00	1.00	1.00	1.00	1.00
PHF Volume:	71	440	17	14	394	30	27	23	132	10	48	84
Reduct Vol:	0	0	0	0	0	0	0	0	0	0	0	0
Reduced Vol:	71	440	17	14	394	30	27	23	132	10	48	84
PCE Adj:	1.00	1.00	1.00	1.00	1.00	1.00	1.00	1.00	1.00	1.00	1.00	1.00
MLF Adj:	1.00	1.00	1.00	1.00	1.00	1.00	1.00	1.00	1.00	1.00	1.00	1.00
FinalVolume:	71	440	17	14	394	30	27	23	132	10	48	84
Saturation Flow Module:												
Sat/Lane:	1600	1600	1600	1600	1600	1600	1600	1600	1600	1600	1600	1600
Adjustment:	1.00	1.00	1.00	1.00	1.00	1.00	1.00	1.00	1.00	1.00	1.00	1.00
Lanes:	1.00	1.93	0.07	1.00	1.86	0.14	0.15	0.13	0.72	0.17	0.83	1.00
Final Sat.:	1600	3081	119	1600	2974	226	237	202	1160	276	1324	1600
Capacity Analysis Module:												
Vol/Sat:	0.04	0.14	0.14	0.01	0.13	0.13	0.11	0.11	0.11	0.04	0.04	0.05
Crit Moves:	****				****			****				****

Newport Banning Ranch
Existing Conditions - ICU
PM Peak Hour

Level Of Service Computation Report
2000 HCM Unsignalized Method (Future Volume Alternative)

Intersection #3 Superior Ave/15th St

Average Delay (sec/veh): 1.1 Worst Case Level Of Service: C[22.9]

Street Name:	Superior Avenue						15th Street					
Approach:	North Bound			South Bound			East Bound			West Bound		
Movement:	L -	T -	R	L -	T -	R	L -	T -	R	L -	T -	R
Control:	Uncontrolled			Uncontrolled			Stop Sign			Stop Sign		
Rights:	Include			Include			Include			Include		
Lanes:	1 0	2 0	0	0 0	1 1	0	1 0	0 0	1	0 0	0 0	0
Volume Module:												
Base Vol:	35	593	0	0	786	92	35	0	24	0	0	0
Growth Adj:	1.00	1.00	1.00	1.00	1.00	1.00	1.00	1.00	1.00	1.00	1.00	1.00
Initial Bse:	35	593	0	0	786	92	35	0	24	0	0	0
Added Vol:	0	0	0	0	0	0	0	0	0	0	0	0
PasserByVol:	0	0	0	0	0	0	0	0	0	0	0	0
Initial Fut:	35	593	0	0	786	92	35	0	24	0	0	0
User Adj:	1.00	1.00	1.00	1.00	1.00	1.00	1.00	1.00	1.00	1.00	1.00	1.00
PHF Adj:	1.00	1.00	1.00	1.00	1.00	1.00	1.00	1.00	1.00	1.00	1.00	1.00
PHF Volume:	35	593	0	0	786	92	35	0	24	0	0	0
Reduct Vol:	0	0	0	0	0	0	0	0	0	0	0	0
FinalVolume:	35	593	0	0	786	92	35	0	24	0	0	0
Critical Gap Module:												
Critical Gp:	4.1	xxxx	xxxxx	xxxxx	xxxx	xxxxx	6.8	xxxx	6.9	xxxxx	xxxx	xxxxx
FollowUpTim:	2.2	xxxx	xxxxx	xxxxx	xxxx	xxxxx	3.5	xxxx	3.3	xxxxx	xxxx	xxxxx
Capacity Module:												
Cnflict Vol:	878	xxxx	xxxxx	xxxx	xxxx	xxxxx	1199	xxxx	439	xxxx	xxxx	xxxxx
Potent Cap.:	778	xxxx	xxxxx	xxxx	xxxx	xxxxx	181	xxxx	571	xxxx	xxxx	xxxxx
Move Cap.:	778	xxxx	xxxxx	xxxx	xxxx	xxxxx	175	xxxx	571	xxxx	xxxx	xxxxx
Volume/Cap:	0.04	xxxx	xxxx	xxxx	xxxx	xxxx	0.20	xxxx	0.04	xxxx	xxxx	xxxx
Level Of Service Module:												
2Way95thQ:	0.1	xxxx	xxxxx	xxxx	xxxx	xxxxx	0.7	xxxx	0.1	xxxx	xxxx	xxxxx
Control Del:	9.8	xxxx	xxxxx	xxxxx	xxxx	xxxxx	30.7	xxxx	11.6	xxxxx	xxxx	xxxxx
LOS by Move:	A	*	*	*	*	*	D	*	B	*	*	*
Movement:	LT -	LTR -	RT	LT -	LTR -	RT	LT -	LTR -	RT	LT -	LTR -	RT
Shared Cap.:	xxxx	xxxx	xxxxx	xxxx	xxxx	xxxxx	xxxx	xxxx	xxxxx	xxxx	xxxx	xxxxx
SharedQueue:	xxxxx	xxxx	xxxxx	xxxxx	xxxx	xxxxx	xxxxx	xxxx	xxxxx	xxxxx	xxxx	xxxxx
Shrd ConDel:	xxxxx	xxxx	xxxxx	xxxxx	xxxx	xxxxx	xxxxx	xxxx	xxxxx	xxxxx	xxxx	xxxxx
Shared LOS:	*	*	*	*	*	*	*	*	*	*	*	*
ApproachDel:	xxxxxx			xxxxxx			22.9			xxxxxx		
ApproachLOS:	*			*			C			*		

Note: Queue reported is the number of cars per lane.

Newport Banning Ranch
Existing Conditions - ICU
PM Peak Hour

Level Of Service Computation Report
ICU 1(Loss as Cycle Length %) Method (Future Volume Alternative)

Intersection #4 Superior Ave/Placentia Ave

Cycle (sec):	100	Critical Vol./Cap.(X):	0.574
Loss Time (sec):	0 (Y+R=4.0 sec)	Average Delay (sec/veh):	xxxxxx
Optimal Cycle:	44	Level Of Service:	A

Street Name:	Superior Avenue						Placentia Avenue					
Approach:	North Bound			South Bound			East Bound			West Bound		
Movement:	L - T - R			L - T - R			L - T - R			L - T - R		
Control:	Protected			Protected			Permitted			Permitted		
Rights:	Include			Include			Include			Include		
Min. Green:	0	0	0	0	0	0	0	0	0	0	0	0
Lanes:	1 0	1 1	0	1 0	1 1	0	1 0	1 0	1	0 1	0 1	0
Volume Module:												
Base Vol:	224	419	22	57	664	11	11	166	316	41	287	86
Growth Adj:	1.00	1.00	1.00	1.00	1.00	1.00	1.00	1.00	1.00	1.00	1.00	1.00
Initial Bse:	224	419	22	57	664	11	11	166	316	41	287	86
Added Vol:	0	0	0	0	0	0	0	0	0	0	0	0
PasserByVol:	0	0	0	0	0	0	0	0	0	0	0	0
Initial Fut:	224	419	22	57	664	11	11	166	316	41	287	86
User Adj:	1.00	1.00	1.00	1.00	1.00	1.00	1.00	1.00	1.00	1.00	1.00	1.00
PHF Adj:	1.00	1.00	1.00	1.00	1.00	1.00	1.00	1.00	1.00	1.00	1.00	1.00
PHF Volume:	224	419	22	57	664	11	11	166	316	41	287	86
Reduct Vol:	0	0	0	0	0	0	0	0	0	0	0	0
Reduced Vol:	224	419	22	57	664	11	11	166	316	41	287	86
PCE Adj:	1.00	1.00	1.00	1.00	1.00	1.00	1.00	1.00	1.00	1.00	1.00	1.00
MLF Adj:	1.00	1.00	1.00	1.00	1.00	1.00	1.00	1.00	1.00	1.00	1.00	1.00
FinalVolume:	224	419	22	57	664	11	11	166	316	41	287	86
Saturation Flow Module:												
Sat/Lane:	1600	1600	1600	1600	1600	1600	1600	1600	1600	1600	1600	1600
Adjustment:	1.00	1.00	1.00	1.00	1.00	1.00	1.00	1.00	1.00	1.00	1.00	1.00
Lanes:	1.00	1.90	0.10	1.00	1.97	0.03	1.00	1.00	1.00	0.20	1.39	0.41
Final Sat.:	1600	3040	160	1600	3148	52	1600	1600	1600	317	2218	665
Capacity Analysis Module:												
Vol/Sat:	0.14	0.14	0.14	0.04	0.21	0.21	0.01	0.10	0.20	0.03	0.13	0.13
Crit Moves:	****				****				****	****		

Newport Banning Ranch
Existing Conditions - ICU
PM Peak Hour

Level Of Service Computation Report
ICU 1(Loss as Cycle Length %) Method (Future Volume Alternative)

Intersection #5 Hospital Rd/Newport Blvd

Cycle (sec):	120	Critical Vol./Cap.(X):	0.581
Loss Time (sec):	0 (Y+R=4.0 sec)	Average Delay (sec/veh):	xxxxxx
Optimal Cycle:	54	Level Of Service:	A

Street Name:	Newport Boulevard						Hospital Road					
Approach:	North Bound			South Bound			East Bound			West Bound		
Movement:	L - T - R			L - T - R			L - T - R			L - T - R		
Control:	Protected			Protected			Protected			Protected		
Rights:	Include			Include			Include			Include		
Min. Green:	0	0	0	0	0	0	0	0	0	0	0	0
Lanes:	1 0	3 0	1	1 0	3 0	1	2 0	1 0	1	1 0	1 1	0
Volume Module:												
Base Vol:	117	1215	55	48	1513	205	293	135	187	121	178	38
Growth Adj:	1.00	1.00	1.00	1.00	1.00	1.00	1.00	1.00	1.00	1.00	1.00	1.00
Initial Bse:	117	1215	55	48	1513	205	293	135	187	121	178	38
Added Vol:	0	0	0	0	0	0	0	0	0	0	0	0
PasserByVol:	0	0	0	0	0	0	0	0	0	0	0	0
Initial Fut:	117	1215	55	48	1513	205	293	135	187	121	178	38
User Adj:	1.00	1.00	1.00	1.00	1.00	1.00	1.00	1.00	1.00	1.00	1.00	1.00
PHF Adj:	1.00	1.00	1.00	1.00	1.00	1.00	1.00	1.00	1.00	1.00	1.00	1.00
PHF Volume:	117	1215	55	48	1513	205	293	135	187	121	178	38
Reduct Vol:	0	0	0	0	0	0	0	0	0	0	0	0
Reduced Vol:	117	1215	55	48	1513	205	293	135	187	121	178	38
PCE Adj:	1.00	1.00	1.00	1.00	1.00	1.00	1.00	1.00	1.00	1.00	1.00	1.00
MLF Adj:	1.00	1.00	1.00	1.00	1.00	1.00	1.00	1.00	1.00	1.00	1.00	1.00
FinalVolume:	117	1215	55	48	1513	205	293	135	187	121	178	38
Saturation Flow Module:												
Sat/Lane:	1600	1600	1600	1600	1600	1600	1600	1600	1600	1600	1600	1600
Adjustment:	1.00	1.00	1.00	1.00	1.00	1.00	1.00	1.00	1.00	1.00	1.00	1.00
Lanes:	1.00	3.00	1.00	1.00	3.00	1.00	2.00	1.00	1.00	1.00	1.65	0.35
Final Sat.:	1600	4800	1600	1600	4800	1600	3200	1600	1600	1600	2637	563
Capacity Analysis Module:												
Vol/Sat:	0.07	0.25	0.03	0.03	0.32	0.13	0.09	0.08	0.12	0.08	0.07	0.07
Crit Moves:	****				****				****	****		

Newport Banning Ranch
Existing Conditions - ICU
PM Peak Hour

Level Of Service Computation Report
ICU 1(Loss as Cycle Length %) Method (Future Volume Alternative)

Intersection #6 Orange St/W. Coast Hwy

Cycle (sec):	120	Critical Vol./Cap.(X):	0.656
Loss Time (sec):	0 (Y+R=4.0 sec)	Average Delay (sec/veh):	xxxxxx
Optimal Cycle:	54	Level Of Service:	B

Street Name:	Orange Street						W. Coast Highway					
Approach:	North Bound			South Bound			East Bound			West Bound		
Movement:	L -	T -	R	L -	T -	R	L -	T -	R	L -	T -	R
Control:	Permitted			Permitted			Protected			Protected		
Rights:	Include			Include			Include			Include		
Min. Green:	0	0	0	0	0	0	0	0	0	0	0	0
Lanes:	0 1	0 0	1	0 1	0 0	1	1 0	2 1	0	1 0	3 0	1
Volume Module:												
Base Vol:	37	8	29	32	2	18	44	1170	19	53	2788	26
Growth Adj:	1.00	1.00	1.00	1.00	1.00	1.00	1.00	1.00	1.00	1.00	1.00	1.00
Initial Bse:	37	8	29	32	2	18	44	1170	19	53	2788	26
Added Vol:	0	0	0	0	0	0	0	0	0	0	0	0
PasserByVol:	0	0	0	0	0	0	0	0	0	0	0	0
Initial Fut:	37	8	29	32	2	18	44	1170	19	53	2788	26
User Adj:	1.00	1.00	1.00	1.00	1.00	1.00	1.00	1.00	1.00	1.00	1.00	1.00
PHF Adj:	1.00	1.00	1.00	1.00	1.00	1.00	1.00	1.00	1.00	1.00	1.00	1.00
PHF Volume:	37	8	29	32	2	18	44	1170	19	53	2788	26
Reduct Vol:	0	0	0	0	0	0	0	0	0	0	0	0
Reduced Vol:	37	8	29	32	2	18	44	1170	19	53	2788	26
PCE Adj:	1.00	1.00	1.00	1.00	1.00	1.00	1.00	1.00	1.00	1.00	1.00	1.00
MLF Adj:	1.00	1.00	1.00	1.00	1.00	1.00	1.00	1.00	1.00	1.00	1.00	1.00
FinalVolume:	37	8	29	32	2	18	44	1170	19	53	2788	26
Saturation Flow Module:												
Sat/Lane:	1600	1600	1600	1600	1600	1600	1600	1600	1600	1600	1600	1600
Adjustment:	1.00	1.00	1.00	1.00	1.00	1.00	1.00	1.00	1.00	1.00	1.00	1.00
Lanes:	0.82	0.18	1.00	0.94	0.06	1.00	1.00	2.95	0.05	1.00	3.00	1.00
Final Sat.:	1316	284	1600	1506	94	1600	1600	4723	77	1600	4800	1600
Capacity Analysis Module:												
Vol/Sat:	0.02	0.03	0.02	0.02	0.02	0.01	0.03	0.25	0.25	0.03	0.58	0.02
Crit Moves:		****		****			****				****	

Newport Banning Ranch
Existing Conditions - ICU
PM Peak Hour

Level Of Service Computation Report
ICU 1(Loss as Cycle Length %) Method (Future Volume Alternative)

Intersection #7 Prospect St/W. Coast Hwy

Cycle (sec):	120	Critical Vol./Cap.(X):	0.661
Loss Time (sec):	0 (Y+R=4.0 sec)	Average Delay (sec/veh):	xxxxxx
Optimal Cycle:	55	Level Of Service:	B

Street Name:	Prospect Street						W. Coast Highway					
Approach:	North Bound			South Bound			East Bound			West Bound		
Movement:	L -	T -	R	L -	T -	R	L -	T -	R	L -	T -	R
Control:	Permitted			Permitted			Protected			Protected		
Rights:	Include			Include			Include			Include		
Min. Green:	0	0	0	0	0	0	0	0	0	0	0	0
Lanes:	0 1	0 0	1	0 0	1! 0	0	1 0	2 1	0	1 0	2 1	0
Volume Module:												
Base Vol:	21	0	28	88	1	8	16	1279	10	23	2645	132
Growth Adj:	1.00	1.00	1.00	1.00	1.00	1.00	1.00	1.00	1.00	1.00	1.00	1.00
Initial Bse:	21	0	28	88	1	8	16	1279	10	23	2645	132
Added Vol:	0	0	0	0	0	0	0	0	0	0	0	0
PasserByVol:	0	0	0	0	0	0	0	0	0	0	0	0
Initial Fut:	21	0	28	88	1	8	16	1279	10	23	2645	132
User Adj:	1.00	1.00	1.00	1.00	1.00	1.00	1.00	1.00	1.00	1.00	1.00	1.00
PHF Adj:	1.00	1.00	1.00	1.00	1.00	1.00	1.00	1.00	1.00	1.00	1.00	1.00
PHF Volume:	21	0	28	88	1	8	16	1279	10	23	2645	132
Reduct Vol:	0	0	0	0	0	0	0	0	0	0	0	0
Reduced Vol:	21	0	28	88	1	8	16	1279	10	23	2645	132
PCE Adj:	1.00	1.00	1.00	1.00	1.00	1.00	1.00	1.00	1.00	1.00	1.00	1.00
MLF Adj:	1.00	1.00	1.00	1.00	1.00	1.00	1.00	1.00	1.00	1.00	1.00	1.00
FinalVolume:	21	0	28	88	1	8	16	1279	10	23	2645	132
Saturation Flow Module:												
Sat/Lane:	1600	1600	1600	1600	1600	1600	1600	1600	1600	1600	1600	1600
Adjustment:	1.00	1.00	1.00	1.00	1.00	1.00	1.00	1.00	1.00	1.00	1.00	1.00
Lanes:	1.00	0.00	1.00	0.91	0.01	0.08	1.00	2.98	0.02	1.00	2.86	0.14
Final Sat.:	1600	0	1600	1452	16	132	1600	4763	37	1600	4572	228
Capacity Analysis Module:												
Vol/Sat:	0.01	0.00	0.02	0.06	0.06	0.06	0.01	0.27	0.27	0.01	0.58	0.58
Crit Moves:			****	****			****				****	

Newport Banning Ranch
Existing Conditions - ICU
PM Peak Hour

Level Of Service Computation Report
ICU 1(Loss as Cycle Length %) Method (Future Volume Alternative)

Intersection #8 W. Coast Hwy/Superior Ave

Cycle (sec):	120	Critical Vol./Cap.(X):	0.649
Loss Time (sec):	0 (Y+R=4.0 sec)	Average Delay (sec/veh):	xxxxxx
Optimal Cycle:	65	Level Of Service:	B

Street Name:	Superior Avenue						W. Coast Highway					
Approach:	North Bound			South Bound			East Bound			West Bound		
Movement:	L - T - R			L - T - R			L - T - R			L - T - R		
Control:	Split Phase			Split Phase			Protected			Protected		
Rights:	Include			Ovl			Include			Include		
Min. Green:	0	0	0	0	0	0	0	0	0	0	0	0
Lanes:	1 1	0 1	0	1 1	1 0	2	2 0	3 0	1	1 0	3 1	0
Volume Module:												
Base Vol:	254	208	78	228	243	710	258	986	243	226	1854	162
Growth Adj:	1.00	1.00	1.00	1.00	1.00	1.00	1.00	1.00	1.00	1.00	1.00	1.00
Initial Bse:	254	208	78	228	243	710	258	986	243	226	1854	162
Added Vol:	0	0	0	0	0	0	0	0	0	0	0	0
PasserByVol:	0	0	0	0	0	0	0	0	0	0	0	0
Initial Fut:	254	208	78	228	243	710	258	986	243	226	1854	162
User Adj:	1.00	1.00	1.00	1.00	1.00	1.00	1.00	1.00	1.00	1.00	1.00	1.00
PHF Adj:	1.00	1.00	1.00	1.00	1.00	1.00	1.00	1.00	1.00	1.00	1.00	1.00
PHF Volume:	254	208	78	228	243	710	258	986	243	226	1854	162
Reduct Vol:	0	0	0	0	0	0	0	0	0	0	0	0
Reduced Vol:	254	208	78	228	243	710	258	986	243	226	1854	162
PCE Adj:	1.00	1.00	1.00	1.00	1.00	1.00	1.00	1.00	1.00	1.00	1.00	1.00
MLF Adj:	1.00	1.00	1.00	1.00	1.00	1.00	1.00	1.00	1.00	1.00	1.00	1.00
FinalVolume:	254	208	78	228	243	710	258	986	243	226	1854	162
OvlAdjVol:						452						
Saturation Flow Module:												
Sat/Lane:	1600	1600	1600	1600	1600	1600	1600	1600	1600	1600	1600	1600
Adjustment:	1.00	1.00	1.00	1.00	1.00	1.00	1.00	1.00	1.00	1.00	1.00	1.00
Lanes:	1.41	1.16	0.43	1.45	1.55	2.00	2.00	3.00	1.00	1.00	3.68	0.32
Final Sat.:	2257	1849	694	2324	2476	3200	3200	4800	1600	1600	5886	514
Capacity Analysis Module:												
Vol/Sat:	0.11	0.11	0.11	0.10	0.10	0.22	0.08	0.21	0.15	0.14	0.31	0.32
OvlAdjV/S:						0.14						
Crit Moves:	****					****	****					****

Newport Banning Ranch
Existing Conditions - ICU
PM Peak Hour

Level Of Service Computation Report
ICU 1(Loss as Cycle Length %) Method (Future Volume Alternative)

Intersection #9 Newport Blvd/W. Coast Hwy

Cycle (sec):	120	Critical Vol./Cap.(X):	0.640
Loss Time (sec):	0 (Y+R=4.0 sec)	Average Delay (sec/veh):	xxxxxx
Optimal Cycle:	63	Level Of Service:	B

Street Name:	Newport Boulevard						W. Coast Highway					
Approach:	North Bound			South Bound			East Bound			West Bound		
Movement:	L -	T -	R	L -	T -	R	L -	T -	R	L -	T -	R
Control:	Protected			Protected			Protected			Protected		
Rights:	Include			Include			Ignore			Ignore		
Min. Green:	0	0	0	0	0	0	0	0	0	0	0	0
Lanes:	0 0	0 0	0	2 0	0 0	1	0 0	2 0	1	0 0	3 0	1
Volume Module:												
Base Vol:	0	0	0	586	0	393	0	1261	159	0	1823	487
Growth Adj:	1.00	1.00	1.00	1.00	1.00	1.00	1.00	1.00	1.00	1.00	1.00	1.00
Initial Bse:	0	0	0	586	0	393	0	1261	159	0	1823	487
Added Vol:	0	0	0	0	0	0	0	0	0	0	0	0
PasserByVol:	0	0	0	0	0	0	0	0	0	0	0	0
Initial Fut:	0	0	0	586	0	393	0	1261	159	0	1823	487
User Adj:	1.00	1.00	1.00	1.00	1.00	1.00	1.00	1.00	0.00	1.00	1.00	0.00
PHF Adj:	1.00	1.00	1.00	1.00	1.00	1.00	1.00	1.00	0.00	1.00	1.00	0.00
PHF Volume:	0	0	0	586	0	393	0	1261	0	0	1823	0
Reduct Vol:	0	0	0	0	0	0	0	0	0	0	0	0
Reduced Vol:	0	0	0	586	0	393	0	1261	0	0	1823	0
PCE Adj:	1.00	1.00	1.00	1.00	1.00	1.00	1.00	1.00	0.00	1.00	1.00	0.00
MLF Adj:	1.00	1.00	1.00	1.00	1.00	1.00	1.00	1.00	0.00	1.00	1.00	0.00
FinalVolume:	0	0	0	586	0	393	0	1261	0	0	1823	0
Saturation Flow Module:												
Sat/Lane:	1600	1600	1600	1600	1600	1600	1600	1600	1600	1600	1600	1600
Adjustment:	1.00	1.00	1.00	1.00	1.00	1.00	1.00	1.00	1.00	1.00	1.00	1.00
Lanes:	0.00	0.00	0.00	2.00	0.00	1.00	0.00	2.00	1.00	0.00	3.00	1.00
Final Sat.:	0	0	0	3200	0	1600	0	3200	1600	0	4800	1600
Capacity Analysis Module:												
Vol/Sat:	0.00	0.00	0.00	0.18	0.00	0.25	0.00	0.39	0.00	0.00	0.38	0.00
Crit Moves:						****		****		****		

Newport Banning Ranch
Existing Conditions - ICU
PM Peak Hour

Level Of Service Computation Report
ICU 1(Loss as Cycle Length %) Method (Future Volume Alternative)

Intersection #10 Riverside Ave/W. Coast Hwy

Cycle (sec):	120	Critical Vol./Cap.(X):	0.708
Loss Time (sec):	0 (Y+R=4.0 sec)	Average Delay (sec/veh):	xxxxxx
Optimal Cycle:	64	Level Of Service:	C

Street Name:	Riverside Avenue						W. Coast Highway					
Approach:	North Bound			South Bound			East Bound			West Bound		
Movement:	L -	T -	R	L -	T -	R	L -	T -	R	L -	T -	R
Control:	Permitted			Permitted			Protected			Protected		
Rights:	Include			Ovl			Include			Include		
Min. Green:	0	0	0	0	0	0	0	0	0	0	0	0
Lanes:	0 0	1! 0	0	0 1	0 0	1	1 0	1 1	0	1 0	3 0	1
Volume Module:												
Base Vol:	10	11	2	98	2	404	244	1373	5	11	2155	70
Growth Adj:	1.00	1.00	1.00	1.00	1.00	1.00	1.00	1.00	1.00	1.00	1.00	1.00
Initial Bse:	10	11	2	98	2	404	244	1373	5	11	2155	70
Added Vol:	0	0	0	0	0	0	0	0	0	0	0	0
PasserByVol:	0	0	0	0	0	0	0	0	0	0	0	0
Initial Fut:	10	11	2	98	2	404	244	1373	5	11	2155	70
User Adj:	1.00	1.00	1.00	1.00	1.00	1.00	1.00	1.00	1.00	1.00	1.00	1.00
PHF Adj:	1.00	1.00	1.00	1.00	1.00	1.00	1.00	1.00	1.00	1.00	1.00	1.00
PHF Volume:	10	11	2	98	2	404	244	1373	5	11	2155	70
Reduct Vol:	0	0	0	0	0	0	0	0	0	0	0	0
Reduced Vol:	10	11	2	98	2	404	244	1373	5	11	2155	70
PCE Adj:	1.00	1.00	1.00	1.00	1.00	1.00	1.00	1.00	1.00	1.00	1.00	1.00
MLF Adj:	1.00	1.00	1.00	1.00	1.00	1.00	1.00	1.00	1.00	1.00	1.00	1.00
FinalVolume:	10	11	2	98	2	404	244	1373	5	11	2155	70
OvlAdjVol:						160						
Saturation Flow Module:												
Sat/Lane:	1600	1600	1600	1600	1600	1600	1600	1600	1600	1600	1600	1600
Adjustment:	1.00	1.00	1.00	1.00	1.00	1.00	1.00	1.00	1.00	1.00	1.00	1.00
Lanes:	0.43	0.48	0.09	0.98	0.02	1.00	1.00	1.99	0.01	1.00	3.00	1.00
Final Sat.:	696	765	139	1568	32	1600	1600	3188	12	1600	4800	1600
Capacity Analysis Module:												
Vol/Sat:	0.01	0.01	0.01	0.06	0.06	0.25	0.15	0.43	0.43	0.01	0.45	0.04
OvlAdjV/S:						0.10						
Crit Moves:	****					****	****				****	

Newport Banning Ranch
Existing Conditions - ICU
PM Peak Hour

Level Of Service Computation Report
ICU 1(Loss as Cycle Length %) Method (Future Volume Alternative)

Intersection #11 Tustin Ave/W. Coast Hwy

Cycle (sec):	120	Critical Vol./Cap.(X):	0.575
Loss Time (sec):	0 (Y+R=4.0 sec)	Average Delay (sec/veh):	xxxxxx
Optimal Cycle:	44	Level Of Service:	A

Street Name:	Tustin Avenue						W. Coast Highway					
Approach:	North Bound			South Bound			East Bound			West Bound		
Movement:	L -	T -	R	L -	T -	R	L -	T -	R	L -	T -	R
Control:	Permitted			Permitted			Protected			Permitted		
Rights:	Include			Include			Include			Include		
Min. Green:	0	0	0	0	0	0	0	0	0	0	0	0
Lanes:	0 0	0 1	0	0 0	1! 0	0	1 0	1 1	0	0 0	3 0	1
Volume Module:												
Base Vol:	0	1	2	55	0	27	94	1376	20	0	2230	52
Growth Adj:	1.00	1.00	1.00	1.00	1.00	1.00	1.00	1.00	1.00	1.00	1.00	1.00
Initial Bse:	0	1	2	55	0	27	94	1376	20	0	2230	52
Added Vol:	0	0	0	0	0	0	0	0	0	0	0	0
PasserByVol:	0	0	0	0	0	0	0	0	0	0	0	0
Initial Fut:	0	1	2	55	0	27	94	1376	20	0	2230	52
User Adj:	1.00	1.00	1.00	1.00	1.00	1.00	1.00	1.00	1.00	1.00	1.00	1.00
PHF Adj:	1.00	1.00	1.00	1.00	1.00	1.00	1.00	1.00	1.00	1.00	1.00	1.00
PHF Volume:	0	1	2	55	0	27	94	1376	20	0	2230	52
Reduct Vol:	0	0	0	0	0	0	0	0	0	0	0	0
Reduced Vol:	0	1	2	55	0	27	94	1376	20	0	2230	52
PCE Adj:	1.00	1.00	1.00	1.00	1.00	1.00	1.00	1.00	1.00	1.00	1.00	1.00
MLF Adj:	1.00	1.00	1.00	1.00	1.00	1.00	1.00	1.00	1.00	1.00	1.00	1.00
FinalVolume:	0	1	2	55	0	27	94	1376	20	0	2230	52
Saturation Flow Module:												
Sat/Lane:	1600	1600	1600	1600	1600	1600	1600	1600	1600	1600	1600	1600
Adjustment:	1.00	1.00	1.00	1.00	1.00	1.00	1.00	1.00	1.00	1.00	1.00	1.00
Lanes:	0.00	0.33	0.67	0.67	0.00	0.33	1.00	1.97	0.03	0.00	3.00	1.00
Final Sat.:	0	533	1067	1073	0	527	1600	3154	46	0	4800	1600
Capacity Analysis Module:												
Vol/Sat:	0.00	0.00	0.00	0.03	0.00	0.05	0.06	0.44	0.44	0.00	0.46	0.03
Crit Moves:	****					****	****				****	

Newport Banning Ranch
Existing Conditions - ICU
PM Peak Hour

Level Of Service Computation Report
ICU 1(Loss as Cycle Length %) Method (Future Volume Alternative)

Intersection #12 Dover Dr/W. Coast Hwy

Cycle (sec):	120	Critical Vol./Cap.(X):	0.711
Loss Time (sec):	0 (Y+R=4.0 sec)	Average Delay (sec/veh):	xxxxxx
Optimal Cycle:	79	Level Of Service:	C

Street Name:	Dover Drive						W. Coast Highway					
Approach:	North Bound			South Bound			East Bound			West Bound		
Movement:	L - T - R			L - T - R			L - T - R			L - T - R		
Control:	Split Phase			Split Phase			Protected			Protected		
Rights:	Include			Include			Include			Ignore		
Min. Green:	0	0	0	0	0	0	0	0	0	0	0	0
Lanes:	1 0	1 1	0	3 0	1 0	1	2 0	2 1	0	1 0	3 0	1
Volume Module:												
Base Vol:	35	42	41	918	61	119	145	1270	25	50	2153	1021
Growth Adj:	1.00	1.00	1.00	1.00	1.00	1.00	1.00	1.00	1.00	1.00	1.00	1.00
Initial Bse:	35	42	41	918	61	119	145	1270	25	50	2153	1021
Added Vol:	0	0	0	0	0	0	0	0	0	0	0	0
PasserByVol:	0	0	0	0	0	0	0	0	0	0	0	0
Initial Fut:	35	42	41	918	61	119	145	1270	25	50	2153	1021
User Adj:	1.00	1.00	1.00	1.00	1.00	1.00	1.00	1.00	1.00	1.00	1.00	0.00
PHF Adj:	1.00	1.00	1.00	1.00	1.00	1.00	1.00	1.00	1.00	1.00	1.00	0.00
PHF Volume:	35	42	41	918	61	119	145	1270	25	50	2153	0
Reduct Vol:	0	0	0	0	0	0	0	0	0	0	0	0
Reduced Vol:	35	42	41	918	61	119	145	1270	25	50	2153	0
PCE Adj:	1.00	1.00	1.00	1.00	1.00	1.00	1.00	1.00	1.00	1.00	1.00	0.00
MLF Adj:	1.00	1.00	1.00	1.00	1.00	1.00	1.00	1.00	1.00	1.00	1.00	0.00
FinalVolume:	35	42	41	918	61	119	145	1270	25	50	2153	0
Saturation Flow Module:												
Sat/Lane:	1600	1600	1600	1600	1600	1600	1600	1600	1600	1600	1600	1600
Adjustment:	1.00	1.00	1.00	1.00	1.00	1.00	1.00	1.00	1.00	1.00	1.00	1.00
Lanes:	1.00	1.01	0.99	3.00	1.00	1.00	2.00	2.94	0.06	1.00	3.00	1.00
Final Sat.:	1600	1619	1581	4800	1600	1600	3200	4707	93	1600	4800	1600
Capacity Analysis Module:												
Vol/Sat:	0.02	0.03	0.03	0.19	0.04	0.07	0.05	0.27	0.27	0.03	0.45	0.00
Crit Moves:			****	****			****				****	

Newport Banning Ranch
Existing Conditions - ICU
PM Peak Hour

Level Of Service Computation Report
ICU 1(Loss as Cycle Length %) Method (Future Volume Alternative)

Intersection #13 Magnolia St/Hamilton Ave

Cycle (sec):	100	Critical Vol./Cap.(X):	0.535
Loss Time (sec):	5 (Y+R=4.0 sec)	Average Delay (sec/veh):	xxxxxx
Optimal Cycle:	25	Level Of Service:	A

Street Name:	Magnolia Street						Hamilton Avenue					
Approach:	North Bound			South Bound			East Bound			West Bound		
Movement:	L - T - R			L - T - R			L - T - R			L - T - R		
Control:	Prot+Permit			Prot+Permit			Permitted			Permitted		
Rights:	Include			Include			Include			Include		
Min. Green:	0	0	0	0	0	0	0	0	0	0	0	0
Lanes:	1 0	1 1	0	1 0	2 0	1	1 0	0 1	0	1 0	1 0	1
Volume Module:												
Base Vol:	100	365	55	192	247	25	9	188	71	71	413	379
Growth Adj:	1.00	1.00	1.00	1.00	1.00	1.00	1.00	1.00	1.00	1.00	1.00	1.00
Initial Bse:	100	365	55	192	247	25	9	188	71	71	413	379
Added Vol:	0	0	0	0	0	0	0	0	0	0	0	0
PasserByVol:	0	0	0	0	0	0	0	0	0	0	0	0
Initial Fut:	100	365	55	192	247	25	9	188	71	71	413	379
User Adj:	1.00	1.00	1.00	1.00	1.00	1.00	1.00	1.00	1.00	1.00	1.00	1.00
PHF Adj:	1.00	1.00	1.00	1.00	1.00	1.00	1.00	1.00	1.00	1.00	1.00	1.00
PHF Volume:	100	365	55	192	247	25	9	188	71	71	413	379
Reduct Vol:	0	0	0	0	0	0	0	0	0	0	0	0
Reduced Vol:	100	365	55	192	247	25	9	188	71	71	413	379
PCE Adj:	1.00	1.00	1.00	1.00	1.00	1.00	1.00	1.00	1.00	1.00	1.00	1.00
MLF Adj:	1.00	1.00	1.00	1.00	1.00	1.00	1.00	1.00	1.00	1.00	1.00	1.00
FinalVolume:	100	365	55	192	247	25	9	188	71	71	413	379
Saturation Flow Module:												
Sat/Lane:	1600	1600	1600	1600	1600	1600	1600	1600	1600	1600	1600	1600
Adjustment:	1.06	1.06	1.06	1.06	1.06	1.06	1.06	1.06	1.06	1.06	1.06	1.06
Lanes:	1.00	1.74	0.26	1.00	2.00	1.00	1.00	0.73	0.27	1.00	1.00	1.00
Final Sat.:	1700	2955	445	1700	3400	1700	1700	1234	466	1700	1700	1700
Capacity Analysis Module:												
Vol/Sat:	0.06	0.12	0.12	0.11	0.07	0.01	0.01	0.15	0.15	0.04	0.24	0.22
Crit Moves:		****		****			****				****	

Newport Banning Ranch
Existing Conditions - ICU
PM Peak Hour

Level Of Service Computation Report
ICU 1(Loss as Cycle Length %) Method (Future Volume Alternative)

Intersection #14 Bushard St/Hamilton Ave

Cycle (sec): 100 Critical Vol./Cap.(X): 0.528
Loss Time (sec): 5 (Y+R=4.0 sec) Average Delay (sec/veh): xxxxxx
Optimal Cycle: 25 Level Of Service: A

Street Name:	Bushard Street						Hamilton Avenue					
Approach:	North Bound			South Bound			East Bound			West Bound		
Movement:	L - T - R			L - T - R			L - T - R			L - T - R		
Control:	Permitted			Permitted			Permitted			Permitted		
Rights:	Include			Include			Include			Include		
Min. Green:	0	0	0	0	0	0	0	0	0	0	0	0
Lanes:	1 0	1 1	0	1 0	1 1	0	1 0	1 1	0	1 0	1 1	0
Volume Module:												
Base Vol:	55	265	43	117	143	39	26	355	43	44	779	251
Growth Adj:	1.00	1.00	1.00	1.00	1.00	1.00	1.00	1.00	1.00	1.00	1.00	1.00
Initial Bse:	55	265	43	117	143	39	26	355	43	44	779	251
Added Vol:	0	0	0	0	0	0	0	0	0	0	0	0
PasserByVol:	0	0	0	0	0	0	0	0	0	0	0	0
Initial Fut:	55	265	43	117	143	39	26	355	43	44	779	251
User Adj:	1.00	1.00	1.00	1.00	1.00	1.00	1.00	1.00	1.00	1.00	1.00	1.00
PHF Adj:	1.00	1.00	1.00	1.00	1.00	1.00	1.00	1.00	1.00	1.00	1.00	1.00
PHF Volume:	55	265	43	117	143	39	26	355	43	44	779	251
Reduct Vol:	0	0	0	0	0	0	0	0	0	0	0	0
Reduced Vol:	55	265	43	117	143	39	26	355	43	44	779	251
PCE Adj:	1.00	1.00	1.00	1.00	1.00	1.00	1.00	1.00	1.00	1.00	1.00	1.00
MLF Adj:	1.00	1.00	1.00	1.00	1.00	1.00	1.00	1.00	1.00	1.00	1.00	1.00
FinalVolume:	55	265	43	117	143	39	26	355	43	44	779	251
Saturation Flow Module:												
Sat/Lane:	1600	1600	1600	1600	1600	1600	1600	1600	1600	1600	1600	1600
Adjustment:	1.06	1.06	1.06	1.06	1.06	1.06	1.06	1.06	1.06	1.06	1.06	1.06
Lanes:	1.00	1.72	0.28	1.00	1.57	0.43	1.00	1.78	0.22	1.00	1.51	0.49
Final Sat.:	1700	2925	475	1700	2671	729	1700	3033	367	1700	2571	829
Capacity Analysis Module:												
Vol/Sat:	0.03	0.09	0.09	0.07	0.05	0.05	0.02	0.12	0.12	0.03	0.30	0.30
Crit Moves:		****		****			****				****	

Newport Banning Ranch
Existing Conditions - ICU
PM Peak Hour

Level Of Service Computation Report
ICU 1(Loss as Cycle Length %) Method (Future Volume Alternative)

Intersection #15 Brookhurst St/Hamilton Ave (Victoria St)

Cycle (sec):	100	Critical Vol./Cap.(X):	0.635
Loss Time (sec):	5 (Y+R=4.0 sec)	Average Delay (sec/veh):	xxxxxx
Optimal Cycle:	31	Level Of Service:	B

Street Name:	Brookhurst						Hamilton Avenue (Victoria Street)					
Approach:	North Bound			South Bound			East Bound			West Bound		
Movement:	L - T - R			L - T - R			L - T - R			L - T - R		
Control:	Protected			Protected			Prot+Permit			Prot+Permit		
Rights:	Include			Include			Include			Include		
Min. Green:	0	0	0	0	0	0	0	0	0	0	0	0
Lanes:	1 0	3 0	1	2 0	2 1	0	1 0	1 1	0	1 0	2 0	1
Volume Module:												
Base Vol:	117	581	192	397	335	106	113	353	67	277	943	489
Growth Adj:	1.00	1.00	1.00	1.00	1.00	1.00	1.00	1.00	1.00	1.00	1.00	1.00
Initial Bse:	117	581	192	397	335	106	113	353	67	277	943	489
Added Vol:	0	0	0	0	0	0	0	0	0	0	0	0
PasserByVol:	0	0	0	0	0	0	0	0	0	0	0	0
Initial Fut:	117	581	192	397	335	106	113	353	67	277	943	489
User Adj:	1.00	1.00	1.00	1.00	1.00	1.00	1.00	1.00	1.00	1.00	1.00	1.00
PHF Adj:	1.00	1.00	1.00	1.00	1.00	1.00	1.00	1.00	1.00	1.00	1.00	1.00
PHF Volume:	117	581	192	397	335	106	113	353	67	277	943	489
Reduct Vol:	0	0	0	0	0	0	0	0	0	0	0	0
Reduced Vol:	117	581	192	397	335	106	113	353	67	277	943	489
PCE Adj:	1.00	1.00	1.00	1.00	1.00	1.00	1.00	1.00	1.00	1.00	1.00	1.00
MLF Adj:	1.00	1.00	1.00	1.00	1.00	1.00	1.00	1.00	1.00	1.00	1.00	1.00
FinalVolume:	117	581	192	397	335	106	113	353	67	277	943	489
Saturation Flow Module:												
Sat/Lane:	1600	1600	1600	1600	1600	1600	1600	1600	1600	1600	1600	1600
Adjustment:	1.06	1.06	1.06	1.06	1.06	1.06	1.06	1.06	1.06	1.06	1.06	1.06
Lanes:	1.00	3.00	1.00	2.00	2.28	0.72	1.00	1.68	0.32	1.00	2.00	1.00
Final Sat.:	1700	5100	1700	3400	3874	1226	1700	2858	542	1700	3400	1700
Capacity Analysis Module:												
Vol/Sat:	0.07	0.11	0.11	0.12	0.09	0.09	0.07	0.12	0.12	0.16	0.28	0.29
Crit Moves:		****		****			****					****

Newport Banning Ranch
Existing Conditions - ICU
PM Peak Hour

Level Of Service Computation Report
ICU 1(Loss as Cycle Length %) Method (Future Volume Alternative)

Intersection #16 Magnolia St/Banning Ave

Cycle (sec):	100	Critical Vol./Cap.(X):	0.273
Loss Time (sec):	5 (Y+R=4.0 sec)	Average Delay (sec/veh):	xxxxxx
Optimal Cycle:	17	Level Of Service:	A

Street Name:	Magnolia Street						Banning Avenue					
Approach:	North Bound			South Bound			East Bound			West Bound		
Movement:	L -	T -	R	L -	T -	R	L -	T -	R	L -	T -	R
Control:	Protected			Protected			Split Phase			Split Phase		
Rights:	Include			Include			Include			Include		
Min. Green:	0	0	0	0	0	0	0	0	0	0	0	0
Lanes:	0 0	1 1	0	1 0	2 0	0	0 0	0 0	0	2 0	0 0	1
Volume Module:												
Base Vol:	0	435	60	76	300	0	0	0	0	23	0	56
Growth Adj:	1.00	1.00	1.00	1.00	1.00	1.00	1.00	1.00	1.00	1.00	1.00	1.00
Initial Bse:	0	435	60	76	300	0	0	0	0	23	0	56
Added Vol:	0	0	0	0	0	0	0	0	0	0	0	0
PasserByVol:	0	0	0	0	0	0	0	0	0	0	0	0
Initial Fut:	0	435	60	76	300	0	0	0	0	23	0	56
User Adj:	1.00	1.00	1.00	1.00	1.00	1.00	1.00	1.00	1.00	1.00	1.00	1.00
PHF Adj:	1.00	1.00	1.00	1.00	1.00	1.00	1.00	1.00	1.00	1.00	1.00	1.00
PHF Volume:	0	435	60	76	300	0	0	0	0	23	0	56
Reduct Vol:	0	0	0	0	0	0	0	0	0	0	0	0
Reduced Vol:	0	435	60	76	300	0	0	0	0	23	0	56
PCE Adj:	1.00	1.00	1.00	1.00	1.00	1.00	1.00	1.00	1.00	1.00	1.00	1.00
MLF Adj:	1.00	1.00	1.00	1.00	1.00	1.00	1.00	1.00	1.00	1.00	1.00	1.00
FinalVolume:	0	435	60	76	300	0	0	0	0	23	0	56
Saturation Flow Module:												
Sat/Lane:	1600	1600	1600	1600	1600	1600	1600	1600	1600	1600	1600	1600
Adjustment:	1.06	1.06	1.06	1.06	1.06	1.06	1.06	1.06	1.06	1.06	1.06	1.06
Lanes:	0.00	1.76	0.24	1.00	2.00	0.00	0.00	0.00	0.00	2.00	0.00	1.00
Final Sat.:	0	2988	412	1700	3400	0	0	0	0	3400	0	1700
Capacity Analysis Module:												
Vol/Sat:	0.00	0.15	0.15	0.04	0.09	0.00	0.00	0.00	0.00	0.01	0.00	0.03
Crit Moves:		****		****								****

Newport Banning Ranch
Existing Conditions - ICU
PM Peak Hour

Level Of Service Computation Report
2000 HCM 4-Way Stop Method (Future Volume Alternative)

Intersection #17 Bushard St/Banning Ave

Cycle (sec):	100	Critical Vol./Cap.(X):	0.182
Loss Time (sec):	5 (Y+R=4.0 sec)	Average Delay (sec/veh):	9.0
Optimal Cycle:	0	Level Of Service:	A

Street Name:	Bushard Street						Banning Avenue					
Approach:	North Bound			South Bound			East Bound			West Bound		
Movement:	L -	T -	R	L -	T -	R	L -	T -	R	L -	T -	R
Control:	Stop Sign			Stop Sign			Stop Sign			Stop Sign		
Rights:	Include			Include			Include			Include		
Min. Green:	0	0	0	0	0	0	0	0	0	0	0	0
Lanes:	1 0	1 1	0	1 0	1 1	0	1 0	0 1	0	1 0	0 1	0
Volume Module:												
Base Vol:	28	213	23	12	116	38	25	52	10	24	50	21
Growth Adj:	1.00	1.00	1.00	1.00	1.00	1.00	1.00	1.00	1.00	1.00	1.00	1.00
Initial Bse:	28	213	23	12	116	38	25	52	10	24	50	21
Added Vol:	0	0	0	0	0	0	0	0	0	0	0	0
PasserByVol:	0	0	0	0	0	0	0	0	0	0	0	0
Initial Fut:	28	213	23	12	116	38	25	52	10	24	50	21
User Adj:	1.00	1.00	1.00	1.00	1.00	1.00	1.00	1.00	1.00	1.00	1.00	1.00
PHF Adj:	1.00	1.00	1.00	1.00	1.00	1.00	1.00	1.00	1.00	1.00	1.00	1.00
PHF Volume:	28	213	23	12	116	38	25	52	10	24	50	21
Reduct Vol:	0	0	0	0	0	0	0	0	0	0	0	0
Reduced Vol:	28	213	23	12	116	38	25	52	10	24	50	21
PCE Adj:	1.00	1.00	1.00	1.00	1.00	1.00	1.00	1.00	1.00	1.00	1.00	1.00
MLF Adj:	1.00	1.00	1.00	1.00	1.00	1.00	1.00	1.00	1.00	1.00	1.00	1.00
FinalVolume:	28	213	23	12	116	38	25	52	10	24	50	21
Saturation Flow Module:												
Adjustment:	1.00	1.00	1.00	1.00	1.00	1.00	1.00	1.00	1.00	1.00	1.00	1.00
Lanes:	1.00	1.81	0.19	1.00	1.51	0.49	1.00	0.84	0.16	1.00	0.70	0.30
Final Sat.:	587	1170	128	565	944	322	551	511	98	553	437	184
Capacity Analysis Module:												
Vol/Sat:	0.05	0.18	0.18	0.02	0.12	0.12	0.05	0.10	0.10	0.04	0.11	0.11
Crit Moves:		****			****				****		****	
Delay/Veh:	8.9	9.2	9.1	8.9	8.9	8.6	9.2	8.9	8.9	9.1	8.8	8.8
Delay Adj:	1.00	1.00	1.00	1.00	1.00	1.00	1.00	1.00	1.00	1.00	1.00	1.00
AdjDel/Veh:	8.9	9.2	9.1	8.9	8.9	8.6	9.2	8.9	8.9	9.1	8.8	8.8
LOS by Move:	A	A	A	A	A	A	A	A	A	A	A	A
ApproachDel:	9.2			8.9			8.9			8.9		
Delay Adj:	1.00			1.00			1.00			1.00		
ApprAdjDel:	9.2			8.9			8.9			8.9		
LOS by Appr:	A			A			A			A		
AllWayAvgQ:	0.0	0.2	0.2	0.0	0.1	0.1	0.0	0.1	0.1	0.0	0.1	0.1

Newport Banning Ranch
Existing Conditions - ICU
PM Peak Hour

Note: Queue reported is the number of cars per lane.

Newport Banning Ranch
Existing Conditions - ICU
PM Peak Hour

Level Of Service Computation Report
ICU 1(Loss as Cycle Length %) Method (Future Volume Alternative)

Intersection #18 Brookhurst St/Banning Ave

Cycle (sec):	100	Critical Vol./Cap.(X):	0.237
Loss Time (sec):	5 (Y+R=4.0 sec)	Average Delay (sec/veh):	xxxxxx
Optimal Cycle:	16	Level Of Service:	A

Street Name:	Brookhurst Street						Banning Avenue					
Approach:	North Bound			South Bound			East Bound			West Bound		
Movement:	L -	T -	R	L -	T -	R	L -	T -	R	L -	T -	R
Control:	Protected			Protected			Split Phase			Split Phase		
Rights:	Include			Include			Include			Include		
Min. Green:	0	0	0	0	0	0	0	0	0	0	0	0
Lanes:	1 0	3 0	0	0 0	2 1	0	1 0	0 0	1	0 0	0 0	0
Volume Module:												
Base Vol:	12	769	0	0	509	100	61	0	7	0	0	0
Growth Adj:	1.00	1.00	1.00	1.00	1.00	1.00	1.00	1.00	1.00	1.00	1.00	1.00
Initial Bse:	12	769	0	0	509	100	61	0	7	0	0	0
Added Vol:	0	0	0	0	0	0	0	0	0	0	0	0
PasserByVol:	0	0	0	0	0	0	0	0	0	0	0	0
Initial Fut:	12	769	0	0	509	100	61	0	7	0	0	0
User Adj:	1.00	1.00	1.00	1.00	1.00	1.00	1.00	1.00	1.00	1.00	1.00	1.00
PHF Adj:	1.00	1.00	1.00	1.00	1.00	1.00	1.00	1.00	1.00	1.00	1.00	1.00
PHF Volume:	12	769	0	0	509	100	61	0	7	0	0	0
Reduct Vol:	0	0	0	0	0	0	0	0	0	0	0	0
Reduced Vol:	12	769	0	0	509	100	61	0	7	0	0	0
PCE Adj:	1.00	1.00	1.00	1.00	1.00	1.00	1.00	1.00	1.00	1.00	1.00	1.00
MLF Adj:	1.00	1.00	1.00	1.00	1.00	1.00	1.00	1.00	1.00	1.00	1.00	1.00
FinalVolume:	12	769	0	0	509	100	61	0	7	0	0	0
Saturation Flow Module:												
Sat/Lane:	1600	1600	1600	1600	1600	1600	1600	1600	1600	1600	1600	1600
Adjustment:	1.06	1.06	1.06	1.06	1.06	1.06	1.06	1.06	1.06	1.06	1.06	1.06
Lanes:	1.00	3.00	0.00	0.00	2.51	0.49	1.00	0.00	1.00	0.00	0.00	0.00
Final Sat.:	1700	5100	0	0	4263	837	1700	0	1700	0	0	0
Capacity Analysis Module:												
Vol/Sat:	0.01	0.15	0.00	0.00	0.12	0.12	0.04	0.00	0.00	0.00	0.00	0.00
Crit Moves:		****		****			****					

Newport Banning Ranch
Existing Conditions - ICU
PM Peak Hour

Level Of Service Computation Report
ICU 1(Loss as Cycle Length %) Method (Future Volume Alternative)

Intersection #19 Magnolia St/PCH

Cycle (sec):	120	Critical Vol./Cap.(X):	0.576
Loss Time (sec):	6 (Y+R=4.0 sec)	Average Delay (sec/veh):	xxxxxx
Optimal Cycle:	30	Level Of Service:	A

Street Name:	Magnolia Street									Pacific Coast Highway											
Approach:	North Bound					South Bound					East Bound					West Bound					
Movement:	L	-	T	-	R	L	-	T	-	R	L	-	T	-	R	L	-	T	-	R	
Control:	Split Phase					Split Phase					Protected					Protected					
Rights:	Include					Include					Include					Include					
Min. Green:	0	0	0			0	0	0			0	0	0			0	0	0			
Lanes:	1	0	0	1	0	1	1	0	0	1	1	0	3	0	1	1	0	3	0	1	
Volume Module:																					
Base Vol:	10	22	15	101	30	152	137	885	17	30	1706	295									
Growth Adj:	1.00	1.00	1.00	1.00	1.00	1.00	1.00	1.00	1.00	1.00	1.00	1.00									
Initial Bse:	10	22	15	101	30	152	137	885	17	30	1706	295									
Added Vol:	0	0	0	0	0	0	0	0	0	0	0	0									
PasserByVol:	0	0	0	0	0	0	0	0	0	0	0	0									
Initial Fut:	10	22	15	101	30	152	137	885	17	30	1706	295									
User Adj:	1.00	1.00	1.00	1.00	1.00	1.00	1.00	1.00	1.00	1.00	1.00	1.00									
PHF Adj:	1.00	1.00	1.00	1.00	1.00	1.00	1.00	1.00	1.00	1.00	1.00	1.00									
PHF Volume:	10	22	15	101	30	152	137	885	17	30	1706	295									
Reduct Vol:	0	0	0	0	0	0	0	0	0	0	0	0									
Reduced Vol:	10	22	15	101	30	152	137	885	17	30	1706	295									
PCE Adj:	1.00	1.00	1.00	1.00	1.00	1.00	1.00	1.00	1.00	1.00	1.00	1.00									
MLF Adj:	1.00	1.00	1.00	1.00	1.00	1.00	1.00	1.00	1.00	1.00	1.00	1.00									
FinalVolume:	10	22	15	101	30	152	137	885	17	30	1706	295									
Saturation Flow Module:																					
Sat/Lane:	1600	1600	1600	1600	1600	1600	1600	1600	1600	1600	1600	1600									
Adjustment:	1.06	1.06	1.06	1.06	1.06	1.06	1.06	1.06	1.06	1.06	1.06	1.06									
Lanes:	1.00	0.59	0.41	1.54	0.46	1.00	1.00	3.00	1.00	1.00	3.00	1.00									
Final Sat.:	1700	1011	689	2621	779	1700	1700	5100	1700	1700	5100	1700									
Capacity Analysis Module:																					
Vol/Sat:	0.01	0.02	0.02	0.04	0.04	0.09	0.08	0.17	0.01	0.02	0.33	0.17									
Crit Moves:	****					****	****				****										

Newport Banning Ranch
Existing Conditions - ICU
PM Peak Hour

Level Of Service Computation Report
ICU 1(Loss as Cycle Length %) Method (Future Volume Alternative)

Intersection #20 Brookhurst St/Bushard St

Cycle (sec):	100	Critical Vol./Cap.(X):	0.319
Loss Time (sec):	5 (Y+R=4.0 sec)	Average Delay (sec/veh):	xxxxxx
Optimal Cycle:	18	Level Of Service:	A

Street Name:	Brookhurst Street									Bushard Street											
Approach:	North Bound				South Bound					East Bound					West Bound						
Movement:	L	-	T	-	R	L	-	T	-	R	L	-	T	-	R	L	-	T	-	R	
Control:	Protected					Protected					Permitted					Permitted					
Rights:	Include					Include					Include					Include					
Min. Green:	0	0	0			0	0	0			0	0	0			0	0	0			
Lanes:	1	0	2	1	0	1	0	3	0	1	1	0	0	0	1	0	0	1!	0	0	
Volume Module:																					
Base Vol:	222	662	0			0	430	22			13	0	92			0	0	0			
Growth Adj:	1.00	1.00	1.00			1.00	1.00	1.00			1.00	1.00	1.00			1.00	1.00	1.00			
Initial Bse:	222	662	0			0	430	22			13	0	92			0	0	0			
Added Vol:	0	0	0			0	0	0			0	0	0			0	0	0			
PasserByVol:	0	0	0			0	0	0			0	0	0			0	0	0			
Initial Fut:	222	662	0			0	430	22			13	0	92			0	0	0			
User Adj:	1.00	1.00	1.00			1.00	1.00	1.00			1.00	1.00	1.00			1.00	1.00	1.00			
PHF Adj:	1.00	1.00	1.00			1.00	1.00	1.00			1.00	1.00	1.00			1.00	1.00	1.00			
PHF Volume:	222	662	0			0	430	22			13	0	92			0	0	0			
Reduct Vol:	0	0	0			0	0	0			0	0	0			0	0	0			
Reduced Vol:	222	662	0			0	430	22			13	0	92			0	0	0			
PCE Adj:	1.00	1.00	1.00			1.00	1.00	1.00			1.00	1.00	1.00			1.00	1.00	1.00			
MLF Adj:	1.00	1.00	1.00			1.00	1.00	1.00			1.00	1.00	1.00			1.00	1.00	1.00			
FinalVolume:	222	662	0			0	430	22			13	0	92			0	0	0			
Saturation Flow Module:																					
Sat/Lane:	1600	1600	1600			1600	1600	1600			1600	1600	1600			1600	1600	1600			
Adjustment:	1.06	1.06	1.06			1.06	1.06	1.06			1.06	1.06	1.06			1.06	1.06	1.06			
Lanes:	1.00	3.00	0.00			1.00	3.00	1.00			1.00	0.00	1.00			0.00	1.00	0.00			
Final Sat.:	1700	5100	0			1700	5100	1700			1700	0	1700			0	1700	0			
Capacity Analysis Module:																					
Vol/Sat:	0.13	0.13	0.00			0.00	0.08	0.01			0.01	0.00	0.05			0.00	0.00	0.00			
Crit Moves:	****						****						****								

Newport Banning Ranch
Existing Conditions - ICU
PM Peak Hour

Level Of Service Computation Report
ICU 1(Loss as Cycle Length %) Method (Future Volume Alternative)

Intersection #21 Brookhurst St/PCH

Cycle (sec):	120	Critical Vol./Cap.(X):	0.653
Loss Time (sec):	6 (Y+R=4.0 sec)	Average Delay (sec/veh):	xxxxxx
Optimal Cycle:	36	Level Of Service:	B

Street Name:	Brookhurst Street									Pacific Coast HIghway								
Approach:	North Bound			South Bound			East Bound			West Bound								
Movement:	L	- T	- R	L	- T	- R	L	- T	- R	L	- T	- R	L	- T	- R	L	- T	- R
Control:	Split Phase			Split Phase			Protected			Protected								
Rights:	Include			Include			Include			Ovl								
Min. Green:	0	0	0	0	0	0	0	0	0	0	0	0						
Lanes:	1 0	0 1	0	2 0	1 0	1	1 0	3 0	1	1 0	3 0	1						
Volume Module:																		
Base Vol:	8	23	17	324	6	179	182	797	2	13	1871	757						
Growth Adj:	1.00	1.00	1.00	1.00	1.00	1.00	1.00	1.00	1.00	1.00	1.00	1.00						
Initial Bse:	8	23	17	324	6	179	182	797	2	13	1871	757						
Added Vol:	0	0	0	0	0	0	0	0	0	0	0	0						
PasserByVol:	0	0	0	0	0	0	0	0	0	0	0	0						
Initial Fut:	8	23	17	324	6	179	182	797	2	13	1871	757						
User Adj:	1.00	1.00	1.00	1.00	1.00	1.00	1.00	1.00	1.00	1.00	1.00	1.00						
PHF Adj:	1.00	1.00	1.00	1.00	1.00	1.00	1.00	1.00	1.00	1.00	1.00	1.00						
PHF Volume:	8	23	17	324	6	179	182	797	2	13	1871	757						
Reduct Vol:	0	0	0	0	0	0	0	0	0	0	0	0						
Reduced Vol:	8	23	17	324	6	179	182	797	2	13	1871	757						
PCE Adj:	1.00	1.00	1.00	1.00	1.00	1.00	1.00	1.00	1.00	1.00	1.00	1.00						
MLF Adj:	1.00	1.00	1.00	1.00	1.00	1.00	1.00	1.00	1.00	1.00	1.00	1.00						
FinalVolume:	8	23	17	324	6	179	182	797	2	13	1871	757						
OvlAdjVol:												578						
Saturation Flow Module:																		
Sat/Lane:	1600	1600	1600	1600	1600	1600	1600	1600	1600	1600	1600	1600						
Adjustment:	1.06	1.06	1.06	1.06	1.06	1.06	1.06	1.06	1.06	1.06	1.06	1.06						
Lanes:	1.01	0.57	0.42	2.00	1.00	1.00	1.00	3.00	1.00	1.00	3.00	1.00						
Final Sat.:	1700	978	723	3400	1700	1700	1700	5100	1700	1700	5100	1700						
Capacity Analysis Module:																		
Vol/Sat:	0.00	0.02	0.02	0.10	0.00	0.11	0.11	0.16	0.00	0.01	0.37	0.45						
OvlAdjV/S:												0.34						
Crit Moves:	****					****	****				****							

Newport Banning Ranch
Existing Conditions - ICU
PM Peak Hour

Level Of Service Computation Report
ICU 1(Loss as Cycle Length %) Method (Future Volume Alternative)

Intersection #22 Placentia Ave/Victoria St

Cycle (sec):	100	Critical Vol./Cap.(X):	0.790
Loss Time (sec):	0 (Y+R=4.0 sec)	Average Delay (sec/veh):	xxxxxx
Optimal Cycle:	109	Level Of Service:	C

Street Name:	Placentia Avenue						Victoria Street					
Approach:	North Bound			South Bound			East Bound			West Bound		
Movement:	L -	T -	R	L -	T -	R	L -	T -	R	L -	T -	R
Control:	Protected			Protected			Protected			Protected		
Rights:	Include			Include			Ovl			Include		
Min. Green:	0	0	0	0	0	0	0	0	0	0	0	0
Lanes:	2 0	2 0	1	1 0	2 0	1	1 0	2 0	1	1 0	2 0	1
Volume Module:												
Base Vol:	520	674	157	103	490	152	71	587	306	166	1376	87
Growth Adj:	1.00	1.00	1.00	1.00	1.00	1.00	1.00	1.00	1.00	1.00	1.00	1.00
Initial Bse:	520	674	157	103	490	152	71	587	306	166	1376	87
Added Vol:	0	0	0	0	0	0	0	0	0	0	0	0
PasserByVol:	0	0	0	0	0	0	0	0	0	0	0	0
Initial Fut:	520	674	157	103	490	152	71	587	306	166	1376	87
User Adj:	1.00	1.00	1.00	1.00	1.00	1.00	1.00	1.00	1.00	1.00	1.00	1.00
PHF Adj:	1.00	1.00	1.00	1.00	1.00	1.00	1.00	1.00	1.00	1.00	1.00	1.00
PHF Volume:	520	674	157	103	490	152	71	587	306	166	1376	87
Reduct Vol:	0	0	0	0	0	0	0	0	0	0	0	0
Reduced Vol:	520	674	157	103	490	152	71	587	306	166	1376	87
PCE Adj:	1.00	1.00	1.00	1.00	1.00	1.00	1.00	1.00	1.00	1.00	1.00	1.00
MLF Adj:	1.00	1.00	1.00	1.00	1.00	1.00	1.00	1.00	1.00	1.00	1.00	1.00
FinalVolume:	520	674	157	103	490	152	71	587	306	166	1376	87
OvlAdjVol:									46			
Saturation Flow Module:												
Sat/Lane:	1600	1600	1600	1600	1600	1600	1600	1600	1600	1600	1600	1600
Adjustment:	1.00	1.00	1.00	1.00	1.00	1.00	1.00	1.00	1.00	1.00	1.00	1.00
Lanes:	2.00	2.00	1.00	1.00	2.00	1.00	1.00	2.00	1.00	1.00	2.00	1.00
Final Sat.:	3200	3200	1600	1600	3200	1600	1600	3200	1600	1600	3200	1600
Capacity Analysis Module:												
Vol/Sat:	0.16	0.21	0.10	0.06	0.15	0.10	0.04	0.18	0.19	0.10	0.43	0.05
OvlAdjV/S:									0.03			
Crit Moves:	****				****		****				****	

Newport Banning Ranch
Existing Conditions - ICU
PM Peak Hour

Level Of Service Computation Report
ICU 1(Loss as Cycle Length %) Method (Future Volume Alternative)

Intersection #23 Pomona Ave/Victoria St

Cycle (sec):	100	Critical Vol./Cap.(X):	0.663
Loss Time (sec):	0 (Y+R=4.0 sec)	Average Delay (sec/veh):	xxxxxx
Optimal Cycle:	43	Level Of Service:	B

Street Name:	Pomona Avenue						Victoria Street					
Approach:	North Bound			South Bound			East Bound			West Bound		
Movement:	L - T - R			L - T - R			L - T - R			L - T - R		
Control:	Permitted			Permitted			Permitted			Permitted		
Rights:	Include			Include			Include			Include		
Min. Green:	0	0	0	0	0	0	0	0	0	0	0	0
Lanes:	1 0	0 1	0	1 0	0 1	0	1 0	2 0	1	1 0	2 0	1
Volume Module:												
Base Vol:	50	138	119	20	145	28	21	806	79	118	1526	29
Growth Adj:	1.00	1.00	1.00	1.00	1.00	1.00	1.00	1.00	1.00	1.00	1.00	1.00
Initial Bse:	50	138	119	20	145	28	21	806	79	118	1526	29
Added Vol:	0	0	0	0	0	0	0	0	0	0	0	0
PasserByVol:	0	0	0	0	0	0	0	0	0	0	0	0
Initial Fut:	50	138	119	20	145	28	21	806	79	118	1526	29
User Adj:	1.00	1.00	1.00	1.00	1.00	1.00	1.00	1.00	1.00	1.00	1.00	1.00
PHF Adj:	1.00	1.00	1.00	1.00	1.00	1.00	1.00	1.00	1.00	1.00	1.00	1.00
PHF Volume:	50	138	119	20	145	28	21	806	79	118	1526	29
Reduct Vol:	0	0	0	0	0	0	0	0	0	0	0	0
Reduced Vol:	50	138	119	20	145	28	21	806	79	118	1526	29
PCE Adj:	1.00	1.00	1.00	1.00	1.00	1.00	1.00	1.00	1.00	1.00	1.00	1.00
MLF Adj:	1.00	1.00	1.00	1.00	1.00	1.00	1.00	1.00	1.00	1.00	1.00	1.00
FinalVolume:	50	138	119	20	145	28	21	806	79	118	1526	29
Saturation Flow Module:												
Sat/Lane:	1600	1600	1600	1600	1600	1600	1600	1600	1600	1600	1600	1600
Adjustment:	1.00	1.00	1.00	1.00	1.00	1.00	1.00	1.00	1.00	1.00	1.00	1.00
Lanes:	1.00	0.54	0.46	1.00	0.84	0.16	1.00	2.00	1.00	1.00	2.00	1.00
Final Sat.:	1600	859	741	1600	1341	259	1600	3200	1600	1600	3200	1600
Capacity Analysis Module:												
Vol/Sat:	0.03	0.16	0.16	0.01	0.11	0.11	0.01	0.25	0.05	0.07	0.48	0.02
Crit Moves:		****			****			****			****	

Newport Banning Ranch
Existing Conditions - ICU
PM Peak Hour

Level Of Service Computation Report
ICU 1(Loss as Cycle Length %) Method (Future Volume Alternative)

Intersection #24 Harbor Blvd/Victoria St

Cycle (sec):	100	Critical Vol./Cap.(X):	0.777
Loss Time (sec):	0 (Y+R=4.0 sec)	Average Delay (sec/veh):	xxxxxx
Optimal Cycle:	102	Level Of Service:	C

Street Name:	Harbor Boulevard						Victoria Street					
Approach:	North Bound			South Bound			East Bound			West Bound		
Movement:	L - T - R			L - T - R			L - T - R			L - T - R		
Control:	Protected			Protected			Protected			Protected		
Rights:	Include			Ovl			Include			Include		
Min. Green:	0	0	0	0	0	0	0	0	0	0	0	0
Lanes:	1 0	3 0	1	1 0	3 0	1	2 0	1 1	0	2 0	2 0	1
Volume Module:												
Base Vol:	118	1081	124	142	1116	294	269	639	80	121	1212	159
Growth Adj:	1.00	1.00	1.00	1.00	1.00	1.00	1.00	1.00	1.00	1.00	1.00	1.00
Initial Bse:	118	1081	124	142	1116	294	269	639	80	121	1212	159
Added Vol:	0	0	0	0	0	0	0	0	0	0	0	0
PasserByVol:	0	0	0	0	0	0	0	0	0	0	0	0
Initial Fut:	118	1081	124	142	1116	294	269	639	80	121	1212	159
User Adj:	1.00	1.00	1.00	1.00	1.00	1.00	1.00	1.00	1.00	1.00	1.00	1.00
PHF Adj:	1.00	1.00	1.00	1.00	1.00	1.00	1.00	1.00	1.00	1.00	1.00	1.00
PHF Volume:	118	1081	124	142	1116	294	269	639	80	121	1212	159
Reduct Vol:	0	0	0	0	0	0	0	0	0	0	0	0
Reduced Vol:	118	1081	124	142	1116	294	269	639	80	121	1212	159
PCE Adj:	1.00	1.00	1.00	1.00	1.00	1.00	1.00	1.00	1.00	1.00	1.00	1.00
MLF Adj:	1.00	1.00	1.00	1.00	1.00	1.00	1.00	1.00	1.00	1.00	1.00	1.00
FinalVolume:	118	1081	124	142	1116	294	269	639	80	121	1212	159
OvlAdjVol:						160						
Saturation Flow Module:												
Sat/Lane:	1600	1600	1600	1600	1600	1600	1600	1600	1600	1600	1600	1600
Adjustment:	1.00	1.00	1.00	1.00	1.00	1.00	1.00	1.00	1.00	1.00	1.00	1.00
Lanes:	1.00	3.00	1.00	1.00	3.00	1.00	2.00	1.78	0.22	2.00	2.00	1.00
Final Sat.:	1600	4800	1600	1600	4800	1600	3200	2844	356	3200	3200	1600
Capacity Analysis Module:												
Vol/Sat:	0.07	0.23	0.08	0.09	0.23	0.18	0.08	0.22	0.22	0.04	0.38	0.10
OvlAdjV/S:						0.10						
Crit Moves:		****		****			****				****	

Newport Banning Ranch
Existing Conditions - ICU
PM Peak Hour

Level Of Service Computation Report
ICU 1(Loss as Cycle Length %) Method (Future Volume Alternative)

Intersection #25 Newport Blvd/Victoria St [Ramp]

Cycle (sec):	120	Critical Vol./Cap.(X):	0.450
Loss Time (sec):	0 (Y+R=4.0 sec)	Average Delay (sec/veh):	xxxxxx
Optimal Cycle:	34	Level Of Service:	A

Street Name:	Newport Boulevard						Victoria Street					
Approach:	North Bound			South Bound			East Bound			West Bound		
Movement:	L -	T -	R	L -	T -	R	L -	T -	R	L -	T -	R
Control:	Permitted			Permitted			Protected			Protected		
Rights:	Include			Ignore			Include			Include		
Min. Green:	0	0	0	0	0	0	0	0	0	0	0	0
Lanes:	0 0	0 0	0	1 1	2 0	1	0 0	2 1	0	1 0	1 0	0
Volume Module:												
Base Vol:	0	0	0	590	911	1230	0	765	36	77	233	0
Growth Adj:	1.00	1.00	1.00	1.00	1.00	1.00	1.00	1.00	1.00	1.00	1.00	1.00
Initial Bse:	0	0	0	590	911	1230	0	765	36	77	233	0
Added Vol:	0	0	0	0	0	0	0	0	0	0	0	0
PasserByVol:	0	0	0	0	0	0	0	0	0	0	0	0
Initial Fut:	0	0	0	590	911	1230	0	765	36	77	233	0
User Adj:	1.00	1.00	1.00	1.00	1.00	0.00	1.00	1.00	1.00	1.00	1.00	1.00
PHF Adj:	1.00	1.00	1.00	1.00	1.00	0.00	1.00	1.00	1.00	1.00	1.00	1.00
PHF Volume:	0	0	0	590	911	0	0	765	36	77	233	0
Reduct Vol:	0	0	0	0	0	0	0	0	0	0	0	0
Reduced Vol:	0	0	0	590	911	0	0	765	36	77	233	0
PCE Adj:	1.00	1.00	1.00	1.00	1.00	0.00	1.00	1.00	1.00	1.00	1.00	1.00
MLF Adj:	1.00	1.00	1.00	1.00	1.00	0.00	1.00	1.00	1.00	1.00	1.00	1.00
FinalVolume:	0	0	0	590	911	0	0	765	36	77	233	0
Saturation Flow Module:												
Sat/Lane:	1600	1600	1600	1600	1600	1600	1600	1600	1600	1600	1600	1600
Adjustment:	1.00	1.00	1.00	1.00	1.00	1.00	1.00	1.00	1.00	1.00	1.00	1.00
Lanes:	0.00	0.00	0.00	1.57	2.43	1.00	0.00	2.87	0.13	1.00	1.00	0.00
Final Sat.:	0	0	0	2516	3884	1600	0	4584	216	1600	1600	0
Capacity Analysis Module:												
Vol/Sat:	0.00	0.00	0.00	0.23	0.23	0.00	0.00	0.17	0.17	0.05	0.15	0.00
Crit Moves:				****				****		****		

Newport Banning Ranch
Existing Conditions - ICU
PM Peak Hour

Level Of Service Computation Report
ICU 1(Loss as Cycle Length %) Method (Future Volume Alternative)

Intersection #26 Newport Blvd /Victoria St (22nd St) [Ramp]

Cycle (sec):	120	Critical Vol./Cap.(X):	0.567
Loss Time (sec):	0 (Y+R=4.0 sec)	Average Delay (sec/veh):	xxxxxx
Optimal Cycle:	43	Level Of Service:	A

Street Name:	Newport Boulevard						Victoria Street (22nd Street)					
Approach:	North Bound			South Bound			East Bound			West Bound		
Movement:	L -	T -	R	L -	T -	R	L -	T -	R	L -	T -	R
Control:	Permitted			Permitted			Protected			Protected		
Rights:	Include			Include			Include			Include		
Min. Green:	0	0	0	0	0	0	0	0	0	0	0	0
Lanes:	0 1	2 0	1	0 0	0 0	0	2 0	2 0	0	0 0	1 0	1
Volume Module:												
Base Vol:	109	907	92	0	0	0	734	601	0	0	202	203
Growth Adj:	1.00	1.00	1.00	1.00	1.00	1.00	1.00	1.00	1.00	1.00	1.00	1.00
Initial Bse:	109	907	92	0	0	0	734	601	0	0	202	203
Added Vol:	0	0	0	0	0	0	0	0	0	0	0	0
PasserByVol:	0	0	0	0	0	0	0	0	0	0	0	0
Initial Fut:	109	907	92	0	0	0	734	601	0	0	202	203
User Adj:	1.00	1.00	1.00	1.00	1.00	1.00	1.00	1.00	1.00	1.00	1.00	1.00
PHF Adj:	1.00	1.00	1.00	1.00	1.00	1.00	1.00	1.00	1.00	1.00	1.00	1.00
PHF Volume:	109	907	92	0	0	0	734	601	0	0	202	203
Reduct Vol:	0	0	0	0	0	0	0	0	0	0	0	0
Reduced Vol:	109	907	92	0	0	0	734	601	0	0	202	203
PCE Adj:	1.00	1.00	1.00	1.00	1.00	1.00	1.00	1.00	1.00	1.00	1.00	1.00
MLF Adj:	1.00	1.00	1.00	1.00	1.00	1.00	1.00	1.00	1.00	1.00	1.00	1.00
FinalVolume:	109	907	92	0	0	0	734	601	0	0	202	203
Saturation Flow Module:												
Sat/Lane:	1600	1600	1600	1600	1600	1600	1600	1600	1600	1600	1600	1600
Adjustment:	1.00	1.00	1.00	1.00	1.00	1.00	1.00	1.00	1.00	1.00	1.00	1.00
Lanes:	0.32	2.68	1.00	0.00	0.00	0.00	2.00	2.00	0.00	0.00	1.00	1.00
Final Sat.:	515	4285	1600	0	0	0	3200	3200	0	0	1600	1600
Capacity Analysis Module:												
Vol/Sat:	0.07	0.21	0.06	0.00	0.00	0.00	0.23	0.19	0.00	0.00	0.13	0.13
Crit Moves:		****					****				****	

Newport Banning Ranch
Existing Conditions - ICU
PM Peak Hour

Level Of Service Computation Report
2000 HCM 4-Way Stop Method (Future Volume Alternative)

Intersection #27 Whittier Ave/19th St

Cycle (sec):	100	Critical Vol./Cap.(X):	0.266
Loss Time (sec):	0 (Y+R=4.0 sec)	Average Delay (sec/veh):	9.0
Optimal Cycle:	0	Level Of Service:	A

Street Name:	Whittier Avenue						19th St					
Approach:	North Bound			South Bound			East Bound			West Bound		
Movement:	L -	T -	R	L -	T -	R	L -	T -	R	L -	T -	R
Control:	Stop Sign			Stop Sign			Stop Sign			Stop Sign		
Rights:	Include			Include			Include			Include		
Min. Green:	0	0	0	0	0	0	0	0	0	0	0	0
Lanes:	0 0	1! 0	0	0 1	0 0	0	1 0	0 1	0	1 0	0 1	0
Volume Module:												
Base Vol:	32	6	175	17	4	0	1	66	11	146	97	18
Growth Adj:	1.00	1.00	1.00	1.00	1.00	1.00	1.00	1.00	1.00	1.00	1.00	1.00
Initial Bse:	32	6	175	17	4	0	1	66	11	146	97	18
Added Vol:	0	0	0	0	0	0	0	0	0	0	0	0
PasserByVol:	0	0	0	0	0	0	0	0	0	0	0	0
Initial Fut:	32	6	175	17	4	0	1	66	11	146	97	18
User Adj:	1.00	1.00	1.00	1.00	1.00	1.00	1.00	1.00	1.00	1.00	1.00	1.00
PHF Adj:	1.00	1.00	1.00	1.00	1.00	1.00	1.00	1.00	1.00	1.00	1.00	1.00
PHF Volume:	32	6	175	17	4	0	1	66	11	146	97	18
Reduct Vol:	0	0	0	0	0	0	0	0	0	0	0	0
Reduced Vol:	32	6	175	17	4	0	1	66	11	146	97	18
PCE Adj:	1.00	1.00	1.00	1.00	1.00	1.00	1.00	1.00	1.00	1.00	1.00	1.00
MLF Adj:	1.00	1.00	1.00	1.00	1.00	1.00	1.00	1.00	1.00	1.00	1.00	1.00
FinalVolume:	32	6	175	17	4	0	1	66	11	146	97	18
Saturation Flow Module:												
Adjustment:	1.00	1.00	1.00	1.00	1.00	1.00	1.00	1.00	1.00	1.00	1.00	1.00
Lanes:	0.15	0.03	0.82	0.81	0.19	0.00	1.00	0.86	0.14	1.00	0.84	0.16
Final Sat.:	120	23	657	532	125	0	597	568	95	626	590	110
Capacity Analysis Module:												
Vol/Sat:	0.27	0.27	0.27	0.03	0.03	xxxx	0.00	0.12	0.12	0.23	0.16	0.16
Crit Moves:		****			****				****	****		
Delay/Veh:	8.7	8.7	8.7	8.3	8.3	0.0	8.5	8.5	8.5	9.9	8.6	8.6
Delay Adj:	1.00	1.00	1.00	1.00	1.00	1.00	1.00	1.00	1.00	1.00	1.00	1.00
AdjDel/Veh:	8.7	8.7	8.7	8.3	8.3	0.0	8.5	8.5	8.5	9.9	8.6	8.6
LOS by Move:	A	A	A	A	A	*	A	A	A	A	A	A
ApproachDel:	8.7			8.3			8.5			9.4		
Delay Adj:	1.00			1.00			1.00			1.00		
ApprAdjDel:	8.7			8.3			8.5			9.4		
LOS by Appr:	A			A			A			A		
AllWayAvgQ:	0.3	0.3	0.3	0.0	0.0	0.0	0.0	0.1	0.1	0.3	0.2	0.2

Newport Banning Ranch
Existing Conditions - ICU
PM Peak Hour

Note: Queue reported is the number of cars per lane.

Newport Banning Ranch
Existing Conditions - ICU
PM Peak Hour

Level Of Service Computation Report
2000 HCM 4-Way Stop Method (Future Volume Alternative)

****

Intersection #28 Monrovia Ave/19th St

****

Cycle (sec): 100 Critical Vol./Cap.(X): 0.495
Loss Time (sec): 0 (Y+R=4.0 sec) Average Delay (sec/veh): 13.0
Optimal Cycle: 0 Level Of Service: B

****

Street Name:	Monrovia Avenue						19th Street					
Approach:	North Bound			South Bound			East Bound			West Bound		
Movement:	L -	T -	R	L -	T -	R	L -	T -	R	L -	T -	R
Control:	Stop Sign			Stop Sign			Stop Sign			Stop Sign		
Rights:	Include			Include			Include			Include		
Min. Green:	0	0	0	0	0	0	0	0	0	0	0	0
Lanes:	0 1	0 0	1	0 0	1! 0	0	1 0	1 0	1	1 0	1 0	1
Volume Module:												
Base Vol:	14	25	243	50	9	3	6	259	9	124	255	50
Growth Adj:	1.00	1.00	1.00	1.00	1.00	1.00	1.00	1.00	1.00	1.00	1.00	1.00
Initial Bse:	14	25	243	50	9	3	6	259	9	124	255	50
Added Vol:	0	0	0	0	0	0	0	0	0	0	0	0
PasserByVol:	0	0	0	0	0	0	0	0	0	0	0	0
Initial Fut:	14	25	243	50	9	3	6	259	9	124	255	50
User Adj:	1.00	1.00	1.00	1.00	1.00	1.00	1.00	1.00	1.00	1.00	1.00	1.00
PHF Adj:	1.00	1.00	1.00	1.00	1.00	1.00	1.00	1.00	1.00	1.00	1.00	1.00
PHF Volume:	14	25	243	50	9	3	6	259	9	124	255	50
Reduct Vol:	0	0	0	0	0	0	0	0	0	0	0	0
Reduced Vol:	14	25	243	50	9	3	6	259	9	124	255	50
PCE Adj:	1.00	1.00	1.00	1.00	1.00	1.00	1.00	1.00	1.00	1.00	1.00	1.00
MLF Adj:	1.00	1.00	1.00	1.00	1.00	1.00	1.00	1.00	1.00	1.00	1.00	1.00
FinalVolume:	14	25	243	50	9	3	6	259	9	124	255	50
Saturation Flow Module:												
Adjustment:	1.00	1.00	1.00	1.00	1.00	1.00	1.00	1.00	1.00	1.00	1.00	1.00
Lanes:	0.36	0.64	1.00	0.81	0.14	0.05	1.00	1.00	1.00	1.00	1.00	1.00
Final Sat.:	183	327	587	377	68	23	482	523	574	508	549	608
Capacity Analysis Module:												
Vol/Sat:	0.08	0.08	0.41	0.13	0.13	0.13	0.01	0.49	0.02	0.24	0.46	0.08
Crit Moves:			****	****				****			****	
Delay/Veh:	9.9	9.9	12.2	11.0	11.0	11.0	9.9	15.2	8.7	11.6	14.1	8.8
Delay Adj:	1.00	1.00	1.00	1.00	1.00	1.00	1.00	1.00	1.00	1.00	1.00	1.00
AdjDel/Veh:	9.9	9.9	12.2	11.0	11.0	11.0	9.9	15.2	8.7	11.6	14.1	8.8
LOS by Move:	A	A	B	B	B	B	A	C	A	B	B	A
ApproachDel:	11.9			11.0			14.8			12.8		
Delay Adj:	1.00			1.00			1.00			1.00		
ApprAdjDel:	11.9			11.0			14.8			12.8		
LOS by Appr:	B			B			B			B		
AllWayAvgQ:	0.1	0.1	0.6	0.1	0.1	0.1	0.0	0.9	0.0	0.3	0.8	0.1

****

Newport Banning Ranch
Existing Conditions - ICU
PM Peak Hour

Note: Queue reported is the number of cars per lane.

Newport Banning Ranch
Existing Conditions - ICU
PM Peak Hour

Level Of Service Computation Report
ICU 1(Loss as Cycle Length %) Method (Future Volume Alternative)

Intersection #29 Placentia Ave/19th St

Cycle (sec):	100	Critical Vol./Cap.(X):	0.681
Loss Time (sec):	0 (Y+R=4.0 sec)	Average Delay (sec/veh):	xxxxxx
Optimal Cycle:	71	Level Of Service:	B

Street Name:	Placentia Avenue						19th Street					
Approach:	North Bound			South Bound			East Bound			West Bound		
Movement:	L - T - R			L - T - R			L - T - R			L - T - R		
Control:	Protected			Protected			Protected			Protected		
Rights:	Include			Include			Include			Include		
Min. Green:	0	0	0	0	0	0	0	0	0	0	0	0
Lanes:	1 0	2 0	1	1 0	1 1	0	2 0	1 1	0	2 0	2 0	1
Volume Module:												
Base Vol:	49	863	246	206	565	221	306	600	56	248	405	281
Growth Adj:	1.00	1.00	1.00	1.00	1.00	1.00	1.00	1.00	1.00	1.00	1.00	1.00
Initial Bse:	49	863	246	206	565	221	306	600	56	248	405	281
Added Vol:	0	0	0	0	0	0	0	0	0	0	0	0
PasserByVol:	0	0	0	0	0	0	0	0	0	0	0	0
Initial Fut:	49	863	246	206	565	221	306	600	56	248	405	281
User Adj:	1.00	1.00	1.00	1.00	1.00	1.00	1.00	1.00	1.00	1.00	1.00	1.00
PHF Adj:	1.00	1.00	1.00	1.00	1.00	1.00	1.00	1.00	1.00	1.00	1.00	1.00
PHF Volume:	49	863	246	206	565	221	306	600	56	248	405	281
Reduct Vol:	0	0	0	0	0	0	0	0	0	0	0	0
Reduced Vol:	49	863	246	206	565	221	306	600	56	248	405	281
PCE Adj:	1.00	1.00	1.00	1.00	1.00	1.00	1.00	1.00	1.00	1.00	1.00	1.00
MLF Adj:	1.00	1.00	1.00	1.00	1.00	1.00	1.00	1.00	1.00	1.00	1.00	1.00
FinalVolume:	49	863	246	206	565	221	306	600	56	248	405	281
Saturation Flow Module:												
Sat/Lane:	1600	1600	1600	1600	1600	1600	1600	1600	1600	1600	1600	1600
Adjustment:	1.00	1.00	1.00	1.00	1.00	1.00	1.00	1.00	1.00	1.00	1.00	1.00
Lanes:	1.00	2.00	1.00	1.00	1.44	0.56	2.00	1.83	0.17	2.00	2.00	1.00
Final Sat.:	1600	3200	1600	1600	2300	900	3200	2927	273	3200	3200	1600
Capacity Analysis Module:												
Vol/Sat:	0.03	0.27	0.15	0.13	0.25	0.25	0.10	0.20	0.21	0.08	0.13	0.18
Crit Moves:		****		****					****	****		

Newport Banning Ranch
Existing Conditions - ICU
PM Peak Hour

Level Of Service Computation Report
ICU 1(Loss as Cycle Length %) Method (Future Volume Alternative)

Intersection #30 Pomona Ave/19th St

Cycle (sec):	100	Critical Vol./Cap.(X):	0.568
Loss Time (sec):	0 (Y+R=4.0 sec)	Average Delay (sec/veh):	xxxxxx
Optimal Cycle:	53	Level Of Service:	A

Street Name:	Pomona Avenue						19th Street					
Approach:	North Bound			South Bound			East Bound			West Bound		
Movement:	L - T - R			L - T - R			L - T - R			L - T - R		
Control:	Protected			Protected			Prot+Permit			Prot+Permit		
Rights:	Include			Include			Include			Include		
Min. Green:	0	0	0	0	0	0	0	0	0	0	0	0
Lanes:	1 0	0 1	0	1 0	0 1	0	1 0	1 1	0	1 0	1 1	0
Volume Module:												
Base Vol:	50	125	110	63	98	55	40	922	47	127	809	59
Growth Adj:	1.00	1.00	1.00	1.00	1.00	1.00	1.00	1.00	1.00	1.00	1.00	1.00
Initial Bse:	50	125	110	63	98	55	40	922	47	127	809	59
Added Vol:	0	0	0	0	0	0	0	0	0	0	0	0
PasserByVol:	0	0	0	0	0	0	0	0	0	0	0	0
Initial Fut:	50	125	110	63	98	55	40	922	47	127	809	59
User Adj:	1.00	1.00	1.00	1.00	1.00	1.00	1.00	1.00	1.00	1.00	1.00	1.00
PHF Adj:	1.00	1.00	1.00	1.00	1.00	1.00	1.00	1.00	1.00	1.00	1.00	1.00
PHF Volume:	50	125	110	63	98	55	40	922	47	127	809	59
Reduct Vol:	0	0	0	0	0	0	0	0	0	0	0	0
Reduced Vol:	50	125	110	63	98	55	40	922	47	127	809	59
PCE Adj:	1.00	1.00	1.00	1.00	1.00	1.00	1.00	1.00	1.00	1.00	1.00	1.00
MLF Adj:	1.00	1.00	1.00	1.00	1.00	1.00	1.00	1.00	1.00	1.00	1.00	1.00
FinalVolume:	50	125	110	63	98	55	40	922	47	127	809	59
Saturation Flow Module:												
Sat/Lane:	1600	1600	1600	1600	1600	1600	1600	1600	1600	1600	1600	1600
Adjustment:	1.00	1.00	1.00	1.00	1.00	1.00	1.00	1.00	1.00	1.00	1.00	1.00
Lanes:	1.00	0.53	0.47	1.00	0.64	0.36	1.00	1.90	0.10	1.00	1.86	0.14
Final Sat.:	1600	851	749	1600	1025	575	1600	3045	155	1600	2982	218
Capacity Analysis Module:												
Vol/Sat:	0.03	0.15	0.15	0.04	0.10	0.10	0.03	0.30	0.30	0.08	0.27	0.27
Crit Moves:		****		****				****		****		

Newport Banning Ranch
Existing Conditions - ICU
PM Peak Hour

Level Of Service Computation Report
ICU 1(Loss as Cycle Length %) Method (Future Volume Alternative)

Intersection #31 Anaheim Ave/19th St

Cycle (sec):	100	Critical Vol./Cap.(X):	0.545
Loss Time (sec):	0 (Y+R=4.0 sec)	Average Delay (sec/veh):	xxxxxx
Optimal Cycle:	41	Level Of Service:	A

Street Name:	Anaheim Avenue						19th Street					
Approach:	North Bound			South Bound			East Bound			West Bound		
Movement:	L - T - R			L - T - R			L - T - R			L - T - R		
Control:	Permitted			Permitted			Prot+Permit			Prot+Permit		
Rights:	Include			Include			Include			Include		
Min. Green:	0	0	0	0	0	0	0	0	0	0	0	0
Lanes:	1 0	0 1	0	1 0	0 1	0	1 0	1 1	0	1 0	2 0	1
Volume Module:												
Base Vol:	61	60	97	59	48	26	45	1023	53	118	947	109
Growth Adj:	1.00	1.00	1.00	1.00	1.00	1.00	1.00	1.00	1.00	1.00	1.00	1.00
Initial Bse:	61	60	97	59	48	26	45	1023	53	118	947	109
Added Vol:	0	0	0	0	0	0	0	0	0	0	0	0
PasserByVol:	0	0	0	0	0	0	0	0	0	0	0	0
Initial Fut:	61	60	97	59	48	26	45	1023	53	118	947	109
User Adj:	1.00	1.00	1.00	1.00	1.00	1.00	1.00	1.00	1.00	1.00	1.00	1.00
PHF Adj:	1.00	1.00	1.00	1.00	1.00	1.00	1.00	1.00	1.00	1.00	1.00	1.00
PHF Volume:	61	60	97	59	48	26	45	1023	53	118	947	109
Reduct Vol:	0	0	0	0	0	0	0	0	0	0	0	0
Reduced Vol:	61	60	97	59	48	26	45	1023	53	118	947	109
PCE Adj:	1.00	1.00	1.00	1.00	1.00	1.00	1.00	1.00	1.00	1.00	1.00	1.00
MLF Adj:	1.00	1.00	1.00	1.00	1.00	1.00	1.00	1.00	1.00	1.00	1.00	1.00
FinalVolume:	61	60	97	59	48	26	45	1023	53	118	947	109
Saturation Flow Module:												
Sat/Lane:	1600	1600	1600	1600	1600	1600	1600	1600	1600	1600	1600	1600
Adjustment:	1.00	1.00	1.00	1.00	1.00	1.00	1.00	1.00	1.00	1.00	1.00	1.00
Lanes:	1.00	0.38	0.62	1.00	0.65	0.35	1.00	1.90	0.10	1.00	2.00	1.00
Final Sat.:	1600	611	989	1600	1038	562	1600	3042	158	1600	3200	1600
Capacity Analysis Module:												
Vol/Sat:	0.04	0.10	0.10	0.04	0.05	0.05	0.03	0.34	0.34	0.07	0.30	0.07
Crit Moves:		****		****				****		****		

Newport Banning Ranch
Existing Conditions - ICU
PM Peak Hour

Level Of Service Computation Report
ICU 1(Loss as Cycle Length %) Method (Future Volume Alternative)

Intersection #32 Park Ave/19th St

Cycle (sec):	100	Critical Vol./Cap.(X):	0.544
Loss Time (sec):	0 (Y+R=4.0 sec)	Average Delay (sec/veh):	xxxxxx
Optimal Cycle:	41	Level Of Service:	A

Street Name:	Park Avenue						19th St					
Approach:	North Bound			South Bound			East Bound			West Bound		
Movement:	L -	T -	R	L -	T -	R	L -	T -	R	L -	T -	R
Control:	Permitted			Permitted			Prot+Permit			Prot+Permit		
Rights:	Include			Include			Include			Include		
Min. Green:	0	0	0	0	0	0	0	0	0	0	0	0
Lanes:	2 0	0 0	1	0 0	0 0	0	1 0	2 0	1	1 0	3 0	0
Volume Module:												
Base Vol:	119	0	153	0	0	0	20	1069	70	183	1034	0
Growth Adj:	1.00	1.00	1.00	1.00	1.00	1.00	1.00	1.00	1.00	1.00	1.00	1.00
Initial Bse:	119	0	153	0	0	0	20	1069	70	183	1034	0
Added Vol:	0	0	0	0	0	0	0	0	0	0	0	0
PasserByVol:	0	0	0	0	0	0	0	0	0	0	0	0
Initial Fut:	119	0	153	0	0	0	20	1069	70	183	1034	0
User Adj:	1.00	1.00	1.00	1.00	1.00	1.00	1.00	1.00	1.00	1.00	1.00	1.00
PHF Adj:	1.00	1.00	1.00	1.00	1.00	1.00	1.00	1.00	1.00	1.00	1.00	1.00
PHF Volume:	119	0	153	0	0	0	20	1069	70	183	1034	0
Reduct Vol:	0	0	0	0	0	0	0	0	0	0	0	0
Reduced Vol:	119	0	153	0	0	0	20	1069	70	183	1034	0
PCE Adj:	1.00	1.00	1.00	1.00	1.00	1.00	1.00	1.00	1.00	1.00	1.00	1.00
MLF Adj:	1.00	1.00	1.00	1.00	1.00	1.00	1.00	1.00	1.00	1.00	1.00	1.00
FinalVolume:	119	0	153	0	0	0	20	1069	70	183	1034	0
Saturation Flow Module:												
Sat/Lane:	1600	1600	1600	1600	1600	1600	1600	1600	1600	1600	1600	1600
Adjustment:	1.00	1.00	1.00	1.00	1.00	1.00	1.00	1.00	1.00	1.00	1.00	1.00
Lanes:	2.00	0.00	1.00	0.00	0.00	0.00	1.00	2.00	1.00	1.00	3.00	0.00
Final Sat.:	3200	0	1600	0	0	0	1600	3200	1600	1600	4800	0
Capacity Analysis Module:												
Vol/Sat:	0.04	0.00	0.10	0.00	0.00	0.00	0.01	0.33	0.04	0.11	0.22	0.00
Crit Moves:			****					****		****		

Newport Banning Ranch
Existing Conditions - ICU
PM Peak Hour

Level Of Service Computation Report
ICU 1(Loss as Cycle Length %) Method (Future Volume Alternative)

Intersection #33 Harbor Blvd/19th St

Cycle (sec):	100	Critical Vol./Cap.(X):	0.560
Loss Time (sec):	0 (Y+R=4.0 sec)	Average Delay (sec/veh):	xxxxxx
Optimal Cycle:	52	Level Of Service:	A

Street Name:	Harbor Boulevard						19th Street					
Approach:	North Bound			South Bound			East Bound			West Bound		
Movement:	L - T - R			L - T - R			L - T - R			L - T - R		
Control:	Protected			Protected			Protected			Protected		
Rights:	Include			Include			Include			Include		
Min. Green:	0	0	0	0	0	0	0	0	0	0	0	0
Lanes:	1 0 2	1 0		1 0 2	0 1		2 0 2	1 0		1 0 3	0 1	
Volume Module:												
Base Vol:	75	453	23	183	614	317	481	749	65	188	791	215
Growth Adj:	1.00	1.00	1.00	1.00	1.00	1.00	1.00	1.00	1.00	1.00	1.00	1.00
Initial Bse:	75	453	23	183	614	317	481	749	65	188	791	215
Added Vol:	0	0	0	0	0	0	0	0	0	0	0	0
PasserByVol:	0	0	0	0	0	0	0	0	0	0	0	0
Initial Fut:	75	453	23	183	614	317	481	749	65	188	791	215
User Adj:	1.00	1.00	1.00	1.00	1.00	1.00	1.00	1.00	1.00	1.00	1.00	1.00
PHF Adj:	1.00	1.00	1.00	1.00	1.00	1.00	1.00	1.00	1.00	1.00	1.00	1.00
PHF Volume:	75	453	23	183	614	317	481	749	65	188	791	215
Reduct Vol:	0	0	0	0	0	0	0	0	0	0	0	0
Reduced Vol:	75	453	23	183	614	317	481	749	65	188	791	215
PCE Adj:	1.00	1.00	1.00	1.00	1.00	1.00	1.00	1.00	1.00	1.00	1.00	1.00
MLF Adj:	1.00	1.00	1.00	1.00	1.00	1.00	1.00	1.00	1.00	1.00	1.00	1.00
FinalVolume:	75	453	23	183	614	317	481	749	65	188	791	215
Saturation Flow Module:												
Sat/Lane:	1600	1600	1600	1600	1600	1600	1600	1600	1600	1600	1600	1600
Adjustment:	1.00	1.00	1.00	1.00	1.00	1.00	1.00	1.00	1.00	1.00	1.00	1.00
Lanes:	1.00	2.86	0.14	1.00	2.00	1.00	2.00	2.76	0.24	1.00	3.00	1.00
Final Sat.:	1600	4568	232	1600	3200	1600	3200	4417	383	1600	4800	1600
Capacity Analysis Module:												
Vol/Sat:	0.05	0.10	0.10	0.11	0.19	0.20	0.15	0.17	0.17	0.12	0.16	0.13
Crit Moves:	****					****	****				****	

Newport Banning Ranch
Existing Conditions - ICU
PM Peak Hour

Level Of Service Computation Report
ICU 1(Loss as Cycle Length %) Method (Future Volume Alternative)

Intersection #34 Newport Blvd/19th St

Cycle (sec):	120	Critical Vol./Cap.(X):	0.772
Loss Time (sec):	0 (Y+R=4.0 sec)	Average Delay (sec/veh):	xxxxxx
Optimal Cycle:	100	Level Of Service:	C

Street Name:	Newport Boulevard						19th Street					
Approach:	North Bound			South Bound			East Bound			West Bound		
Movement:	L - T - R			L - T - R			L - T - R			L - T - R		
Control:	Protected			Protected			Split Phase			Split Phase		
Rights:	Include			Include			Include			Include		
Min. Green:	0	0	0	0	0	0	0	0	0	0	0	0
Lanes:	1 0	3 1	0	1 0	3 1	1	2 1	1 0	1	1 0	2 1	1
Volume Module:												
Base Vol:	65	2649	38	202	3114	757	731	171	33	54	321	152
Growth Adj:	1.00	1.00	1.00	1.00	1.00	1.00	1.00	1.00	1.00	1.00	1.00	1.00
Initial Bse:	65	2649	38	202	3114	757	731	171	33	54	321	152
Added Vol:	0	0	0	0	0	0	0	0	0	0	0	0
PasserByVol:	0	0	0	0	0	0	0	0	0	0	0	0
Initial Fut:	65	2649	38	202	3114	757	731	171	33	54	321	152
User Adj:	1.00	1.00	1.00	1.00	1.00	1.00	1.00	1.00	1.00	1.00	1.00	1.00
PHF Adj:	1.00	1.00	1.00	1.00	1.00	1.00	1.00	1.00	1.00	1.00	1.00	1.00
PHF Volume:	65	2649	38	202	3114	757	731	171	33	54	321	152
Reduct Vol:	0	0	0	0	0	0	0	0	0	0	0	0
Reduced Vol:	65	2649	38	202	3114	757	731	171	33	54	321	152
PCE Adj:	1.00	1.00	1.00	1.00	1.00	1.00	1.00	1.00	1.00	1.00	1.00	1.00
MLF Adj:	1.00	1.00	1.00	1.00	1.00	1.00	1.00	1.00	1.00	1.00	1.00	1.00
FinalVolume:	65	2649	38	202	3114	757	731	171	33	54	321	152
Saturation Flow Module:												
Sat/Lane:	1600	1600	1600	1600	1600	1600	1600	1600	1600	1600	1600	1600
Adjustment:	1.00	1.00	1.00	1.00	1.00	1.00	1.00	1.00	1.00	1.00	1.00	1.00
Lanes:	1.00	3.94	0.06	1.00	4.00	1.00	3.00	1.00	1.00	1.00	2.71	1.29
Final Sat.:	1600	6309	91	1600	6400	1600	4800	1600	1600	1600	4343	2057
Capacity Analysis Module:												
Vol/Sat:	0.04	0.42	0.42	0.13	0.49	0.47	0.15	0.11	0.02	0.03	0.07	0.07
Crit Moves:		****		****			****				****	

Newport Banning Ranch
Existing Conditions - ICU
PM Peak Hour

Level Of Service Computation Report
ICU 1(Loss as Cycle Length %) Method (Future Volume Alternative)

Intersection #35 Newport Blvd/Broadway

Cycle (sec):	120	Critical Vol./Cap.(X):	0.722
Loss Time (sec):	0 (Y+R=4.0 sec)	Average Delay (sec/veh):	xxxxxx
Optimal Cycle:	67	Level Of Service:	C

Street Name:	Newport Boulevard						Broadway					
Approach:	North Bound			South Bound			East Bound			West Bound		
Movement:	L - T - R			L - T - R			L - T - R			L - T - R		
Control:	Protected			Protected			Permitted			Permitted		
Rights:	Include			Include			Include			Include		
Min. Green:	0	0	0	0	0	0	0	0	0	0	0	0
Lanes:	1 0 3	1 0		1 0 3	0 1		0 1 0	0 1		1 0 0	1 0	
Volume Module:												
Base Vol:	7	2542	55	142	3061	62	18	23	14	33	15	95
Growth Adj:	1.00	1.00	1.00	1.00	1.00	1.00	1.00	1.00	1.00	1.00	1.00	1.00
Initial Bse:	7	2542	55	142	3061	62	18	23	14	33	15	95
Added Vol:	0	0	0	0	0	0	0	0	0	0	0	0
PasserByVol:	0	0	0	0	0	0	0	0	0	0	0	0
Initial Fut:	7	2542	55	142	3061	62	18	23	14	33	15	95
User Adj:	1.00	1.00	1.00	1.00	1.00	1.00	1.00	1.00	1.00	1.00	1.00	1.00
PHF Adj:	1.00	1.00	1.00	1.00	1.00	1.00	1.00	1.00	1.00	1.00	1.00	1.00
PHF Volume:	7	2542	55	142	3061	62	18	23	14	33	15	95
Reduct Vol:	0	0	0	0	0	0	0	0	0	0	0	0
Reduced Vol:	7	2542	55	142	3061	62	18	23	14	33	15	95
PCE Adj:	1.00	1.00	1.00	1.00	1.00	1.00	1.00	1.00	1.00	1.00	1.00	1.00
MLF Adj:	1.00	1.00	1.00	1.00	1.00	1.00	1.00	1.00	1.00	1.00	1.00	1.00
FinalVolume:	7	2542	55	142	3061	62	18	23	14	33	15	95
Saturation Flow Module:												
Sat/Lane:	1600	1600	1600	1600	1600	1600	1600	1600	1600	1600	1600	1600
Adjustment:	1.00	1.00	1.00	1.00	1.00	1.00	1.00	1.00	1.00	1.00	1.00	1.00
Lanes:	1.00	3.92	0.08	1.00	3.00	1.00	0.44	0.56	1.00	1.00	0.14	0.86
Final Sat.:	1600	6264	136	1600	4800	1600	702	898	1600	1600	218	1382
Capacity Analysis Module:												
Vol/Sat:	0.00	0.41	0.41	0.09	0.64	0.04	0.01	0.03	0.01	0.02	0.07	0.07
Crit Moves:	****				****		****				****	

Newport Banning Ranch
Existing Conditions - ICU
PM Peak Hour

Level Of Service Computation Report
ICU 1(Loss as Cycle Length %) Method (Future Volume Alternative)

Intersection #36 Newport Blvd/Harbor Blvd

Cycle (sec):	120	Critical Vol./Cap.(X):	0.973
Loss Time (sec):	0 (Y+R=4.0 sec)	Average Delay (sec/veh):	xxxxxx
Optimal Cycle:	180	Level Of Service:	E

Street Name:	Newport Boulevard						Harbor Boulevard					
Approach:	North Bound			South Bound			East Bound			West Bound		
Movement:	L - T - R			L - T - R			L - T - R			L - T - R		
Control:	Protected			Protected			Protected			Protected		
Rights:	Include			Include			Ovl			Include		
Min. Green:	0	0	0	0	0	0	0	0	0	0	0	0
Lanes:	2 0 4 0 0			0 0 2 1 0			1 0 0 0 2			0 0 0 0 0		
Volume Module:												
Base Vol:	726	2480	0	0	3160	50	123	0	537	0	0	0
Growth Adj:	1.00	1.00	1.00	1.00	1.00	1.00	1.00	1.00	1.00	1.00	1.00	1.00
Initial Bse:	726	2480	0	0	3160	50	123	0	537	0	0	0
Added Vol:	0	0	0	0	0	0	0	0	0	0	0	0
PasserByVol:	0	0	0	0	0	0	0	0	0	0	0	0
Initial Fut:	726	2480	0	0	3160	50	123	0	537	0	0	0
User Adj:	1.00	1.00	1.00	1.00	1.00	1.00	1.00	1.00	1.00	1.00	1.00	1.00
PHF Adj:	1.00	1.00	1.00	1.00	1.00	1.00	1.00	1.00	1.00	1.00	1.00	1.00
PHF Volume:	726	2480	0	0	3160	50	123	0	537	0	0	0
Reduct Vol:	0	0	0	0	0	0	0	0	0	0	0	0
Reduced Vol:	726	2480	0	0	3160	50	123	0	537	0	0	0
PCE Adj:	1.00	1.00	1.00	1.00	1.00	1.00	1.00	1.00	1.00	1.00	1.00	1.00
MLF Adj:	1.00	1.00	1.00	1.00	1.00	1.00	1.00	1.00	1.00	1.00	1.00	1.00
FinalVolume:	726	2480	0	0	3160	50	123	0	537	0	0	0
OvlAdjVol:									0			
Saturation Flow Module:												
Sat/Lane:	1600	1600	1600	1600	1600	1600	1600	1600	1600	1600	1600	1600
Adjustment:	1.00	1.00	1.00	1.00	1.00	1.00	1.00	1.00	1.00	1.00	1.00	1.00
Lanes:	2.00	4.00	0.00	0.00	2.95	0.05	1.00	0.00	2.00	0.00	0.00	0.00
Final Sat.:	3200	6400	0	0	4725	75	1600	0	3200	0	0	0
Capacity Analysis Module:												
Vol/Sat:	0.23	0.39	0.00	0.00	0.67	0.67	0.08	0.00	0.17	0.00	0.00	0.00
OvlAdjV/S:									0.00			
Crit Moves:	****				****		****					

Newport Banning Ranch
Existing Conditions - ICU
PM Peak Hour

Level Of Service Computation Report
ICU 1(Loss as Cycle Length %) Method (Future Volume Alternative)

Intersection #37 Newport Blvd/18th St (Rochester St)

Cycle (sec):	120	Critical Vol./Cap.(X):	0.971
Loss Time (sec):	0 (Y+R=4.0 sec)	Average Delay (sec/veh):	xxxxxx
Optimal Cycle:	180	Level Of Service:	E

Street Name:	Newport Boulevard						18th Street (Rochester Street)					
Approach:	North Bound			South Bound			East Bound			West Bound		
Movement:	L - T - R			L - T - R			L - T - R			L - T - R		
Control:	Protected			Protected			Split Phase			Split Phase		
Rights:	Include			Include			Include			Include		
Min. Green:	0	0	0	0	0	0	0	0	0	0	0	0
Lanes:	1 0 3	1 0		1 0 3	0 1		2 0 1	0 1		1 0 0	1 0	
Volume Module:												
Base Vol:	111	2724	15	125	3515	144	251	75	48	18	124	22
Growth Adj:	1.00	1.00	1.00	1.00	1.00	1.00	1.00	1.00	1.00	1.00	1.00	1.00
Initial Bse:	111	2724	15	125	3515	144	251	75	48	18	124	22
Added Vol:	0	0	0	0	0	0	0	0	0	0	0	0
PasserByVol:	0	0	0	0	0	0	0	0	0	0	0	0
Initial Fut:	111	2724	15	125	3515	144	251	75	48	18	124	22
User Adj:	1.00	1.00	1.00	1.00	1.00	1.00	1.00	1.00	1.00	1.00	1.00	1.00
PHF Adj:	1.00	1.00	1.00	1.00	1.00	1.00	1.00	1.00	1.00	1.00	1.00	1.00
PHF Volume:	111	2724	15	125	3515	144	251	75	48	18	124	22
Reduct Vol:	0	0	0	0	0	0	0	0	0	0	0	0
Reduced Vol:	111	2724	15	125	3515	144	251	75	48	18	124	22
PCE Adj:	1.00	1.00	1.00	1.00	1.00	1.00	1.00	1.00	1.00	1.00	1.00	1.00
MLF Adj:	1.00	1.00	1.00	1.00	1.00	1.00	1.00	1.00	1.00	1.00	1.00	1.00
FinalVolume:	111	2724	15	125	3515	144	251	75	48	18	124	22
Saturation Flow Module:												
Sat/Lane:	1600	1600	1600	1600	1600	1600	1600	1600	1600	1600	1600	1600
Adjustment:	1.00	1.00	1.00	1.00	1.00	1.00	1.00	1.00	1.00	1.00	1.00	1.00
Lanes:	1.00	3.98	0.02	1.00	3.00	1.00	2.00	1.00	1.00	1.00	0.85	0.15
Final Sat.:	1600	6365	35	1600	4800	1600	3200	1600	1600	1600	1359	241
Capacity Analysis Module:												
Vol/Sat:	0.07	0.43	0.43	0.08	0.73	0.09	0.08	0.05	0.03	0.01	0.09	0.09
Crit Moves:	****				****		****					****

Newport Banning Ranch
Existing Conditions - ICU
PM Peak Hour

Level Of Service Computation Report
ICU 1(Loss as Cycle Length %) Method (Future Volume Alternative)

Intersection #38 Placentia Ave/18th St

Cycle (sec):	100	Critical Vol./Cap.(X):	0.466
Loss Time (sec):	0 (Y+R=4.0 sec)	Average Delay (sec/veh):	xxxxxx
Optimal Cycle:	35	Level Of Service:	A

Street Name:	Placentia Avenue						18th Street					
Approach:	North Bound			South Bound			East Bound			West Bound		
Movement:	L - T - R			L - T - R			L - T - R			L - T - R		
Control:	Protected			Protected			Permitted			Permitted		
Rights:	Include			Include			Include			Include		
Min. Green:	0	0	0	0	0	0	0	0	0	0	0	0
Lanes:	1 0	1 1	0	1 0	1 1	0	1 0	0 1	0	1 0	0 1	0
Volume Module:												
Base Vol:	14	889	58	45	523	47	60	169	27	16	87	80
Growth Adj:	1.00	1.00	1.00	1.00	1.00	1.00	1.00	1.00	1.00	1.00	1.00	1.00
Initial Bse:	14	889	58	45	523	47	60	169	27	16	87	80
Added Vol:	0	0	0	0	0	0	0	0	0	0	0	0
PasserByVol:	0	0	0	0	0	0	0	0	0	0	0	0
Initial Fut:	14	889	58	45	523	47	60	169	27	16	87	80
User Adj:	1.00	1.00	1.00	1.00	1.00	1.00	1.00	1.00	1.00	1.00	1.00	1.00
PHF Adj:	1.00	1.00	1.00	1.00	1.00	1.00	1.00	1.00	1.00	1.00	1.00	1.00
PHF Volume:	14	889	58	45	523	47	60	169	27	16	87	80
Reduct Vol:	0	0	0	0	0	0	0	0	0	0	0	0
Reduced Vol:	14	889	58	45	523	47	60	169	27	16	87	80
PCE Adj:	1.00	1.00	1.00	1.00	1.00	1.00	1.00	1.00	1.00	1.00	1.00	1.00
MLF Adj:	1.00	1.00	1.00	1.00	1.00	1.00	1.00	1.00	1.00	1.00	1.00	1.00
FinalVolume:	14	889	58	45	523	47	60	169	27	16	87	80
Saturation Flow Module:												
Sat/Lane:	1600	1600	1600	1600	1600	1600	1600	1600	1600	1600	1600	1600
Adjustment:	1.00	1.00	1.00	1.00	1.00	1.00	1.00	1.00	1.00	1.00	1.00	1.00
Lanes:	1.00	1.88	0.12	1.00	1.84	0.16	1.00	0.86	0.14	1.00	0.52	0.48
Final Sat.:	1600	3004	196	1600	2936	264	1600	1380	220	1600	834	766
Capacity Analysis Module:												
Vol/Sat:	0.01	0.30	0.30	0.03	0.18	0.18	0.04	0.12	0.12	0.01	0.10	0.10
Crit Moves:		****			****			****			****	

Newport Banning Ranch
Existing Conditions - ICU
PM Peak Hour

Level Of Service Computation Report
2000 HCM 4-Way Stop Method (Future Volume Alternative)

Intersection #39 Whittier Ave/17th St

Cycle (sec): 100 | Critical Vol./Cap.(X): 0.110
Loss Time (sec): 0 (Y+R=4.0 sec) | Average Delay (sec/veh): 7.3
Optimal Cycle: 0 | Level Of Service: A

Street Name:	Whittier Avenue						17th St					
Approach:	North Bound			South Bound			East Bound			West Bound		
Movement:	L - T - R			L - T - R			L - T - R			L - T - R		
Control:	Stop Sign			Stop Sign			Stop Sign			Stop Sign		
Rights:	Include			Include			Include			Include		
Min. Green:	0	0	0	0	0	0	0	0	0	0	0	0
Lanes:	0 0 0 1 0			0 0 1! 0 0			0 1 0 0 0			0 0 1! 0 0		
Volume Module:												
Base Vol:	0	11	8	62	9	3	2	14	0	14	9	83
Growth Adj:	1.00	1.00	1.00	1.00	1.00	1.00	1.00	1.00	1.00	1.00	1.00	1.00
Initial Bse:	0	11	8	62	9	3	2	14	0	14	9	83
Added Vol:	0	0	0	0	0	0	0	0	0	0	0	0
PasserByVol:	0	0	0	0	0	0	0	0	0	0	0	0
Initial Fut:	0	11	8	62	9	3	2	14	0	14	9	83
User Adj:	1.00	1.00	1.00	1.00	1.00	1.00	1.00	1.00	1.00	1.00	1.00	1.00
PHF Adj:	1.00	1.00	1.00	1.00	1.00	1.00	1.00	1.00	1.00	1.00	1.00	1.00
PHF Volume:	0	11	8	62	9	3	2	14	0	14	9	83
Reduct Vol:	0	0	0	0	0	0	0	0	0	0	0	0
Reduced Vol:	0	11	8	62	9	3	2	14	0	14	9	83
PCE Adj:	1.00	1.00	1.00	1.00	1.00	1.00	1.00	1.00	1.00	1.00	1.00	1.00
MLF Adj:	1.00	1.00	1.00	1.00	1.00	1.00	1.00	1.00	1.00	1.00	1.00	1.00
FinalVolume:	0	11	8	62	9	3	2	14	0	14	9	83
Saturation Flow Module:												
Adjustment:	1.00	1.00	1.00	1.00	1.00	1.00	1.00	1.00	1.00	1.00	1.00	1.00
Lanes:	0.00	0.58	0.42	0.84	0.12	0.04	0.12	0.88	0.00	0.13	0.08	0.79
Final Sat.:	0	510	371	685	99	33	104	729	0	127	81	752
Capacity Analysis Module:												
Vol/Sat:	xxxx	0.02	0.02	0.09	0.09	0.09	0.02	0.02	xxxx	0.11	0.11	0.11
Crit Moves:		****			****		****				****	
Delay/Veh:	0.0	7.0	7.0	7.7	7.7	7.7	7.3	7.3	0.0	7.1	7.1	7.1
Delay Adj:	1.00	1.00	1.00	1.00	1.00	1.00	1.00	1.00	1.00	1.00	1.00	1.00
AdjDel/Veh:	0.0	7.0	7.0	7.7	7.7	7.7	7.3	7.3	0.0	7.1	7.1	7.1
LOS by Move:	*	A	A	A	A	A	A	A	*	A	A	A
ApproachDel:		7.0			7.7			7.3			7.1	
Delay Adj:		1.00			1.00			1.00			1.00	
ApprAdjDel:		7.0			7.7			7.3			7.1	
LOS by Appr:		A			A			A			A	
AllWayAvgQ:	0.0	0.0	0.0	0.1	0.1	0.1	0.0	0.0	0.0	0.1	0.1	0.1

Newport Banning Ranch
Existing Conditions - ICU
PM Peak Hour

Note: Queue reported is the number of cars per lane.

Newport Banning Ranch
Existing Conditions - ICU
PM Peak Hour

Level Of Service Computation Report
2000 HCM 4-Way Stop Method (Future Volume Alternative)

Intersection #40 Monrovia Ave/17th St

Cycle (sec):	100	Critical Vol./Cap.(X):	0.255
Loss Time (sec):	0 (Y+R=4.0 sec)	Average Delay (sec/veh):	8.8
Optimal Cycle:	0	Level Of Service:	A

Street Name:	Monrovia Avenue						17th Street					
Approach:	North Bound			South Bound			East Bound			West Bound		
Movement:	L -	T -	R	L -	T -	R	L -	T -	R	L -	T -	R
Control:	Stop Sign			Stop Sign			Stop Sign			Stop Sign		
Rights:	Include			Include			Include			Include		
Min. Green:	0	0	0	0	0	0	0	0	0	0	0	0
Lanes:	0 0	1! 0	0	0 0	1! 0	0	0 0	1! 0	0	0 0	1! 0	0
Volume Module:												
Base Vol:	25	120	46	43	65	12	14	79	43	21	77	47
Growth Adj:	1.00	1.00	1.00	1.00	1.00	1.00	1.00	1.00	1.00	1.00	1.00	1.00
Initial Bse:	25	120	46	43	65	12	14	79	43	21	77	47
Added Vol:	0	0	0	0	0	0	0	0	0	0	0	0
PasserByVol:	0	0	0	0	0	0	0	0	0	0	0	0
Initial Fut:	25	120	46	43	65	12	14	79	43	21	77	47
User Adj:	1.00	1.00	1.00	1.00	1.00	1.00	1.00	1.00	1.00	1.00	1.00	1.00
PHF Adj:	1.00	1.00	1.00	1.00	1.00	1.00	1.00	1.00	1.00	1.00	1.00	1.00
PHF Volume:	25	120	46	43	65	12	14	79	43	21	77	47
Reduct Vol:	0	0	0	0	0	0	0	0	0	0	0	0
Reduced Vol:	25	120	46	43	65	12	14	79	43	21	77	47
PCE Adj:	1.00	1.00	1.00	1.00	1.00	1.00	1.00	1.00	1.00	1.00	1.00	1.00
MLF Adj:	1.00	1.00	1.00	1.00	1.00	1.00	1.00	1.00	1.00	1.00	1.00	1.00
FinalVolume:	25	120	46	43	65	12	14	79	43	21	77	47
Saturation Flow Module:												
Adjustment:	1.00	1.00	1.00	1.00	1.00	1.00	1.00	1.00	1.00	1.00	1.00	1.00
Lanes:	0.13	0.63	0.24	0.36	0.54	0.10	0.10	0.58	0.32	0.14	0.54	0.32
Final Sat.:	98	470	180	254	385	71	75	426	232	106	390	238
Capacity Analysis Module:												
Vol/Sat:	0.26	0.26	0.26	0.17	0.17	0.17	0.19	0.19	0.19	0.20	0.20	0.20
Crit Moves:		****			****				****		****	
Delay/Veh:	9.0	9.0	9.0	8.7	8.7	8.7	8.6	8.6	8.6	8.7	8.7	8.7
Delay Adj:	1.00	1.00	1.00	1.00	1.00	1.00	1.00	1.00	1.00	1.00	1.00	1.00
AdjDel/Veh:	9.0	9.0	9.0	8.7	8.7	8.7	8.6	8.6	8.6	8.7	8.7	8.7
LOS by Move:	A	A	A	A	A	A	A	A	A	A	A	A
ApproachDel:	9.0			8.7			8.6			8.7		
Delay Adj:	1.00			1.00			1.00			1.00		
ApprAdjDel:	9.0			8.7			8.6			8.7		
LOS by Appr:	A			A			A			A		
AllWayAvgQ:	0.3	0.3	0.3	0.2	0.2	0.2	0.2	0.2	0.2	0.2	0.2	0.2

Newport Banning Ranch
Existing Conditions - ICU
PM Peak Hour

Note: Queue reported is the number of cars per lane.

Newport Banning Ranch
Existing Conditions - ICU
PM Peak Hour

Level Of Service Computation Report
ICU 1(Loss as Cycle Length %) Method (Future Volume Alternative)

Intersection #41 Placentia Ave/17th St

Cycle (sec):	100	Critical Vol./Cap.(X):	0.518
Loss Time (sec):	0 (Y+R=4.0 sec)	Average Delay (sec/veh):	xxxxxx
Optimal Cycle:	30	Level Of Service:	A

Street Name:	Placentia Avenue						17th St					
Approach:	North Bound			South Bound			East Bound			West Bound		
Movement:	L - T - R			L - T - R			L - T - R			L - T - R		
Control:	Permitted			Permitted			Permitted			Permitted		
Rights:	Include			Include			Include			Include		
Min. Green:	0	0	0	0	0	0	0	0	0	0	0	0
Lanes:	1 0	1 1	0	1 0	1 1	0	1 0	0 1	0	1 0	0 1	0
Volume Module:												
Base Vol:	49	668	69	113	387	26	52	151	34	37	108	187
Growth Adj:	1.00	1.00	1.00	1.00	1.00	1.00	1.00	1.00	1.00	1.00	1.00	1.00
Initial Bse:	49	668	69	113	387	26	52	151	34	37	108	187
Added Vol:	0	0	0	0	0	0	0	0	0	0	0	0
PasserByVol:	0	0	0	0	0	0	0	0	0	0	0	0
Initial Fut:	49	668	69	113	387	26	52	151	34	37	108	187
User Adj:	1.00	1.00	1.00	1.00	1.00	1.00	1.00	1.00	1.00	1.00	1.00	1.00
PHF Adj:	1.00	1.00	1.00	1.00	1.00	1.00	1.00	1.00	1.00	1.00	1.00	1.00
PHF Volume:	49	668	69	113	387	26	52	151	34	37	108	187
Reduct Vol:	0	0	0	0	0	0	0	0	0	0	0	0
Reduced Vol:	49	668	69	113	387	26	52	151	34	37	108	187
PCE Adj:	1.00	1.00	1.00	1.00	1.00	1.00	1.00	1.00	1.00	1.00	1.00	1.00
MLF Adj:	1.00	1.00	1.00	1.00	1.00	1.00	1.00	1.00	1.00	1.00	1.00	1.00
FinalVolume:	49	668	69	113	387	26	52	151	34	37	108	187
Saturation Flow Module:												
Sat/Lane:	1600	1600	1600	1600	1600	1600	1600	1600	1600	1600	1600	1600
Adjustment:	1.00	1.00	1.00	1.00	1.00	1.00	1.00	1.00	1.00	1.00	1.00	1.00
Lanes:	1.00	1.81	0.19	1.00	1.87	0.13	1.00	0.82	0.18	1.00	0.37	0.63
Final Sat.:	1600	2900	300	1600	2999	201	1600	1306	294	1600	586	1014
Capacity Analysis Module:												
Vol/Sat:	0.03	0.23	0.23	0.07	0.13	0.13	0.03	0.12	0.12	0.02	0.18	0.18
Crit Moves:		****		****			****				****	

Newport Banning Ranch
Existing Conditions - ICU
PM Peak Hour

Level Of Service Computation Report
2000 HCM 4-Way Stop Method (Future Volume Alternative)

Intersection #42 Pomona Ave/17th St

Cycle (sec): 100 | Critical Vol./Cap.(X): 0.585
Loss Time (sec): 0 (Y+R=4.0 sec) | Average Delay (sec/veh): 13.9
Optimal Cycle: 0 | Level Of Service: B

Street Name:	Pomona Avenue						17th Street					
Approach:	North Bound			South Bound			East Bound			West Bound		
Movement:	L - T - R			L - T - R			L - T - R			L - T - R		
Control:	Stop Sign			Stop Sign			Stop Sign			Stop Sign		
Rights:	Include			Include			Include			Include		
Min. Green:	0	0	0	0	0	0	0	0	0	0	0	0
Lanes:	0 0	1! 0	0	0 0	1! 0	0	1 0	0 1	0	1 0	1 0	1
Volume Module:												
Base Vol:	20	130	53	65	86	32	52	308	16	43	297	102
Growth Adj:	1.00	1.00	1.00	1.00	1.00	1.00	1.00	1.00	1.00	1.00	1.00	1.00
Initial Bse:	20	130	53	65	86	32	52	308	16	43	297	102
Added Vol:	0	0	0	0	0	0	0	0	0	0	0	0
PasserByVol:	0	0	0	0	0	0	0	0	0	0	0	0
Initial Fut:	20	130	53	65	86	32	52	308	16	43	297	102
User Adj:	1.00	1.00	1.00	1.00	1.00	1.00	1.00	1.00	1.00	1.00	1.00	1.00
PHF Adj:	1.00	1.00	1.00	1.00	1.00	1.00	1.00	1.00	1.00	1.00	1.00	1.00
PHF Volume:	20	130	53	65	86	32	52	308	16	43	297	102
Reduct Vol:	0	0	0	0	0	0	0	0	0	0	0	0
Reduced Vol:	20	130	53	65	86	32	52	308	16	43	297	102
PCE Adj:	1.00	1.00	1.00	1.00	1.00	1.00	1.00	1.00	1.00	1.00	1.00	1.00
MLF Adj:	1.00	1.00	1.00	1.00	1.00	1.00	1.00	1.00	1.00	1.00	1.00	1.00
FinalVolume:	20	130	53	65	86	32	52	308	16	43	297	102
Saturation Flow Module:												
Adjustment:	1.00	1.00	1.00	1.00	1.00	1.00	1.00	1.00	1.00	1.00	1.00	1.00
Lanes:	0.10	0.64	0.26	0.36	0.47	0.17	1.00	0.95	0.05	1.00	1.00	1.00
Final Sat.:	52	339	138	183	243	90	509	527	27	514	556	620
Capacity Analysis Module:												
Vol/Sat:	0.38	0.38	0.38	0.35	0.35	0.35	0.10	0.58	0.58	0.08	0.53	0.16
Crit Moves:			****		****			****			****	
Delay/Veh:	12.6	12.6	12.6	12.4	12.4	12.4	10.3	16.8	16.8	10.0	15.4	9.3
Delay Adj:	1.00	1.00	1.00	1.00	1.00	1.00	1.00	1.00	1.00	1.00	1.00	1.00
AdjDel/Veh:	12.6	12.6	12.6	12.4	12.4	12.4	10.3	16.8	16.8	10.0	15.4	9.3
LOS by Move:	B	B	B	B	B	B	B	C	C	B	C	A
ApproachDel:	12.6			12.4			15.9			13.5		
Delay Adj:	1.00			1.00			1.00			1.00		
ApprAdjDel:	12.6			12.4			15.9			13.5		
LOS by Appr:	B			B			C			B		
AllWayAvgQ:	0.5	0.5	0.5	0.4	0.4	0.4	0.1	1.2	1.2	0.1	1.0	0.2

Newport Banning Ranch
Existing Conditions - ICU
PM Peak Hour

Note: Queue reported is the number of cars per lane.

Newport Banning Ranch
Existing Conditions - ICU
PM Peak Hour

Level Of Service Computation Report
ICU 1(Loss as Cycle Length %) Method (Future Volume Alternative)

Intersection #43 Superior Ave/17th St

Cycle (sec):	100	Critical Vol./Cap.(X):	0.747
Loss Time (sec):	0 (Y+R=4.0 sec)	Average Delay (sec/veh):	xxxxxx
Optimal Cycle:	90	Level Of Service:	C

Street Name:	Superior Avenue						17th Street					
Approach:	North Bound			South Bound			East Bound			West Bound		
Movement:	L -	T -	R	L -	T -	R	L -	T -	R	L -	T -	R
Control:	Prot+Permit			Prot+Permit			Prot+Permit			Prot+Permit		
Rights:	Include			Include			Include			Include		
Min. Green:	0	0	0	0	0	0	0	0	0	0	0	0
Lanes:	1 0	0 1	1	1 0	1 1	0	1 0	1 1	0	1 0	1 1	0
Volume Module:												
Base Vol:	100	184	620	89	287	84	25	497	65	423	436	81
Growth Adj:	1.00	1.00	1.00	1.00	1.00	1.00	1.00	1.00	1.00	1.00	1.00	1.00
Initial Bse:	100	184	620	89	287	84	25	497	65	423	436	81
Added Vol:	0	0	0	0	0	0	0	0	0	0	0	0
PasserByVol:	0	0	0	0	0	0	0	0	0	0	0	0
Initial Fut:	100	184	620	89	287	84	25	497	65	423	436	81
User Adj:	1.00	1.00	1.00	1.00	1.00	1.00	1.00	1.00	1.00	1.00	1.00	1.00
PHF Adj:	1.00	1.00	1.00	1.00	1.00	1.00	1.00	1.00	1.00	1.00	1.00	1.00
PHF Volume:	100	184	620	89	287	84	25	497	65	423	436	81
Reduct Vol:	0	0	0	0	0	0	0	0	0	0	0	0
Reduced Vol:	100	184	620	89	287	84	25	497	65	423	436	81
PCE Adj:	1.00	1.00	1.00	1.00	1.00	1.00	1.00	1.00	1.00	1.00	1.00	1.00
MLF Adj:	1.00	1.00	1.00	1.00	1.00	1.00	1.00	1.00	1.00	1.00	1.00	1.00
FinalVolume:	100	184	620	89	287	84	25	497	65	423	436	81
Saturation Flow Module:												
Sat/Lane:	1600	1600	1600	1600	1600	1600	1600	1600	1600	1600	1600	1600
Adjustment:	1.00	1.00	1.00	1.00	1.00	1.00	1.00	1.00	1.00	1.00	1.00	1.00
Lanes:	1.00	0.46	1.54	1.00	1.55	0.45	1.00	1.77	0.23	1.00	1.69	0.31
Final Sat.:	1600	732	2468	1600	2475	725	1600	2830	370	1600	2699	501
Capacity Analysis Module:												
Vol/Sat:	0.06	0.25	0.25	0.06	0.12	0.12	0.02	0.18	0.18	0.26	0.16	0.16
Crit Moves:		****		****				****		****		

Newport Banning Ranch
Existing Conditions - ICU
PM Peak Hour

Level Of Service Computation Report
ICU 1(Loss as Cycle Length %) Method (Future Volume Alternative)

Intersection #44 Newport Blvd/17th St

Cycle (sec):	120	Critical Vol./Cap.(X):	0.807
Loss Time (sec):	0 (Y+R=4.0 sec)	Average Delay (sec/veh):	xxxxxx
Optimal Cycle:	118	Level Of Service:	D

Street Name:	Newport Boulevard						17th Street					
Approach:	North Bound			South Bound			East Bound			West Bound		
Movement:	L - T - R			L - T - R			L - T - R			L - T - R		
Control:	Protected			Protected			Protected			Protected		
Rights:	Include			Include			Include			Include		
Min. Green:	0	0	0	0	0	0	0	0	0	0	0	0
Lanes:	1 0 3 1 0			2 0 3 0 1			3 0 1 1 0			2 0 3 0 1		
Volume Module:												
Base Vol:	63	1820	169	714	2315	347	707	393	22	276	485	201
Growth Adj:	1.00	1.00	1.00	1.00	1.00	1.00	1.00	1.00	1.00	1.00	1.00	1.00
Initial Bse:	63	1820	169	714	2315	347	707	393	22	276	485	201
Added Vol:	0	0	0	0	0	0	0	0	0	0	0	0
PasserByVol:	0	0	0	0	0	0	0	0	0	0	0	0
Initial Fut:	63	1820	169	714	2315	347	707	393	22	276	485	201
User Adj:	1.00	1.00	1.00	1.00	1.00	1.00	1.00	1.00	1.00	1.00	1.00	1.00
PHF Adj:	1.00	1.00	1.00	1.00	1.00	1.00	1.00	1.00	1.00	1.00	1.00	1.00
PHF Volume:	63	1820	169	714	2315	347	707	393	22	276	485	201
Reduct Vol:	0	0	0	0	0	0	0	0	0	0	0	0
Reduced Vol:	63	1820	169	714	2315	347	707	393	22	276	485	201
PCE Adj:	1.00	1.00	1.00	1.00	1.00	1.00	1.00	1.00	1.00	1.00	1.00	1.00
MLF Adj:	1.00	1.00	1.00	1.00	1.00	1.00	1.00	1.00	1.00	1.00	1.00	1.00
FinalVolume:	63	1820	169	714	2315	347	707	393	22	276	485	201
Saturation Flow Module:												
Sat/Lane:	1600	1600	1600	1600	1600	1600	1600	1600	1600	1600	1600	1600
Adjustment:	1.00	1.00	1.00	1.00	1.00	1.00	1.00	1.00	1.00	1.00	1.00	1.00
Lanes:	1.00	3.66	0.34	2.00	3.00	1.00	3.00	1.89	0.11	2.00	3.00	1.00
Final Sat.:	1600	5856	544	3200	4800	1600	4800	3030	170	3200	4800	1600
Capacity Analysis Module:												
Vol/Sat:	0.04	0.31	0.31	0.22	0.48	0.22	0.15	0.13	0.13	0.09	0.10	0.13
Crit Moves:		****		****			****					****

Newport Banning Ranch
Existing Conditions - ICU
PM Peak Hour

Level Of Service Computation Report
ICU 1(Loss as Cycle Length %) Method (Future Volume Alternative)

Intersection #45 Orange Ave/17th St

Cycle (sec):	100	Critical Vol./Cap.(X):	0.608
Loss Time (sec):	0 (Y+R=4.0 sec)	Average Delay (sec/veh):	xxxxxx
Optimal Cycle:	58	Level Of Service:	B

Street Name:	Orange Avenue						17th Street					
Approach:	North Bound			South Bound			East Bound			West Bound		
Movement:	L - T - R			L - T - R			L - T - R			L - T - R		
Control:	Prot+Permit			Prot+Permit			Prot+Permit			Prot+Permit		
Rights:	Include			Include			Include			Include		
Min. Green:	0	0	0	0	0	0	0	0	0	0	0	0
Lanes:	1 0	1 1	0	1 0	1 0	1	1 0	2 0	1	1 0	2 0	1
Volume Module:												
Base Vol:	168	276	68	214	204	121	140	910	157	83	895	198
Growth Adj:	1.00	1.00	1.00	1.00	1.00	1.00	1.00	1.00	1.00	1.00	1.00	1.00
Initial Bse:	168	276	68	214	204	121	140	910	157	83	895	198
Added Vol:	0	0	0	0	0	0	0	0	0	0	0	0
PasserByVol:	0	0	0	0	0	0	0	0	0	0	0	0
Initial Fut:	168	276	68	214	204	121	140	910	157	83	895	198
User Adj:	1.00	1.00	1.00	1.00	1.00	1.00	1.00	1.00	1.00	1.00	1.00	1.00
PHF Adj:	1.00	1.00	1.00	1.00	1.00	1.00	1.00	1.00	1.00	1.00	1.00	1.00
PHF Volume:	168	276	68	214	204	121	140	910	157	83	895	198
Reduct Vol:	0	0	0	0	0	0	0	0	0	0	0	0
Reduced Vol:	168	276	68	214	204	121	140	910	157	83	895	198
PCE Adj:	1.00	1.00	1.00	1.00	1.00	1.00	1.00	1.00	1.00	1.00	1.00	1.00
MLF Adj:	1.00	1.00	1.00	1.00	1.00	1.00	1.00	1.00	1.00	1.00	1.00	1.00
FinalVolume:	168	276	68	214	204	121	140	910	157	83	895	198
Saturation Flow Module:												
Sat/Lane:	1600	1600	1600	1600	1600	1600	1600	1600	1600	1600	1600	1600
Adjustment:	1.00	1.00	1.00	1.00	1.00	1.00	1.00	1.00	1.00	1.00	1.00	1.00
Lanes:	1.00	1.60	0.40	1.00	1.00	1.00	1.00	2.00	1.00	1.00	2.00	1.00
Final Sat.:	1600	2567	633	1600	1600	1600	1600	3200	1600	1600	3200	1600
Capacity Analysis Module:												
Vol/Sat:	0.11	0.11	0.11	0.13	0.13	0.08	0.09	0.28	0.10	0.05	0.28	0.12
Crit Moves:		****		****			****				****	

Newport Banning Ranch
Existing Conditions - ICU
PM Peak Hour

Level Of Service Computation Report
ICU 1(Loss as Cycle Length %) Method (Future Volume Alternative)

Intersection #46 Santa Ana Ave/17th St

Cycle (sec):	100	Critical Vol./Cap.(X):	0.600
Loss Time (sec):	0 (Y+R=4.0 sec)	Average Delay (sec/veh):	xxxxxx
Optimal Cycle:	47	Level Of Service:	B

Street Name:	Santa Ana Avenue						17th Street					
Approach:	North Bound			South Bound			East Bound			West Bound		
Movement:	L - T - R			L - T - R			L - T - R			L - T - R		
Control:	Permitted			Permitted			Prot+Permit			Prot+Permit		
Rights:	Include			Include			Include			Include		
Min. Green:	0	0	0	0	0	0	0	0	0	0	0	0
Lanes:	1 0	1 0	1	1 0	1 0	1	1 0	2 0	1	1 0	2 0	1
Volume Module:												
Base Vol:	126	173	94	115	170	88	96	937	69	147	1137	130
Growth Adj:	1.00	1.00	1.00	1.00	1.00	1.00	1.00	1.00	1.00	1.00	1.00	1.00
Initial Bse:	126	173	94	115	170	88	96	937	69	147	1137	130
Added Vol:	0	0	0	0	0	0	0	0	0	0	0	0
PasserByVol:	0	0	0	0	0	0	0	0	0	0	0	0
Initial Fut:	126	173	94	115	170	88	96	937	69	147	1137	130
User Adj:	1.00	1.00	1.00	1.00	1.00	1.00	1.00	1.00	1.00	1.00	1.00	1.00
PHF Adj:	1.00	1.00	1.00	1.00	1.00	1.00	1.00	1.00	1.00	1.00	1.00	1.00
PHF Volume:	126	173	94	115	170	88	96	937	69	147	1137	130
Reduct Vol:	0	0	0	0	0	0	0	0	0	0	0	0
Reduced Vol:	126	173	94	115	170	88	96	937	69	147	1137	130
PCE Adj:	1.00	1.00	1.00	1.00	1.00	1.00	1.00	1.00	1.00	1.00	1.00	1.00
MLF Adj:	1.00	1.00	1.00	1.00	1.00	1.00	1.00	1.00	1.00	1.00	1.00	1.00
FinalVolume:	126	173	94	115	170	88	96	937	69	147	1137	130
Saturation Flow Module:												
Sat/Lane:	1600	1600	1600	1600	1600	1600	1600	1600	1600	1600	1600	1600
Adjustment:	1.00	1.00	1.00	1.00	1.00	1.00	1.00	1.00	1.00	1.00	1.00	1.00
Lanes:	1.00	1.00	1.00	1.00	1.00	1.00	1.00	2.00	1.00	1.00	2.00	1.00
Final Sat.:	1600	1600	1600	1600	1600	1600	1600	3200	1600	1600	3200	1600
Capacity Analysis Module:												
Vol/Sat:	0.08	0.11	0.06	0.07	0.11	0.06	0.06	0.29	0.04	0.09	0.36	0.08
Crit Moves:	****				****		****				****	

Newport Banning Ranch
Existing Conditions - ICU
PM Peak Hour

Level Of Service Computation Report
ICU 1(Loss as Cycle Length %) Method (Future Volume Alternative)

Intersection #47 Tustin Ave/17th St

Cycle (sec):	100	Critical Vol./Cap.(X):	0.641
Loss Time (sec):	0 (Y+R=4.0 sec)	Average Delay (sec/veh):	xxxxxx
Optimal Cycle:	52	Level Of Service:	B

Street Name:	Tustin Avenue						17th Street					
Approach:	North Bound			South Bound			East Bound			West Bound		
Movement:	L - T - R			L - T - R			L - T - R			L - T - R		
Control:	Permitted			Permitted			Prot+Permit			Prot+Permit		
Rights:	Include			Include			Include			Include		
Min. Green:	0	0	0	0	0	0	0	0	0	0	0	0
Lanes:	1 0	0 1	0	1 0	1 0	1	1 0	1 1	0	1 0	1 1	0
Volume Module:												
Base Vol:	124	157	83	77	111	56	46	996	62	76	1243	82
Growth Adj:	1.00	1.00	1.00	1.00	1.00	1.00	1.00	1.00	1.00	1.00	1.00	1.00
Initial Bse:	124	157	83	77	111	56	46	996	62	76	1243	82
Added Vol:	0	0	0	0	0	0	0	0	0	0	0	0
PasserByVol:	0	0	0	0	0	0	0	0	0	0	0	0
Initial Fut:	124	157	83	77	111	56	46	996	62	76	1243	82
User Adj:	1.00	1.00	1.00	1.00	1.00	1.00	1.00	1.00	1.00	1.00	1.00	1.00
PHF Adj:	1.00	1.00	1.00	1.00	1.00	1.00	1.00	1.00	1.00	1.00	1.00	1.00
PHF Volume:	124	157	83	77	111	56	46	996	62	76	1243	82
Reduct Vol:	0	0	0	0	0	0	0	0	0	0	0	0
Reduced Vol:	124	157	83	77	111	56	46	996	62	76	1243	82
PCE Adj:	1.00	1.00	1.00	1.00	1.00	1.00	1.00	1.00	1.00	1.00	1.00	1.00
MLF Adj:	1.00	1.00	1.00	1.00	1.00	1.00	1.00	1.00	1.00	1.00	1.00	1.00
FinalVolume:	124	157	83	77	111	56	46	996	62	76	1243	82
Saturation Flow Module:												
Sat/Lane:	1600	1600	1600	1600	1600	1600	1600	1600	1600	1600	1600	1600
Adjustment:	1.00	1.00	1.00	1.00	1.00	1.00	1.00	1.00	1.00	1.00	1.00	1.00
Lanes:	1.00	0.65	0.35	1.00	1.00	1.00	1.00	1.88	0.12	1.00	1.88	0.12
Final Sat.:	1600	1047	553	1600	1600	1600	1600	3012	188	1600	3002	198
Capacity Analysis Module:												
Vol/Sat:	0.08	0.15	0.15	0.05	0.07	0.04	0.03	0.33	0.33	0.05	0.41	0.41
Crit Moves:		****		****			****				****	

Newport Banning Ranch
Existing Conditions - ICU
PM Peak Hour

Level Of Service Computation Report
ICU 1(Loss as Cycle Length %) Method (Future Volume Alternative)

Intersection #48 Irvine Ave/17th St

Cycle (sec):	100	Critical Vol./Cap.(X):	0.629
Loss Time (sec):	0 (Y+R=4.0 sec)	Average Delay (sec/veh):	xxxxxx
Optimal Cycle:	61	Level Of Service:	B

Street Name:	Irvine Avenue						17th Street					
Approach:	North Bound			South Bound			East Bound			West Bound		
Movement:	L - T - R			L - T - R			L - T - R			L - T - R		
Control:	Protected			Protected			Protected			Protected		
Rights:	Include			Include			Include			Include		
Min. Green:	0	0	0	0	0	0	0	0	0	0	0	0
Lanes:	2 0	2 0	1	2 0	2 0	1	2 0	1 1	0	1 0	1 1	0
Volume Module:												
Base Vol:	373	623	49	168	528	334	233	570	200	101	646	61
Growth Adj:	1.00	1.00	1.00	1.00	1.00	1.00	1.00	1.00	1.00	1.00	1.00	1.00
Initial Bse:	373	623	49	168	528	334	233	570	200	101	646	61
Added Vol:	0	0	0	0	0	0	0	0	0	0	0	0
PasserByVol:	0	0	0	0	0	0	0	0	0	0	0	0
Initial Fut:	373	623	49	168	528	334	233	570	200	101	646	61
User Adj:	1.00	1.00	1.00	1.00	1.00	1.00	1.00	1.00	1.00	1.00	1.00	1.00
PHF Adj:	1.00	1.00	1.00	1.00	1.00	1.00	1.00	1.00	1.00	1.00	1.00	1.00
PHF Volume:	373	623	49	168	528	334	233	570	200	101	646	61
Reduct Vol:	0	0	0	0	0	0	0	0	0	0	0	0
Reduced Vol:	373	623	49	168	528	334	233	570	200	101	646	61
PCE Adj:	1.00	1.00	1.00	1.00	1.00	1.00	1.00	1.00	1.00	1.00	1.00	1.00
MLF Adj:	1.00	1.00	1.00	1.00	1.00	1.00	1.00	1.00	1.00	1.00	1.00	1.00
FinalVolume:	373	623	49	168	528	334	233	570	200	101	646	61
Saturation Flow Module:												
Sat/Lane:	1600	1600	1600	1600	1600	1600	1600	1600	1600	1600	1600	1600
Adjustment:	1.00	1.00	1.00	1.00	1.00	1.00	1.00	1.00	1.00	1.00	1.00	1.00
Lanes:	2.00	2.00	1.00	2.00	2.00	1.00	2.00	1.48	0.52	1.00	1.83	0.17
Final Sat.:	3200	3200	1600	3200	3200	1600	3200	2369	831	1600	2924	276
Capacity Analysis Module:												
Vol/Sat:	0.12	0.19	0.03	0.05	0.17	0.21	0.07	0.24	0.24	0.06	0.22	0.22
Crit Moves:	****					****		****		****		

Newport Banning Ranch
Existing Conditions - ICU
PM Peak Hour

Level Of Service Computation Report
ICU 1(Loss as Cycle Length %) Method (Future Volume Alternative)

Intersection #49 Placentia Ave/16th St

Cycle (sec):	100	Critical Vol./Cap.(X):	0.294
Loss Time (sec):	0 (Y+R=4.0 sec)	Average Delay (sec/veh):	xxxxxx
Optimal Cycle:	20	Level Of Service:	A

Street Name:	Placentia Avenue						16th Street					
Approach:	North Bound			South Bound			East Bound			West Bound		
Movement:	L - T - R			L - T - R			L - T - R			L - T - R		
Control:	Permitted			Permitted			Permitted			Permitted		
Rights:	Include			Include			Include			Include		
Min. Green:	0	0	0	0	0	0	0	0	0	0	0	0
Lanes:	1 0	1 1	0	1 0	1 1	0	1 0	0 1	0	1 0	0 1	0
Volume Module:												
Base Vol:	34	530	22	21	381	20	64	42	59	21	28	82
Growth Adj:	1.00	1.00	1.00	1.00	1.00	1.00	1.00	1.00	1.00	1.00	1.00	1.00
Initial Bse:	34	530	22	21	381	20	64	42	59	21	28	82
Added Vol:	0	0	0	0	0	0	0	0	0	0	0	0
PasserByVol:	0	0	0	0	0	0	0	0	0	0	0	0
Initial Fut:	34	530	22	21	381	20	64	42	59	21	28	82
User Adj:	1.00	1.00	1.00	1.00	1.00	1.00	1.00	1.00	1.00	1.00	1.00	1.00
PHF Adj:	1.00	1.00	1.00	1.00	1.00	1.00	1.00	1.00	1.00	1.00	1.00	1.00
PHF Volume:	34	530	22	21	381	20	64	42	59	21	28	82
Reduct Vol:	0	0	0	0	0	0	0	0	0	0	0	0
Reduced Vol:	34	530	22	21	381	20	64	42	59	21	28	82
PCE Adj:	1.00	1.00	1.00	1.00	1.00	1.00	1.00	1.00	1.00	1.00	1.00	1.00
MLF Adj:	1.00	1.00	1.00	1.00	1.00	1.00	1.00	1.00	1.00	1.00	1.00	1.00
FinalVolume:	34	530	22	21	381	20	64	42	59	21	28	82
Saturation Flow Module:												
Sat/Lane:	1600	1600	1600	1600	1600	1600	1600	1600	1600	1600	1600	1600
Adjustment:	1.00	1.00	1.00	1.00	1.00	1.00	1.00	1.00	1.00	1.00	1.00	1.00
Lanes:	1.00	1.92	0.08	1.00	1.90	0.10	1.00	0.42	0.58	1.00	0.25	0.75
Final Sat.:	1600	3072	128	1600	3040	160	1600	665	935	1600	407	1193
Capacity Analysis Module:												
Vol/Sat:	0.02	0.17	0.17	0.01	0.13	0.13	0.04	0.06	0.06	0.01	0.07	0.07
Crit Moves:		****			****			****			****	

Newport Banning Ranch
Existing Conditions - ICU
PM Peak Hour

Level Of Service Computation Report
ICU 1(Loss as Cycle Length %) Method (Future Volume Alternative)

Intersection #50 Superior Ave/16th St

Cycle (sec):	100	Critical Vol./Cap.(X):	0.381
Loss Time (sec):	0 (Y+R=4.0 sec)	Average Delay (sec/veh):	xxxxxx
Optimal Cycle:	23	Level Of Service:	A

Street Name:	Superior Avenue						16th Street					
Approach:	North Bound			South Bound			East Bound			West Bound		
Movement:	L - T - R			L - T - R			L - T - R			L - T - R		
Control:	Permitted			Permitted			Permitted			Permitted		
Rights:	Include			Include			Include			Include		
Min. Green:	0	0	0	0	0	0	0	0	0	0	0	0
Lanes:	1 0	2 0	1	1 0	1 1	0	1 0	1 0	0	0 1	0 0	1
Volume Module:												
Base Vol:	23	699	23	25	864	43	30	94	0	16	87	14
Growth Adj:	1.00	1.00	1.00	1.00	1.00	1.00	1.00	1.00	1.00	1.00	1.00	1.00
Initial Bse:	23	699	23	25	864	43	30	94	0	16	87	14
Added Vol:	0	0	0	0	0	0	0	0	0	0	0	0
PasserByVol:	0	0	0	0	0	0	0	0	0	0	0	0
Initial Fut:	23	699	23	25	864	43	30	94	0	16	87	14
User Adj:	1.00	1.00	1.00	1.00	1.00	1.00	1.00	1.00	1.00	1.00	1.00	1.00
PHF Adj:	1.00	1.00	1.00	1.00	1.00	1.00	1.00	1.00	1.00	1.00	1.00	1.00
PHF Volume:	23	699	23	25	864	43	30	94	0	16	87	14
Reduct Vol:	0	0	0	0	0	0	0	0	0	0	0	0
Reduced Vol:	23	699	23	25	864	43	30	94	0	16	87	14
PCE Adj:	1.00	1.00	1.00	1.00	1.00	1.00	1.00	1.00	1.00	1.00	1.00	1.00
MLF Adj:	1.00	1.00	1.00	1.00	1.00	1.00	1.00	1.00	1.00	1.00	1.00	1.00
FinalVolume:	23	699	23	25	864	43	30	94	0	16	87	14
Saturation Flow Module:												
Sat/Lane:	1600	1600	1600	1600	1600	1600	1600	1600	1600	1600	1600	1600
Adjustment:	1.00	1.00	1.00	1.00	1.00	1.00	1.00	1.00	1.00	1.00	1.00	1.00
Lanes:	1.00	2.00	1.00	1.00	1.91	0.09	1.00	1.00	0.00	0.16	0.84	1.00
Final Sat.:	1600	3200	1600	1600	3048	152	1600	1600	0	249	1351	1600
Capacity Analysis Module:												
Vol/Sat:	0.01	0.22	0.01	0.02	0.28	0.28	0.02	0.06	0.00	0.01	0.06	0.01
Crit Moves:	****				****		****				****	

Newport Banning Ranch
Existing Conditions - ICU
PM Peak Hour

Level Of Service Computation Report
ICU 1(Loss as Cycle Length %) Method (Future Volume Alternative)

Intersection #51 Newport Blvd/16th St

Cycle (sec):	120	Critical Vol./Cap.(X):	0.542
Loss Time (sec):	0 (Y+R=4.0 sec)	Average Delay (sec/veh):	xxxxxx
Optimal Cycle:	41	Level Of Service:	A

Street Name:	Newport Boulevard						16th Street					
Approach:	North Bound			South Bound			East Bound			West Bound		
Movement:	L - T - R			L - T - R			L - T - R			L - T - R		
Control:	Protected			Protected			Permitted			Permitted		
Rights:	Include			Include			Include			Include		
Min. Green:	0	0	0	0	0	0	0	0	0	0	0	0
Lanes:	1 0 2	1 0		1 0 3	0 1		0 0 1!	0 0		0 0 1!	0 0	
Volume Module:												
Base Vol:	20	1402	50	85	2084	29	36	48	21	20	37	59
Growth Adj:	1.00	1.00	1.00	1.00	1.00	1.00	1.00	1.00	1.00	1.00	1.00	1.00
Initial Bse:	20	1402	50	85	2084	29	36	48	21	20	37	59
Added Vol:	0	0	0	0	0	0	0	0	0	0	0	0
PasserByVol:	0	0	0	0	0	0	0	0	0	0	0	0
Initial Fut:	20	1402	50	85	2084	29	36	48	21	20	37	59
User Adj:	1.00	1.00	1.00	1.00	1.00	1.00	1.00	1.00	1.00	1.00	1.00	1.00
PHF Adj:	1.00	1.00	1.00	1.00	1.00	1.00	1.00	1.00	1.00	1.00	1.00	1.00
PHF Volume:	20	1402	50	85	2084	29	36	48	21	20	37	59
Reduct Vol:	0	0	0	0	0	0	0	0	0	0	0	0
Reduced Vol:	20	1402	50	85	2084	29	36	48	21	20	37	59
PCE Adj:	1.00	1.00	1.00	1.00	1.00	1.00	1.00	1.00	1.00	1.00	1.00	1.00
MLF Adj:	1.00	1.00	1.00	1.00	1.00	1.00	1.00	1.00	1.00	1.00	1.00	1.00
FinalVolume:	20	1402	50	85	2084	29	36	48	21	20	37	59
Saturation Flow Module:												
Sat/Lane:	1600	1600	1600	1600	1600	1600	1600	1600	1600	1600	1600	1600
Adjustment:	1.00	1.00	1.00	1.00	1.00	1.00	1.00	1.00	1.00	1.00	1.00	1.00
Lanes:	1.00	2.90	0.10	1.00	3.00	1.00	0.34	0.46	0.20	0.17	0.32	0.51
Final Sat.:	1600	4635	165	1600	4800	1600	549	731	320	276	510	814
Capacity Analysis Module:												
Vol/Sat:	0.01	0.30	0.30	0.05	0.43	0.02	0.02	0.07	0.07	0.01	0.07	0.07
Crit Moves:	****				****		****				****	

Newport Banning Ranch
Existing Conditions - ICU
PM Peak Hour

Level Of Service Computation Report
ICU 1(Loss as Cycle Length %) Method (Future Volume Alternative)

Intersection #52 Bluff Rd/Victoria St

Cycle (sec):	100	Critical Vol./Cap.(X):	0.534
Loss Time (sec):	0 (Y+R=4.0 sec)	Average Delay (sec/veh):	xxxxxx
Optimal Cycle:	49	Level Of Service:	A

Street Name:	Bluff Road									Victoria St					
Approach:	North Bound			South Bound			East Bound			West Bound					
Movement:	L	- T	- R	L	- T	- R	L	- T	- R	L	- T	- R			
Control:	Protected			Protected			Protected			Protected					
Rights:	Include			Include			Include			Include					
Min. Green:	0	0	0	0	0	0	0	0	0	0	0	0			
Lanes:	0 0	0 0	0	0 0	0 0	0	0 0	2 0	0	0 0	2 0	0			
Volume Module:															
Base Vol:	0	0	0	0	0	0	0	942	0	0	1709	0			
Growth Adj:	1.00	1.00	1.00	1.00	1.00	1.00	1.00	1.00	1.00	1.00	1.00	1.00			
Initial Bse:	0	0	0	0	0	0	0	942	0	0	1709	0			
Added Vol:	0	0	0	0	0	0	0	0	0	0	0	0			
PasserByVol:	0	0	0	0	0	0	0	0	0	0	0	0			
Initial Fut:	0	0	0	0	0	0	0	942	0	0	1709	0			
User Adj:	1.00	1.00	1.00	1.00	1.00	1.00	1.00	1.00	1.00	1.00	1.00	1.00			
PHF Adj:	1.00	1.00	1.00	1.00	1.00	1.00	1.00	1.00	1.00	1.00	1.00	1.00			
PHF Volume:	0	0	0	0	0	0	0	942	0	0	1709	0			
Reduct Vol:	0	0	0	0	0	0	0	0	0	0	0	0			
Reduced Vol:	0	0	0	0	0	0	0	942	0	0	1709	0			
PCE Adj:	1.00	1.00	1.00	1.00	1.00	1.00	1.00	1.00	1.00	1.00	1.00	1.00			
MLF Adj:	1.00	1.00	1.00	1.00	1.00	1.00	1.00	1.00	1.00	1.00	1.00	1.00			
FinalVolume:	0	0	0	0	0	0	0	942	0	0	1709	0			
Saturation Flow Module:															
Sat/Lane:	1600	1600	1600	1600	1600	1600	1600	1600	1600	1600	1600	1600			
Adjustment:	1.00	1.00	1.00	1.00	1.00	1.00	1.00	1.00	1.00	1.00	1.00	1.00			
Lanes:	0.00	0.00	0.00	0.00	0.00	0.00	0.00	2.00	0.00	0.00	2.00	0.00			
Final Sat.:	0	0	0	0	0	0	0	3200	0	0	3200	0			
Capacity Analysis Module:															
Vol/Sat:	0.00	0.00	0.00	0.00	0.00	0.00	0.00	0.29	0.00	0.00	0.53	0.00			
Crit Moves:							****				****				

Newport Banning Ranch
Existing Conditions - ICU
PM Peak Hour

Level Of Service Computation Report
2000 HCM Operations Method (Future Volume Alternative)

Intersection #53 Bluff Rd/19th St

Cycle (sec): 100 Critical Vol./Cap.(X): 0.000
Loss Time (sec): 0 (Y+R=4.0 sec) Average Delay (sec/veh): 0.0
Optimal Cycle: 0 Level Of Service:

Street Name:	Bluff Rd						19th Street					
Approach:	North Bound			South Bound			East Bound			West Bound		
Movement:	L - T - R			L - T - R			L - T - R			L - T - R		
Control:	Protected			Protected			Protected			Protected		
Rights:	Include			Include			Include			Include		
Min. Green:	0	0	0	0	0	0	0	0	0	0	0	0
Lanes:	0 0 0 0 0			0 0 0 0 0			0 0 0 0 0			0 0 0 0 0		
Volume Module:												
Base Vol:	0	0	0	0	0	0	0	0	0	0	0	0
Growth Adj:	0.00	0.00	0.00	0.00	0.00	0.00	0.00	0.00	0.00	0.00	0.00	0.00
Initial Bse:	0	0	0	0	0	0	0	0	0	0	0	0
Added Vol:	0	0	0	0	0	0	0	0	0	0	0	0
PasserByVol:	0	0	0	0	0	0	0	0	0	0	0	0
Initial Fut:	0	0	0	0	0	0	0	0	0	0	0	0
User Adj:	0.00	0.00	0.00	0.00	0.00	0.00	0.00	0.00	0.00	0.00	0.00	0.00
PHF Adj:	0.00	0.00	0.00	0.00	0.00	0.00	0.00	0.00	0.00	0.00	0.00	0.00
PHF Volume:	0	0	0	0	0	0	0	0	0	0	0	0
Reduct Vol:	0	0	0	0	0	0	0	0	0	0	0	0
Reduced Vol:	0	0	0	0	0	0	0	0	0	0	0	0
PCE Adj:	0.00	0.00	0.00	0.00	0.00	0.00	0.00	0.00	0.00	0.00	0.00	0.00
MLF Adj:	0.00	0.00	0.00	0.00	0.00	0.00	0.00	0.00	0.00	0.00	0.00	0.00
FinalVolume:	0	0	0	0	0	0	0	0	0	0	0	0
Saturation Flow Module:												
Sat/Lane:	0	0	0	0	0	0	0	0	0	0	0	0
Adjustment:	1.00	1.00	1.00	1.00	1.00	1.00	1.00	1.00	1.00	1.00	1.00	1.00
Lanes:	0.00	0.00	0.00	0.00	0.00	0.00	0.00	0.00	0.00	0.00	0.00	0.00
Final Sat.:	0	0	0	0	0	0	0	0	0	0	0	0
Capacity Analysis Module:												
Vol/Sat:	0.00	0.00	0.00	0.00	0.00	0.00	0.00	0.00	0.00	0.00	0.00	0.00
Crit Moves:												
Green/Cycle:	0.00	0.00	0.00	0.00	0.00	0.00	0.00	0.00	0.00	0.00	0.00	0.00
Volume/Cap:	0.00	0.00	0.00	0.00	0.00	0.00	0.00	0.00	0.00	0.00	0.00	0.00
Delay/Veh:	0.0	0.0	0.0	0.0	0.0	0.0	0.0	0.0	0.0	0.0	0.0	0.0
User DelAdj:	1.00	1.00	1.00	1.00	1.00	1.00	1.00	1.00	1.00	1.00	1.00	1.00
AdjDel/Veh:	0.0	0.0	0.0	0.0	0.0	0.0	0.0	0.0	0.0	0.0	0.0	0.0
LOS by Move:												
HCM2kAvgQ:	0	0	0	0	0	0	0	0	0	0	0	0

Note: Queue reported is the number of cars per lane.

Traffix 7.9.0215 (c) 2008 Dowling Assoc. Licensed to KIMLEY HORN, ORANGE, CA

Newport Banning Ranch
Existing Conditions - ICU
PM Peak Hour

Level Of Service Computation Report
2000 HCM Operations Method (Future Volume Alternative)

Intersection #54 Bluff Rd/17th St

Cycle (sec): 100 Critical Vol./Cap.(X): 0.000
Loss Time (sec): 0 (Y+R=4.0 sec) Average Delay (sec/veh): 0.0
Optimal Cycle: 0 Level Of Service:

Street Name:	Bluff Road						17th Street					
Approach:	North Bound			South Bound			East Bound			West Bound		
Movement:	L -	T -	R	L -	T -	R	L -	T -	R	L -	T -	R
Control:	Protected			Protected			Protected			Protected		
Rights:	Include			Include			Include			Include		
Min. Green:	0	0	0	0	0	0	0	0	0	0	0	0
Lanes:	0 0	0 0	0	0 0	0 0	0	0 0	0 0	0	0 0	0 0	0
Volume Module:												
Base Vol:	0	0	0	0	0	0	0	0	0	0	0	0
Growth Adj:	0.00	0.00	0.00	0.00	0.00	0.00	0.00	0.00	0.00	0.00	0.00	0.00
Initial Bse:	0	0	0	0	0	0	0	0	0	0	0	0
Added Vol:	0	0	0	0	0	0	0	0	0	0	0	0
PasserByVol:	0	0	0	0	0	0	0	0	0	0	0	0
Initial Fut:	0	0	0	0	0	0	0	0	0	0	0	0
User Adj:	0.00	0.00	0.00	0.00	0.00	0.00	0.00	0.00	0.00	0.00	0.00	0.00
PHF Adj:	0.00	0.00	0.00	0.00	0.00	0.00	0.00	0.00	0.00	0.00	0.00	0.00
PHF Volume:	0	0	0	0	0	0	0	0	0	0	0	0
Reduct Vol:	0	0	0	0	0	0	0	0	0	0	0	0
Reduced Vol:	0	0	0	0	0	0	0	0	0	0	0	0
PCE Adj:	0.00	0.00	0.00	0.00	0.00	0.00	0.00	0.00	0.00	0.00	0.00	0.00
MLF Adj:	0.00	0.00	0.00	0.00	0.00	0.00	0.00	0.00	0.00	0.00	0.00	0.00
FinalVolume:	0	0	0	0	0	0	0	0	0	0	0	0
Saturation Flow Module:												
Sat/Lane:	0	0	0	0	0	0	0	0	0	0	0	0
Adjustment:	1.00	1.00	1.00	1.00	1.00	1.00	1.00	1.00	1.00	1.00	1.00	1.00
Lanes:	0.00	0.00	0.00	0.00	0.00	0.00	0.00	0.00	0.00	0.00	0.00	0.00
Final Sat.:	0	0	0	0	0	0	0	0	0	0	0	0
Capacity Analysis Module:												
Vol/Sat:	0.00	0.00	0.00	0.00	0.00	0.00	0.00	0.00	0.00	0.00	0.00	0.00
Crit Moves:												
Green/Cycle:	0.00	0.00	0.00	0.00	0.00	0.00	0.00	0.00	0.00	0.00	0.00	0.00
Volume/Cap:	0.00	0.00	0.00	0.00	0.00	0.00	0.00	0.00	0.00	0.00	0.00	0.00
Delay/Veh:	0.0	0.0	0.0	0.0	0.0	0.0	0.0	0.0	0.0	0.0	0.0	0.0
User DelAdj:	1.00	1.00	1.00	1.00	1.00	1.00	1.00	1.00	1.00	1.00	1.00	1.00
AdjDel/Veh:	0.0	0.0	0.0	0.0	0.0	0.0	0.0	0.0	0.0	0.0	0.0	0.0
LOS by Move:												
HCM2kAvgQ:	0	0	0	0	0	0	0	0	0	0	0	0

Note: Queue reported is the number of cars per lane.

Traffix 7.9.0215 (c) 2008 Dowling Assoc. Licensed to KIMLEY HORN, ORANGE, CA

Newport Banning Ranch
Existing Conditions - ICU
PM Peak Hour

Level Of Service Computation Report
2000 HCM Unsignalized Method (Future Volume Alternative)

Intersection #55 Bluff Rd/16th St

Average Delay (sec/veh): 0.0 Worst Case Level Of Service: [0.0]

Street Name:	Bluff Road									16th Street								
Approach:	North Bound					South Bound				East Bound					West Bound			
Movement:	L	-	T	-	R	L	-	T	-	R	L	-	T	-	R	L	-	T	-	R
Control:	Uncontrolled					Uncontrolled					Stop Sign					Stop Sign				
Rights:	Include					Include					Include					Include				
Lanes:	0	0	0	0	0	0	0	0	0	0	0	0	0	0	0	0	0	0	0	0
Volume Module:																				
Base Vol:	0	0	0	0	0	0	0	0	0	0	0	0	0	0	0	0	0	0	0	0
Growth Adj:	0.00	0.00	0.00	0.00	0.00	0.00	0.00	0.00	0.00	0.00	0.00	0.00	0.00	0.00	0.00	0.00	0.00	0.00	0.00	0.00
Initial Bse:	0	0	0	0	0	0	0	0	0	0	0	0	0	0	0	0	0	0	0	0
Added Vol:	0	0	0	0	0	0	0	0	0	0	0	0	0	0	0	0	0	0	0	0
PasserByVol:	0	0	0	0	0	0	0	0	0	0	0	0	0	0	0	0	0	0	0	0
Initial Fut:	0	0	0	0	0	0	0	0	0	0	0	0	0	0	0	0	0	0	0	0
User Adj:	0.00	0.00	0.00	0.00	0.00	0.00	0.00	0.00	0.00	0.00	0.00	0.00	0.00	0.00	0.00	0.00	0.00	0.00	0.00	0.00
PHF Adj:	0.00	0.00	0.00	0.00	0.00	0.00	0.00	0.00	0.00	0.00	0.00	0.00	0.00	0.00	0.00	0.00	0.00	0.00	0.00	0.00
PHF Volume:	0	0	0	0	0	0	0	0	0	0	0	0	0	0	0	0	0	0	0	0
Reduct Vol:	0	0	0	0	0	0	0	0	0	0	0	0	0	0	0	0	0	0	0	0
FinalVolume:	0	0	0	0	0	0	0	0	0	0	0	0	0	0	0	0	0	0	0	0
Critical Gap Module:																				
Critical Gp:	0.0	0.0	0.0	0.0	0.0	0.0	0.0	0.0	0.0	0.0	0.0	0.0	0.0	0.0	0.0	0.0	0.0	0.0	0.0	0.0
FollowUpTim:	0.0	0.0	0.0	0.0	0.0	0.0	0.0	0.0	0.0	0.0	0.0	0.0	0.0	0.0	0.0	0.0	0.0	0.0	0.0	0.0
Capacity Module:																				
Cnflict Vol:	0	0	0	0	0	0	0	0	0	0	0	0	0	0	0	0	0	0	0	0
Potent Cap.:	0	0	0	0	0	0	0	0	0	0	0	0	0	0	0	0	0	0	0	0
Move Cap.:	1	1	1	1	1	1	1	1	1	1	1	1	1	1	1	1	1	1	1	1
Volume/Cap:	0.00	0.00	0.00	0.00	0.00	0.00	0.00	0.00	0.00	0.00	0.00	0.00	0.00	0.00	0.00	0.00	0.00	0.00	0.00	0.00
Level Of Service Module:																				
2Way95thQ:	0.0	0.0	0.0	0.0	0.0	0.0	0.0	0.0	0.0	0.0	0.0	0.0	0.0	0.0	0.0	0.0	0.0	0.0	0.0	0.0
Control Del:	0.0	0.0	0.0	0.0	0.0	0.0	0.0	0.0	0.0	0.0	0.0	0.0	0.0	0.0	0.0	0.0	0.0	0.0	0.0	0.0
LOS by Move:																				
Movement:	LT	-	LTR	-	RT	LT	-	LTR	-	RT	LT	-	LTR	-	RT	LT	-	LTR	-	RT
Shared Cap.:	0	0	0	0	0	0	0	0	0	0	0	0	0	0	0	0	0	0	0	0
SharedQueue:	0.0	0.0	0.0	0.0	0.0	0.0	0.0	0.0	0.0	0.0	0.0	0.0	0.0	0.0	0.0	0.0	0.0	0.0	0.0	0.0
Shrd ConDel:	1.0	1.0	1.0	1.0	1.0	1.0	1.0	1.0	1.0	1.0	1.0	1.0	1.0	1.0	1.0	1.0	1.0	1.0	1.0	1.0
Shared LOS:																				
ApproachDel:	0.0					0.0					0.0					0.0				
ApproachLOS:																				

Note: Queue reported is the number of cars per lane.

Newport Banning Ranch
Existing Conditions - ICU
PM Peak Hour

Level Of Service Computation Report
ICU 1(Loss as Cycle Length %) Method (Future Volume Alternative)

Intersection #56 Bluff Rd/15th St

Cycle (sec):	100	Critical Vol./Cap.(X):	0.000
Loss Time (sec):	0 (Y+R=4.0 sec)	Average Delay (sec/veh):	xxxxxx
Optimal Cycle:	0	Level Of Service:	

Street Name:	Bluff Road					15th Street					
Approach:	North Bound			South Bound			East Bound			West Bound		
Movement:	L -	T -	R	L -	T -	R	L -	T -	R	L -	T -	R
Control:	Protected			Protected			Protected			Protected		
Rights:	Include			Include			Include			Include		
Min. Green:	0	0	0	0	0	0	0	0	0	0	0	0
Lanes:	0 0	0 0	0	0 0	0 0	0	0 0	0 0	0	0 0	0 0	0
Volume Module:												
Base Vol:	0	0	0	0	0	0	0	0	0	0	0	0
Growth Adj:	0.00	0.00	0.00	0.00	0.00	0.00	0.00	0.00	0.00	0.00	0.00	0.00
Initial Bse:	0	0	0	0	0	0	0	0	0	0	0	0
Added Vol:	0	0	0	0	0	0	0	0	0	0	0	0
PasserByVol:	0	0	0	0	0	0	0	0	0	0	0	0
Initial Fut:	0	0	0	0	0	0	0	0	0	0	0	0
User Adj:	0.00	0.00	0.00	0.00	0.00	0.00	0.00	0.00	0.00	0.00	0.00	0.00
PHF Adj:	0.00	0.00	0.00	0.00	0.00	0.00	0.00	0.00	0.00	0.00	0.00	0.00
PHF Volume:	0	0	0	0	0	0	0	0	0	0	0	0
Reduct Vol:	0	0	0	0	0	0	0	0	0	0	0	0
Reduced Vol:	0	0	0	0	0	0	0	0	0	0	0	0
PCE Adj:	0.00	0.00	0.00	0.00	0.00	0.00	0.00	0.00	0.00	0.00	0.00	0.00
MLF Adj:	0.00	0.00	0.00	0.00	0.00	0.00	0.00	0.00	0.00	0.00	0.00	0.00
FinalVolume:	0	0	0	0	0	0	0	0	0	0	0	0
Saturation Flow Module:												
Sat/Lane:	0	0	0	0	0	0	0	0	0	0	0	0
Adjustment:	1.00	1.00	1.00	1.00	1.00	1.00	1.00	1.00	1.00	1.00	1.00	1.00
Lanes:	0.00	0.00	0.00	0.00	0.00	0.00	0.00	0.00	0.00	0.00	0.00	0.00
Final Sat.:	0	0	0	0	0	0	0	0	0	0	0	0
Capacity Analysis Module:												
Vol/Sat:	0.00	0.00	0.00	0.00	0.00	0.00	0.00	0.00	0.00	0.00	0.00	0.00
Crit Moves:												

Newport Banning Ranch
Existing Conditions - ICU
PM Peak Hour

Level Of Service Computation Report
ICU 1(Loss as Cycle Length %) Method (Future Volume Alternative)

Intersection #57 Bluff Rd/W. Coast Hwy

Cycle (sec):	120	Critical Vol./Cap.(X):	0.587
Loss Time (sec):	0 (Y+R=4.0 sec)	Average Delay (sec/veh):	xxxxxx
Optimal Cycle:	55	Level Of Service:	A

Street Name:	Bluff Road									W. Coast Highway							
Approach:	North Bound			South Bound			East Bound			West Bound		
Movement:	L	- T	- R	L	- T	- R	L	- T	- R	L	- T	- R
Control:	Protected			Protected			Protected			Protected		
Rights:	Include			Include			Include			Include		
Min. Green:	0	0	0	0	0	0	0	0	0	0	0	0
Lanes:	0 0	0 0	0	0 0	0 0	0	0 0	3 0	0	0 0	3 0	0
Volume Module:												
Base Vol:	0	0	0	0	0	0	0	1487	0	0	2818	0
Growth Adj:	1.00	1.00	1.00	1.00	1.00	1.00	1.00	1.00	1.00	1.00	1.00	1.00
Initial Bse:	0	0	0	0	0	0	0	1487	0	0	2818	0
Added Vol:	0	0	0	0	0	0	0	0	0	0	0	0
PasserByVol:	0	0	0	0	0	0	0	0	0	0	0	0
Initial Fut:	0	0	0	0	0	0	0	1487	0	0	2818	0
User Adj:	1.00	1.00	1.00	1.00	1.00	1.00	1.00	1.00	1.00	1.00	1.00	1.00
PHF Adj:	1.00	1.00	1.00	1.00	1.00	1.00	1.00	1.00	1.00	1.00	1.00	1.00
PHF Volume:	0	0	0	0	0	0	0	1487	0	0	2818	0
Reduct Vol:	0	0	0	0	0	0	0	0	0	0	0	0
Reduced Vol:	0	0	0	0	0	0	0	1487	0	0	2818	0
PCE Adj:	1.00	1.00	1.00	1.00	1.00	1.00	1.00	1.00	1.00	1.00	1.00	1.00
MLF Adj:	1.00	1.00	1.00	1.00	1.00	1.00	1.00	1.00	1.00	1.00	1.00	1.00
FinalVolume:	0	0	0	0	0	0	0	1487	0	0	2818	0
Saturation Flow Module:												
Sat/Lane:	1600	1600	1600	1600	1600	1600	1600	1600	1600	1600	1600	1600
Adjustment:	1.00	1.00	1.00	1.00	1.00	1.00	1.00	1.00	1.00	1.00	1.00	1.00
Lanes:	0.00	0.00	0.00	0.00	0.00	0.00	0.00	3.00	0.00	0.00	3.00	0.00
Final Sat.:	0	0	0	0	0	0	0	4800	0	0	4800	0
Capacity Analysis Module:												
Vol/Sat:	0.00	0.00	0.00	0.00	0.00	0.00	0.00	0.31	0.00	0.00	0.59	0.00
Crit Moves:							****				****	

Newport Banning Ranch
Existing Conditions - ICU
PM Peak Hour

Level Of Service Computation Report
2000 HCM 4-Way Stop Method (Future Volume Alternative)

****

Intersection #58 Monrovia Ave/15th Street

****

Cycle (sec): 100 Critical Vol./Cap.(X): 0.117
Loss Time (sec): 0 (Y+R=4.0 sec) Average Delay (sec/veh): 7.4
Optimal Cycle: 0 Level Of Service: A

****

Street Name:	Monrovia Ave						15th Street					
Approach:	North Bound			South Bound			East Bound			West Bound		
Movement:	L - T - R			L - T - R			L - T - R			L - T - R		
Control:	Stop Sign			Stop Sign			Stop Sign			Stop Sign		
Rights:	Include			Include			Include			Include		
Min. Green:	0	0	0	0	0	0	0	0	0	0	0	0
Lanes:	0 0 0 1 0			0 0 1! 0 0			0 1 0 0 0			0 0 1! 0 0		
Volume Module: >> Count Date: 4 May 2011 << PM Peak Hour												
Base Vol:	0	5	17	92	5	1	9	7	0	11	2	42
Growth Adj:	1.00	1.00	1.00	1.00	1.00	1.00	1.00	1.00	1.00	1.00	1.00	1.00
Initial Bse:	0	5	17	92	5	1	9	7	0	11	2	42
Added Vol:	0	0	0	0	0	0	0	0	0	0	0	0
PasserByVol:	0	0	0	0	0	0	0	0	0	0	0	0
Initial Fut:	0	5	17	92	5	1	9	7	0	11	2	42
User Adj:	1.00	1.00	1.00	1.00	1.00	1.00	1.00	1.00	1.00	1.00	1.00	1.00
PHF Adj:	1.00	1.00	1.00	1.00	1.00	1.00	1.00	1.00	1.00	1.00	1.00	1.00
PHF Volume:	0	5	17	92	5	1	9	7	0	11	2	42
Reduct Vol:	0	0	0	0	0	0	0	0	0	0	0	0
Reduced Vol:	0	5	17	92	5	1	9	7	0	11	2	42
PCE Adj:	1.00	1.00	1.00	1.00	1.00	1.00	1.00	1.00	1.00	1.00	1.00	1.00
MLF Adj:	1.00	1.00	1.00	1.00	1.00	1.00	1.00	1.00	1.00	1.00	1.00	1.00
FinalVolume:	0	5	17	92	5	1	9	7	0	11	2	42
Saturation Flow Module:												
Adjustment:	1.00	1.00	1.00	1.00	1.00	1.00	1.00	1.00	1.00	1.00	1.00	1.00
Lanes:	0.00	0.23	0.77	0.94	0.05	0.01	0.56	0.44	0.00	0.20	0.04	0.76
Final Sat.:	0	218	740	786	43	9	456	355	0	186	34	711
Capacity Analysis Module:												
Vol/Sat:	xxxx	0.02	0.02	0.12	0.12	0.12	0.02	0.02	xxxx	0.06	0.06	0.06
Crit Moves:			****		****			****		****		
Delay/Veh:	0.0	6.8	6.8	7.8	7.8	7.8	7.4	7.4	0.0	7.0	7.0	7.0
Delay Adj:	1.00	1.00	1.00	1.00	1.00	1.00	1.00	1.00	1.00	1.00	1.00	1.00
AdjDel/Veh:	0.0	6.8	6.8	7.8	7.8	7.8	7.4	7.4	0.0	7.0	7.0	7.0
LOS by Move:	*	A	A	A	A	A	A	A	*	A	A	A
ApproachDel:	6.8			7.8			7.4			7.0		
Delay Adj:	1.00			1.00			1.00			1.00		
ApprAdjDel:	6.8			7.8			7.4			7.0		
LOS by Appr:	A			A			A			A		
AllWayAvgQ:	0.0	0.0	0.0	0.1	0.1	0.1	0.0	0.0	0.0	0.1	0.1	0.1

****

Traffix 7.9.0215 (c) 2008 Dowling Assoc. Licensed to KIMLEY HORN, ORANGE, CA

Newport Banning Ranch
Existing Conditions - ICU
PM Peak Hour

Note: Queue reported is the number of cars per lane.

Newport Banning Ranch
Existing Conditions - ICU
PM Peak Hour

Level Of Service Computation Report
ICU 1(Loss as Cycle Length %) Method (Future Volume Alternative)

Intersection #100 Pomona Ave/16th St

Cycle (sec):	100	Critical Vol./Cap.(X):	0.044
Loss Time (sec):	0 (Y+R=4.0 sec)	Average Delay (sec/veh):	xxxxxx
Optimal Cycle:	15	Level Of Service:	A

Street Name:	Pomona Avenue						16th Street					
Approach:	North Bound			South Bound			East Bound			West Bound		
Movement:	L -	T -	R	L -	T -	R	L -	T -	R	L -	T -	R
Control:	Permitted			Permitted			Permitted			Permitted		
Rights:	Include			Include			Include			Include		
Min. Green:	0	0	0	0	0	0	0	0	0	0	0	0
Lanes:	0 0	0 0	0	1 0	0 1	0	1 0	0 1	0	0 0	0 1	0
Volume Module:												
Base Vol:	0	0	0	34	56	15	0	-200	0	0	-200	0
Growth Adj:	1.00	1.00	1.00	1.00	1.00	1.00	1.00	1.00	1.00	1.00	1.00	1.00
Initial Bse:	0	0	0	34	56	15	0	-200	0	0	-200	0
Added Vol:	0	0	0	0	0	0	0	0	0	0	0	0
PasserByVol:	0	0	0	0	0	0	0	0	0	0	0	0
Initial Fut:	0	0	0	34	56	15	0	-200	0	0	-200	0
User Adj:	1.00	1.00	1.00	1.00	1.00	1.00	1.00	0.00	1.00	1.00	0.00	1.00
PHF Adj:	1.00	1.00	1.00	1.00	1.00	1.00	1.00	0.00	1.00	1.00	0.00	1.00
PHF Volume:	0	0	0	34	56	15	0	0	0	0	0	0
Reduct Vol:	0	0	0	0	0	0	0	0	0	0	0	0
Reduced Vol:	0	0	0	34	56	15	0	0	0	0	0	0
PCE Adj:	1.00	1.00	1.00	1.00	1.00	1.00	1.00	0.00	1.00	1.00	0.00	1.00
MLF Adj:	1.00	1.00	1.00	1.00	1.00	1.00	1.00	0.00	1.00	1.00	0.00	1.00
FinalVolume:	0	0	0	34	56	15	0	0	0	0	0	0
Saturation Flow Module:												
Sat/Lane:	1600	1600	1600	1600	1600	1600	1600	1600	1600	1600	1600	1600
Adjustment:	1.00	1.00	1.00	1.00	1.00	1.00	1.00	1.00	1.00	1.00	1.00	1.00
Lanes:	0.00	0.00	0.00	1.00	0.79	0.21	1.00	1.00	0.00	0.00	1.00	0.00
Final Sat.:	0	0	0	1600	1262	338	1600	1600	0	0	1600	0
Capacity Analysis Module:												
Vol/Sat:	0.00	0.00	0.00	0.02	0.04	0.04	0.00	0.00	0.00	0.00	0.00	0.00
Crit Moves:					****							

APPENDIX C

INTERNAL CAPTURE WORKSHEETS

ITE MULTI-USE PROJECT INTERNAL CAPTURE WORKSHEET

(Source: Chapter 7, ITE *Trip Generation Handbook*, June 2004)

Project Number: 094586001.1
Project Name: Newport Banning Ranch
Scenario: Project Build-out
Analysis Period: PM Peak
Analyst: SA

Land Use A: Retail (Shopping Center)

ITE Land Use Code 820
Size: 75,000

	Total	Internal	External
Enter	257	23	234
Exit	267	32	235
Total	524	55	469
%	100%	**10.5%**	89.5%

Enter from External: 234
Exit to External: 235

Land Use B: Residential (Residential)

ITE Land Use Code 210 / 230 / 232
Size: 1,375

	Total	Internal	External
Enter	603	32	571
Exit	318	23	295
Total	921	55	866
%	100%	**6.0%**	94.0%

Enter from External: 571
Exit to External: 295

Land Use C: None

ITE Land Use Code
Size:

	Total	Internal	External
Enter	0	0	0
Exit	0	0	0
Total	0	0	0
%			

Enter from External: 0
Exit to External: 0

Land Use D: None

ITE Land Use Code
Size:

	Total	Internal	External
Enter	0	0	0
Exit	0	0	0
Total	0	0	0
%			

Enter from External: 0
Exit to External: 0

Demand	12.0%	32	
Balanced		32	
Demand	31.0%	187	
	9.0%	23	Demand
		23	Balanced
	53.0%	169	Demand
Demand	0.0%	0	
Balanced		0	
Demand	0.0%	0	
	0.0%	0	
		0	Balanced
	0.0%	0	Demand
Demand	0.0%	0	
Balanced		0	
Demand	0.0%	0	
	0.0%	0	Demand
		0	Balanced
	0.0%	0	Demand
Demand	0.0%	0	
Balanced		0	
Demand	0.0%	0	
Demand	0.0%	0	
Balanced		0	
Demand	0.0%	0	
Demand	0.0%	0	
Balanced		0	
Demand	0.0%	0	
	0.0%	0	Demand
		0	Balanced
	0.0%	0	Demand
Demand	0.0%	0	
Balanced		0	
Demand	0.0%	0	

NET EXTERNAL TRIPS FOR MULTI-USE DEVELOPMENT

Category	Land Use A	Land Use B	Land Use C	Land Use D	Total
Enter	234	571	0	0	805
Exit	235	295	0	0	530
Total	469	866	0	0	**1,335**
Single Use Trip Gen Estimate	524	921	0	0	**1,445**
Total Internal Trips	55	55	0	0	110

Overall Internal Capture = 7.61%

ITE MULTI-USE PROJECT INTERNAL CAPTURE WORKSHEET

(Source: Chapter 7, ITE *Trip Generation Handbook*, June 2004)

Project Number: 094586001.1
Project Name: Newport Banning Ranch
Scenario: Project Build-out
Analysis Period: Daily
Analyst: SA

Land Use A: Retail (Shopping Center)

ITE Land Use Code 820
Size: 75,000

	Total	Internal	External
Enter	2,816	253	2,563
Exit	2,816	310	2,506
Total	5,632	563	5,069
%	100%	**10.0%**	90.0%

Land Use B: Residential (Residential)

ITE Land Use Code 210 / 230 / 232
Size: 1,375

	Total	Internal	External
Enter	4789	310	4479
Exit	4789	253	4536
Total	9578	563	9015
%	100%	**5.9%**	94.1%

Land Use C: None

ITE Land Use Code
Size:

	Total	Internal	External
Enter	0	0	0
Exit	0	0	0
Total	0	0	0
%			

Land Use D: None

ITE Land Use Code
Size:

	Total	Internal	External
Enter	0	0	0
Exit	0	0	0
Total	0	0	0
%			

Enter from External: 2,563
Exit to External: 2,506

Demand 11.0% 310
Balanced 310
Demand 33.0% 1580

9.0% 253 Demand
253 Balanced
38.0% 1820 Demand

Demand 0.0% 0
Balanced 0
Demand 0.0% 0

0.0% 0 Demand
0 Balanced
0.0% 0 Demand

Demand 0.0% 0
Balanced 0
Demand 0.0% 0

Demand 0.0% 0
Balanced 0
Demand 0.0% 0

Demand 0.0% 0
Balanced 0
0.0% 0 Demand

Demand 0.0% 0
Balanced 0
Demand 0.0% 0

Demand 0.0% 0
Balanced 0
Demand 0.0% 0

Demand 0.0% 0
Balanced 0
Demand 0.0% 0

Demand 0.0% 0
Balanced 0
0.0% 0 Demand

Demand 0.0% 0
Balanced 0
Demand 0.0% 0

Enter from External: 4,479
Exit to External: 4,536

Enter from External: 0
Exit to External: 0

Enter from External: 0
Exit to External: 0

NET EXTERNAL TRIPS FOR MULTI-USE DEVELOPMENT

Category	Land Use A	Land Use B	Land Use C	Land Use D	Total
Enter	2,563	4,479	0	0	7,042
Exit	2,506	4,536	0	0	7,042
Total	5,069	9,015	0	0	**14,084**
Single Use Trip Gen Estimate	5,632	9,578	0	0	**15,210**
Total Internal Trips	563	563	0	0	1,126

Overall Internal Capture = 7.40%

APPENDIX D

COMMITTED AND CUMULATIVE PROJECTS INFORMATION

APPROVED PROJECT LIST

Traffic Phasing Data
Projects Less Than 100% Complete

Project Number	Project Name	Percent
148	FASHION ISLAND EXPANSION	40 %
154	TEMPLE BAT YAHM EXPANSION	65 %
555	CIOSA - IRVINE PROJECT	91 %
910	NEWPORT DUNES	0 %
936	1401 DOVE STREET	0 %
944	1901 WESTCLIFF SURGICAL C	0 %
945	HOAG HOSPITAL PHASE III	0 %
947	BIRCH MEDICAL OFFICE CO	0 %
949	ST. MARK PRESBYTERIAN CHU	77 %
951	CORPORATE PLAZA WEST PHAS	0 %
952	MARINER'S MILE GATEWAY	0 %
953	LAND ROVER NB SERVICE CEN	0 %
954	OLQA CHURCH EXPANSION	0 %
955	2300 NEWPORT BLVD	0 %
957	NEWPORT EXECUTIVE COURT	0 %
958	HOAG HEALTH CENTER	0 %
959	NORTH NEWPORT CENTER	0 %
960	SANTA BARBARA CONDO (MARR	0 %

Traffic Phasing Ordinance
Approved Projects 80% Volume Summary
Intersection Report

Int. Number: 1855 — Int. Name: COAST HWY W / SUPERIOR AVE BALBOA BLVD

	1 Hr Peak Totals									1 Hr Peak						
	NB	SB	EB	WB	NL	NT	NR	SL	ST	SR	EL	ET	ER	WL	WT	WR
AM	13	30	97	42	1	12			6	24	48	49			42	
PM	17	137	102	67		16	1		27	110	63	36	3		67	

Int. Number: 2565 — Int. Name: SUPERIOR AVE / PLACENTIA AVE

	1 Hr Peak Totals									1 Hr Peak						
	NB	SB	EB	WB	NL	NT	NR	SL	ST	SR	EL	ET	ER	WL	WT	WR
AM	52	5	60	54		4	48		5			60		24	30	
PM	70	2	79	247		6	63		2			79		110	138	

Int. Number: 2620 — Int. Name: NEWPORT BLVD / COAST HWY W

	1 Hr Peak Totals									1 Hr Peak						
	NB	SB	EB	WB	NL	NT	NR	SL	ST	SR	EL	ET	ER	WL	WT	WR
AM		61	16	42				26		35		12	4		42	
PM		105	83	26				86		19		76	7		26	

Int. Number: 2260 — Int. Name: COAST HWY W / PROSPECT ST

	1 Hr Peak Totals									1 Hr Peak						
	NB	SB	EB	WB	NL	NT	NR	SL	ST	SR	EL	ET	ER	WL	WT	WR
AM			86	49								86			49	
PM			87	150								87			150	

Coast Hwy / Bluff Rd

AM	0	0	0	0	0	0	0	97	0	0	67	0				
PM	0	0	0	0	0	0	0	102	0	0	177	0				

City Hall & Park Development
1100 Avocado Avenue

Trip Generation Rates

Land Use	Rate Type	Size	Unit	AM Peak Hour			PM Peak Hour			Daily
				In	Out	Total	In	Out	Total	Total
Government Office Complex	ITE-8th		TSF	1.97	0.24	2.21	0.88	1.97	2.85	27.92
Library	ITE-8th		TSF	0.74	0.3	1.04	3.5	3.8	7.30	56.24
City Park*	ITE-8th		ACRES	0.01	0	0.01	0.02	0.04	0.06	1.59
	ITE-8th									

Note: * - City Park AM and PM peak hour trip rates are unavailable. County Park AM and PM peak hour trip generation rates used.

Existing Use

Land Use	Rate Type	Size	Unit	AM Peak Hour			PM Peak Hour			Daily
				In	Out	Total	In	Out	Total	Total
	ITE-8th									
	ITE-8th									
	ITE-8th									
Total						0			0	0

Proposed Use

Land Use	Rate Type	Size	Unit	AM Peak Hour			PM Peak Hour			Daily
				In	Out	Total	In	Out	Total	Total
City Hall	ITE-8th	98	TSF	193	24	217	86	193	279	2736
Library	ITE-8th	17.135	TSF	13	5	18	60	65	125	964
City Park*	ITE-8th	15	ACRES	0	0	0	0	1	1	24
	ITE-8th									
Total				206	29	235	147	259	405	3724

Net Increase				**206**	**29**	**235**	**147**	**259**	**405**	**3724**

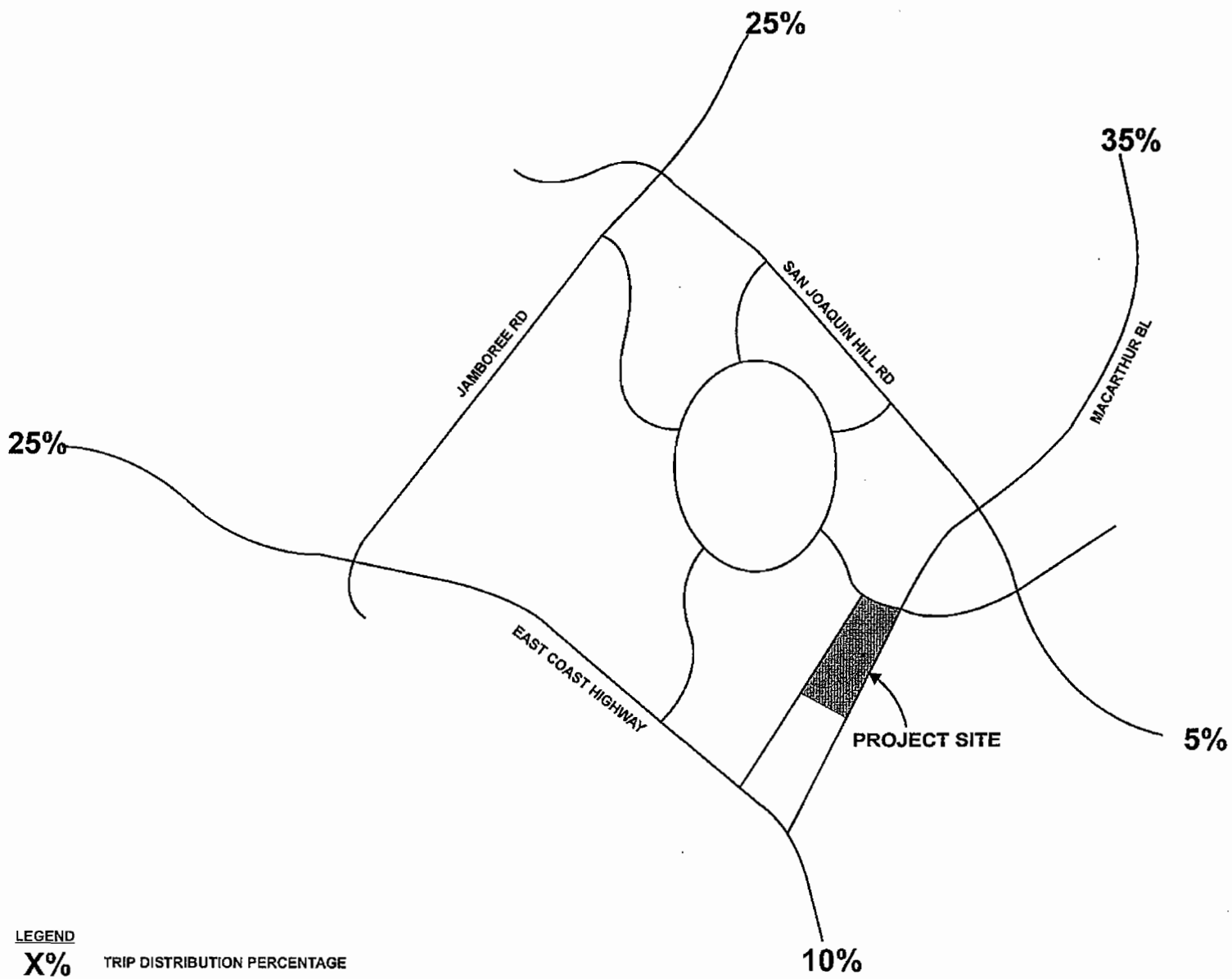

LEGEND

X% TRIP DISTRIBUTION PERCENTAGE

CITY HALL AND PARK DEVELOPMENT

TRIP DISTRIBUTION

Coast Community College
1505-1533 Monrovia Avenue

Trip Generation Rates

Land Use	Rate Type	Size	Unit	AM Peak Hour			PM Peak Hour			Daily
				In	Out	Total	In	Out	Total	Total
Warehouse	ITE-8th		TSF	0.24	0.06	0.30	0.08	0.24	0.32	3.56
General Light Industrial	ITE-8th		TSF	0.81	0.11	0.92	0.12	0.85	0.97	6.97
Office	ITE-8th		TSF	1.36	0.19	1.55	0.25	1.24	1.49	11.01
Community College	ITE-8th		TSF	2.21	0.78	2.99	1.47	1.07	2.54	27.49

Existing Use

Land Use	Rate Type	Size	Unit	AM Peak Hour			PM Peak Hour			Daily
				In	Out	Total	In	Out	Total	Total
Warehouse	ITE-8th	3.6	TSF	1	0	1	0	1	1	13
General Light Industrial	ITE-8th	10	TSF	8	1	9	1	9	10	70
Office	ITE-8th	19.574	TSF	27	4	30	5	24	29	216
	ITE-8th									
Total				36	5	41	6	34	40	298

Proposed Use

Land Use	Rate Type	Size	Unit	AM Peak Hour			PM Peak Hour			Daily
				In	Out	Total	In	Out	Total	Total
Community College	ITE-8th	67	TSF	148	52	200	98	72	170	1842
	ITE-8th		TSF	0	0	0	0	0	0	0
	ITE-8th		TSF	0	0	0	0	0	0	0
	ITE-8th		TSF	0	0	0	0	0	0	0
Total				148	52	200	98	72	170	1842

Net Increase				**112**	**47**	**160**	**92**	**38**	**130**	**1544**

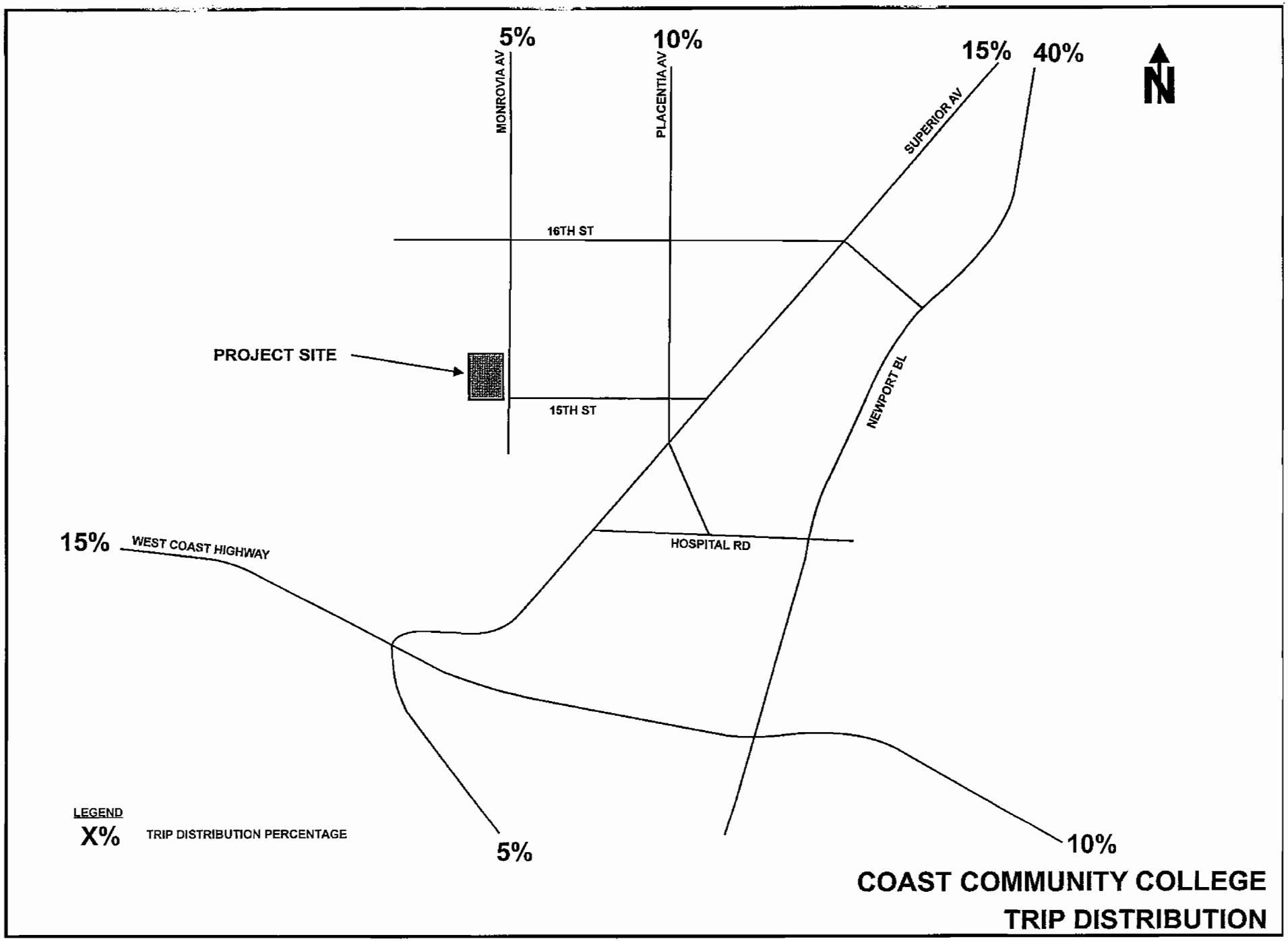

COAST COMMUNITY COLLEGE
TRIP DISTRIBUTION

MARINA PARK.

Table I

TRIP GENERATION SUMMARY

LAND USE	UNITS	AM PEAK HOUR IN	AM PEAK HOUR OUT	AM PEAK HOUR TOTAL	PM PEAK HOUR IN	PM PEAK HOUR OUT	PM PEAK HOUR TOTAL	ADT
TRIP RATES								
Park[1]	Acre	.28	.20	.48	.38	.92	1.30	15.70
Recreational Community Center (ITE 495)[2]	TSF	.99	.63	1.62	.48	1.16	1.64	22.88
Marina (ITE 420)	Berth	.03	.05	.08	.11	.08	.19	2.96
TRIP GENERATION								
Proposed Project								
Park	4.89 Acres	1	1	2	2	4	6	77
Community Ctr/Sailing Ctr/Cafe	21.3 TSF	21	13	34	10	25	35	487
Visitor Marina	23 Berths	1	1	2	3	2	5	68
Sub-Total		23	15	38	15	31	46	632
Existing Use								
Mobile Home Park	57 DU	-5	-13	-18	-7	-7	-14	-194
Park	1.2 Acres	0	0	0	0	-1	-1	-19
Community Ctr	2.9 TSF	-3	-2	-5	-1	-4	-5	-67
NET NEW TRIPS		**15**	**0**	**15**	**7**	**19**	**26**	**352**

Notes:

[1] Park AM and PM trip rates from ITE City Park (411) rate/acre, ADT rate averaged from City (411) and Beach (415) Park ADT rate/acre.

[2] ITE Recreational Community Center (495) trip rates applied to Community Center, Sailing Center, and Café.

The Girl Scout House will be relocated on-site and results in no net change in project trips.

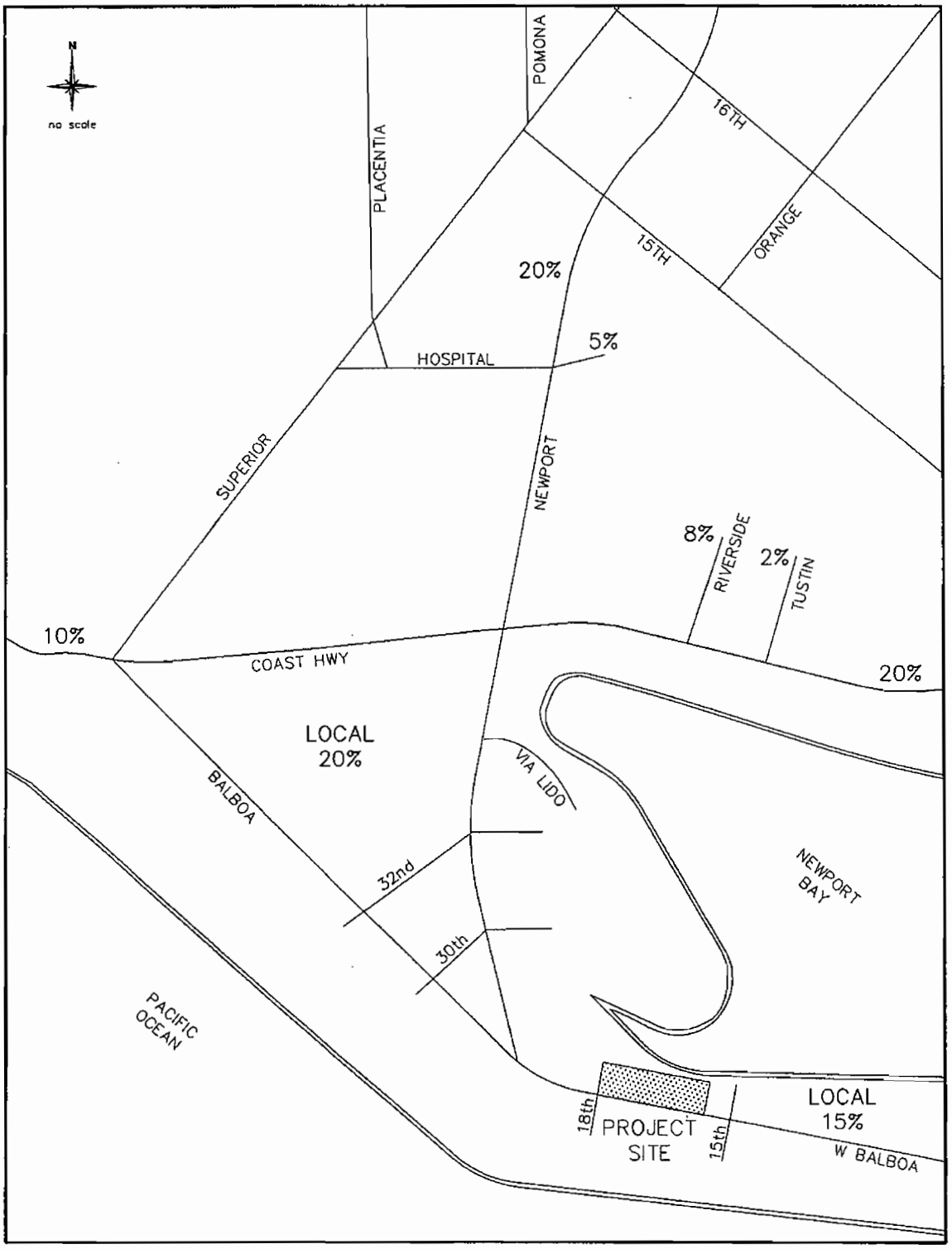

Figure 3

GENERAL PROJECT DISTRIBUTION

Mariner's Medical Arts
1901 Westcliff Drive

Trip Generation Rates

Land Use	Rate Type	Size	Unit	AM Peak Hour			PM Peak Hour			Daily
				In	Out	Total	In	Out	Total	Total
Medical Office	ITE-8th		TSF	1.82	0.48	2.30	0.93	2.53	3.46	36.13
	ITE-8th									
	ITE-8th									
	ITE-8th									

Existing Use

Land Use	Rate Type	Size	Unit	AM Peak Hour			PM Peak Hour			Daily
				In	Out	Total	In	Out	Total	Total
	ITE-8th									
	ITE-8th									
	ITE-8th									
Total						0			0	0

Proposed Use

Land Use	Rate Type	Size	Unit	AM Peak Hour			PM Peak Hour			Daily
				In	Out	Total	In	Out	Total	Total
Medical Office	ITE-8th	12.245	TSF	22	6	28	11	31	42	442
	ITE-8th									
	ITE-8th									
	ITE-8th									
Total				22	6	28	11	31	42	442

Net Increase				**22**	**6**	**28**	**11**	**31**	**42**	**442**

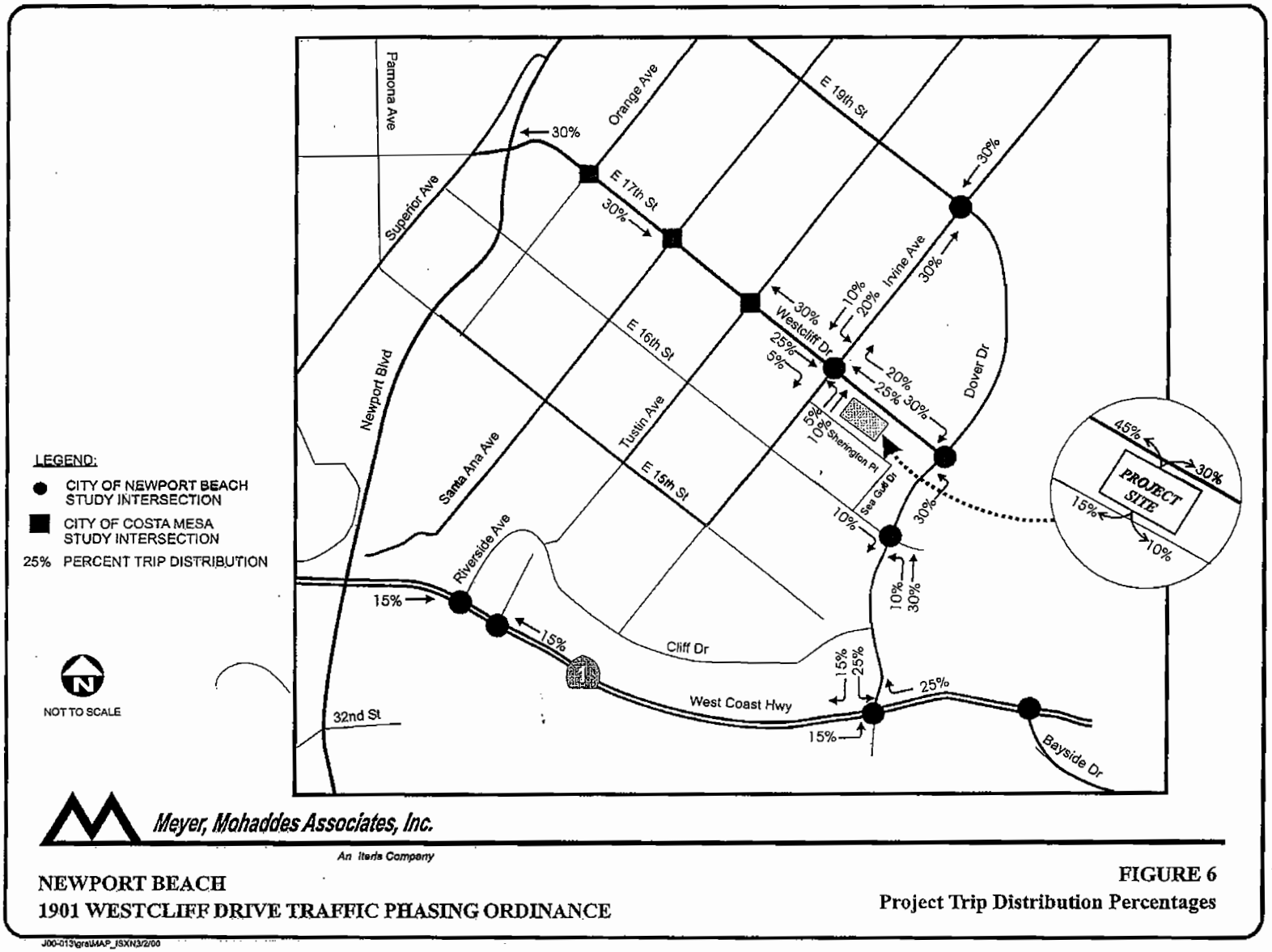

NEWPORT BEACH
1901 WESTCLIFF DRIVE TRAFFIC PHASING ORDINANCE

FIGURE 6
Project Trip Distribution Percentages

J00-013\gra\MAP_ISXN3/2/00

EXHIBIT 4-A

MORMAN TEMPLE TRIP DISTRIBUTION

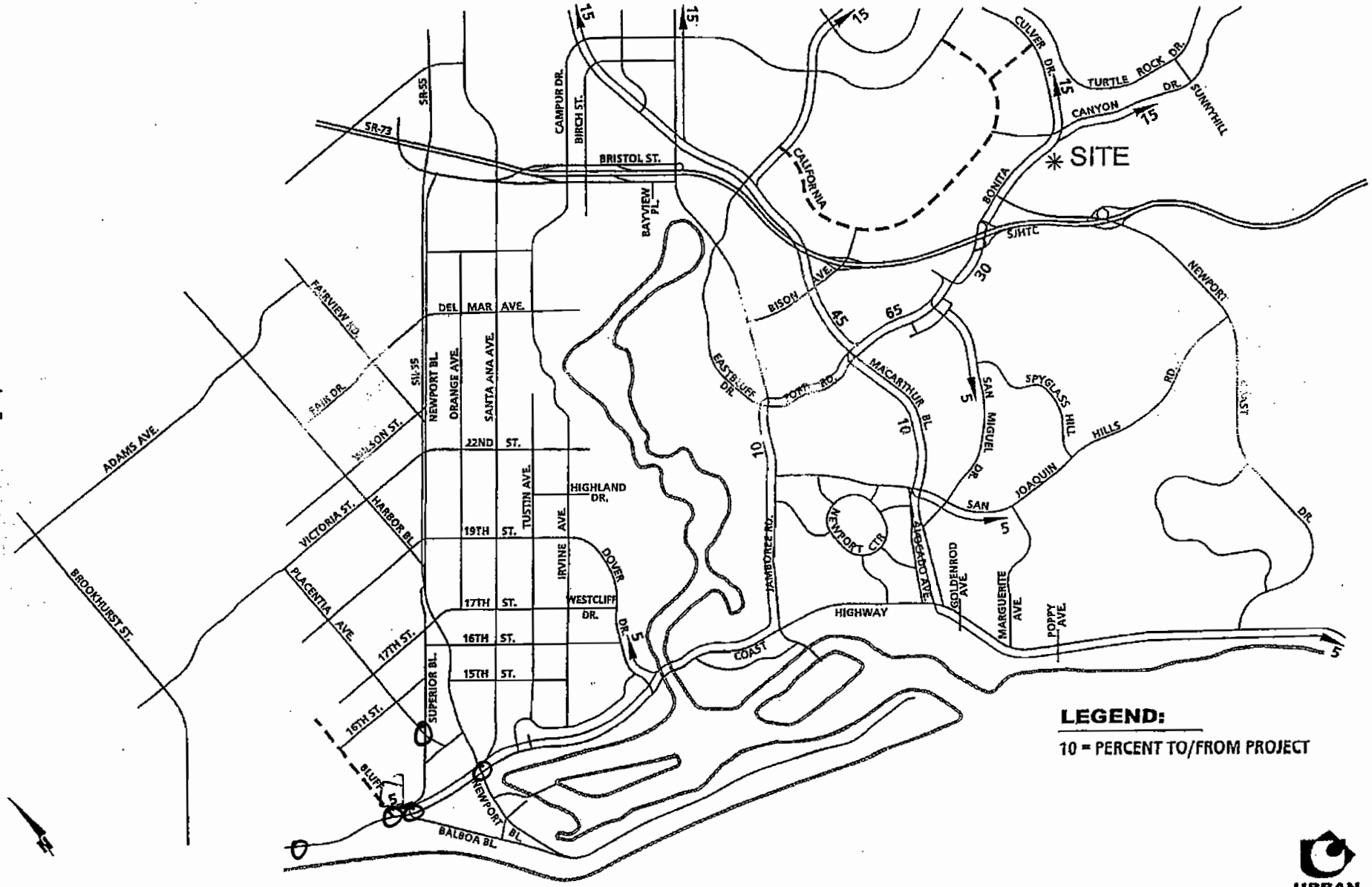

URBAN CROSSROADS

EXHIBIT 12-

NEWPORT COAST TRAFFIC ANALYSIS ZONE
TRIP DISTRIBUTION PATTERN

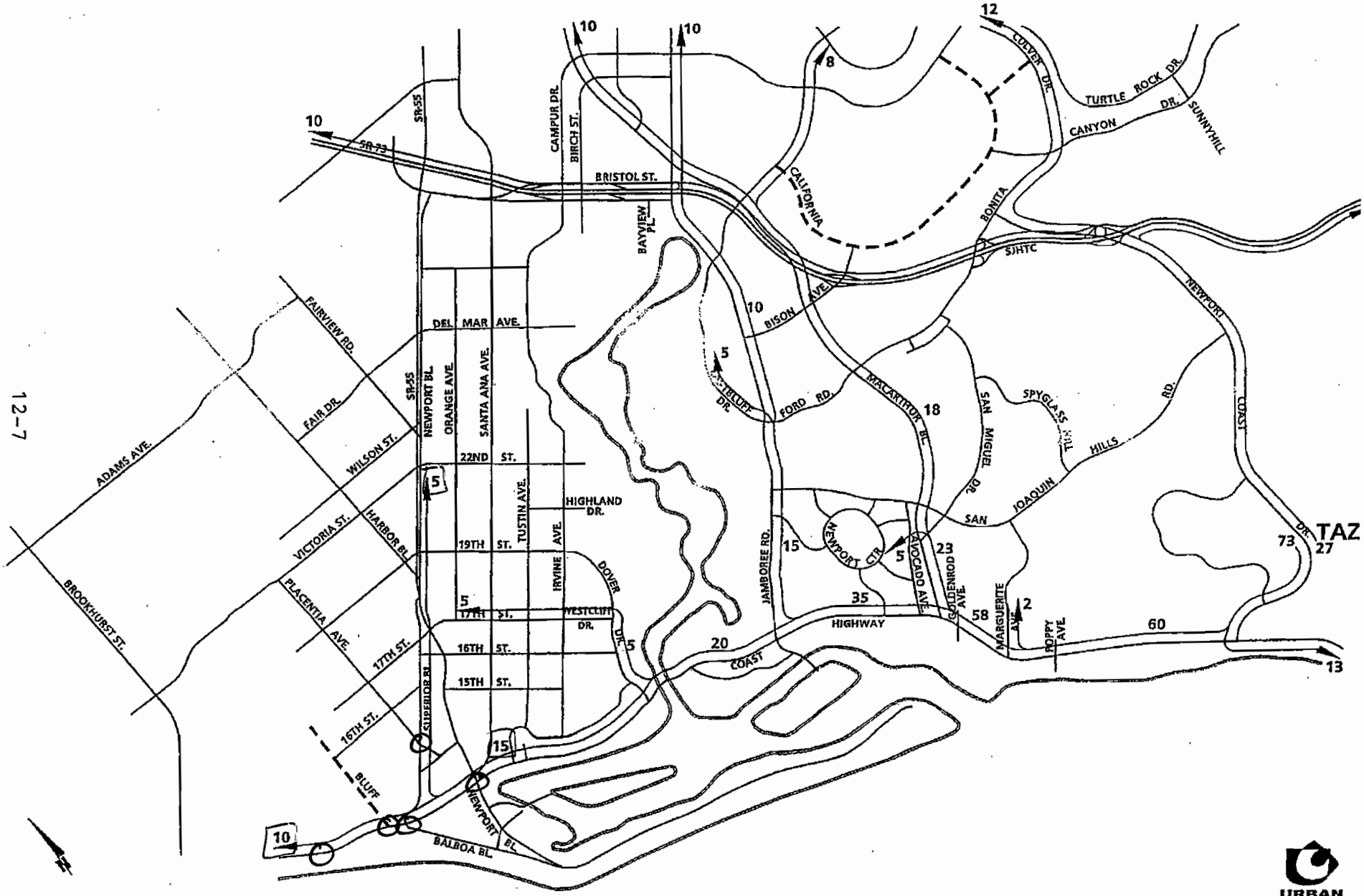

NEWPORT BEACH CUMULATIVE TRAFFIC ANALYSIS, Newport Beach, California - 00636:11

URBAN CROSSROADS

EXHIBIT 12

NEWPORT COAST TRAFFIC ANALYSIS ZONE TRIP DISTRIBUTION PATTERN

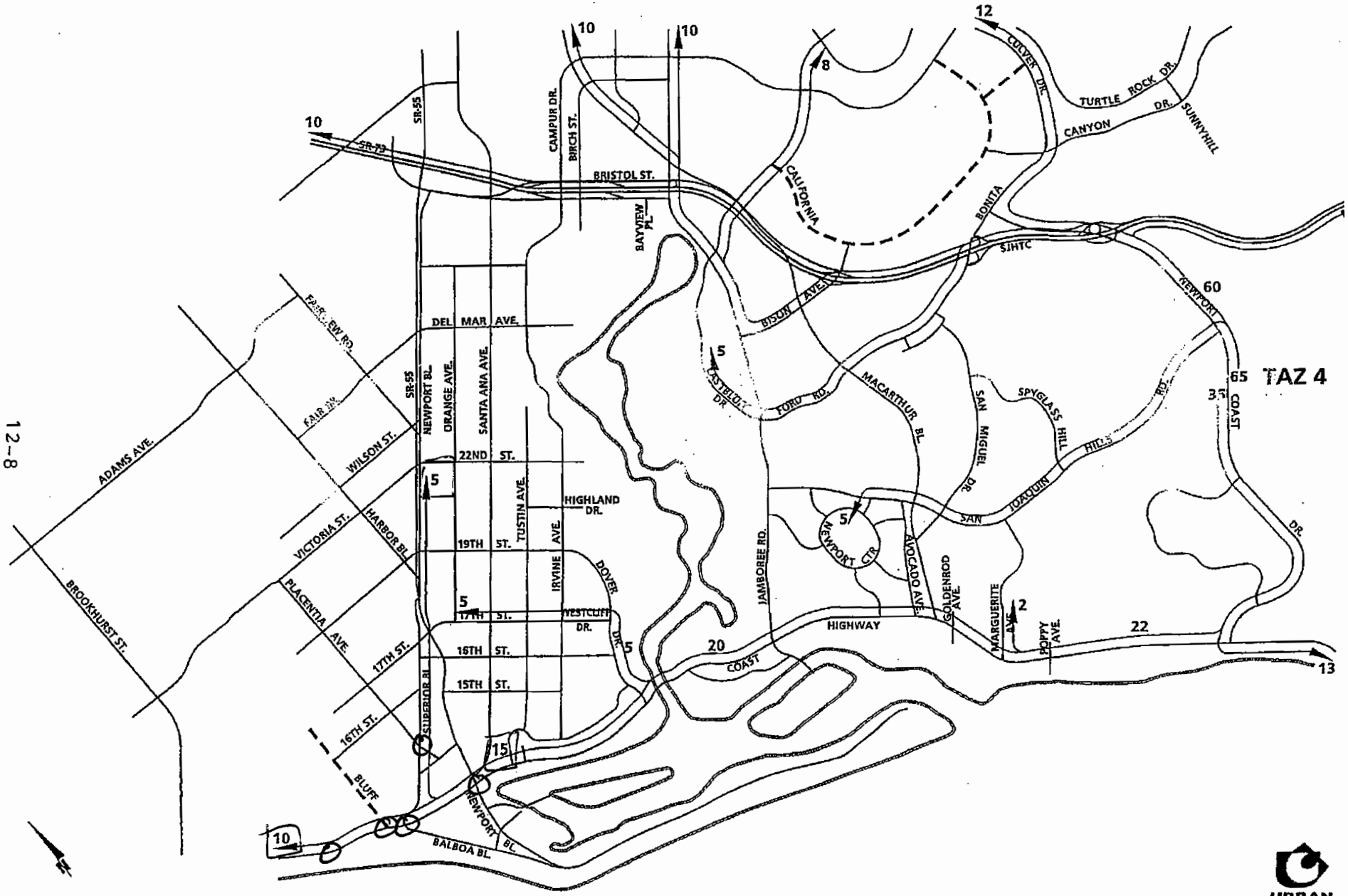

NEWPORT BEACH CUMULATIVE TRAFFIC ANALYSIS, Newport Beach, California - 00636:12

URBAN CROSSROADS

TABLE 13-1

TRIP GENERATION RATES[1]

Newport Ridge

LAND USE	UNITS[2]	PEAK HOUR AM IN	PEAK HOUR AM OUT	PEAK HOUR PM IN	PEAK HOUR PM OUT	DAILY
Multi Family Dwelling	DU	~~0.50~~ 0.09	0.42	0.43	0.20	6.47
Single Family Detached Residential	DU	0.20	0.70	0.70	0.40	11.00
Commercial	TSF	0.60	0.50	1.90	2.00	45.00

[1] Source: City of Newport Beach Trip Generation Rates

[2] DU = Dwelling Units
TSF = Thousand Square Feet

U:\UcJobs\00636\Excel\[00636-02.xls]T 13-1

TABLE 13-2

PROJECT TRIP GENERATION
Newport Ridge

TAZ	PLANNING AREA	LAND USE	QUANTITY	UNITS[1]	PEAK HOUR AM IN	PEAK HOUR AM OUT	PEAK HOUR PM IN	PEAK HOUR PM OUT	DAILY
1	1A	Single Family Detached Residential	93	DU	19	65	65	37	1,023
	2	Single Family Detached Residential	147	DU	29	103	103	59	1,617
	3	Single Family Detached Residential	138	DU	28	97	97	55	1,518
	4	Single Family Detached Residential	125	DU	25	88	88	50	1,375
	5	Multi Family Dwelling	100	DU	90	42	43	20	647
	7	Multi Family Dwelling	63	DU	57	26	27	13	408
	8	Multi Family Dwelling	112	DU	101	47	48	22	725
	9	Multi Family Dwelling	112	DU	101	47	48	22	725
	11	Single Family Detached Residential	323	DU	65	226	226	129	3,553
	12	Commercial	102.959	TSF	62	51	196	206	4,633
	12	Single Family Detached Residential	200	DU	34	98	94	72	1,620
TOTAL FOR TAZ 1					611	890	1,035	685	17,844
2	21	Single Family Detached Residential	350	DU	70	245	245	140	3,850
	22	Single Family Detached Residential	705	DU	141	494	494	282	7,755
TOTAL FOR TAZ 2					211	739	739	422	11,605
3	13	Multi Family Dwelling	347	DU	312	146	149	69	2,245
	14	Single Family Detached Residential	26	DU	5	18	18	10	286
	15	Multi Family Dwelling	547	DU	492	230	235	109	3,539
TOTAL FOR TAZ 3					809	394	402	188	6,070
TOTAL FOR ALL ZONES					1,631	2,023	2,176	1,295	35,519

3,988

REVISE USING REVISE MULTI-FAMILY RATE

* ASSUME 70% OF DU'S ARE OCCUPIED.

[1] DU = Dwelling Units
TSF = Thousand Square Feet

U:\UcJobs\00636\Excel\[00636-02.xls]T 13-2

Newport Ridge

TAZ	Planning Area	Land Use	Qty	Units	AM PEAK HOUR IN	AM PEAK HOUR OUT	PM PEAK HOUR IN	PM PEAK HOUR OUT	Daily
1	1A	SFH	93	DU	6	20	20	11	307
	2	SFH	147	DU	9	31	31	18	485
	3	SFH	138	DU	8	29	29	17	455
	4	SFH	125	DU	8	26	26	15	413
	5	Multi Fam	100	DU	3	13	13	6	194
	7	Multi Fam	63	DU	2	8	8	4	122
	8	Multi Fam	112	DU	3	14	14	7	218
	9	Multi Fam	112	DU	3	14	14	7	218
	11	SFH	323	DU	20	68	68	39	1066
	12	Commer.	102.959	KSF	62	51	196	206	4633
	12	SFH	200	DU	10	29	28	22	486
				TOTAL TAZ 1	**134**	**303**	**447**	**352**	**8597**
2	21	SFH	350	DU	21	74	74	42	1155
	22	SFH	705	DU	42	148	148	85	2327
				TOTAL TAZ 2	**63**	**222**	**222**	**127**	**3482**
3	13	Multi Fam	347	DU	9	44	45	21	674
	14	SFH	26	DU	2	5	5	3	86
	15	Multi Fam	547	DU	15	69	71	33	1062
				TOTAL TAZ 3	**26**	**118**	**121**	**57**	**1822**
TOTAL ALL TAZ					**223**	**643**	**790**	**536**	**13901**

RECALCULATED using revised Multi Family Rate

AM In is 0.09 NOT 0.9

ASSUMED 70% of DUs are Occupied

3490.959

total count	
SFH	2107
Multi Fam	1281
Commerc.	102.959
	3490.959

EXHIBIT 13-4

NEWPORT RIDGE TRAFFIC ANALYSIS ZONE 1
TRIP DISTRIBUTION PATTERNS

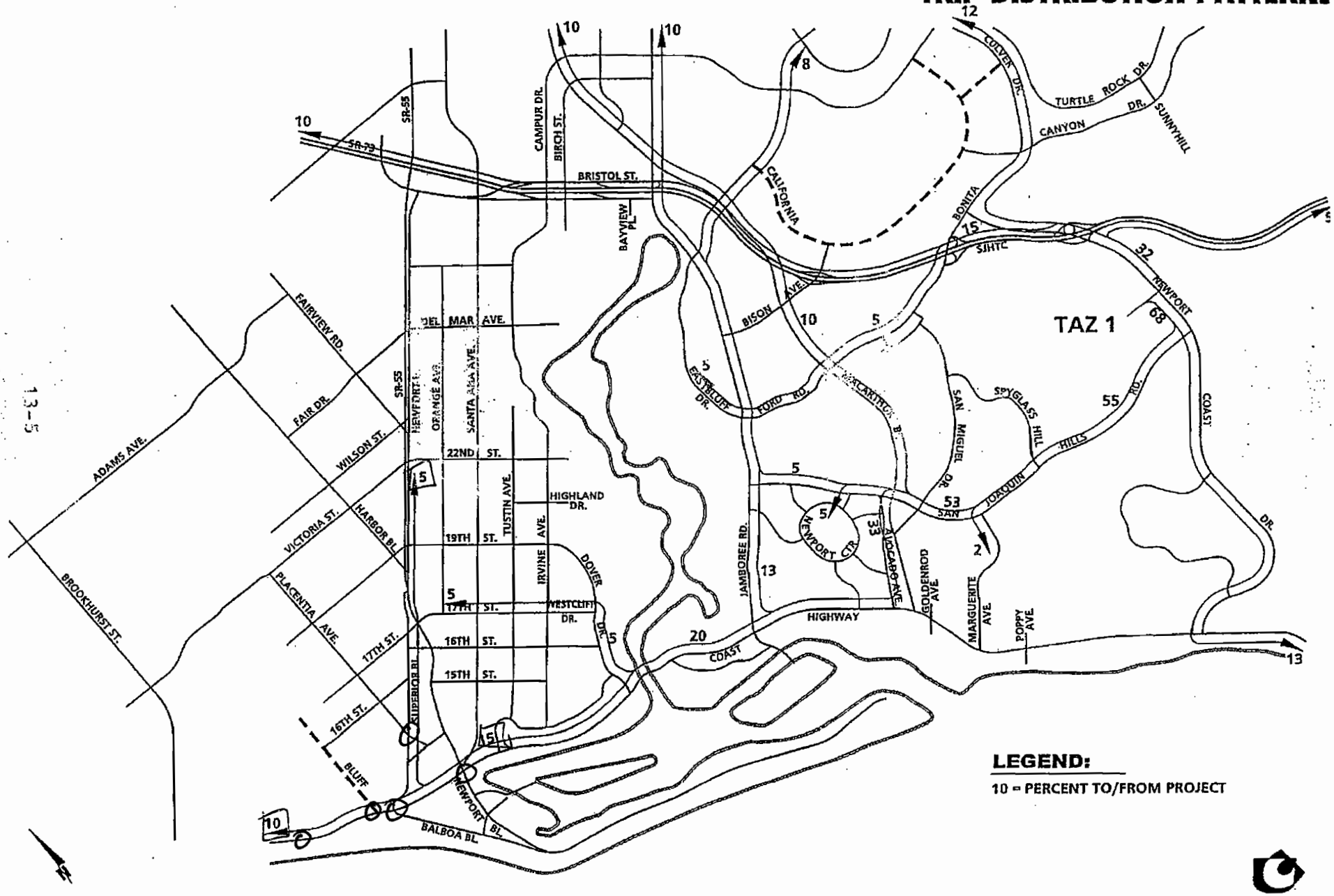

URBAN CROSSROADS

EXHIBIT 13-B

NEWPORT RIDGE TRAFFIC ANALYSIS ZONE 2
TRIP DISTRIBUTION PATTERNS

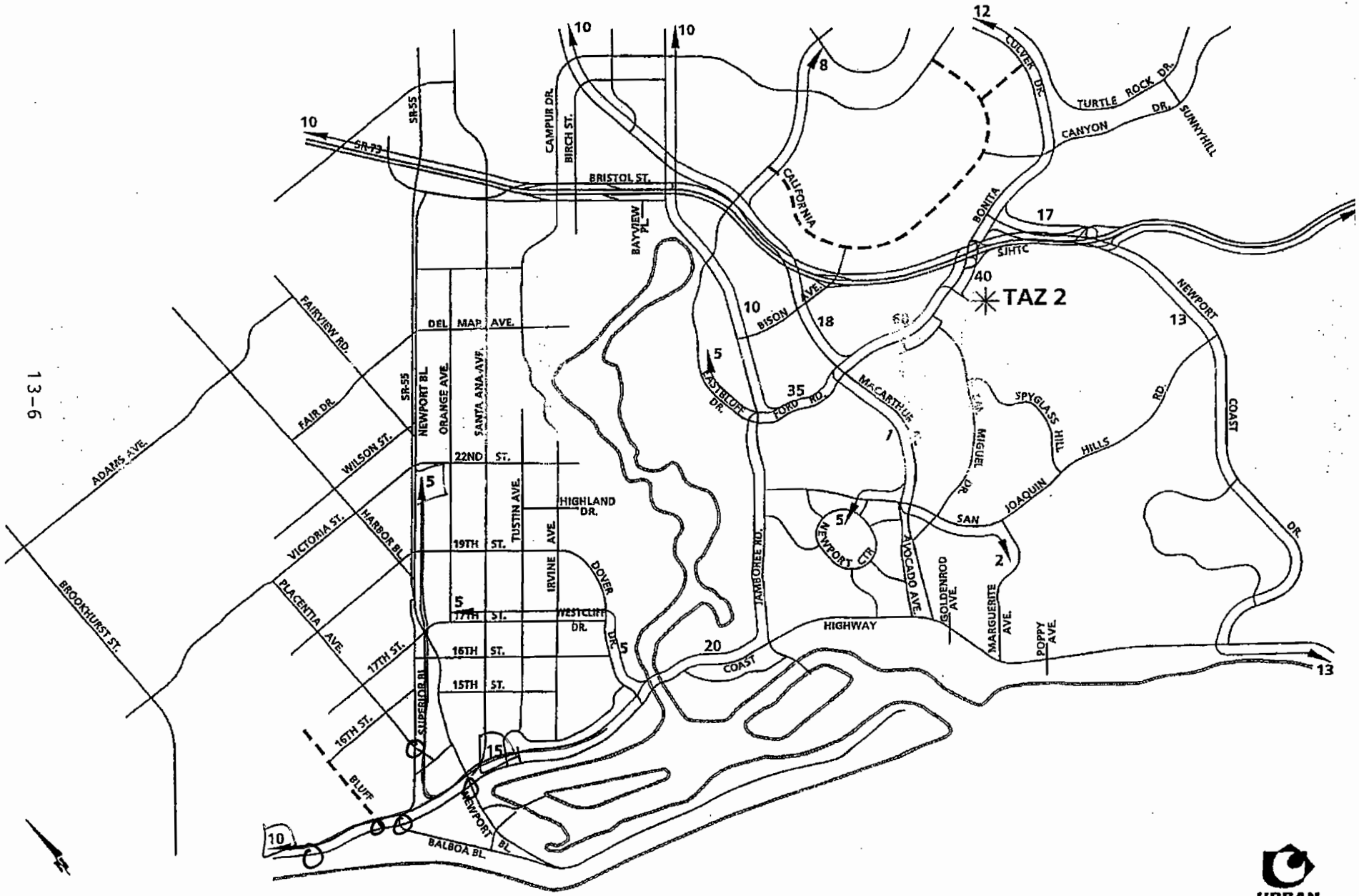

NEWPORT BEACH CUMULATIVE TRAFFIC ANALYSIS, Newport Beach, California - 00636:16

URBAN CROSSROADS

NEWPORT RIDGE TRAFFIC ANALYSIS ZONE 3
TRIP DISTRIBUTION PATTERNS

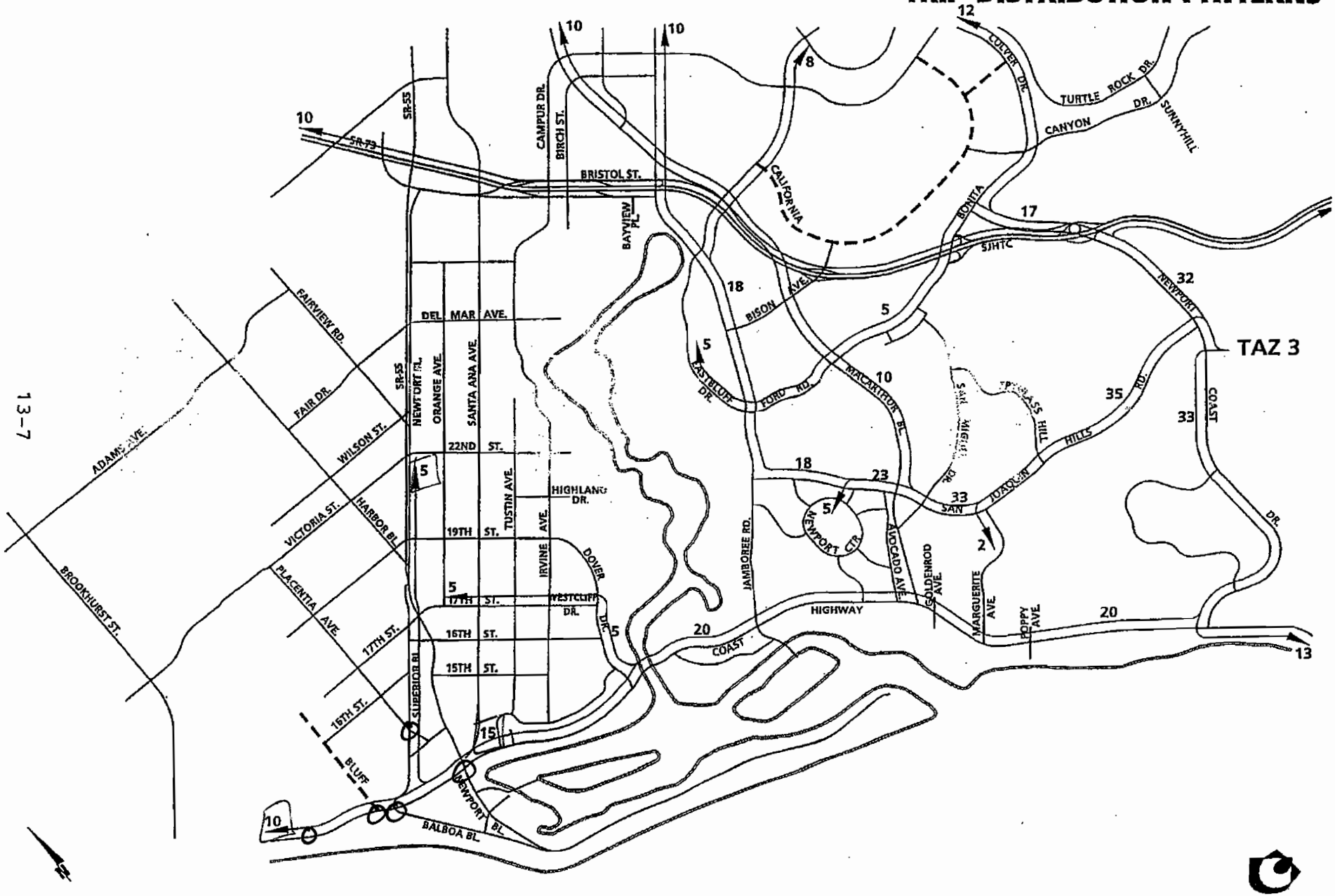

URBAN CROSSROADS

Old Newport GPA
328-340 Old Newport Boulevard

Trip Generation Rates

Land Use	Rate Type	Size	Unit	AM Peak Hour			PM Peak Hour			Daily
				In	Out	Total	In	Out	Total	Total
Office	ITE-8th		TSF	1.36	0.19	1.55	0.25	1.24	1.49	11.01
Medical Office	ITE-8th		TSF	1.82	0.48	2.30	0.93	2.53	3.46	36.13
Apartment	ITE-8th		DU	0.1	0.41	0.51	0.4	0.22	0.62	6.65

Existing Use

Land Use	Rate Type	Size	Unit	AM Peak Hour			PM Peak Hour			Daily
				In	Out	Total	In	Out	Total	Total
Office	ITE-8th	10	TSF	14	2	16	3	12	15	110
Medical Office	ITE-8th	3.012	TSF	5	1	7	3	8	10	109
Apartment	ITE-8th	1	DU	0	0	1	0	0	1	7
	ITE-8th									
Total				19	4	23	6	20	26	226

Proposed Use

Land Use	Rate Type	Size	Unit	AM Peak Hour			PM Peak Hour			Daily
				In	Out	Total	In	Out	Total	Total
Medical Office	ITE-8th	25.725	TSF	47	12	59	24	65	89	929
	ITE-8th		TSF	0	0	0	0	0	0	0
	ITE-8th		TSF	0	0	0	0	0	0	0
	ITE-8th		TSF	0	0	0	0	0	0	0
Total				47	12	59	24	65	89	929

Net Increase				**28**	**9**	**36**	**18**	**45**	**63**	**704**

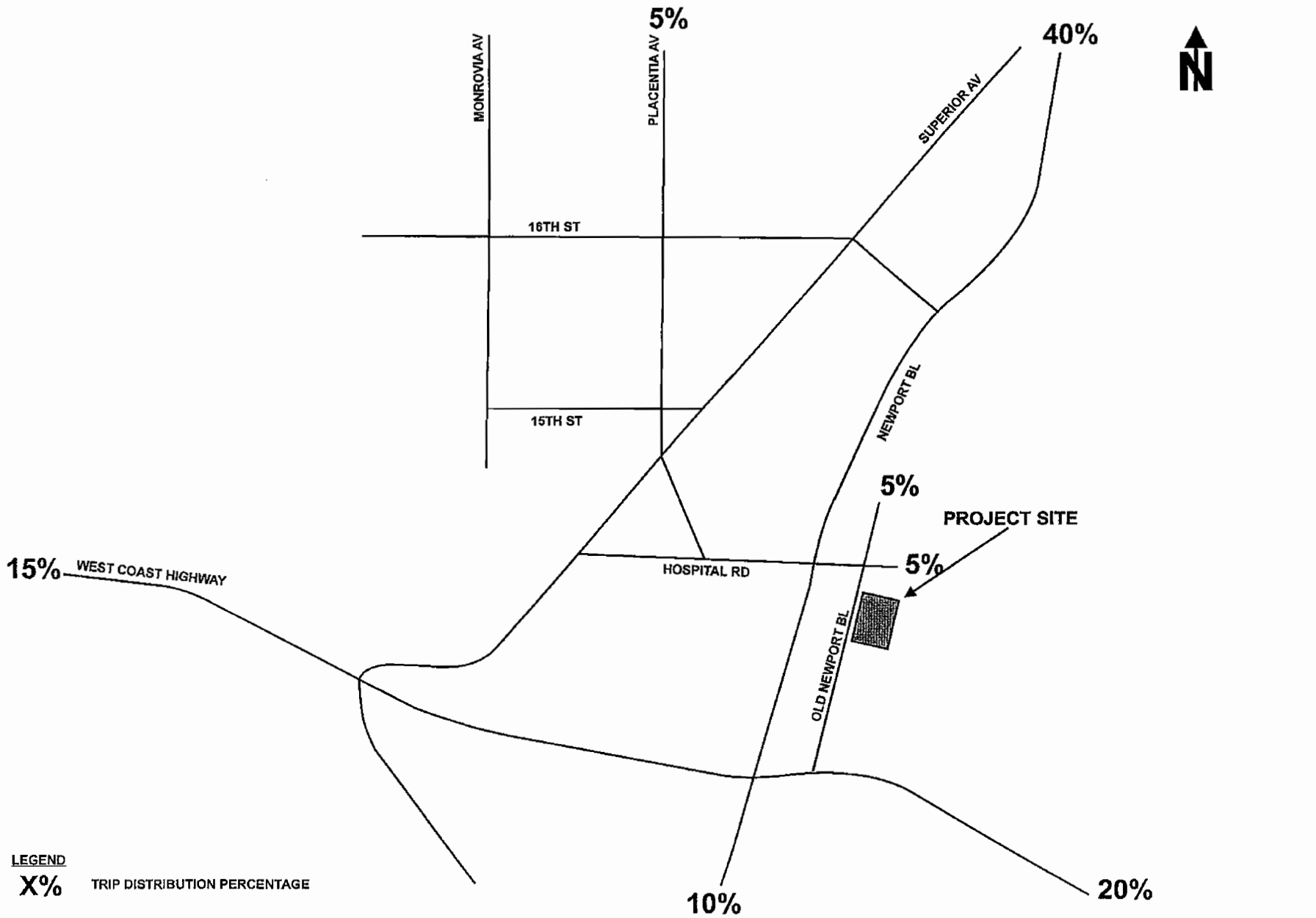

OLD NEWPORT GPA
TRIP DISTRIBUTION

APPENDIX E

1% WORKSHEETS – TPO ANALYSIS

1% TRAFFIC VOLUME ANALYSIS

TPO Analysis - Approved Projects

INTERSECTION: 4 Superior Avenue / Placentia Avenue

Existing Traffic Volumes Based on Average Daily Traffic ► 2009 AM

APPROACH DIRECTION	EXISTING PEAK HOUR VOLUME	PEAK HOUR REGIONAL GROWTH VOLUME		APPROVED PROJECTS PEAK HOUR VOL	PROJECTED PEAK HOUR VOLUME	1% OF PROJECTED PEAK HOUR VOLUME	PROJECT PEAK HOUR VOLUME
Northbound	1182	0.00%	0	30	1212	12	0
Southbound	309	0.00%	0	27	336	3	26
Eastbound	611	0.00%	0	5	616	6	59
Westbound	296	0.00%	0	28	324	3	0

FALSE Project Traffic is estimated to be less than 1% of Projected Peak Hour Traffic Volumes.

TRUE Project Traffic is estimated to be equal to or greater than 1% of Projected Peak Hour Traffic Volumes. Intersection Capacity Utilization (ICU) Analysis is required.

1% TRAFFIC VOLUME ANALYSIS

TPO Analysis - Approved Projects

INTERSECTION: 4 Superior Avenue / Placentia Avenue

Existing Traffic Volumes Based on Average Daily Traffic ► 2009 PM

APPROACH DIRECTION	EXISTING PEAK HOUR VOLUME	PEAK HOUR REGIONAL GROWTH VOLUME		APPROVED PROJECTS PEAK HOUR VOL	PROJECTED PEAK HOUR VOLUME	1% OF PROJECTED PEAK HOUR VOLUME	PROJECT PEAK HOUR VOLUME
Northbound	665	0.00%	0	40	705	7	0
Southbound	732	0.00%	0	124	856	9	64
Eastbound	493	0.00%	0	2	495	5	41
Westbound	414	0.00%	0	38	452	5	0

FALSE Project Traffic is estimated to be less than 1% of Projected Peak Hour Traffic Volumes.

TRUE Project Traffic is estimated to be equal to or greater than 1% of Projected Peak Hour Traffic Volumes. Intersection Capacity Utilization (ICU) Analysis is required.

1% TRAFFIC VOLUME ANALYSIS

TPO Analysis - Approved Projects

INTERSECTION: 5 Newport Boulevard / Hospital Road

Existing Traffic Volumes Based on Average Daily Traffic ► 2009 AM

APPROACH DIRECTION	EXISTING PEAK HOUR VOLUME	PEAK HOUR REGIONAL GROWTH VOLUME		APPROVED PROJECTS PEAK HOUR VOL	PROJECTED PEAK HOUR VOLUME	1% OF PROJECTED PEAK HOUR VOLUME	PROJECT PEAK HOUR VOLUME
Northbound	1598	5.00%	80	72	1750	18	0
Southbound	1490	5.00%	75	74	1639	16	0
Eastbound	520	0.00%	0	21	541	5	0
Westbound	317	0.00%	0	1	318	3	0

TRUE Project Traffic is estimated to be less than 1% of Projected Peak Hour Traffic Volumes.

FALSE Project Traffic is estimated to be equal to or greater than 1% of Projected Peak Hour Traffic Volumes. Intersection Capacity Utilization (ICU) Analysis is required.

1% TRAFFIC VOLUME ANALYSIS

TPO Analysis - Approved Projects

INTERSECTION: 5 Newport Boulevard / Hospital Road

Existing Traffic Volumes Based on Average Daily Traffic ► 2009 PM

APPROACH DIRECTION	EXISTING PEAK HOUR VOLUME	PEAK HOUR REGIONAL GROWTH VOLUME		APPROVED PROJECTS PEAK HOUR VOL	PROJECTED PEAK HOUR VOLUME	1% OF PROJECTED PEAK HOUR VOLUME	PROJECT PEAK HOUR VOLUME
Northbound	1387	5.00%	69	95	1551	16	0
Southbound	1766	5.00%	88	68	1922	19	0
Eastbound	615	0.00%	0	60	675	7	0
Westbound	337	0.00%	0	0	337	3	0

TRUE Project Traffic is estimated to be less than 1% of Projected Peak Hour Traffic Volumes.

FALSE Project Traffic is estimated to be equal to or greater than 1% of Projected Peak Hour Traffic Volumes. Intersection Capacity Utilization (ICU) Analysis is required.

1% TRAFFIC VOLUME ANALYSIS

TPO Analysis - Approved Projects

INTERSECTION: 6 Orange Street / W. Coast Highway

Existing Traffic Volumes Based on Average Daily Traffic ► 2009 AM

APPROACH DIRECTION	EXISTING PEAK HOUR VOLUME	PEAK HOUR REGIONAL GROWTH VOLUME		APPROVED PROJECTS PEAK HOUR VOL	PROJECTED PEAK HOUR VOLUME	1% OF PROJECTED PEAK HOUR VOLUME	PROJECT PEAK HOUR VOLUME
Northbound	120	0.00%	0	0	120	1	0
Southbound	61	0.00%	0	0	61	1	0
Eastbound	2716	5.00%	136	62	2914	29	42
Westbound	930	5.00%	47	37	1014	10	103

FALSE Project Traffic is estimated to be less than 1% of Projected Peak Hour Traffic Volumes.

TRUE Project Traffic is estimated to be equal to or greater than 1% of Projected Peak Hour Traffic Volumes. Intersection Capacity Utilization (ICU) Analysis is required.

1% TRAFFIC VOLUME ANALYSIS

TPO Analysis - Approved Projects

INTERSECTION: 6 Orange Street / W. Coast Highway

Existing Traffic Volumes Based on Average Daily Traffic ► 2009 PM

APPROACH DIRECTION	EXISTING PEAK HOUR VOLUME	PEAK HOUR REGIONAL GROWTH VOLUME		APPROVED PROJECTS PEAK HOUR VOL	PROJECTED PEAK HOUR VOLUME	1% OF PROJECTED PEAK HOUR VOLUME	PROJECT PEAK HOUR VOLUME
Northbound	74	0.00%	0	0	74	1	0
Southbound	52	0.00%	0	0	52	1	0
Eastbound	1233	5.00%	62	56	1351	14	113
Westbound	2867	5.00%	143	95	3105	31	78

FALSE Project Traffic is estimated to be less than 1% of Projected Peak Hour Traffic Volumes.

TRUE Project Traffic is estimated to be equal to or greater than 1% of Projected Peak Hour Traffic Volumes. Intersection Capacity Utilization (ICU) Analysis is required.

1% TRAFFIC VOLUME ANALYSIS

TPO Analysis - Approved Projects

INTERSECTION: 8 Superior/Balboa / W. Coast Hwy

Existing Traffic Volumes Based on Average Daily Traffic ► 2009 AM

APPROACH DIRECTION	EXISTING PEAK HOUR VOLUME	PEAK HOUR REGIONAL GROWTH VOLUME		APPROVED PROJECTS PEAK HOUR VOL	PROJECTED PEAK HOUR VOLUME	1% OF PROJECTED PEAK HOUR VOLUME	PROJECT PEAK HOUR VOLUME
Northbound	548	0.00%	0	7	555	6	10
Southbound	582	0.00%	0	15	597	6	0
Eastbound	2834	5.00%	142	73	3049	30	93
Westbound	1018	5.00%	51	42	1111	11	20

FALSE Project Traffic is estimated to be less than 1% of Projected Peak Hour Traffic Volumes.

TRUE Project Traffic is estimated to be equal to or greater than 1% of Projected Peak Hour Traffic Volumes. Intersection Capacity Utilization (ICU) Analysis is required.

1% TRAFFIC VOLUME ANALYSIS

TPO Analysis - Approved Projects

INTERSECTION: 8 Superior/Balboa / W. Coast Hwy

Existing Traffic Volumes Based on Average Daily Traffic ► 2009 PM

APPROACH DIRECTION	EXISTING PEAK HOUR VOLUME	PEAK HOUR REGIONAL GROWTH VOLUME		APPROVED PROJECTS PEAK HOUR VOL	PROJECTED PEAK HOUR VOLUME	1% OF PROJECTED PEAK HOUR VOLUME	PROJECT PEAK HOUR VOLUME
Northbound	540	0.00%	0	9	549	5	28
Southbound	1181	0.00%	0	69	1250	13	0
Eastbound	1487	5.00%	74	71	1632	16	61
Westbound	2242	5.00%	112	67	2421	24	67

FALSE Project Traffic is estimated to be less than 1% of Projected Peak Hour Traffic Volumes.

TRUE Project Traffic is estimated to be equal to or greater than 1% of Projected Peak Hour Traffic Volumes. Intersection Capacity Utilization (ICU) Analysis is required.

1% TRAFFIC VOLUME ANALYSIS

TPO Analysis - Approved Projects

INTERSECTION: 9 Newport Boulevard / W. Coast Highway

Existing Traffic Volumes Based on Average Daily Traffic ► 2009 AM

APPROACH DIRECTION	EXISTING PEAK HOUR VOLUME	PEAK HOUR REGIONAL GROWTH VOLUME		APPROVED PROJECTS PEAK HOUR VOL	PROJECTED PEAK HOUR VOLUME	1% OF PROJECTED PEAK HOUR VOLUME	PROJECT PEAK HOUR VOLUME
Northbound	0	5.00%	0	0	0	0	0
Southbound	671	5.00%	34	52	757	8	0
Eastbound	2270	5.00%	114	16	2400	24	67
Westbound	1161	5.00%	58	42	1261	13	20

FALSE Project Traffic is estimated to be less than 1% of Projected Peak Hour Traffic Volumes.

TRUE Project Traffic is estimated to be equal to or greater than 1% of Projected Peak Hour Traffic Volumes. Intersection Capacity Utilization (ICU) Analysis is required.

1% TRAFFIC VOLUME ANALYSIS

TPO Analysis - Approved Projects

INTERSECTION: 9 Newport Boulevard / W. Coast Highway

Existing Traffic Volumes Based on Average Daily Traffic ► 2009 PM

APPROACH DIRECTION	EXISTING PEAK HOUR VOLUME	PEAK HOUR REGIONAL GROWTH VOLUME		APPROVED PROJECTS PEAK HOUR VOL	PROJECTED PEAK HOUR VOLUME	1% OF PROJECTED PEAK HOUR VOLUME	PROJECT PEAK HOUR VOLUME
Northbound	0	5.00%	0	0	0	0	0
Southbound	979	5.00%	49	63	1091	11	0
Eastbound	1420	5.00%	71	83	1574	16	41
Westbound	2310	5.00%	116	26	2452	25	67

FALSE Project Traffic is estimated to be less than 1% of Projected Peak Hour Traffic Volumes.

TRUE Project Traffic is estimated to be equal to or greater than 1% of Projected Peak Hour Traffic Volumes. Intersection Capacity Utilization (ICU) Analysis is required.

1% TRAFFIC VOLUME ANALYSIS

TPO Analysis - Approved Projects

INTERSECTION: 10 Riverside Avenue / W. Coast Highway

Existing Traffic Volumes Based on Average Daily Traffic ► 2009 AM

APPROACH DIRECTION	EXISTING PEAK HOUR VOLUME	PEAK HOUR REGIONAL GROWTH VOLUME		APPROVED PROJECTS PEAK HOUR VOL	PROJECTED PEAK HOUR VOLUME	1% OF PROJECTED PEAK HOUR VOLUME	PROJECT PEAK HOUR VOLUME
Northbound	1	0.00%	0	0	1	0	0
Southbound	385	0.00%	0	2	387	4	6
Eastbound	2209	5.00%	110	103	2422	24	67
Westbound	1208	5.00%	60	93	1361	14	14

FALSE Project Traffic is estimated to be less than 1% of Projected Peak Hour Traffic Volumes.

TRUE Project Traffic is estimated to be equal to or greater than 1% of Projected Peak Hour Traffic Volumes. Intersection Capacity Utilization (ICU) Analysis is required.

1% TRAFFIC VOLUME ANALYSIS

TPO Analysis - Approved Projects

INTERSECTION: 10 Riverside Avenue / W. Coast Highway

Existing Traffic Volumes Based on Average Daily Traffic ► 2009 PM

APPROACH DIRECTION	EXISTING PEAK HOUR VOLUME	PEAK HOUR REGIONAL GROWTH VOLUME		APPROVED PROJECTS PEAK HOUR VOL	PROJECTED PEAK HOUR VOLUME	1% OF PROJECTED PEAK HOUR VOLUME	PROJECT PEAK HOUR VOLUME
Northbound	23	0.00%	0	0	23	0	0
Southbound	504	0.00%	0	2	506	5	23
Eastbound	1622	5.00%	81	138	1841	18	41
Westbound	2236	5.00%	112	142	2490	25	44

FALSE Project Traffic is estimated to be less than 1% of Projected Peak Hour Traffic Volumes.

TRUE Project Traffic is estimated to be equal to or greater than 1% of Projected Peak Hour Traffic Volumes. Intersection Capacity Utilization (ICU) Analysis is required.

1% TRAFFIC VOLUME ANALYSIS

TPO Analysis - Approved Projects

INTERSECTION: 11 Tustin Avenue / W. Coast Highway

Existing Traffic Volumes Based on Average Daily Traffic ► 2009 AM

APPROACH DIRECTION	EXISTING PEAK HOUR VOLUME	PEAK HOUR REGIONAL GROWTH VOLUME		APPROVED PROJECTS PEAK HOUR VOL	PROJECTED PEAK HOUR VOLUME	1% OF PROJECTED PEAK HOUR VOLUME	PROJECT PEAK HOUR VOLUME
Northbound	0	0.00%	0	0	0	0	0
Southbound	48	0.00%	0	0	48	0	4
Eastbound	2035	5.00%	102	108	2245	22	42
Westbound	1256	5.00%	63	93	1412	14	10

FALSE Project Traffic is estimated to be less than 1% of Projected Peak Hour Traffic Volumes.

TRUE Project Traffic is estimated to be equal to or greater than 1% of Projected Peak Hour Traffic Volumes. Intersection Capacity Utilization (ICU) Analysis is required.

1% TRAFFIC VOLUME ANALYSIS

TPO Analysis - Approved Projects

INTERSECTION: 11 Tustin Avenue / W. Coast Highway

Existing Traffic Volumes Based on Average Daily Traffic ► 2009 PM

APPROACH DIRECTION	EXISTING PEAK HOUR VOLUME	PEAK HOUR REGIONAL GROWTH VOLUME		APPROVED PROJECTS PEAK HOUR VOL	PROJECTED PEAK HOUR VOLUME	1% OF PROJECTED PEAK HOUR VOLUME	PROJECT PEAK HOUR VOLUME
Northbound	3	0.00%	0	0	3	0	0
Southbound	82	0.00%	0	0	82	1	15
Eastbound	1490	5.00%	75	140	1705	17	28
Westbound	2282	5.00%	114	143	2539	25	28

FALSE Project Traffic is estimated to be less than 1% of Projected Peak Hour Traffic Volumes.

TRUE Project Traffic is estimated to be equal to or greater than 1% of Projected Peak Hour Traffic Volumes. Intersection Capacity Utilization (ICU) Analysis is required.

1% TRAFFIC VOLUME ANALYSIS

TPO Analysis - Approved Projects

INTERSECTION: 12 Dover Drive / W. Coast Highway

Existing Traffic Volumes Based on Average Daily Traffic ► 2009 AM

APPROACH DIRECTION	EXISTING PEAK HOUR VOLUME	PEAK HOUR REGIONAL GROWTH VOLUME		APPROVED PROJECTS PEAK HOUR VOL	PROJECTED PEAK HOUR VOLUME	1% OF PROJECTED PEAK HOUR VOLUME	PROJECT PEAK HOUR VOLUME
Northbound	106	0.00%	0	0	106	1	0
Southbound	999	0.00%	0	27	1026	10	0
Eastbound	2054	5.00%	103	103	2260	23	26
Westbound	1723	5.00%	86	98	1907	19	10

FALSE Project Traffic is estimated to be less than 1% of Projected Peak Hour Traffic Volumes.

TRUE Project Traffic is estimated to be equal to or greater than 1% of Projected Peak Hour Traffic Volumes. Intersection Capacity Utilization (ICU) Analysis is required.

1% TRAFFIC VOLUME ANALYSIS

TPO Analysis - Approved Projects

INTERSECTION: 12 Dover Drive / W. Coast Highway

Existing Traffic Volumes Based on Average Daily Traffic ► 2009 PM

APPROACH DIRECTION	EXISTING PEAK HOUR VOLUME	PEAK HOUR REGIONAL GROWTH VOLUME		APPROVED PROJECTS PEAK HOUR VOL	PROJECTED PEAK HOUR VOLUME	1% OF PROJECTED PEAK HOUR VOLUME	PROJECT PEAK HOUR VOLUME
Northbound	118	0.00%	0	0	118	1	0
Southbound	1098	0.00%	0	26	1124	11	0
Eastbound	1440	5.00%	72	166	1678	17	20
Westbound	3224	5.00%	161	139	3524	35	28

FALSE Project Traffic is estimated to be less than 1% of Projected Peak Hour Traffic Volumes.

TRUE Project Traffic is estimated to be equal to or greater than 1% of Projected Peak Hour Traffic Volumes. Intersection Capacity Utilization (ICU) Analysis is required.

1% TRAFFIC VOLUME ANALYSIS

TPO Analysis - Approved Projects

INTERSECTION: 48 Irvine Avenue / 17th Street

Existing Traffic Volumes Based on Average Daily Traffic ► 2009 AM

APPROACH DIRECTION	EXISTING PEAK HOUR VOLUME	PEAK HOUR REGIONAL GROWTH VOLUME		APPROVED PROJECTS PEAK HOUR VOL	PROJECTED PEAK HOUR VOLUME	1% OF PROJECTED PEAK HOUR VOLUME	PROJECT PEAK HOUR VOLUME
Northbound	899	5.00%	45	2	946	9	0
Southbound	788	5.00%	39	6	833	8	0
Eastbound	915	0.00%	0	13	928	9	32
Westbound	372	0.00%	0	14	386	4	20

FALSE Project Traffic is estimated to be less than 1% of Projected Peak Hour Traffic Volumes.

TRUE Project Traffic is estimated to be equal to or greater than 1% of Projected Peak Hour Traffic Volumes. Intersection Capacity Utilization (ICU) Analysis is required.

1% TRAFFIC VOLUME ANALYSIS

TPO Analysis - Approved Projects

INTERSECTION: 48 Irvine Avenue / 17th Street

Existing Traffic Volumes Based on Average Daily Traffic ► 2009 PM

APPROACH DIRECTION	EXISTING PEAK HOUR VOLUME	PEAK HOUR REGIONAL GROWTH VOLUME		APPROVED PROJECTS PEAK HOUR VOL	PROJECTED PEAK HOUR VOLUME	1% OF PROJECTED PEAK HOUR VOLUME	PROJECT PEAK HOUR VOLUME
Northbound	1045	5.00%	52	0	1097	11	0
Southbound	1030	5.00%	52	8	1090	11	0
Eastbound	1003	0.00%	0	49	1052	11	35
Westbound	808	0.00%	0	23	831	8	42

FALSE Project Traffic is estimated to be less than 1% of Projected Peak Hour Traffic Volumes.

TRUE Project Traffic is estimated to be equal to or greater than 1% of Projected Peak Hour Traffic Volumes. Intersection Capacity Utilization (ICU) Analysis is required.

APPENDIX F

INTERSECTION ANALYSIS WORKSHEETS – TPO ANALYSIS

Newport Banning Ranch
Year 2016 without Project - TPO Analysis
AM Peak Hour

Scenario Report

Scenario:	TPO 2016 w/o Project AM ICU
Command:	TPO 2016 w/o Project AM ICU
Volume:	Existing+Commited AM
Geometry:	2016 Planned ICU
Impact Fee:	Default Impact Fee
Trip Generation:	None
Trip Distribution:	None
Paths:	None
Routes:	Default Route
Configuration:	2016 ICU

Newport Banning Ranch
Year 2016 without Project - TPO Analysis
AM Peak Hour

Level Of Service Computation Report
2000 HCM 4-Way Stop Method (Future Volume Alternative)

Intersection #1 Monrovia Ave/16th St

Cycle (sec):	100	Critical Vol./Cap.(X):	0.269
Loss Time (sec):	0 (Y+R=4.0 sec)	Average Delay (sec/veh):	8.8
Optimal Cycle:	0	Level Of Service:	A

Street Name:	Monrovia Avenue						16th Street					
Approach:	North Bound			South Bound			East Bound			West Bound		
Movement:	L -	T -	R	L -	T -	R	L -	T -	R	L -	T -	R
Control:	Stop Sign			Stop Sign			Stop Sign			Stop Sign		
Rights:	Include			Include			Include			Include		
Min. Green:	0	0	0	0	0	0	0	0	0	0	0	0
Lanes:	0 0	1! 0	0	0 0	1! 0	0	0 0	1! 0	0	0 0	1! 0	0
Volume Module:												
Base Vol:	4	92	54	35	104	19	9	20	10	112	44	44
Growth Adj:	1.00	1.00	1.00	1.00	1.00	1.00	1.00	1.00	1.00	1.00	1.00	1.00
Initial Bse:	4	92	54	35	104	19	9	20	10	112	44	44
Added Vol:	0	0	0	0	0	0	0	0	0	0	0	0
Committed P:	0	0	0	0	0	0	0	0	0	0	0	0
Initial Fut:	4	92	54	35	104	19	9	20	10	112	44	44
User Adj:	1.00	1.00	1.00	1.00	1.00	1.00	1.00	1.00	1.00	1.00	1.00	1.00
PHF Adj:	1.00	1.00	1.00	1.00	1.00	1.00	1.00	1.00	1.00	1.00	1.00	1.00
PHF Volume:	4	92	54	35	104	19	9	20	10	112	44	44
Reduct Vol:	0	0	0	0	0	0	0	0	0	0	0	0
Reduced Vol:	4	92	54	35	104	19	9	20	10	112	44	44
PCE Adj:	1.00	1.00	1.00	1.00	1.00	1.00	1.00	1.00	1.00	1.00	1.00	1.00
MLF Adj:	1.00	1.00	1.00	1.00	1.00	1.00	1.00	1.00	1.00	1.00	1.00	1.00
FinalVolume:	4	92	54	35	104	19	9	20	10	112	44	44
Saturation Flow Module:												
Adjustment:	1.00	1.00	1.00	1.00	1.00	1.00	1.00	1.00	1.00	1.00	1.00	1.00
Lanes:	0.03	0.61	0.36	0.22	0.66	0.12	0.23	0.51	0.26	0.56	0.22	0.22
Final Sat.:	21	475	279	166	492	90	164	364	182	417	164	164
Capacity Analysis Module:												
Vol/Sat:	0.19	0.19	0.19	0.21	0.21	0.21	0.06	0.06	0.06	0.27	0.27	0.27
Crit Moves:		****			****			****			****	
Delay/Veh:	8.4	8.4	8.4	8.8	8.8	8.8	8.0	8.0	8.0	9.2	9.2	9.2
Delay Adj:	1.00	1.00	1.00	1.00	1.00	1.00	1.00	1.00	1.00	1.00	1.00	1.00
AdjDel/Veh:	8.4	8.4	8.4	8.8	8.8	8.8	8.0	8.0	8.0	9.2	9.2	9.2
LOS by Move:	A	A	A	A	A	A	A	A	A	A	A	A
ApproachDel:		8.4			8.8			8.0			9.2	
Delay Adj:		1.00			1.00			1.00			1.00	
ApprAdjDel:		8.4			8.8			8.0			9.2	
LOS by Appr:		A			A			A			A	
AllWayAvgQ:	0.2	0.2	0.2	0.2	0.2	0.2	0.1	0.1	0.1	0.3	0.3	0.3

Newport Banning Ranch
Year 2016 without Project - TPO Analysis
AM Peak Hour

Note: Queue reported is the number of cars per lane.

Newport Banning Ranch
Year 2016 without Project - TPO Analysis
AM Peak Hour

Level Of Service Computation Report
ICU 1(Loss as Cycle Length %) Method (Future Volume Alternative)

Intersection #2 Placentia Ave/15th St

Cycle (sec):	100	Critical Vol./Cap.(X):	0.447
Loss Time (sec):	0 (Y+R=4.0 sec)	Average Delay (sec/veh):	xxxxxx
Optimal Cycle:	41	Level Of Service:	A

Street Name:	Placentia Ave						15th Street					
Approach:	North Bound			South Bound			East Bound			West Bound		
Movement:	L - T - R			L - T - R			L - T - R			L - T - R		
Control:	Prot+Permit			Prot+Permit			Split Phase			Split Phase		
Rights:	Include			Include			Include			Include		
Min. Green:	0	0	0	0	0	0	0	0	0	0	0	0
Lanes:	1 0 1	1 0		1 0 1	1 0		0 0 1!	0 0		0 1 0	0 1	
Volume Module:												
Base Vol:	131	425	15	25	431	19	57	51	174	4	22	75
Growth Adj:	1.00	1.00	1.00	1.00	1.00	1.00	1.00	1.00	1.00	1.00	1.00	1.00
Initial Bse:	131	425	15	25	431	19	57	51	174	4	22	75
Added Vol:	0	0	0	0	0	0	0	0	0	0	0	0
Committed P:	0	24	0	0	5	0	0	0	0	0	0	0
Initial Fut:	131	449	15	25	436	19	57	51	174	4	22	75
User Adj:	1.00	1.00	1.00	1.00	1.00	1.00	1.00	1.00	1.00	1.00	1.00	1.00
PHF Adj:	1.00	1.00	1.00	1.00	1.00	1.00	1.00	1.00	1.00	1.00	1.00	1.00
PHF Volume:	131	449	15	25	436	19	57	51	174	4	22	75
Reduct Vol:	0	0	0	0	0	0	0	0	0	0	0	0
Reduced Vol:	131	449	15	25	436	19	57	51	174	4	22	75
PCE Adj:	1.00	1.00	1.00	1.00	1.00	1.00	1.00	1.00	1.00	1.00	1.00	1.00
MLF Adj:	1.00	1.00	1.00	1.00	1.00	1.00	1.00	1.00	1.00	1.00	1.00	1.00
FinalVolume:	131	449	15	25	436	19	57	51	174	4	22	75
Saturation Flow Module:												
Sat/Lane:	1600	1600	1600	1600	1600	1600	1600	1600	1600	1600	1600	1600
Adjustment:	1.00	1.00	1.00	1.00	1.00	1.00	1.00	1.00	1.00	1.00	1.00	1.00
Lanes:	1.00	1.94	0.06	1.00	1.92	0.08	0.20	0.18	0.62	0.15	0.85	1.00
Final Sat.:	1600	3097	103	1600	3066	134	323	289	987	246	1354	1600
Capacity Analysis Module:												
Vol/Sat:	0.08	0.15	0.14	0.02	0.14	0.14	0.18	0.18	0.18	0.02	0.02	0.05
Crit Moves:	****				****			****				****

Newport Banning Ranch
Year 2016 without Project - TPO Analysis
AM Peak Hour

Level Of Service Computation Report
2000 HCM Unsignalized Method (Future Volume Alternative)

Intersection #3 Superior Ave/15th St

Average Delay (sec/veh): 1.7 Worst Case Level Of Service: C[20.9]

Street Name:	Superior Avenue						15th Street					
Approach:	North Bound			South Bound			East Bound			West Bound		
Movement:	L - T - R			L - T - R			L - T - R			L - T - R		
Control:	Uncontrolled			Uncontrolled			Stop Sign			Stop Sign		
Rights:	Include			Include			Include			Include		
Lanes:	1 0 2 0 0			0 0 1 1 0			1 0 0 0 1			0 0 0 0 0		
Volume Module:												
Base Vol:	77	799	0	0	328	59	64	0	21	0	0	0
Growth Adj:	1.00	1.00	1.00	1.00	1.00	1.00	1.00	1.00	1.00	1.00	1.00	1.00
Initial Bse:	77	799	0	0	328	59	64	0	21	0	0	0
Added Vol:	0	0	0	0	0	0	0	0	0	0	0	0
Committed P:	0	30	0	0	27	0	0	0	0	0	0	0
Initial Fut:	77	829	0	0	355	59	64	0	21	0	0	0
User Adj:	1.00	1.00	1.00	1.00	1.00	1.00	1.00	1.00	1.00	1.00	1.00	1.00
PHF Adj:	1.00	1.00	1.00	1.00	1.00	1.00	1.00	1.00	1.00	1.00	1.00	1.00
PHF Volume:	77	829	0	0	355	59	64	0	21	0	0	0
Reduct Vol:	0	0	0	0	0	0	0	0	0	0	0	0
FinalVolume:	77	829	0	0	355	59	64	0	21	0	0	0
Critical Gap Module:												
Critical Gp:	4.1	xxxx	xxxxx	xxxxx	xxxx	xxxxx	6.8	xxxx	6.9	xxxxx	xxxx	xxxxx
FollowUpTim:	2.2	xxxx	xxxxx	xxxxx	xxxx	xxxxx	3.5	xxxx	3.3	xxxxx	xxxx	xxxxx
Capacity Module:												
Cnflict Vol:	414	xxxx	xxxxx	xxxx	xxxx	xxxxx	953	xxxx	207	xxxx	xxxx	xxxxx
Potent Cap.:	1156	xxxx	xxxxx	xxxx	xxxx	xxxxx	261	xxxx	805	xxxx	xxxx	xxxxx
Move Cap.:	1156	xxxx	xxxxx	xxxx	xxxx	xxxxx	247	xxxx	805	xxxx	xxxx	xxxxx
Volume/Cap:	0.07	xxxx	xxxx	xxxx	xxxx	xxxx	0.26	xxxx	0.03	xxxx	xxxx	xxxx
Level Of Service Module:												
2Way95thQ:	0.2	xxxx	xxxxx	xxxx	xxxx	xxxxx	1.0	xxxx	0.1	xxxx	xxxx	xxxxx
Control Del:	8.3	xxxx	xxxxx	xxxxx	xxxx	xxxxx	24.5	xxxx	9.6	xxxxx	xxxx	xxxxx
LOS by Move:	A	*	*	*	*	*	C	*	A	*	*	*
Movement:	LT - LTR - RT			LT - LTR - RT			LT - LTR - RT			LT - LTR - RT		
Shared Cap.:	xxxx	xxxx	xxxxx	xxxx	xxxx	xxxxx	xxxx	xxxx	xxxxx	xxxx	xxxx	xxxxx
SharedQueue:	xxxxx	xxxx	xxxxx	xxxxx	xxxx	xxxxx	xxxxx	xxxx	xxxxx	xxxxx	xxxx	xxxxx
Shrd ConDel:	xxxxx	xxxx	xxxxx	xxxxx	xxxx	xxxxx	xxxxx	xxxx	xxxxx	xxxxx	xxxx	xxxxx
Shared LOS:	*	*	*	*	*	*	*	*	*	*	*	*
ApproachDel:	xxxxxx			xxxxxx			20.9			xxxxxx		
ApproachLOS:	*			*			C			*		

Note: Queue reported is the number of cars per lane.

Newport Banning Ranch
Year 2016 without Project - TPO Analysis
AM Peak Hour

Level Of Service Computation Report
ICU 1(Loss as Cycle Length %) Method (Future Volume Alternative)

Intersection #4 Superior Ave/Placentia Ave

Cycle (sec):	100	Critical Vol./Cap.(X):	0.527
Loss Time (sec):	0 (Y+R=4.0 sec)	Average Delay (sec/veh):	xxxxxx
Optimal Cycle:	39	Level Of Service:	A

Street Name:	Superior Avenue						Placentia Avenue					
Approach:	North Bound			South Bound			East Bound			West Bound		
Movement:	L - T - R			L - T - R			L - T - R			L - T - R		
Control:	Protected			Protected			Permitted			Permitted		
Rights:	Include			Include			Include			Include		
Min. Green:	0	0	0	0	0	0	0	0	0	0	0	0
Lanes:	1 0 1	1 0		1 0 1	1 0		1 0 1	0 1		0 1 0	1 0	
Volume Module:												
Base Vol:	346	803	33	57	243	9	18	325	268	8	227	61
Growth Adj:	1.00	1.00	1.00	1.00	1.00	1.00	1.00	1.00	1.00	1.00	1.00	1.00
Initial Bse:	346	803	33	57	243	9	18	325	268	8	227	61
Added Vol:	0	0	0	0	0	0	0	0	0	0	0	0
Committed P:	0	30	0	12	15	0	0	5	0	4	24	0
Initial Fut:	346	833	33	69	258	9	18	330	268	12	251	61
User Adj:	1.00	1.00	1.00	1.00	1.00	1.00	1.00	1.00	1.00	1.00	1.00	1.00
PHF Adj:	1.00	1.00	1.00	1.00	1.00	1.00	1.00	1.00	1.00	1.00	1.00	1.00
PHF Volume:	346	833	33	69	258	9	18	330	268	12	251	61
Reduct Vol:	0	0	0	0	0	0	0	0	0	0	0	0
Reduced Vol:	346	833	33	69	258	9	18	330	268	12	251	61
PCE Adj:	1.00	1.00	1.00	1.00	1.00	1.00	1.00	1.00	1.00	1.00	1.00	1.00
MLF Adj:	1.00	1.00	1.00	1.00	1.00	1.00	1.00	1.00	1.00	1.00	1.00	1.00
FinalVolume:	346	833	33	69	258	9	18	330	268	12	251	61
Saturation Flow Module:												
Sat/Lane:	1600	1600	1600	1600	1600	1600	1600	1600	1600	1600	1600	1600
Adjustment:	1.00	1.00	1.00	1.00	1.00	1.00	1.00	1.00	1.00	1.00	1.00	1.00
Lanes:	1.00	1.92	0.08	1.00	1.93	0.07	1.00	1.00	1.00	0.07	1.55	0.38
Final Sat.:	1600	3078	122	1600	3092	108	1600	1600	1600	119	2479	602
Capacity Analysis Module:												
Vol/Sat:	0.22	0.27	0.27	0.04	0.08	0.08	0.01	0.21	0.17	0.01	0.10	0.10
Crit Moves:		****		****				****		****		

Newport Banning Ranch
Year 2016 without Project - TPO Analysis
AM Peak Hour

Level Of Service Computation Report
ICU 1(Loss as Cycle Length %) Method (Future Volume Alternative)

Intersection #5 Hospital Rd/Newport Blvd

Cycle (sec):	120	Critical Vol./Cap.(X):	0.525
Loss Time (sec):	0 (Y+R=4.0 sec)	Average Delay (sec/veh):	xxxxxx
Optimal Cycle:	48	Level Of Service:	A

Street Name:	Newport Boulevard						Hospital Road					
Approach:	North Bound			South Bound			East Bound			West Bound		
Movement:	L - T - R			L - T - R			L - T - R			L - T - R		
Control:	Protected			Protected			Protected			Protected		
Rights:	Include			Include			Include			Include		
Min. Green:	0	0	0	0	0	0	0	0	0	0	0	0
Lanes:	1 0 3 0 1			1 0 3 0 1			2 0 1 0 1			1 0 1 1 0		
Volume Module:												
Base Vol:	129	1373	96	56	1066	368	197	124	199	65	224	28
Growth Adj:	1.07	1.07	1.07	1.07	1.07	1.07	1.00	1.00	1.00	1.00	1.00	1.00
Initial Bse:	138	1472	103	60	1143	394	197	124	199	65	224	28
Added Vol:	0	0	0	0	0	0	0	0	0	0	0	0
Committed P:	23	49	0	0	64	10	12	0	9	0	1	0
Initial Fut:	161	1521	103	60	1207	404	209	124	208	65	225	28
User Adj:	1.00	1.00	1.00	1.00	1.00	1.00	1.00	1.00	1.00	1.00	1.00	1.00
PHF Adj:	1.00	1.00	1.00	1.00	1.00	1.00	1.00	1.00	1.00	1.00	1.00	1.00
PHF Volume:	161	1521	103	60	1207	404	209	124	208	65	225	28
Reduct Vol:	0	0	0	0	0	0	0	0	0	0	0	0
Reduced Vol:	161	1521	103	60	1207	404	209	124	208	65	225	28
PCE Adj:	1.00	1.00	1.00	1.00	1.00	1.00	1.00	1.00	1.00	1.00	1.00	1.00
MLF Adj:	1.00	1.00	1.00	1.00	1.00	1.00	1.00	1.00	1.00	1.00	1.00	1.00
FinalVolume:	161	1521	103	60	1207	404	209	124	208	65	225	28
Saturation Flow Module:												
Sat/Lane:	1600	1600	1600	1600	1600	1600	1600	1600	1600	1600	1600	1600
Adjustment:	1.00	1.00	1.00	1.00	1.00	1.00	1.00	1.00	1.00	1.00	1.00	1.00
Lanes:	1.00	3.00	1.00	1.00	3.00	1.00	2.00	1.00	1.00	1.00	1.78	0.22
Final Sat.:	1600	4800	1600	1600	4800	1600	3200	1600	1600	1600	2846	354
Capacity Analysis Module:												
Vol/Sat:	0.10	0.32	0.06	0.04	0.25	0.25	0.07	0.08	0.13	0.04	0.08	0.08
Crit Moves:		****		****					****	****		

Newport Banning Ranch
Year 2016 without Project - TPO Analysis
AM Peak Hour

Level Of Service Computation Report
ICU 1(Loss as Cycle Length %) Method (Future Volume Alternative)

Intersection #6 Orange St/W. Coast Hwy

Cycle (sec):	120	Critical Vol./Cap.(X):	0.792
Loss Time (sec):	0 (Y+R=4.0 sec)	Average Delay (sec/veh):	xxxxxx
Optimal Cycle:	89	Level Of Service:	C

Street Name:	Orange Street						W. Coast Highway					
Approach:	North Bound			South Bound			East Bound			West Bound		
Movement:	L - T - R			L - T - R			L - T - R			L - T - R		
Control:	Permitted			Permitted			Protected			Protected		
Rights:	Include			Include			Include			Include		
Min. Green:	0	0	0	0	0	0	0	0	0	0	0	0
Lanes:	0 1	0 0	1	0 1	0 0	1	1 0	2 1	0	1 0	3 0	1
Volume Module:												
Base Vol:	49	1	70	40	2	19	11	3095	10	43	870	17
Growth Adj:	1.00	1.00	1.00	1.00	1.00	1.00	1.07	1.07	1.07	1.07	1.07	1.07
Initial Bse:	49	1	70	40	2	19	12	3318	11	46	933	18
Added Vol:	0	0	0	0	0	0	0	0	0	0	0	0
Committed P:	0	0	0	0	0	0	0	62	0	0	37	0
Initial Fut:	49	1	70	40	2	19	12	3380	11	46	970	18
User Adj:	1.00	1.00	1.00	1.00	1.00	1.00	1.00	1.00	1.00	1.00	1.00	1.00
PHF Adj:	1.00	1.00	1.00	1.00	1.00	1.00	1.00	1.00	1.00	1.00	1.00	1.00
PHF Volume:	49	1	70	40	2	19	12	3380	11	46	970	18
Reduct Vol:	0	0	0	0	0	0	0	0	0	0	0	0
Reduced Vol:	49	1	70	40	2	19	12	3380	11	46	970	18
PCE Adj:	1.00	1.00	1.00	1.00	1.00	1.00	1.00	1.00	1.00	1.00	1.00	1.00
MLF Adj:	1.00	1.00	1.00	1.00	1.00	1.00	1.00	1.00	1.00	1.00	1.00	1.00
FinalVolume:	49	1	70	40	2	19	12	3380	11	46	970	18
Saturation Flow Module:												
Sat/Lane:	1600	1600	1600	1600	1600	1600	1600	1600	1600	1600	1600	1600
Adjustment:	1.00	1.00	1.00	1.00	1.00	1.00	1.00	1.00	1.00	1.00	1.00	1.00
Lanes:	0.98	0.02	1.00	0.95	0.05	1.00	1.00	2.99	0.01	1.00	3.00	1.00
Final Sat.:	1568	32	1600	1524	76	1600	1600	4785	15	1600	4800	1600
Capacity Analysis Module:												
Vol/Sat:	0.03	0.03	0.04	0.03	0.03	0.01	0.01	0.71	0.71	0.03	0.20	0.01
Crit Moves:	****				****			****		****		

Newport Banning Ranch
Year 2016 without Project - TPO Analysis
AM Peak Hour

Level Of Service Computation Report
ICU 1(Loss as Cycle Length %) Method (Future Volume Alternative)

Intersection #7 Prospect St/W. Coast Hwy

Cycle (sec):	120	Critical Vol./Cap.(X):	0.775
Loss Time (sec):	0 (Y+R=4.0 sec)	Average Delay (sec/veh):	xxxxxx
Optimal Cycle:	83	Level Of Service:	C

Street Name:	Prospect Street						W. Coast Highway					
Approach:	North Bound			South Bound			East Bound			West Bound		
Movement:	L - T - R			L - T - R			L - T - R			L - T - R		
Control:	Permitted			Permitted			Protected			Protected		
Rights:	Include			Include			Include			Include		
Min. Green:	0	0	0	0	0	0	0	0	0	0	0	0
Lanes:	0 1 0	0 1		0 0 1!	0 0		1 0 2	1 0		1 0 2	1 0	
Volume Module:												
Base Vol:	19	0	33	267	0	7	17	2490	5	26	1112	34
Growth Adj:	1.00	1.00	1.00	1.00	1.00	1.00	1.07	1.07	1.07	1.07	1.07	1.07
Initial Bse:	19	0	33	267	0	7	18	2669	5	28	1192	36
Added Vol:	0	0	0	0	0	0	0	0	0	0	0	0
Committed P:	0	0	0	0	0	0	0	62	0	0	37	0
Initial Fut:	19	0	33	267	0	7	18	2731	5	28	1229	36
User Adj:	1.00	1.00	1.00	1.00	1.00	1.00	1.00	1.00	1.00	1.00	1.00	1.00
PHF Adj:	1.00	1.00	1.00	1.00	1.00	1.00	1.00	1.00	1.00	1.00	1.00	1.00
PHF Volume:	19	0	33	267	0	7	18	2731	5	28	1229	36
Reduct Vol:	0	0	0	0	0	0	0	0	0	0	0	0
Reduced Vol:	19	0	33	267	0	7	18	2731	5	28	1229	36
PCE Adj:	1.00	1.00	1.00	1.00	1.00	1.00	1.00	1.00	1.00	1.00	1.00	1.00
MLF Adj:	1.00	1.00	1.00	1.00	1.00	1.00	1.00	1.00	1.00	1.00	1.00	1.00
FinalVolume:	19	0	33	267	0	7	18	2731	5	28	1229	36
Saturation Flow Module:												
Sat/Lane:	1600	1600	1600	1600	1600	1600	1600	1600	1600	1600	1600	1600
Adjustment:	1.00	1.00	1.00	1.00	1.00	1.00	1.00	1.00	1.00	1.00	1.00	1.00
Lanes:	1.00	0.00	1.00	0.97	0.00	0.03	1.00	2.99	0.01	1.00	2.91	0.09
Final Sat.:	1600	0	1600	1559	0	41	1600	4791	9	1600	4662	138
Capacity Analysis Module:												
Vol/Sat:	0.01	0.00	0.02	0.17	0.00	0.17	0.01	0.57	0.57	0.02	0.26	0.26
Crit Moves:			****	****				****		****		

Newport Banning Ranch
Year 2016 without Project - TPO Analysis
AM Peak Hour

Level Of Service Computation Report
ICU 1(Loss as Cycle Length %) Method (Future Volume Alternative)

Intersection #8 W. Coast Hwy/Superior Ave

Cycle (sec):	120	Critical Vol./Cap.(X):	0.695
Loss Time (sec):	0 (Y+R=4.0 sec)	Average Delay (sec/veh):	xxxxxx
Optimal Cycle:	75	Level Of Service:	B

Street Name:	Superior Avenue						W. Coast Highway					
Approach:	North Bound			South Bound			East Bound			West Bound		
Movement:	L - T - R			L - T - R			L - T - R			L - T - R		
Control:	Split Phase			Split Phase			Protected			Protected		
Rights:	Include			Ovl			Include			Include		
Min. Green:	0	0	0	0	0	0	0	0	0	0	0	0
Lanes:	1 1	0 1	0	1 1	1 0	2	2 0	3 0	1	1 0	3 1	0
Volume Module:												
Base Vol:	168	266	114	170	165	247	709	1914	211	95	768	155
Growth Adj:	1.00	1.00	1.00	1.00	1.00	1.00	1.07	1.07	1.07	1.07	1.07	1.07
Initial Bse:	168	266	114	170	165	247	760	2052	226	102	823	166
Added Vol:	0	0	0	0	0	0	0	0	0	0	0	0
Committed P:	1	6	0	0	3	12	24	49	0	0	42	0
Initial Fut:	169	272	114	170	168	259	784	2101	226	102	865	166
User Adj:	1.00	1.00	1.00	1.00	1.00	1.00	1.00	1.00	1.00	1.00	1.00	1.00
PHF Adj:	1.00	1.00	1.00	1.00	1.00	1.00	1.00	1.00	1.00	1.00	1.00	1.00
PHF Volume:	169	272	114	170	168	259	784	2101	226	102	865	166
Reduct Vol:	0	0	0	0	0	0	0	0	0	0	0	0
Reduced Vol:	169	272	114	170	168	259	784	2101	226	102	865	166
PCE Adj:	1.00	1.00	1.00	1.00	1.00	1.00	1.00	1.00	1.00	1.00	1.00	1.00
MLF Adj:	1.00	1.00	1.00	1.00	1.00	1.00	1.00	1.00	1.00	1.00	1.00	1.00
FinalVolume:	169	272	114	170	168	259	784	2101	226	102	865	166
OvlAdjVol:						0						
Saturation Flow Module:												
Sat/Lane:	1600	1600	1600	1600	1600	1600	1600	1600	1600	1600	1600	1600
Adjustment:	1.00	1.00	1.00	1.00	1.00	1.00	1.00	1.00	1.00	1.00	1.00	1.00
Lanes:	1.00	1.38	0.62	1.51	1.49	2.00	2.00	3.00	1.00	1.00	3.36	0.64
Final Sat.:	1600	2213	987	2414	2386	3200	3200	4800	1600	1600	5369	1031
Capacity Analysis Module:												
Vol/Sat:	0.11	0.12	0.12	0.07	0.07	0.08	0.25	0.44	0.14	0.06	0.16	0.16
OvlAdjV/S:						0.00						
Crit Moves:		****		****				****		****		

Newport Banning Ranch
Year 2016 without Project - TPO Analysis
AM Peak Hour

Level Of Service Computation Report
ICU 1(Loss as Cycle Length %) Method (Future Volume Alternative)

Intersection #9 Newport Blvd/W. Coast Hwy

Cycle (sec):	120	Critical Vol./Cap.(X):	0.903
Loss Time (sec):	0 (Y+R=4.0 sec)	Average Delay (sec/veh):	xxxxxx
Optimal Cycle:	180	Level Of Service:	E

Street Name:	Newport Boulevard						W. Coast Highway					
Approach:	North Bound			South Bound			East Bound			West Bound		
Movement:	L - T - R			L - T - R			L - T - R			L - T - R		
Control:	Protected			Protected			Protected			Protected		
Rights:	Include			Include			Ignore			Ignore		
Min. Green:	0	0	0	0	0	0	0	0	0	0	0	0
Lanes:	0 0 0 0 0			2 0 0 0 1			0 0 2 0 1			0 0 3 0 1		
Volume Module:												
Base Vol:	0	0	0	383	0	288	0	2082	188	0	812	349
Growth Adj:	1.00	1.00	1.00	1.00	1.00	1.00	1.00	1.07	1.07	1.00	1.07	1.07
Initial Bse:	0	0	0	383	0	288	0	2232	202	0	870	374
Added Vol:	0	0	0	0	0	0	0	0	0	0	0	0
Committed P:	0	0	0	17	0	35	0	12	4	0	42	0
Initial Fut:	0	0	0	400	0	323	0	2244	206	0	912	374
User Adj:	1.00	1.00	1.00	1.00	1.00	1.00	1.00	1.00	0.00	1.00	1.00	0.00
PHF Adj:	1.00	1.00	1.00	1.00	1.00	1.00	1.00	1.00	0.00	1.00	1.00	0.00
PHF Volume:	0	0	0	400	0	323	0	2244	0	0	912	0
Reduct Vol:	0	0	0	0	0	0	0	0	0	0	0	0
Reduced Vol:	0	0	0	400	0	323	0	2244	0	0	912	0
PCE Adj:	1.00	1.00	1.00	1.00	1.00	1.00	1.00	1.00	0.00	1.00	1.00	0.00
MLF Adj:	1.00	1.00	1.00	1.00	1.00	1.00	1.00	1.00	0.00	1.00	1.00	0.00
FinalVolume:	0	0	0	400	0	323	0	2244	0	0	912	0
Saturation Flow Module:												
Sat/Lane:	1600	1600	1600	1600	1600	1600	1600	1600	1600	1600	1600	1600
Adjustment:	1.00	1.00	1.00	1.00	1.00	1.00	1.00	1.00	1.00	1.00	1.00	1.00
Lanes:	0.00	0.00	0.00	2.00	0.00	1.00	0.00	2.00	1.00	0.00	3.00	1.00
Final Sat.:	0	0	0	3200	0	1600	0	3200	1600	0	4800	1600
Capacity Analysis Module:												
Vol/Sat:	0.00	0.00	0.00	0.13	0.00	0.20	0.00	0.70	0.00	0.00	0.19	0.00
Crit Moves:						****		****		****		

Newport Banning Ranch
Year 2016 without Project - TPO Analysis
AM Peak Hour

Level Of Service Computation Report
ICU 1(Loss as Cycle Length %) Method (Future Volume Alternative)

Intersection #10 Riverside Ave/W. Coast Hwy

Cycle (sec):	120	Critical Vol./Cap.(X):	0.728
Loss Time (sec):	0 (Y+R=4.0 sec)	Average Delay (sec/veh):	xxxxxx
Optimal Cycle:	68	Level Of Service:	C

Street Name:	Riverside Avenue						W. Coast Highway					
Approach:	North Bound			South Bound			East Bound			West Bound		
Movement:	L - T - R			L - T - R			L - T - R			L - T - R		
Control:	Permitted			Permitted			Protected			Protected		
Rights:	Include			Ovl			Include			Include		
Min. Green:	0	0	0	0	0	0	0	0	0	0	0	0
Lanes:	0 0 0 0 1			0 1 0 0 1			1 0 1 1 0			1 0 3 0 1		
Volume Module:												
Base Vol:	0	0	1	77	4	304	312	1893	4	17	1124	67
Growth Adj:	1.00	1.00	1.00	1.00	1.00	1.00	1.07	1.07	1.07	1.07	1.07	1.07
Initial Bse:	0	0	1	77	4	304	334	2029	4	18	1205	72
Added Vol:	0	0	0	0	0	0	0	0	0	0	0	0
Committed P:	0	0	0	2	0	0	0	103	0	0	92	1
Initial Fut:	0	0	1	79	4	304	334	2132	4	18	1297	73
User Adj:	1.00	1.00	1.00	1.00	1.00	1.00	1.00	1.00	1.00	1.00	1.00	1.00
PHF Adj:	1.00	1.00	1.00	1.00	1.00	1.00	1.00	1.00	1.00	1.00	1.00	1.00
PHF Volume:	0	0	1	79	4	304	334	2132	4	18	1297	73
Reduct Vol:	0	0	0	0	0	0	0	0	0	0	0	0
Reduced Vol:	0	0	1	79	4	304	334	2132	4	18	1297	73
PCE Adj:	1.00	1.00	1.00	1.00	1.00	1.00	1.00	1.00	1.00	1.00	1.00	1.00
MLF Adj:	1.00	1.00	1.00	1.00	1.00	1.00	1.00	1.00	1.00	1.00	1.00	1.00
FinalVolume:	0	0	1	79	4	304	334	2132	4	18	1297	73
OvlAdjVol:						0						
Saturation Flow Module:												
Sat/Lane:	1600	1600	1600	1600	1600	1600	1600	1600	1600	1600	1600	1600
Adjustment:	1.00	1.00	1.00	1.00	1.00	1.00	1.00	1.00	1.00	1.00	1.00	1.00
Lanes:	0.00	0.00	1.00	0.95	0.05	1.00	1.00	1.99	0.01	1.00	3.00	1.00
Final Sat.:	0	0	1600	1523	77	1600	1600	3194	6	1600	4800	1600
Capacity Analysis Module:												
Vol/Sat:	0.00	0.00	0.00	0.05	0.05	0.19	0.21	0.67	0.67	0.01	0.27	0.05
OvlAdjV/S:						0.00						
Crit Moves:	****			****				****		****		

Newport Banning Ranch
Year 2016 without Project - TPO Analysis
AM Peak Hour

Level Of Service Computation Report
ICU 1(Loss as Cycle Length %) Method (Future Volume Alternative)

Intersection #11 Tustin Ave/W. Coast Hwy

Cycle (sec):	120	Critical Vol./Cap.(X):	0.731
Loss Time (sec):	0 (Y+R=4.0 sec)	Average Delay (sec/veh):	xxxxxx
Optimal Cycle:	180	Level Of Service:	C

Street Name:	Tustin Avenue						W. Coast Highway					
Approach:	North Bound			South Bound			East Bound			West Bound		
Movement:	L - T - R			L - T - R			L - T - R			L - T - R		
Control:	Permitted			Permitted			Protected			Permitted		
Rights:	Include			Include			Include			Include		
Min. Green:	0	0	0	0	0	0	0	0	0	0	0	0
Lanes:	0 0	1! 0	0	0 0	1! 0	0	1 0	1 1	0	0 0	3 0	1
Volume Module:												
Base Vol:	0	0	0	33	1	14	42	1992	1	0	1220	35
Growth Adj:	1.00	1.00	1.00	1.00	1.00	1.00	1.07	1.07	1.07	1.07	1.07	1.07
Initial Bse:	0	0	0	33	1	14	45	2135	1	0	1308	38
Added Vol:	0	0	0	0	0	0	0	0	0	0	0	0
Committed P:	0	0	0	0	0	0	0	108	0	0	93	0
Initial Fut:	0	0	0	33	1	14	45	2243	1	0	1401	38
User Adj:	1.00	1.00	1.00	1.00	1.00	1.00	1.00	1.00	1.00	1.00	1.00	1.00
PHF Adj:	1.00	1.00	1.00	1.00	1.00	1.00	1.00	1.00	1.00	1.00	1.00	1.00
PHF Volume:	0	0	0	33	1	14	45	2243	1	0	1401	38
Reduct Vol:	0	0	0	0	0	0	0	0	0	0	0	0
Reduced Vol:	0	0	0	33	1	14	45	2243	1	0	1401	38
PCE Adj:	1.00	1.00	1.00	1.00	1.00	1.00	1.00	1.00	1.00	1.00	1.00	1.00
MLF Adj:	1.00	1.00	1.00	1.00	1.00	1.00	1.00	1.00	1.00	1.00	1.00	1.00
FinalVolume:	0	0	0	33	1	14	45	2243	1	0	1401	38
Saturation Flow Module:												
Sat/Lane:	1600	1600	1600	1600	1600	1600	1600	1600	1600	1600	1600	1600
Adjustment:	1.00	1.00	1.00	1.00	1.00	1.00	1.00	1.00	1.00	1.00	1.00	1.00
Lanes:	0.00	1.00	0.00	0.69	0.02	0.29	1.00	1.99	0.01	0.00	3.00	1.00
Final Sat.:	0	1600	0	1100	33	467	1600	3198	2	0	4800	1600
Capacity Analysis Module:												
Vol/Sat:	0.00	0.00	0.00	0.02	0.03	0.03	0.03	0.70	0.70	0.00	0.29	0.02
Crit Moves:					****			****				

Newport Banning Ranch
Year 2016 without Project - TPO Analysis
AM Peak Hour

Level Of Service Computation Report
ICU 1(Loss as Cycle Length %) Method (Future Volume Alternative)

Intersection #12 Dover Dr/W. Coast Hwy

Cycle (sec):	120	Critical Vol./Cap.(X):	0.685
Loss Time (sec):	0 (Y+R=4.0 sec)	Average Delay (sec/veh):	xxxxxx
Optimal Cycle:	72	Level Of Service:	B

Street Name:	Dover Drive						W. Coast Highway					
Approach:	North Bound			South Bound			East Bound			West Bound		
Movement:	L - T - R			L - T - R			L - T - R			L - T - R		
Control:	Split Phase			Split Phase			Protected			Protected		
Rights:	Include			Include			Include			Ignore		
Min. Green:	0	0	0	0	0	0	0	0	0	0	0	0
Lanes:	1 0 1	1 0		3 0 1	0 1		2 0 2	1 0		1 0 3	0 1	
Volume Module:												
Base Vol:	16	61	29	840	51	108	117	1912	25	42	1212	469
Growth Adj:	1.00	1.00	1.00	1.00	1.00	1.00	1.07	1.07	1.07	1.07	1.07	1.07
Initial Bse:	16	61	29	840	51	108	125	2050	27	45	1299	503
Added Vol:	0	0	0	0	0	0	0	0	0	0	0	0
Committed P:	0	0	0	9	0	18	10	93	0	0	91	7
Initial Fut:	16	61	29	849	51	126	135	2143	27	45	1390	510
User Adj:	1.00	1.00	1.00	1.00	1.00	1.00	1.00	1.00	1.00	1.00	1.00	0.00
PHF Adj:	1.00	1.00	1.00	1.00	1.00	1.00	1.00	1.00	1.00	1.00	1.00	0.00
PHF Volume:	16	61	29	849	51	126	135	2143	27	45	1390	0
Reduct Vol:	0	0	0	0	0	0	0	0	0	0	0	0
Reduced Vol:	16	61	29	849	51	126	135	2143	27	45	1390	0
PCE Adj:	1.00	1.00	1.00	1.00	1.00	1.00	1.00	1.00	1.00	1.00	1.00	0.00
MLF Adj:	1.00	1.00	1.00	1.00	1.00	1.00	1.00	1.00	1.00	1.00	1.00	0.00
FinalVolume:	16	61	29	849	51	126	135	2143	27	45	1390	0
Saturation Flow Module:												
Sat/Lane:	1600	1600	1600	1600	1600	1600	1600	1600	1600	1600	1600	1600
Adjustment:	1.00	1.00	1.00	1.00	1.00	1.00	1.00	1.00	1.00	1.00	1.00	1.00
Lanes:	1.00	1.36	0.64	3.00	1.00	1.00	2.00	2.96	0.04	1.00	3.00	1.00
Final Sat.:	1600	2169	1031	4800	1600	1600	3200	4741	59	1600	4800	1600
Capacity Analysis Module:												
Vol/Sat:	0.01	0.03	0.03	0.18	0.03	0.08	0.04	0.45	0.45	0.03	0.29	0.00
Crit Moves:			****	****				****		****		

Newport Banning Ranch
Year 2016 without Project - TPO Analysis
AM Peak Hour

Level Of Service Computation Report
ICU 1(Loss as Cycle Length %) Method (Future Volume Alternative)

Intersection #13 Magnolia St/Hamilton Ave

Cycle (sec):	100	Critical Vol./Cap.(X):	0.571
Loss Time (sec):	5 (Y+R=4.0 sec)	Average Delay (sec/veh):	xxxxxx
Optimal Cycle:	27	Level Of Service:	A

Street Name:	Magnolia Street						Hamilton Avenue					
Approach:	North Bound			South Bound			East Bound			West Bound		
Movement:	L - T - R			L - T - R			L - T - R			L - T - R		
Control:	Prot+Permit			Prot+Permit			Permitted			Permitted		
Rights:	Include			Include			Include			Include		
Min. Green:	0	0	0	0	0	0	0	0	0	0	0	0
Lanes:	1 0 1	1 0		1 0 2	0 1		1 0 0	1 0		1 0 1	0 1	
Volume Module:												
Base Vol:	56	241	42	197	303	35	67	273	145	66	172	368
Growth Adj:	1.07	1.07	1.07	1.07	1.07	1.07	1.07	1.07	1.07	1.07	1.07	1.07
Initial Bse:	60	258	45	211	325	38	72	293	155	71	184	394
Added Vol:	0	0	0	0	0	0	0	0	0	0	0	0
Committed P:	2	3	0	0	6	0	0	0	3	0	0	0
Initial Fut:	62	261	45	211	331	38	72	293	158	71	184	394
User Adj:	1.00	1.00	1.00	1.00	1.00	1.00	1.00	1.00	1.00	1.00	1.00	1.00
PHF Adj:	1.00	1.00	1.00	1.00	1.00	1.00	1.00	1.00	1.00	1.00	1.00	1.00
PHF Volume:	62	261	45	211	331	38	72	293	158	71	184	394
Reduct Vol:	0	0	0	0	0	0	0	0	0	0	0	0
Reduced Vol:	62	261	45	211	331	38	72	293	158	71	184	394
PCE Adj:	1.00	1.00	1.00	1.00	1.00	1.00	1.00	1.00	1.00	1.00	1.00	1.00
MLF Adj:	1.00	1.00	1.00	1.00	1.00	1.00	1.00	1.00	1.00	1.00	1.00	1.00
FinalVolume:	62	261	45	211	331	38	72	293	158	71	184	394
Saturation Flow Module:												
Sat/Lane:	1600	1600	1600	1600	1600	1600	1600	1600	1600	1600	1600	1600
Adjustment:	1.06	1.06	1.06	1.06	1.06	1.06	1.06	1.06	1.06	1.06	1.06	1.06
Lanes:	1.00	1.71	0.29	1.00	2.00	1.00	1.00	0.65	0.35	1.00	1.00	1.00
Final Sat.:	1700	2900	500	1700	3400	1700	1700	1103	597	1700	1700	1700
Capacity Analysis Module:												
Vol/Sat:	0.04	0.09	0.09	0.12	0.10	0.02	0.04	0.27	0.27	0.04	0.11	0.23
Crit Moves:		****		****				****		****		

Newport Banning Ranch
Year 2016 without Project - TPO Analysis
AM Peak Hour

Level Of Service Computation Report
ICU 1(Loss as Cycle Length %) Method (Future Volume Alternative)

Intersection #14 Bushard St/Hamilton Ave

Cycle (sec):	100	Critical Vol./Cap.(X):	0.449
Loss Time (sec):	5 (Y+R=4.0 sec)	Average Delay (sec/veh):	xxxxxx
Optimal Cycle:	22	Level Of Service:	A

Street Name:	Bushard Street						Hamilton Avenue					
Approach:	North Bound			South Bound			East Bound			West Bound		
Movement:	L - T - R			L - T - R			L - T - R			L - T - R		
Control:	Permitted			Permitted			Permitted			Permitted		
Rights:	Include			Include			Include			Include		
Min. Green:	0	0	0	0	0	0	0	0	0	0	0	0
Lanes:	1 0 1	1 0		1 0 1	1 0		1 0 1	1 0		1 0 1	1 0	
Volume Module:												
Base Vol:	66	176	51	188	297	145	59	526	33	52	409	94
Growth Adj:	1.07	1.07	1.07	1.07	1.07	1.07	1.07	1.07	1.07	1.07	1.07	1.07
Initial Bse:	71	189	55	202	318	155	63	564	35	56	438	101
Added Vol:	0	0	0	0	0	0	0	0	0	0	0	0
Committed P:	0	0	0	0	0	0	0	0	0	0	0	0
Initial Fut:	71	189	55	202	318	155	63	564	35	56	438	101
User Adj:	1.00	1.00	1.00	1.00	1.00	1.00	1.00	1.00	1.00	1.00	1.00	1.00
PHF Adj:	1.00	1.00	1.00	1.00	1.00	1.00	1.00	1.00	1.00	1.00	1.00	1.00
PHF Volume:	71	189	55	202	318	155	63	564	35	56	438	101
Reduct Vol:	0	0	0	0	0	0	0	0	0	0	0	0
Reduced Vol:	71	189	55	202	318	155	63	564	35	56	438	101
PCE Adj:	1.00	1.00	1.00	1.00	1.00	1.00	1.00	1.00	1.00	1.00	1.00	1.00
MLF Adj:	1.00	1.00	1.00	1.00	1.00	1.00	1.00	1.00	1.00	1.00	1.00	1.00
FinalVolume:	71	189	55	202	318	155	63	564	35	56	438	101
Saturation Flow Module:												
Sat/Lane:	1600	1600	1600	1600	1600	1600	1600	1600	1600	1600	1600	1600
Adjustment:	1.06	1.06	1.06	1.06	1.06	1.06	1.06	1.06	1.06	1.06	1.06	1.06
Lanes:	1.00	1.55	0.45	1.00	1.34	0.66	1.00	1.88	0.12	1.00	1.63	0.37
Final Sat.:	1700	2636	764	1700	2285	1115	1700	3199	201	1700	2765	635
Capacity Analysis Module:												
Vol/Sat:	0.04	0.07	0.07	0.12	0.14	0.14	0.04	0.18	0.18	0.03	0.16	0.16
Crit Moves:		****		****				****		****		

Newport Banning Ranch
Year 2016 without Project - TPO Analysis
AM Peak Hour

Level Of Service Computation Report
ICU 1(Loss as Cycle Length %) Method (Future Volume Alternative)

Intersection #15 Brookhurst St/Hamilton Ave (Victoria St)

Cycle (sec):	100	Critical Vol./Cap.(X):	0.719
Loss Time (sec):	5 (Y+R=4.0 sec)	Average Delay (sec/veh):	xxxxxx
Optimal Cycle:	39	Level Of Service:	C

Street Name:	Brookhurst						Hamilton Avenue (Victoria Street)					
Approach:	North Bound			South Bound			East Bound			West Bound		
Movement:	L - T - R			L - T - R			L - T - R			L - T - R		
Control:	Protected			Protected			Prot+Permit			Prot+Permit		
Rights:	Include			Include			Include			Include		
Min. Green:	0	0	0	0	0	0	0	0	0	0	0	0
Lanes:	1 0 3 0 1			2 0 2 1 0			1 0 1 1 0			1 0 2 0 1		
Volume Module:												
Base Vol:	59	289	321	501	483	110	95	683	47	124	348	277
Growth Adj:	1.07	1.07	1.07	1.07	1.07	1.07	1.07	1.07	1.07	1.07	1.07	1.07
Initial Bse:	63	310	344	537	518	118	102	732	50	133	373	297
Added Vol:	0	0	0	0	0	0	0	0	0	0	0	0
Committed P:	0	1	0	0	3	0	0	0	0	0	0	0
Initial Fut:	63	311	344	537	521	118	102	732	50	133	373	297
User Adj:	1.00	1.00	1.00	1.00	1.00	1.00	1.00	1.00	1.00	1.00	1.00	1.00
PHF Adj:	1.00	1.00	1.00	1.00	1.00	1.00	1.00	1.00	1.00	1.00	1.00	1.00
PHF Volume:	63	311	344	537	521	118	102	732	50	133	373	297
Reduct Vol:	0	0	0	0	0	0	0	0	0	0	0	0
Reduced Vol:	63	311	344	537	521	118	102	732	50	133	373	297
PCE Adj:	1.00	1.00	1.00	1.00	1.00	1.00	1.00	1.00	1.00	1.00	1.00	1.00
MLF Adj:	1.00	1.00	1.00	1.00	1.00	1.00	1.00	1.00	1.00	1.00	1.00	1.00
FinalVolume:	63	311	344	537	521	118	102	732	50	133	373	297
Saturation Flow Module:												
Sat/Lane:	1600	1600	1600	1600	1600	1600	1600	1600	1600	1600	1600	1600
Adjustment:	1.06	1.06	1.06	1.06	1.06	1.06	1.06	1.06	1.06	1.06	1.06	1.06
Lanes:	1.00	3.00	1.00	2.00	2.45	0.55	1.00	1.87	0.13	1.00	2.00	1.00
Final Sat.:	1700	5100	1700	3400	4158	942	1700	3181	219	1700	3400	1700
Capacity Analysis Module:												
Vol/Sat:	0.04	0.06	0.20	0.16	0.13	0.13	0.06	0.23	0.23	0.08	0.11	0.17
Crit Moves:			****	****				****		****		

Newport Banning Ranch
Year 2016 without Project - TPO Analysis
AM Peak Hour

Level Of Service Computation Report
ICU 1(Loss as Cycle Length %) Method (Future Volume Alternative)

Intersection #16 Magnolia St/Banning Ave

Cycle (sec):	100	Critical Vol./Cap.(X):	0.248
Loss Time (sec):	5 (Y+R=4.0 sec)	Average Delay (sec/veh):	xxxxxx
Optimal Cycle:	16	Level Of Service:	A

Street Name:	Magnolia Street									Banning Avenue								
Approach:	North Bound					South Bound				East Bound					West Bound			
Movement:	L	-	T	-	R	L	-	T	- R	L	-	T	-	R	L	-	T	- R
Control:	Protected					Protected				Split Phase					Split Phase			
Rights:	Include					Include				Include					Include			
Min. Green:	0	0	0			0	0	0		0	0	0			0	0	0	
Lanes:	0	0	1	1	0	1	0	2	0 0	0	0	0	0	0	2	0	0	0 1
Volume Module:																		
Base Vol:	0	197	37			82	376	0		0	0	0			62	0	112	
Growth Adj:	1.07	1.07	1.07			1.07	1.07	1.07		1.07	1.07	1.07			1.07	1.07	1.07	
Initial Bse:	0	211	40			88	403	0		0	0	0			66	0	120	
Added Vol:	0	0	0			0	0	0		0	0	0			0	0	0	
Committed P:	0	7	0			0	12	0		0	0	0			0	0	0	
Initial Fut:	0	218	40			88	415	0		0	0	0			66	0	120	
User Adj:	1.00	1.00	1.00			1.00	1.00	1.00		1.00	1.00	1.00			1.00	1.00	1.00	
PHF Adj:	1.00	1.00	1.00			1.00	1.00	1.00		1.00	1.00	1.00			1.00	1.00	1.00	
PHF Volume:	0	218	40			88	415	0		0	0	0			66	0	120	
Reduct Vol:	0	0	0			0	0	0		0	0	0			0	0	0	
Reduced Vol:	0	218	40			88	415	0		0	0	0			66	0	120	
PCE Adj:	1.00	1.00	1.00			1.00	1.00	1.00		1.00	1.00	1.00			1.00	1.00	1.00	
MLF Adj:	1.00	1.00	1.00			1.00	1.00	1.00		1.00	1.00	1.00			1.00	1.00	1.00	
FinalVolume:	0	218	40			88	415	0		0	0	0			66	0	120	
Saturation Flow Module:																		
Sat/Lane:	1600	1600	1600			1600	1600	1600		1600	1600	1600			1600	1600	1600	
Adjustment:	1.06	1.06	1.06			1.06	1.06	1.06		1.06	1.06	1.06			1.06	1.06	1.06	
Lanes:	0.00	1.69	0.31			1.00	2.00	0.00		0.00	0.00	0.00			2.00	0.00	1.00	
Final Sat.:	0	2877	523			1700	3400	0		0	0	0			3400	0	1700	
Capacity Analysis Module:																		
Vol/Sat:	0.00	0.08	0.08			0.05	0.12	0.00		0.00	0.00	0.00			0.02	0.00	0.07	
Crit Moves:		****				****											****	

Newport Banning Ranch
Year 2016 without Project - TPO Analysis
AM Peak Hour

Level Of Service Computation Report
2000 HCM 4-Way Stop Method (Future Volume Alternative)

Intersection #17 Bushard St/Banning Ave

Cycle (sec):	100	Critical Vol./Cap.(X):	0.304
Loss Time (sec):	5 (Y+R=4.0 sec)	Average Delay (sec/veh):	10.2
Optimal Cycle:	0	Level Of Service:	B

Street Name:	Bushard Street						Banning Avenue					
Approach:	North Bound			South Bound			East Bound			West Bound		
Movement:	L - T - R			L - T - R			L - T - R			L - T - R		
Control:	Stop Sign			Stop Sign			Stop Sign			Stop Sign		
Rights:	Include			Include			Include			Include		
Min. Green:	0	0	0	0	0	0	0	0	0	0	0	0
Lanes:	1 0 1	1 0		1 0 1	1 0		1 0 0	1 0		1 0 0	1 0	
Volume Module:												
Base Vol:	14	86	15	16	220	121	53	84	28	7	114	19
Growth Adj:	1.07	1.07	1.07	1.07	1.07	1.07	1.07	1.07	1.07	1.07	1.07	1.07
Initial Bse:	15	92	16	17	236	130	57	90	30	8	122	20
Added Vol:	0	0	0	0	0	0	0	0	0	0	0	0
Committed P:	0	0	0	0	3	0	0	0	0	0	0	0
Initial Fut:	15	92	16	17	239	130	57	90	30	8	122	20
User Adj:	1.00	1.00	1.00	1.00	1.00	1.00	1.00	1.00	1.00	1.00	1.00	1.00
PHF Adj:	1.00	1.00	1.00	1.00	1.00	1.00	1.00	1.00	1.00	1.00	1.00	1.00
PHF Volume:	15	92	16	17	239	130	57	90	30	8	122	20
Reduct Vol:	0	0	0	0	0	0	0	0	0	0	0	0
Reduced Vol:	15	92	16	17	239	130	57	90	30	8	122	20
PCE Adj:	1.00	1.00	1.00	1.00	1.00	1.00	1.00	1.00	1.00	1.00	1.00	1.00
MLF Adj:	1.00	1.00	1.00	1.00	1.00	1.00	1.00	1.00	1.00	1.00	1.00	1.00
FinalVolume:	15	92	16	17	239	130	57	90	30	8	122	20
Saturation Flow Module:												
Adjustment:	1.00	1.00	1.00	1.00	1.00	1.00	1.00	1.00	1.00	1.00	1.00	1.00
Lanes:	1.00	1.70	0.30	1.00	1.30	0.70	1.00	0.75	0.25	1.00	0.86	0.14
Final Sat.:	494	917	163	545	785	454	524	437	146	519	490	82
Capacity Analysis Module:												
Vol/Sat:	0.03	0.10	0.10	0.03	0.30	0.29	0.11	0.21	0.21	0.01	0.25	0.25
Crit Moves:		****			****			****			****	
Delay/Veh:	9.7	9.6	9.5	9.2	10.8	10.1	10.0	9.9	9.9	9.3	10.5	10.5
Delay Adj:	1.00	1.00	1.00	1.00	1.00	1.00	1.00	1.00	1.00	1.00	1.00	1.00
AdjDel/Veh:	9.7	9.6	9.5	9.2	10.8	10.1	10.0	9.9	9.9	9.3	10.5	10.5
LOS by Move:	A	A	A	A	B	B	A	A	A	A	B	B
ApproachDel:		9.6			10.5			9.9			10.4	
Delay Adj:		1.00			1.00			1.00			1.00	
ApprAdjDel:		9.6			10.5			9.9			10.4	
LOS by Appr:		A			B			A			B	
AllWayAvgQ:	0.0	0.1	0.1	0.0	0.4	0.4	0.1	0.2	0.2	0.0	0.3	0.3

Newport Banning Ranch
Year 2016 without Project - TPO Analysis
AM Peak Hour

Note: Queue reported is the number of cars per lane.

Newport Banning Ranch
Year 2016 without Project - TPO Analysis
AM Peak Hour

Level Of Service Computation Report
ICU 1(Loss as Cycle Length %) Method (Future Volume Alternative)

Intersection #18 Brookhurst St/Banning Ave

Cycle (sec):	100	Critical Vol./Cap.(X):	0.269
Loss Time (sec):	5 (Y+R=4.0 sec)	Average Delay (sec/veh):	xxxxxx
Optimal Cycle:	17	Level Of Service:	A

Street Name:	Brookhurst Street						Banning Avenue					
Approach:	North Bound			South Bound			East Bound			West Bound		
Movement:	L - T - R			L - T - R			L - T - R			L - T - R		
Control:	Protected			Protected			Split Phase			Split Phase		
Rights:	Include			Include			Include			Include		
Min. Green:	0	0	0	0	0	0	0	0	0	0	0	0
Lanes:	1 0 3 0 0			0 0 2 1 0			1 0 0 0 1			0 0 0 0 0		
Volume Module:												
Base Vol:	7	477	0	0	535	102	126	0	14	0	0	0
Growth Adj:	1.07	1.07	1.07	1.07	1.07	1.07	1.07	1.07	1.07	1.07	1.07	1.07
Initial Bse:	8	511	0	0	574	109	135	0	15	0	0	0
Added Vol:	0	0	0	0	0	0	0	0	0	0	0	0
Committed P:	0	3	0	0	6	0	0	0	0	0	0	0
Initial Fut:	8	514	0	0	580	109	135	0	15	0	0	0
User Adj:	1.00	1.00	1.00	1.00	1.00	1.00	1.00	1.00	1.00	1.00	1.00	1.00
PHF Adj:	1.00	1.00	1.00	1.00	1.00	1.00	1.00	1.00	1.00	1.00	1.00	1.00
PHF Volume:	8	514	0	0	580	109	135	0	15	0	0	0
Reduct Vol:	0	0	0	0	0	0	0	0	0	0	0	0
Reduced Vol:	8	514	0	0	580	109	135	0	15	0	0	0
PCE Adj:	1.00	1.00	1.00	1.00	1.00	1.00	1.00	1.00	1.00	1.00	1.00	1.00
MLF Adj:	1.00	1.00	1.00	1.00	1.00	1.00	1.00	1.00	1.00	1.00	1.00	1.00
FinalVolume:	8	514	0	0	580	109	135	0	15	0	0	0
Saturation Flow Module:												
Sat/Lane:	1600	1600	1600	1600	1600	1600	1600	1600	1600	1600	1600	1600
Adjustment:	1.06	1.06	1.06	1.06	1.06	1.06	1.06	1.06	1.06	1.06	1.06	1.06
Lanes:	1.00	3.00	0.00	0.00	2.52	0.48	1.00	0.00	1.00	0.00	0.00	0.00
Final Sat.:	1700	5100	0	0	4290	810	1700	0	1700	0	0	0
Capacity Analysis Module:												
Vol/Sat:	0.00	0.10	0.00	0.00	0.14	0.14	0.08	0.00	0.01	0.00	0.00	0.00
Crit Moves:	****				****		****					

Newport Banning Ranch
Year 2016 without Project - TPO Analysis
AM Peak Hour

Level Of Service Computation Report
ICU 1(Loss as Cycle Length %) Method (Future Volume Alternative)

Intersection #19 Magnolia St/PCH

Cycle (sec):	120	Critical Vol./Cap.(X):	0.515
Loss Time (sec):	6 (Y+R=4.0 sec)	Average Delay (sec/veh):	xxxxxx
Optimal Cycle:	27	Level Of Service:	A

Street Name:	Magnolia Street						Pacific Coast Highway					
Approach:	North Bound			South Bound			East Bound			West Bound		
Movement:	L - T - R			L - T - R			L - T - R			L - T - R		
Control:	Split Phase			Split Phase			Protected			Protected		
Rights:	Include			Include			Include			Include		
Min. Green:	0	0	0	0	0	0	0	0	0	0	0	0
Lanes:	1 0 0 1 0			1 1 0 0 1			1 0 3 0 1			1 0 3 0 1		
Volume Module:												
Base Vol:	3	24	7	232	41	137	116	1607	17	18	614	50
Growth Adj:	1.07	1.07	1.07	1.07	1.07	1.07	1.07	1.07	1.07	1.07	1.07	1.07
Initial Bse:	3	26	8	249	44	147	124	1723	18	19	658	54
Added Vol:	0	0	0	0	0	0	0	0	0	0	0	0
Committed P:	0	0	0	12	0	0	0	35	0	0	21	7
Initial Fut:	3	26	8	261	44	147	124	1758	18	19	679	61
User Adj:	1.00	1.00	1.00	1.00	1.00	1.00	1.00	1.00	1.00	1.00	1.00	1.00
PHF Adj:	1.00	1.00	1.00	1.00	1.00	1.00	1.00	1.00	1.00	1.00	1.00	1.00
PHF Volume:	3	26	8	261	44	147	124	1758	18	19	679	61
Reduct Vol:	0	0	0	0	0	0	0	0	0	0	0	0
Reduced Vol:	3	26	8	261	44	147	124	1758	18	19	679	61
PCE Adj:	1.00	1.00	1.00	1.00	1.00	1.00	1.00	1.00	1.00	1.00	1.00	1.00
MLF Adj:	1.00	1.00	1.00	1.00	1.00	1.00	1.00	1.00	1.00	1.00	1.00	1.00
FinalVolume:	3	26	8	261	44	147	124	1758	18	19	679	61
Saturation Flow Module:												
Sat/Lane:	1600	1600	1600	1600	1600	1600	1600	1600	1600	1600	1600	1600
Adjustment:	1.06	1.06	1.06	1.06	1.06	1.06	1.06	1.06	1.06	1.06	1.06	1.06
Lanes:	1.00	0.77	0.23	1.71	0.29	1.00	1.00	3.00	1.00	1.00	3.00	1.00
Final Sat.:	1700	1316	384	2909	491	1700	1700	5100	1700	1700	5100	1700
Capacity Analysis Module:												
Vol/Sat:	0.00	0.02	0.02	0.09	0.09	0.09	0.07	0.34	0.01	0.01	0.13	0.04
Crit Moves:		****			****			****		****		

Newport Banning Ranch
Year 2016 without Project - TPO Analysis
AM Peak Hour

Level Of Service Computation Report
ICU 1(Loss as Cycle Length %) Method (Future Volume Alternative)

Intersection #20 Brookhurst St/Bushard St

Cycle (sec):	100	Critical Vol./Cap.(X):	0.342
Loss Time (sec):	5 (Y+R=4.0 sec)	Average Delay (sec/veh):	xxxxxx
Optimal Cycle:	18	Level Of Service:	A

Street Name:	Brookhurst Street									Bushard Street								
Approach:	North Bound				South Bound				East Bound				West Bound					
Movement:	L	-	T	-	R	L	-	T	-	R	L	-	T	-	R	L	-	T	-	R
Control:	Protected					Protected					Permitted					Permitted				
Rights:	Include					Include					Include					Include				
Min. Green:	0	0	0			0	0	0			0	0	0			0	0	0		
Lanes:	1	0	2	1	0	1	0	3	0	1	1	0	0	0	1	0	0	0	1	0
Volume Module:																				
Base Vol:	79	427	2			2	487	10			8	0	210			0	1	4		
Growth Adj:	1.07	1.07	1.07			1.07	1.07	1.07			1.07	1.07	1.07			1.07	1.07	1.07		
Initial Bse:	85	458	2			2	522	11			9	0	225			0	1	4		
Added Vol:	0	0	0			0	0	0			0	0	0			0	0	0		
Committed P:	3	6	0			0	9	0			0	0	6			0	0	0		
Initial Fut:	88	464	2			2	531	11			9	0	231			0	1	4		
User Adj:	1.00	1.00	1.00			1.00	1.00	1.00			1.00	1.00	1.00			1.00	1.00	1.00		
PHF Adj:	1.00	1.00	1.00			1.00	1.00	1.00			1.00	1.00	1.00			1.00	1.00	1.00		
PHF Volume:	88	464	2			2	531	11			9	0	231			0	1	4		
Reduct Vol:	0	0	0			0	0	0			0	0	0			0	0	0		
Reduced Vol:	88	464	2			2	531	11			9	0	231			0	1	4		
PCE Adj:	1.00	1.00	1.00			1.00	1.00	1.00			1.00	1.00	1.00			1.00	1.00	1.00		
MLF Adj:	1.00	1.00	1.00			1.00	1.00	1.00			1.00	1.00	1.00			1.00	1.00	1.00		
FinalVolume:	88	464	2			2	531	11			9	0	231			0	1	4		
Saturation Flow Module:																				
Sat/Lane:	1600	1600	1600			1600	1600	1600			1600	1600	1600			1600	1600	1600		
Adjustment:	1.06	1.06	1.06			1.06	1.06	1.06			1.06	1.06	1.06			1.06	1.06	1.06		
Lanes:	1.00	2.99	0.01			1.00	3.00	1.00			1.00	0.00	1.00			0.00	0.20	0.80		
Final Sat.:	1700	5077	23			1700	5100	1700			1700	0	1700			0	340	1360		
Capacity Analysis Module:																				
Vol/Sat:	0.05	0.09	0.09			0.00	0.10	0.01			0.01	0.00	0.14			0.00	0.00	0.00		
Crit Moves:	****						****						****			****				

Newport Banning Ranch
Year 2016 without Project - TPO Analysis
AM Peak Hour

Level Of Service Computation Report
ICU 1(Loss as Cycle Length %) Method (Future Volume Alternative)

Intersection #21 Brookhurst St/PCH

Cycle (sec):	120	Critical Vol./Cap.(X):	0.610
Loss Time (sec):	6 (Y+R=4.0 sec)	Average Delay (sec/veh):	xxxxxx
Optimal Cycle:	33	Level Of Service:	B

Street Name:	Brookhurst Street						Pacific Coast HIghway					
Approach:	North Bound			South Bound			East Bound			West Bound		
Movement:	L - T - R			L - T - R			L - T - R			L - T - R		
Control:	Split Phase			Split Phase			Protected			Protected		
Rights:	Include			Include			Include			Ovl		
Min. Green:	0	0	0	0	0	0	0	0	0	0	0	0
Lanes:	1 0 0 1 0			2 0 1 0 1			1 0 3 0 1			1 0 3 0 1		
Volume Module:												
Base Vol:	4	19	12	513	6	117	166	1721	2	6	639	305
Growth Adj:	1.07	1.07	1.07	1.07	1.07	1.07	1.07	1.07	1.07	1.07	1.07	1.07
Initial Bse:	4	20	13	550	6	125	178	1845	2	6	685	327
Added Vol:	0	0	0	0	0	0	0	0	0	0	0	0
Committed P:	0	0	0	15	0	0	0	47	0	0	28	9
Initial Fut:	4	20	13	565	6	125	178	1892	2	6	713	336
User Adj:	1.00	1.00	1.00	1.00	1.00	1.00	1.00	1.00	1.00	1.00	1.00	1.00
PHF Adj:	1.00	1.00	1.00	1.00	1.00	1.00	1.00	1.00	1.00	1.00	1.00	1.00
PHF Volume:	4	20	13	565	6	125	178	1892	2	6	713	336
Reduct Vol:	0	0	0	0	0	0	0	0	0	0	0	0
Reduced Vol:	4	20	13	565	6	125	178	1892	2	6	713	336
PCE Adj:	1.00	1.00	1.00	1.00	1.00	1.00	1.00	1.00	1.00	1.00	1.00	1.00
MLF Adj:	1.00	1.00	1.00	1.00	1.00	1.00	1.00	1.00	1.00	1.00	1.00	1.00
FinalVolume:	4	20	13	565	6	125	178	1892	2	6	713	336
OvlAdjVol:												53
Saturation Flow Module:												
Sat/Lane:	1600	1600	1600	1600	1600	1600	1600	1600	1600	1600	1600	1600
Adjustment:	1.06	1.06	1.06	1.06	1.06	1.06	1.06	1.06	1.06	1.06	1.06	1.06
Lanes:	1.00	0.61	0.39	2.00	1.00	1.00	1.00	3.00	1.00	1.00	3.00	1.00
Final Sat.:	1700	1042	658	3400	1700	1700	1700	5100	1700	1700	5100	1700
Capacity Analysis Module:												
Vol/Sat:	0.00	0.02	0.02	0.17	0.00	0.07	0.10	0.37	0.00	0.00	0.14	0.20
OvlAdjV/S:												0.03
Crit Moves:	****			****				****		****		

Newport Banning Ranch
Year 2016 without Project - TPO Analysis
AM Peak Hour

Level Of Service Computation Report
ICU 1(Loss as Cycle Length %) Method (Future Volume Alternative)

Intersection #22 Placentia Ave/Victoria St

Cycle (sec):	100	Critical Vol./Cap.(X):	0.797
Loss Time (sec):	0 (Y+R=4.0 sec)	Average Delay (sec/veh):	xxxxxx
Optimal Cycle:	112	Level Of Service:	C

Street Name:	Placentia Avenue						Victoria Street					
Approach:	North Bound			South Bound			East Bound			West Bound		
Movement:	L - T - R			L - T - R			L - T - R			L - T - R		
Control:	Protected			Protected			Protected			Protected		
Rights:	Include			Include			Ovl			Include		
Min. Green:	0	0	0	0	0	0	0	0	0	0	0	0
Lanes:	2 0 2	0 1		1 0 2	0 1		1 0 2	0 1		1 0 2	0 1	
Volume Module:												
Base Vol:	271	404	169	122	559	45	80	1192	464	179	493	101
Growth Adj:	1.07	1.07	1.07	1.07	1.07	1.07	1.07	1.07	1.07	1.07	1.07	1.07
Initial Bse:	291	433	181	131	599	48	86	1278	497	192	528	108
Added Vol:	0	0	0	0	0	0	0	0	0	0	0	0
Committed P:	0	0	0	0	0	0	0	0	0	0	0	0
Initial Fut:	291	433	181	131	599	48	86	1278	497	192	528	108
User Adj:	1.00	1.00	1.00	1.00	1.00	1.00	1.00	1.00	1.00	1.00	1.00	1.00
PHF Adj:	1.00	1.00	1.00	1.00	1.00	1.00	1.00	1.00	1.00	1.00	1.00	1.00
PHF Volume:	291	433	181	131	599	48	86	1278	497	192	528	108
Reduct Vol:	0	0	0	0	0	0	0	0	0	0	0	0
Reduced Vol:	291	433	181	131	599	48	86	1278	497	192	528	108
PCE Adj:	1.00	1.00	1.00	1.00	1.00	1.00	1.00	1.00	1.00	1.00	1.00	1.00
MLF Adj:	1.00	1.00	1.00	1.00	1.00	1.00	1.00	1.00	1.00	1.00	1.00	1.00
FinalVolume:	291	433	181	131	599	48	86	1278	497	192	528	108
OvlAdjVol:									352			
Saturation Flow Module:												
Sat/Lane:	1600	1600	1600	1600	1600	1600	1600	1600	1600	1600	1600	1600
Adjustment:	1.00	1.00	1.00	1.00	1.00	1.00	1.00	1.00	1.00	1.00	1.00	1.00
Lanes:	2.00	2.00	1.00	1.00	2.00	1.00	1.00	2.00	1.00	1.00	2.00	1.00
Final Sat.:	3200	3200	1600	1600	3200	1600	1600	3200	1600	1600	3200	1600
Capacity Analysis Module:												
Vol/Sat:	0.09	0.14	0.11	0.08	0.19	0.03	0.05	0.40	0.31	0.12	0.17	0.07
OvlAdjV/S:									0.22			
Crit Moves:	****				****			****		****		

Newport Banning Ranch
Year 2016 without Project - TPO Analysis
AM Peak Hour

Level Of Service Computation Report
ICU 1(Loss as Cycle Length %) Method (Future Volume Alternative)

Intersection #23 Pomona Ave/Victoria St

Cycle (sec):	100	Critical Vol./Cap.(X):	0.673
Loss Time (sec):	0 (Y+R=4.0 sec)	Average Delay (sec/veh):	xxxxxx
Optimal Cycle:	44	Level Of Service:	B

Street Name:	Pomona Avenue						Victoria Street					
Approach:	North Bound			South Bound			East Bound			West Bound		
Movement:	L - T - R			L - T - R			L - T - R			L - T - R		
Control:	Permitted			Permitted			Permitted			Permitted		
Rights:	Include			Include			Include			Include		
Min. Green:	0	0	0	0	0	0	0	0	0	0	0	0
Lanes:	1 0 0 1 0			1 0 0 1 0			1 0 2 0 1			1 0 2 0 1		
Volume Module:												
Base Vol:	32	89	77	10	110	14	15	1486	52	86	690	18
Growth Adj:	1.07	1.07	1.07	1.07	1.07	1.07	1.07	1.07	1.07	1.07	1.07	1.07
Initial Bse:	34	95	83	11	118	15	16	1593	56	92	740	19
Added Vol:	0	0	0	0	0	0	0	0	0	0	0	0
Committed P:	0	0	0	0	0	0	0	0	0	0	0	0
Initial Fut:	34	95	83	11	118	15	16	1593	56	92	740	19
User Adj:	1.00	1.00	1.00	1.00	1.00	1.00	1.00	1.00	1.00	1.00	1.00	1.00
PHF Adj:	1.00	1.00	1.00	1.00	1.00	1.00	1.00	1.00	1.00	1.00	1.00	1.00
PHF Volume:	34	95	83	11	118	15	16	1593	56	92	740	19
Reduct Vol:	0	0	0	0	0	0	0	0	0	0	0	0
Reduced Vol:	34	95	83	11	118	15	16	1593	56	92	740	19
PCE Adj:	1.00	1.00	1.00	1.00	1.00	1.00	1.00	1.00	1.00	1.00	1.00	1.00
MLF Adj:	1.00	1.00	1.00	1.00	1.00	1.00	1.00	1.00	1.00	1.00	1.00	1.00
FinalVolume:	34	95	83	11	118	15	16	1593	56	92	740	19
Saturation Flow Module:												
Sat/Lane:	1600	1600	1600	1600	1600	1600	1600	1600	1600	1600	1600	1600
Adjustment:	1.00	1.00	1.00	1.00	1.00	1.00	1.00	1.00	1.00	1.00	1.00	1.00
Lanes:	1.00	0.54	0.46	1.00	0.89	0.11	1.00	2.00	1.00	1.00	2.00	1.00
Final Sat.:	1600	858	742	1600	1419	181	1600	3200	1600	1600	3200	1600
Capacity Analysis Module:												
Vol/Sat:	0.02	0.11	0.11	0.01	0.08	0.08	0.01	0.50	0.03	0.06	0.23	0.01
Crit Moves:		****		****				****		****		

Newport Banning Ranch
Year 2016 without Project - TPO Analysis
AM Peak Hour

Level Of Service Computation Report
ICU 1(Loss as Cycle Length %) Method (Future Volume Alternative)

Intersection #24 Harbor Blvd/Victoria St

Cycle (sec):	100	Critical Vol./Cap.(X):	0.750
Loss Time (sec):	0 (Y+R=4.0 sec)	Average Delay (sec/veh):	xxxxxx
Optimal Cycle:	91	Level Of Service:	C

Street Name:	Harbor Boulevard									Victoria Street								
Approach:	North Bound			South Bound			East Bound			West Bound		
Movement:	L	- T	- R	L	- T	- R	L	- T	- R	L	- T	- R
Control:	Protected			Protected			Protected			Protected		
Rights:	Include			Ovl			Include			Include		
Min. Green:	0	0	0	0	0	0	0	0	0	0	0	0
Lanes:	1 0	3 0	1	1 0	3 0	1	2 0	1 1	0	2 0	2 0	1
Volume Module:												
Base Vol:	60	615	90	119	933	166	248	1272	89	135	623	109
Growth Adj:	1.07	1.07	1.07	1.07	1.07	1.07	1.07	1.07	1.07	1.07	1.07	1.07
Initial Bse:	64	659	96	128	1000	178	266	1364	95	145	668	117
Added Vol:	0	0	0	0	0	0	0	0	0	0	0	0
Committed P:	0	0	0	0	0	0	0	0	0	0	0	0
Initial Fut:	64	659	96	128	1000	178	266	1364	95	145	668	117
User Adj:	1.00	1.00	1.00	1.00	1.00	1.00	1.00	1.00	1.00	1.00	1.00	1.00
PHF Adj:	1.00	1.00	1.00	1.00	1.00	1.00	1.00	1.00	1.00	1.00	1.00	1.00
PHF Volume:	64	659	96	128	1000	178	266	1364	95	145	668	117
Reduct Vol:	0	0	0	0	0	0	0	0	0	0	0	0
Reduced Vol:	64	659	96	128	1000	178	266	1364	95	145	668	117
PCE Adj:	1.00	1.00	1.00	1.00	1.00	1.00	1.00	1.00	1.00	1.00	1.00	1.00
MLF Adj:	1.00	1.00	1.00	1.00	1.00	1.00	1.00	1.00	1.00	1.00	1.00	1.00
FinalVolume:	64	659	96	128	1000	178	266	1364	95	145	668	117
OvlAdjVol:						45						
Saturation Flow Module:												
Sat/Lane:	1600	1600	1600	1600	1600	1600	1600	1600	1600	1600	1600	1600
Adjustment:	1.00	1.00	1.00	1.00	1.00	1.00	1.00	1.00	1.00	1.00	1.00	1.00
Lanes:	1.00	3.00	1.00	1.00	3.00	1.00	2.00	1.87	0.13	2.00	2.00	1.00
Final Sat.:	1600	4800	1600	1600	4800	1600	3200	2991	209	3200	3200	1600
Capacity Analysis Module:												
Vol/Sat:	0.04	0.14	0.06	0.08	0.21	0.11	0.08	0.46	0.46	0.05	0.21	0.07
OvlAdjV/S:						0.03						
Crit Moves:	****				****			****			****	

Newport Banning Ranch
Year 2016 without Project - TPO Analysis
AM Peak Hour

Level Of Service Computation Report
ICU 1(Loss as Cycle Length %) Method (Future Volume Alternative)

Intersection #25 Newport Blvd/Victoria St [Ramp]

Cycle (sec):	120	Critical Vol./Cap.(X):	0.591
Loss Time (sec):	0 (Y+R=4.0 sec)	Average Delay (sec/veh):	xxxxxx
Optimal Cycle:	46	Level Of Service:	A

Street Name:	Newport Boulevard									Victoria Street								
Approach:	North Bound			South Bound			East Bound			West Bound		
Movement:	L	- T	- R	L	- T	- R	L	- T	- R	L	- T	- R
Control:	Permitted			Permitted			Protected			Protected		
Rights:	Include			Ignore			Include			Include		
Min. Green:	0	0	0	0	0	0	0	0	0	0	0	0
Lanes:	0 0	0 0	0	1 1	2 0	1	0 0	2 1	0	1 0	1 0	0
Volume Module:												
Base Vol:	0	0	0	304	706	749	0	1629	30	77	279	0
Growth Adj:	1.07	1.07	1.07	1.07	1.07	1.07	1.07	1.07	1.07	1.07	1.07	1.07
Initial Bse:	0	0	0	326	757	803	0	1746	32	83	299	0
Added Vol:	0	0	0	0	0	0	0	0	0	0	0	0
Committed P:	0	0	0	0	0	0	0	0	0	0	0	0
Initial Fut:	0	0	0	326	757	803	0	1746	32	83	299	0
User Adj:	1.00	1.00	1.00	1.00	1.00	0.00	1.00	1.00	1.00	1.00	1.00	1.00
PHF Adj:	1.00	1.00	1.00	1.00	1.00	0.00	1.00	1.00	1.00	1.00	1.00	1.00
PHF Volume:	0	0	0	326	757	0	0	1746	32	83	299	0
Reduct Vol:	0	0	0	0	0	0	0	0	0	0	0	0
Reduced Vol:	0	0	0	326	757	0	0	1746	32	83	299	0
PCE Adj:	1.00	1.00	1.00	1.00	1.00	0.00	1.00	1.00	1.00	1.00	1.00	1.00
MLF Adj:	1.00	1.00	1.00	1.00	1.00	0.00	1.00	1.00	1.00	1.00	1.00	1.00
FinalVolume:	0	0	0	326	757	0	0	1746	32	83	299	0
Saturation Flow Module:												
Sat/Lane:	1600	1600	1600	1600	1600	1600	1600	1600	1600	1600	1600	1600
Adjustment:	1.00	1.00	1.00	1.00	1.00	1.00	1.00	1.00	1.00	1.00	1.00	1.00
Lanes:	0.00	0.00	0.00	1.20	2.80	1.00	0.00	2.95	0.05	1.00	1.00	0.00
Final Sat.:	0	0	0	1926	4474	1600	0	4713	87	1600	1600	0
Capacity Analysis Module:												
Vol/Sat:	0.00	0.00	0.00	0.17	0.17	0.00	0.00	0.37	0.37	0.05	0.19	0.00
Crit Moves:				****				****		****		

Newport Banning Ranch
Year 2016 without Project - TPO Analysis
AM Peak Hour

Level Of Service Computation Report
ICU 1(Loss as Cycle Length %) Method (Future Volume Alternative)

Intersection #26 Newport Blvd /Victoria St (22nd St) [Ramp]

Cycle (sec):	120	Critical Vol./Cap.(X):	1.033
Loss Time (sec):	0 (Y+R=4.0 sec)	Average Delay (sec/veh):	xxxxxx
Optimal Cycle:	180	Level Of Service:	F

Street Name:	Newport Boulevard						Victoria Street (22nd Street)					
Approach:	North Bound			South Bound			East Bound			West Bound		
Movement:	L - T - R			L - T - R			L - T - R			L - T - R		
Control:	Permitted			Permitted			Protected			Protected		
Rights:	Include			Include			Include			Include		
Min. Green:	0	0	0	0	0	0	0	0	0	0	0	0
Lanes:	0 1	2 0	1	0 0	0 0	0	2 0	2 0	0	0 0	1 0	1
Volume Module:												
Base Vol:	87	1212	32	0	0	0	1587	316	0	0	266	316
Growth Adj:	1.07	1.07	1.07	1.07	1.07	1.07	1.07	1.07	1.07	1.07	1.07	1.07
Initial Bse:	93	1299	34	0	0	0	1701	339	0	0	285	339
Added Vol:	0	0	0	0	0	0	0	0	0	0	0	0
Committed P:	0	0	0	0	0	0	0	0	0	0	0	0
Initial Fut:	93	1299	34	0	0	0	1701	339	0	0	285	339
User Adj:	1.00	1.00	1.00	1.00	1.00	1.00	1.00	1.00	1.00	1.00	1.00	1.00
PHF Adj:	1.00	1.00	1.00	1.00	1.00	1.00	1.00	1.00	1.00	1.00	1.00	1.00
PHF Volume:	93	1299	34	0	0	0	1701	339	0	0	285	339
Reduct Vol:	0	0	0	0	0	0	0	0	0	0	0	0
Reduced Vol:	93	1299	34	0	0	0	1701	339	0	0	285	339
PCE Adj:	1.00	1.00	1.00	1.00	1.00	1.00	1.00	1.00	1.00	1.00	1.00	1.00
MLF Adj:	1.00	1.00	1.00	1.00	1.00	1.00	1.00	1.00	1.00	1.00	1.00	1.00
FinalVolume:	93	1299	34	0	0	0	1701	339	0	0	285	339
Saturation Flow Module:												
Sat/Lane:	1600	1600	1600	1600	1600	1600	1600	1600	1600	1600	1600	1600
Adjustment:	1.00	1.00	1.00	1.00	1.00	1.00	1.00	1.00	1.00	1.00	1.00	1.00
Lanes:	0.20	2.80	1.00	0.00	0.00	0.00	2.00	2.00	0.00	0.00	1.00	1.00
Final Sat.:	321	4479	1600	0	0	0	3200	3200	0	0	1600	1600
Capacity Analysis Module:												
Vol/Sat:	0.06	0.29	0.02	0.00	0.00	0.00	0.53	0.11	0.00	0.00	0.18	0.21
Crit Moves:		****					****					****

Newport Banning Ranch
Year 2016 without Project - TPO Analysis
AM Peak Hour

Level Of Service Computation Report
2000 HCM 4-Way Stop Method (Future Volume Alternative)

Intersection #27 Whittier Ave/19th St

Cycle (sec):	100	Critical Vol./Cap.(X):	0.378
Loss Time (sec):	0 (Y+R=4.0 sec)	Average Delay (sec/veh):	10.3
Optimal Cycle:	0	Level Of Service:	B

Street Name:	Whittier Avenue						19th St					
Approach:	North Bound			South Bound			East Bound			West Bound		
Movement:	L -	T -	R	L -	T -	R	L -	T -	R	L -	T -	R
Control:	Stop Sign			Stop Sign			Stop Sign			Stop Sign		
Rights:	Include			Include			Include			Include		
Min. Green:	0	0	0	0	0	0	0	0	0	0	0	0
Lanes:	0 0	1! 0	0	0 1	0 0	0	1 0	0 1	0	1 0	0 1	0
Volume Module:												
Base Vol:	5	6	258	10	6	0	1	123	7	210	29	10
Growth Adj:	1.07	1.07	1.07	1.07	1.07	1.07	1.07	1.07	1.07	1.07	1.07	1.07
Initial Bse:	5	6	277	11	6	0	1	132	8	225	31	11
Added Vol:	0	0	0	0	0	0	0	0	0	0	0	0
Committed P:	0	0	0	0	0	0	0	0	0	0	0	0
Initial Fut:	5	6	277	11	6	0	1	132	8	225	31	11
User Adj:	1.00	1.00	1.00	1.00	1.00	1.00	1.00	1.00	1.00	1.00	1.00	1.00
PHF Adj:	1.00	1.00	1.00	1.00	1.00	1.00	1.00	1.00	1.00	1.00	1.00	1.00
PHF Volume:	5	6	277	11	6	0	1	132	8	225	31	11
Reduct Vol:	0	0	0	0	0	0	0	0	0	0	0	0
Reduced Vol:	5	6	277	11	6	0	1	132	8	225	31	11
PCE Adj:	1.00	1.00	1.00	1.00	1.00	1.00	1.00	1.00	1.00	1.00	1.00	1.00
MLF Adj:	1.00	1.00	1.00	1.00	1.00	1.00	1.00	1.00	1.00	1.00	1.00	1.00
FinalVolume:	5	6	277	11	6	0	1	132	8	225	31	11
Saturation Flow Module:												
Adjustment:	1.00	1.00	1.00	1.00	1.00	1.00	1.00	1.00	1.00	1.00	1.00	1.00
Lanes:	0.02	0.02	0.96	0.62	0.38	0.00	1.00	0.95	0.05	1.00	0.74	0.26
Final Sat.:	14	17	740	376	225	0	572	593	34	595	497	172
Capacity Analysis Module:												
Vol/Sat:	0.37	0.37	0.37	0.03	0.03	xxxx	0.00	0.22	0.22	0.38	0.06	0.06
Crit Moves:	****				****			****		****		
Delay/Veh:	9.9	9.9	9.9	8.6	8.6	0.0	8.7	9.6	9.6	11.9	8.2	8.2
Delay Adj:	1.00	1.00	1.00	1.00	1.00	1.00	1.00	1.00	1.00	1.00	1.00	1.00
AdjDel/Veh:	9.9	9.9	9.9	8.6	8.6	0.0	8.7	9.6	9.6	11.9	8.2	8.2
LOS by Move:	A	A	A	A	A	*	A	A	A	B	A	A
ApproachDel:	9.9			8.6			9.6			11.3		
Delay Adj:	1.00			1.00			1.00			1.00		
ApprAdjDel:	9.9			8.6			9.6			11.3		
LOS by Appr:	A			A			A			B		
AllWayAvgQ:	0.5	0.5	0.5	0.0	0.0	0.0	0.0	0.3	0.3	0.6	0.1	0.1

Newport Banning Ranch
Year 2016 without Project - TPO Analysis
AM Peak Hour

Note: Queue reported is the number of cars per lane.

Newport Banning Ranch
Year 2016 without Project - TPO Analysis
AM Peak Hour

Level Of Service Computation Report
2000 HCM 4-Way Stop Method (Future Volume Alternative)

Intersection #28 Monrovia Ave/19th St

Cycle (sec):	100	Critical Vol./Cap.(X):	0.823
Loss Time (sec):	0 (Y+R=4.0 sec)	Average Delay (sec/veh):	19.9
Optimal Cycle:	0	Level Of Service:	C

Street Name:	Monrovia Avenue						19th Street					
Approach:	North Bound			South Bound			East Bound			West Bound		
Movement:	L -	T -	R	L -	T -	R	L -	T -	R	L -	T -	R
Control:	Stop Sign			Stop Sign			Stop Sign			Stop Sign		
Rights:	Include			Include			Include			Include		
Min. Green:	0	0	0	0	0	0	0	0	0	0	0	0
Lanes:	0 1	0 0	1	0 0	1!	0 0	1 0	1 0	1	1 0	1 0	1
Volume Module:												
Base Vol:	31	10	162	79	19	1	4	403	34	154	213	30
Growth Adj:	1.07	1.07	1.07	1.07	1.07	1.07	1.07	1.07	1.07	1.07	1.07	1.07
Initial Bse:	33	11	174	85	20	1	4	432	36	165	228	32
Added Vol:	0	0	0	0	0	0	0	0	0	0	0	0
Committed P:	0	0	0	0	0	0	0	0	0	0	0	0
Initial Fut:	33	11	174	85	20	1	4	432	36	165	228	32
User Adj:	1.00	1.00	1.00	1.00	1.00	1.00	1.00	1.00	1.00	1.00	1.00	1.00
PHF Adj:	1.00	1.00	1.00	1.00	1.00	1.00	1.00	1.00	1.00	1.00	1.00	1.00
PHF Volume:	33	11	174	85	20	1	4	432	36	165	228	32
Reduct Vol:	0	0	0	0	0	0	0	0	0	0	0	0
Reduced Vol:	33	11	174	85	20	1	4	432	36	165	228	32
PCE Adj:	1.00	1.00	1.00	1.00	1.00	1.00	1.00	1.00	1.00	1.00	1.00	1.00
MLF Adj:	1.00	1.00	1.00	1.00	1.00	1.00	1.00	1.00	1.00	1.00	1.00	1.00
FinalVolume:	33	11	174	85	20	1	4	432	36	165	228	32
Saturation Flow Module:												
Adjustment:	1.00	1.00	1.00	1.00	1.00	1.00	1.00	1.00	1.00	1.00	1.00	1.00
Lanes:	0.76	0.24	1.00	0.80	0.19	0.01	1.00	1.00	1.00	1.00	1.00	1.00
Final Sat.:	337	109	517	348	84	4	480	525	573	468	502	549
Capacity Analysis Module:												
Vol/Sat:	0.10	0.10	0.34	0.24	0.24	0.24	0.01	0.82	0.06	0.35	0.46	0.06
Crit Moves:			****			****		****			****	
Delay/Veh:	11.1	11.1	12.1	12.8	12.8	12.8	10.0	32.4	9.2	13.9	14.9	9.3
Delay Adj:	1.00	1.00	1.00	1.00	1.00	1.00	1.00	1.00	1.00	1.00	1.00	1.00
AdjDel/Veh:	11.1	11.1	12.1	12.8	12.8	12.8	10.0	32.4	9.2	13.9	14.9	9.3
LOS by Move:	B	B	B	B	B	B	B	D	A	B	B	A
ApproachDel:	11.9			12.8			30.4			14.1		
Delay Adj:	1.00			1.00			1.00			1.00		
ApprAdjDel:	11.9			12.8			30.4			14.1		
LOS by Appr:	B			B			D			B		
AllWayAvgQ:	0.1	0.1	0.4	0.3	0.3	0.3	0.0	3.4	0.1	0.5	0.7	0.1

Newport Banning Ranch
Year 2016 without Project - TPO Analysis
AM Peak Hour

Note: Queue reported is the number of cars per lane.

Newport Banning Ranch
Year 2016 without Project - TPO Analysis
AM Peak Hour

Level Of Service Computation Report
ICU 1(Loss as Cycle Length %) Method (Future Volume Alternative)

Intersection #29 Placentia Ave/19th St

Cycle (sec):	100	Critical Vol./Cap.(X):	0.519
Loss Time (sec):	0 (Y+R=4.0 sec)	Average Delay (sec/veh):	xxxxxx
Optimal Cycle:	47	Level Of Service:	A

Street Name:	Placentia Avenue						19th Street					
Approach:	North Bound			South Bound			East Bound			West Bound		
Movement:	L - T - R			L - T - R			L - T - R			L - T - R		
Control:	Protected			Protected			Protected			Protected		
Rights:	Include			Include			Include			Include		
Min. Green:	0	0	0	0	0	0	0	0	0	0	0	0
Lanes:	1 0 2	0 1		1 0 1	1 0		2 0 1	1 0		2 0 2	0 1	
Volume Module:												
Base Vol:	31	412	217	140	495	115	201	582	33	219	328	165
Growth Adj:	1.07	1.07	1.07	1.07	1.07	1.07	1.07	1.07	1.07	1.07	1.07	1.07
Initial Bse:	33	442	233	150	531	123	215	624	35	235	352	177
Added Vol:	0	0	0	0	0	0	0	0	0	0	0	0
Committed P:	0	1	0	0	0	0	0	0	0	0	0	0
Initial Fut:	33	443	233	150	531	123	215	624	35	235	352	177
User Adj:	1.00	1.00	1.00	1.00	1.00	1.00	1.00	1.00	1.00	1.00	1.00	1.00
PHF Adj:	1.00	1.00	1.00	1.00	1.00	1.00	1.00	1.00	1.00	1.00	1.00	1.00
PHF Volume:	33	443	233	150	531	123	215	624	35	235	352	177
Reduct Vol:	0	0	0	0	0	0	0	0	0	0	0	0
Reduced Vol:	33	443	233	150	531	123	215	624	35	235	352	177
PCE Adj:	1.00	1.00	1.00	1.00	1.00	1.00	1.00	1.00	1.00	1.00	1.00	1.00
MLF Adj:	1.00	1.00	1.00	1.00	1.00	1.00	1.00	1.00	1.00	1.00	1.00	1.00
FinalVolume:	33	443	233	150	531	123	215	624	35	235	352	177
Saturation Flow Module:												
Sat/Lane:	1600	1600	1600	1600	1600	1600	1600	1600	1600	1600	1600	1600
Adjustment:	1.00	1.00	1.00	1.00	1.00	1.00	1.00	1.00	1.00	1.00	1.00	1.00
Lanes:	1.00	2.00	1.00	1.00	1.62	0.38	2.00	1.89	0.11	2.00	2.00	1.00
Final Sat.:	1600	3200	1600	1600	2597	603	3200	3028	172	3200	3200	1600
Capacity Analysis Module:												
Vol/Sat:	0.02	0.14	0.15	0.09	0.20	0.20	0.07	0.21	0.21	0.07	0.11	0.11
Crit Moves:			****	****				****		****		

Newport Banning Ranch
Year 2016 without Project - TPO Analysis
AM Peak Hour

Level Of Service Computation Report
ICU 1(Loss as Cycle Length %) Method (Future Volume Alternative)

Intersection #30 Pomona Ave/19th St

Cycle (sec):	100	Critical Vol./Cap.(X):	0.499
Loss Time (sec):	0 (Y+R=4.0 sec)	Average Delay (sec/veh):	xxxxxx
Optimal Cycle:	46	Level Of Service:	A

Street Name:	Pomona Avenue						19th Street					
Approach:	North Bound			South Bound			East Bound			West Bound		
Movement:	L - T - R			L - T - R			L - T - R			L - T - R		
Control:	Protected			Protected			Prot+Permit			Prot+Permit		
Rights:	Include			Include			Include			Include		
Min. Green:	0	0	0	0	0	0	0	0	0	0	0	0
Lanes:	1 0 0 1 0			1 0 0 1 0			1 0 1 1 0			1 0 1 1 0		
Volume Module:												
Base Vol:	36	75	71	52	94	36	38	847	39	104	615	26
Growth Adj:	1.07	1.07	1.07	1.07	1.07	1.07	1.07	1.07	1.07	1.07	1.07	1.07
Initial Bse:	39	80	76	56	101	39	41	908	42	111	659	28
Added Vol:	0	0	0	0	0	0	0	0	0	0	0	0
Committed P:	0	0	0	0	0	0	0	0	0	0	0	0
Initial Fut:	39	80	76	56	101	39	41	908	42	111	659	28
User Adj:	1.00	1.00	1.00	1.00	1.00	1.00	1.00	1.00	1.00	1.00	1.00	1.00
PHF Adj:	1.00	1.00	1.00	1.00	1.00	1.00	1.00	1.00	1.00	1.00	1.00	1.00
PHF Volume:	39	80	76	56	101	39	41	908	42	111	659	28
Reduct Vol:	0	0	0	0	0	0	0	0	0	0	0	0
Reduced Vol:	39	80	76	56	101	39	41	908	42	111	659	28
PCE Adj:	1.00	1.00	1.00	1.00	1.00	1.00	1.00	1.00	1.00	1.00	1.00	1.00
MLF Adj:	1.00	1.00	1.00	1.00	1.00	1.00	1.00	1.00	1.00	1.00	1.00	1.00
FinalVolume:	39	80	76	56	101	39	41	908	42	111	659	28
Saturation Flow Module:												
Sat/Lane:	1600	1600	1600	1600	1600	1600	1600	1600	1600	1600	1600	1600
Adjustment:	1.00	1.00	1.00	1.00	1.00	1.00	1.00	1.00	1.00	1.00	1.00	1.00
Lanes:	1.00	0.51	0.49	1.00	0.72	0.28	1.00	1.91	0.09	1.00	1.92	0.08
Final Sat.:	1600	822	778	1600	1157	443	1600	3059	141	1600	3070	130
Capacity Analysis Module:												
Vol/Sat:	0.02	0.10	0.10	0.03	0.09	0.09	0.03	0.30	0.30	0.07	0.21	0.21
Crit Moves:		****		****				****		****		

Newport Banning Ranch
Year 2016 without Project - TPO Analysis
AM Peak Hour

Level Of Service Computation Report
ICU 1(Loss as Cycle Length %) Method (Future Volume Alternative)

Intersection #31 Anaheim Ave/19th St

Cycle (sec):	100	Critical Vol./Cap.(X):	0.501
Loss Time (sec):	0 (Y+R=4.0 sec)	Average Delay (sec/veh):	xxxxxx
Optimal Cycle:	37	Level Of Service:	A

Street Name:	Anaheim Avenue						19th Street					
Approach:	North Bound			South Bound			East Bound			West Bound		
Movement:	L - T - R			L - T - R			L - T - R			L - T - R		
Control:	Permitted			Permitted			Prot+Permit			Prot+Permit		
Rights:	Include			Include			Include			Include		
Min. Green:	0	0	0	0	0	0	0	0	0	0	0	0
Lanes:	1 0 0 1 0			1 0 0 1 0			1 0 1 1 0			1 0 2 0 1		
Volume Module:												
Base Vol:	27	26	88	41	41	23	24	961	18	103	724	33
Growth Adj:	1.07	1.07	1.07	1.07	1.07	1.07	1.07	1.07	1.07	1.07	1.07	1.07
Initial Bse:	29	28	94	44	44	25	26	1030	19	110	776	35
Added Vol:	0	0	0	0	0	0	0	0	0	0	0	0
Committed P:	0	0	0	0	0	0	0	0	0	0	0	0
Initial Fut:	29	28	94	44	44	25	26	1030	19	110	776	35
User Adj:	1.00	1.00	1.00	1.00	1.00	1.00	1.00	1.00	1.00	1.00	1.00	1.00
PHF Adj:	1.00	1.00	1.00	1.00	1.00	1.00	1.00	1.00	1.00	1.00	1.00	1.00
PHF Volume:	29	28	94	44	44	25	26	1030	19	110	776	35
Reduct Vol:	0	0	0	0	0	0	0	0	0	0	0	0
Reduced Vol:	29	28	94	44	44	25	26	1030	19	110	776	35
PCE Adj:	1.00	1.00	1.00	1.00	1.00	1.00	1.00	1.00	1.00	1.00	1.00	1.00
MLF Adj:	1.00	1.00	1.00	1.00	1.00	1.00	1.00	1.00	1.00	1.00	1.00	1.00
FinalVolume:	29	28	94	44	44	25	26	1030	19	110	776	35
Saturation Flow Module:												
Sat/Lane:	1600	1600	1600	1600	1600	1600	1600	1600	1600	1600	1600	1600
Adjustment:	1.00	1.00	1.00	1.00	1.00	1.00	1.00	1.00	1.00	1.00	1.00	1.00
Lanes:	1.00	0.23	0.77	1.00	0.64	0.36	1.00	1.96	0.04	1.00	2.00	1.00
Final Sat.:	1600	365	1235	1600	1025	575	1600	3141	59	1600	3200	1600
Capacity Analysis Module:												
Vol/Sat:	0.02	0.08	0.08	0.03	0.04	0.04	0.02	0.33	0.33	0.07	0.24	0.02
Crit Moves:		****		****				****		****		

Newport Banning Ranch
Year 2016 without Project - TPO Analysis
AM Peak Hour

Level Of Service Computation Report
ICU 1(Loss as Cycle Length %) Method (Future Volume Alternative)

Intersection #32 Park Ave/19th St

Cycle (sec):	100	Critical Vol./Cap.(X):	0.474
Loss Time (sec):	0 (Y+R=4.0 sec)	Average Delay (sec/veh):	xxxxxx
Optimal Cycle:	35	Level Of Service:	A

Street Name:	Park Avenue						19th St					
Approach:	North Bound			South Bound			East Bound			West Bound		
Movement:	L - T - R			L - T - R			L - T - R			L - T - R		
Control:	Permitted			Permitted			Prot+Permit			Prot+Permit		
Rights:	Include			Include			Include			Include		
Min. Green:	0	0	0	0	0	0	0	0	0	0	0	0
Lanes:	2 0 0 0 1			0 0 0 0 0			1 0 2 0 1			1 0 3 0 0		
Volume Module:												
Base Vol:	43	0	108	0	0	0	6	1012	60	94	800	0
Growth Adj:	1.07	1.07	1.07	1.07	1.07	1.07	1.07	1.07	1.07	1.07	1.07	1.07
Initial Bse:	46	0	116	0	0	0	6	1085	64	101	858	0
Added Vol:	0	0	0	0	0	0	0	0	0	0	0	0
Committed P:	0	0	0	0	0	0	0	0	0	0	0	0
Initial Fut:	46	0	116	0	0	0	6	1085	64	101	858	0
User Adj:	1.00	1.00	1.00	1.00	1.00	1.00	1.00	1.00	1.00	1.00	1.00	1.00
PHF Adj:	1.00	1.00	1.00	1.00	1.00	1.00	1.00	1.00	1.00	1.00	1.00	1.00
PHF Volume:	46	0	116	0	0	0	6	1085	64	101	858	0
Reduct Vol:	0	0	0	0	0	0	0	0	0	0	0	0
Reduced Vol:	46	0	116	0	0	0	6	1085	64	101	858	0
PCE Adj:	1.00	1.00	1.00	1.00	1.00	1.00	1.00	1.00	1.00	1.00	1.00	1.00
MLF Adj:	1.00	1.00	1.00	1.00	1.00	1.00	1.00	1.00	1.00	1.00	1.00	1.00
FinalVolume:	46	0	116	0	0	0	6	1085	64	101	858	0
Saturation Flow Module:												
Sat/Lane:	1600	1600	1600	1600	1600	1600	1600	1600	1600	1600	1600	1600
Adjustment:	1.00	1.00	1.00	1.00	1.00	1.00	1.00	1.00	1.00	1.00	1.00	1.00
Lanes:	2.00	0.00	1.00	0.00	0.00	0.00	1.00	2.00	1.00	1.00	3.00	0.00
Final Sat.:	3200	0	1600	0	0	0	1600	3200	1600	1600	4800	0
Capacity Analysis Module:												
Vol/Sat:	0.01	0.00	0.07	0.00	0.00	0.00	0.00	0.34	0.04	0.06	0.18	0.00
Crit Moves:			****					****		****		

Newport Banning Ranch
Year 2016 without Project - TPO Analysis
AM Peak Hour

Level Of Service Computation Report
ICU 1(Loss as Cycle Length %) Method (Future Volume Alternative)

Intersection #33 Harbor Blvd/19th St

Cycle (sec):	100	Critical Vol./Cap.(X):	0.428
Loss Time (sec):	0 (Y+R=4.0 sec)	Average Delay (sec/veh):	xxxxxx
Optimal Cycle:	40	Level Of Service:	A

Street Name:	Harbor Boulevard						19th Street					
Approach:	North Bound			South Bound			East Bound			West Bound		
Movement:	L - T - R			L - T - R			L - T - R			L - T - R		
Control:	Protected			Protected			Protected			Protected		
Rights:	Include			Include			Include			Include		
Min. Green:	0	0	0	0	0	0	0	0	0	0	0	0
Lanes:	1 0 2	1 0		1 0 2	0 1		2 0 2	1 0		1 0 3	0 1	
Volume Module:												
Base Vol:	18	287	14	141	425	260	216	928	37	36	630	161
Growth Adj:	1.07	1.07	1.07	1.07	1.07	1.07	1.07	1.07	1.07	1.07	1.07	1.07
Initial Bse:	19	308	15	151	456	279	232	995	40	39	675	173
Added Vol:	0	0	0	0	0	0	0	0	0	0	0	0
Committed P:	3	5	0	0	6	0	0	0	2	0	0	0
Initial Fut:	22	313	15	151	462	279	232	995	42	39	675	173
User Adj:	1.00	1.00	1.00	1.00	1.00	1.00	1.00	1.00	1.00	1.00	1.00	1.00
PHF Adj:	1.00	1.00	1.00	1.00	1.00	1.00	1.00	1.00	1.00	1.00	1.00	1.00
PHF Volume:	22	313	15	151	462	279	232	995	42	39	675	173
Reduct Vol:	0	0	0	0	0	0	0	0	0	0	0	0
Reduced Vol:	22	313	15	151	462	279	232	995	42	39	675	173
PCE Adj:	1.00	1.00	1.00	1.00	1.00	1.00	1.00	1.00	1.00	1.00	1.00	1.00
MLF Adj:	1.00	1.00	1.00	1.00	1.00	1.00	1.00	1.00	1.00	1.00	1.00	1.00
FinalVolume:	22	313	15	151	462	279	232	995	42	39	675	173
Saturation Flow Module:												
Sat/Lane:	1600	1600	1600	1600	1600	1600	1600	1600	1600	1600	1600	1600
Adjustment:	1.00	1.00	1.00	1.00	1.00	1.00	1.00	1.00	1.00	1.00	1.00	1.00
Lanes:	1.00	2.86	0.14	1.00	2.00	1.00	2.00	2.88	0.12	1.00	3.00	1.00
Final Sat.:	1600	4580	220	1600	3200	1600	3200	4607	193	1600	4800	1600
Capacity Analysis Module:												
Vol/Sat:	0.01	0.07	0.07	0.09	0.14	0.17	0.07	0.22	0.22	0.02	0.14	0.11
Crit Moves:	****					****		****		****		

Newport Banning Ranch
Year 2016 without Project - TPO Analysis
AM Peak Hour

Level Of Service Computation Report
ICU 1(Loss as Cycle Length %) Method (Future Volume Alternative)

Intersection #34 Newport Blvd/19th St

Cycle (sec):	120	Critical Vol./Cap.(X):	0.856
Loss Time (sec):	0 (Y+R=4.0 sec)	Average Delay (sec/veh):	xxxxxx
Optimal Cycle:	158	Level Of Service:	D

Street Name:	Newport Boulevard									19th Street								
Approach:	North Bound			South Bound			East Bound			West Bound		
Movement:	L	- T	- R	L	- T	- R	L	- T	- R	L	- T	- R
Control:	Protected			Protected			Split Phase			Split Phase		
Rights:	Include			Include			Include			Include		
Min. Green:	0	0	0	0	0	0	0	0	0	0	0	0
Lanes:	1 0	3 1	0	1 0	3 1	1	2 1	1 0	1	1 0	2 1	1
Volume Module:												
Base Vol:	31	2709	9	181	2440	486	886	183	14	21	162	237
Growth Adj:	1.07	1.07	1.07	1.07	1.07	1.07	1.07	1.07	1.07	1.07	1.07	1.07
Initial Bse:	33	2904	10	194	2616	521	950	196	15	23	174	254
Added Vol:	0	0	0	0	0	0	0	0	0	0	0	0
Committed P:	0	12	1	0	9	0	0	0	2	0	0	0
Initial Fut:	33	2916	11	194	2625	521	950	196	17	23	174	254
User Adj:	1.00	1.00	1.00	1.00	1.00	1.00	1.00	1.00	1.00	1.00	1.00	1.00
PHF Adj:	1.00	1.00	1.00	1.00	1.00	1.00	1.00	1.00	1.00	1.00	1.00	1.00
PHF Volume:	33	2916	11	194	2625	521	950	196	17	23	174	254
Reduct Vol:	0	0	0	0	0	0	0	0	0	0	0	0
Reduced Vol:	33	2916	11	194	2625	521	950	196	17	23	174	254
PCE Adj:	1.00	1.00	1.00	1.00	1.00	1.00	1.00	1.00	1.00	1.00	1.00	1.00
MLF Adj:	1.00	1.00	1.00	1.00	1.00	1.00	1.00	1.00	1.00	1.00	1.00	1.00
FinalVolume:	33	2916	11	194	2625	521	950	196	17	23	174	254
Saturation Flow Module:												
Sat/Lane:	1600	1600	1600	1600	1600	1600	1600	1600	1600	1600	1600	1600
Adjustment:	1.00	1.00	1.00	1.00	1.00	1.00	1.00	1.00	1.00	1.00	1.00	1.00
Lanes:	1.00	3.99	0.01	1.00	4.00	1.00	3.00	1.00	1.00	1.00	2.00	2.00
Final Sat.:	1600	6377	23	1600	6400	1600	4800	1600	1600	1600	3200	3200
Capacity Analysis Module:												
Vol/Sat:	0.02	0.46	0.46	0.12	0.41	0.33	0.20	0.12	0.01	0.01	0.05	0.08
Crit Moves:		****		****			****					****

Newport Banning Ranch
Year 2016 without Project - TPO Analysis
AM Peak Hour

Level Of Service Computation Report
ICU 1(Loss as Cycle Length %) Method (Future Volume Alternative)

Intersection #35 Newport Blvd/Broadway

Cycle (sec):	120	Critical Vol./Cap.(X):	0.621
Loss Time (sec):	0 (Y+R=4.0 sec)	Average Delay (sec/veh):	xxxxxx
Optimal Cycle:	49	Level Of Service:	B

Street Name:	Newport Boulevard									Broadway								
Approach:	North Bound			South Bound			East Bound			West Bound		
Movement:	L - T - R			L - T - R			L - T - R			L - T - R		
Control:	Protected			Protected			Permitted			Permitted		
Rights:	Include			Include			Include			Include		
Min. Green:	0	0	0	0	0	0	0	0	0	0	0	0
Lanes:	1 0 3	1 0		1 0 3	0 1		0 1 0	0 1		1 0 0	1 0	
Volume Module:												
Base Vol:	4	2678	8	60	2396	7	6	9	3	38	12	102
Growth Adj:	1.07	1.07	1.07	1.07	1.07	1.07	1.07	1.07	1.07	1.07	1.07	1.07
Initial Bse:	4	2871	9	64	2569	8	6	10	3	41	13	109
Added Vol:	0	0	0	0	0	0	0	0	0	0	0	0
Committed P:	0	14	1	0	12	0	0	0	0	0	0	0
Initial Fut:	4	2885	10	64	2581	8	6	10	3	41	13	109
User Adj:	1.00	1.00	1.00	1.00	1.00	1.00	1.00	1.00	1.00	1.00	1.00	1.00
PHF Adj:	1.00	1.00	1.00	1.00	1.00	1.00	1.00	1.00	1.00	1.00	1.00	1.00
PHF Volume:	4	2885	10	64	2581	8	6	10	3	41	13	109
Reduct Vol:	0	0	0	0	0	0	0	0	0	0	0	0
Reduced Vol:	4	2885	10	64	2581	8	6	10	3	41	13	109
PCE Adj:	1.00	1.00	1.00	1.00	1.00	1.00	1.00	1.00	1.00	1.00	1.00	1.00
MLF Adj:	1.00	1.00	1.00	1.00	1.00	1.00	1.00	1.00	1.00	1.00	1.00	1.00
FinalVolume:	4	2885	10	64	2581	8	6	10	3	41	13	109
Saturation Flow Module:												
Sat/Lane:	1600	1600	1600	1600	1600	1600	1600	1600	1600	1600	1600	1600
Adjustment:	1.00	1.00	1.00	1.00	1.00	1.00	1.00	1.00	1.00	1.00	1.00	1.00
Lanes:	1.00	3.99	0.01	1.00	3.00	1.00	0.40	0.60	1.00	1.00	0.11	0.89
Final Sat.:	1600	6379	21	1600	4800	1600	640	960	1600	1600	168	1432
Capacity Analysis Module:												
Vol/Sat:	0.00	0.45	0.45	0.04	0.54	0.00	0.00	0.01	0.00	0.03	0.08	0.08
Crit Moves:	****				****		****				****	

Newport Banning Ranch
Year 2016 without Project - TPO Analysis
AM Peak Hour

Level Of Service Computation Report
ICU 1(Loss as Cycle Length %) Method (Future Volume Alternative)

Intersection #36 Newport Blvd/Harbor Blvd

Cycle (sec):	120	Critical Vol./Cap.(X):	0.753
Loss Time (sec):	0 (Y+R=4.0 sec)	Average Delay (sec/veh):	xxxxxx
Optimal Cycle:	92	Level Of Service:	C

Street Name:	Newport Boulevard						Harbor Boulevard					
Approach:	North Bound			South Bound			East Bound			West Bound		
Movement:	L - T - R			L - T - R			L - T - R			L - T - R		
Control:	Protected			Protected			Protected			Protected		
Rights:	Include			Include			Ovl			Include		
Min. Green:	0	0	0	0	0	0	0	0	0	0	0	0
Lanes:	2 0 4 0 0			0 0 2 1 0			1 0 0 0 2			0 0 0 0 0		
Volume Module:												
Base Vol:	317	2653	0	0	2559	49	26	0	486	0	0	0
Growth Adj:	1.07	1.07	1.07	1.07	1.07	1.07	1.07	1.07	1.07	1.07	1.07	1.07
Initial Bse:	340	2844	0	0	2743	53	28	0	521	0	0	0
Added Vol:	0	0	0	0	0	0	0	0	0	0	0	0
Committed P:	13	17	0	0	14	0	0	0	14	0	0	0
Initial Fut:	353	2861	0	0	2757	53	28	0	535	0	0	0
User Adj:	1.00	1.00	1.00	1.00	1.00	1.00	1.00	1.00	1.00	1.00	1.00	1.00
PHF Adj:	1.00	1.00	1.00	1.00	1.00	1.00	1.00	1.00	1.00	1.00	1.00	1.00
PHF Volume:	353	2861	0	0	2757	53	28	0	535	0	0	0
Reduct Vol:	0	0	0	0	0	0	0	0	0	0	0	0
Reduced Vol:	353	2861	0	0	2757	53	28	0	535	0	0	0
PCE Adj:	1.00	1.00	1.00	1.00	1.00	1.00	1.00	1.00	1.00	1.00	1.00	1.00
MLF Adj:	1.00	1.00	1.00	1.00	1.00	1.00	1.00	1.00	1.00	1.00	1.00	1.00
FinalVolume:	353	2861	0	0	2757	53	28	0	535	0	0	0
OvlAdjVol:									182			
Saturation Flow Module:												
Sat/Lane:	1600	1600	1600	1600	1600	1600	1600	1600	1600	1600	1600	1600
Adjustment:	1.00	1.00	1.00	1.00	1.00	1.00	1.00	1.00	1.00	1.00	1.00	1.00
Lanes:	2.00	4.00	0.00	0.00	2.94	0.06	1.00	0.00	2.00	0.00	0.00	0.00
Final Sat.:	3200	6400	0	0	4710	90	1600	0	3200	0	0	0
Capacity Analysis Module:												
Vol/Sat:	0.11	0.45	0.00	0.00	0.59	0.59	0.02	0.00	0.17	0.00	0.00	0.00
OvlAdjV/S:									0.06			
Crit Moves:	****				****				****			

Newport Banning Ranch
Year 2016 without Project - TPO Analysis
AM Peak Hour

Level Of Service Computation Report
ICU 1(Loss as Cycle Length %) Method (Future Volume Alternative)

Intersection #37 Newport Blvd/18th St (Rochester St)

Cycle (sec):	120	Critical Vol./Cap.(X):	0.792
Loss Time (sec):	0 (Y+R=4.0 sec)	Average Delay (sec/veh):	xxxxxx
Optimal Cycle:	110	Level Of Service:	C

Street Name:	Newport Boulevard						18th Street (Rochester Street)					
Approach:	North Bound			South Bound			East Bound			West Bound		
Movement:	L - T - R			L - T - R			L - T - R			L - T - R		
Control:	Protected			Protected			Split Phase			Split Phase		
Rights:	Include			Include			Include			Include		
Min. Green:	0	0	0	0	0	0	0	0	0	0	0	0
Lanes:	1 0 3	1 0		1 0 3	0 1		2 0 1	0 1		1 0 0	1 0	
Volume Module:												
Base Vol:	64	2852	7	85	2743	165	179	81	26	7	68	30
Growth Adj:	1.07	1.07	1.07	1.07	1.07	1.07	1.07	1.07	1.07	1.07	1.07	1.07
Initial Bse:	69	3057	8	91	2940	177	192	87	28	8	73	32
Added Vol:	0	0	0	0	0	0	0	0	0	0	0	0
Committed P:	6	35	0	0	35	0	0	0	15	0	0	0
Initial Fut:	75	3092	8	91	2975	177	192	87	43	8	73	32
User Adj:	1.00	1.00	1.00	1.00	1.00	1.00	1.00	1.00	1.00	1.00	1.00	1.00
PHF Adj:	1.00	1.00	1.00	1.00	1.00	1.00	1.00	1.00	1.00	1.00	1.00	1.00
PHF Volume:	75	3092	8	91	2975	177	192	87	43	8	73	32
Reduct Vol:	0	0	0	0	0	0	0	0	0	0	0	0
Reduced Vol:	75	3092	8	91	2975	177	192	87	43	8	73	32
PCE Adj:	1.00	1.00	1.00	1.00	1.00	1.00	1.00	1.00	1.00	1.00	1.00	1.00
MLF Adj:	1.00	1.00	1.00	1.00	1.00	1.00	1.00	1.00	1.00	1.00	1.00	1.00
FinalVolume:	75	3092	8	91	2975	177	192	87	43	8	73	32
Saturation Flow Module:												
Sat/Lane:	1600	1600	1600	1600	1600	1600	1600	1600	1600	1600	1600	1600
Adjustment:	1.00	1.00	1.00	1.00	1.00	1.00	1.00	1.00	1.00	1.00	1.00	1.00
Lanes:	1.00	3.99	0.01	1.00	3.00	1.00	2.00	1.00	1.00	1.00	0.69	0.31
Final Sat.:	1600	6385	15	1600	4800	1600	3200	1600	1600	1600	1110	490
Capacity Analysis Module:												
Vol/Sat:	0.05	0.48	0.48	0.06	0.62	0.11	0.06	0.05	0.03	0.00	0.07	0.07
Crit Moves:	****				****		****				****	

Newport Banning Ranch
Year 2016 without Project - TPO Analysis
AM Peak Hour

Level Of Service Computation Report
ICU 1(Loss as Cycle Length %) Method (Future Volume Alternative)

Intersection #38 Placentia Ave/18th St

Cycle (sec):	100	Critical Vol./Cap.(X):	0.472
Loss Time (sec):	0 (Y+R=4.0 sec)	Average Delay (sec/veh):	xxxxxx
Optimal Cycle:	35	Level Of Service:	A

Street Name:	Placentia Avenue						18th Street					
Approach:	North Bound			South Bound			East Bound			West Bound		
Movement:	L - T - R			L - T - R			L - T - R			L - T - R		
Control:	Protected			Protected			Permitted			Permitted		
Rights:	Include			Include			Include			Include		
Min. Green:	0	0	0	0	0	0	0	0	0	0	0	0
Lanes:	1 0	1 1	0	1 0	1 1	0	1 0	0 1	0	1 0	0 1	0
Volume Module:												
Base Vol:	25	488	23	38	725	106	46	120	27	41	173	45
Growth Adj:	1.07	1.07	1.07	1.07	1.07	1.07	1.07	1.07	1.07	1.07	1.07	1.07
Initial Bse:	27	523	25	41	777	114	49	129	29	44	185	48
Added Vol:	0	0	0	0	0	0	0	0	0	0	0	0
Committed P:	0	4	0	0	0	0	0	0	0	0	0	0
Initial Fut:	27	527	25	41	777	114	49	129	29	44	185	48
User Adj:	1.00	1.00	1.00	1.00	1.00	1.00	1.00	1.00	1.00	1.00	1.00	1.00
PHF Adj:	1.00	1.00	1.00	1.00	1.00	1.00	1.00	1.00	1.00	1.00	1.00	1.00
PHF Volume:	27	527	25	41	777	114	49	129	29	44	185	48
Reduct Vol:	0	0	0	0	0	0	0	0	0	0	0	0
Reduced Vol:	27	527	25	41	777	114	49	129	29	44	185	48
PCE Adj:	1.00	1.00	1.00	1.00	1.00	1.00	1.00	1.00	1.00	1.00	1.00	1.00
MLF Adj:	1.00	1.00	1.00	1.00	1.00	1.00	1.00	1.00	1.00	1.00	1.00	1.00
FinalVolume:	27	527	25	41	777	114	49	129	29	44	185	48
Saturation Flow Module:												
Sat/Lane:	1600	1600	1600	1600	1600	1600	1600	1600	1600	1600	1600	1600
Adjustment:	1.00	1.00	1.00	1.00	1.00	1.00	1.00	1.00	1.00	1.00	1.00	1.00
Lanes:	1.00	1.91	0.09	1.00	1.74	0.26	1.00	0.82	0.18	1.00	0.79	0.21
Final Sat.:	1600	3057	143	1600	2792	408	1600	1306	294	1600	1270	330
Capacity Analysis Module:												
Vol/Sat:	0.02	0.17	0.17	0.03	0.28	0.28	0.03	0.10	0.10	0.03	0.15	0.15
Crit Moves:	****				****		****				****	

Newport Banning Ranch
Year 2016 without Project - TPO Analysis
AM Peak Hour

Level Of Service Computation Report
2000 HCM 4-Way Stop Method (Future Volume Alternative)

Intersection #39 Whittier Ave/17th St

Cycle (sec):	100	Critical Vol./Cap.(X):	0.118
Loss Time (sec):	0 (Y+R=4.0 sec)	Average Delay (sec/veh):	7.4
Optimal Cycle:	0	Level Of Service:	A

Street Name:	Whittier Avenue						17th St					
Approach:	North Bound			South Bound			East Bound			West Bound		
Movement:	L -	T -	R	L -	T -	R	L -	T -	R	L -	T -	R
Control:	Stop Sign			Stop Sign			Stop Sign			Stop Sign		
Rights:	Include			Include			Include			Include		
Min. Green:	0	0	0	0	0	0	0	0	0	0	0	0
Lanes:	0 0	0 1	0	0 0	1! 0	0	0 0	1! 0	0	0 0	1! 0	0
Volume Module:												
Base Vol:	0	35	2	24	23	53	56	2	5	1	0	24
Growth Adj:	1.07	1.07	1.07	1.07	1.07	1.07	1.07	1.07	1.07	1.07	1.07	1.07
Initial Bse:	0	38	2	26	25	57	60	2	5	1	0	26
Added Vol:	0	0	0	0	0	0	0	0	0	0	0	0
Committed P:	0	0	0	0	0	0	0	0	0	0	0	0
Initial Fut:	0	38	2	26	25	57	60	2	5	1	0	26
User Adj:	1.00	1.00	1.00	1.00	1.00	1.00	1.00	1.00	1.00	1.00	1.00	1.00
PHF Adj:	1.00	1.00	1.00	1.00	1.00	1.00	1.00	1.00	1.00	1.00	1.00	1.00
PHF Volume:	0	38	2	26	25	57	60	2	5	1	0	26
Reduct Vol:	0	0	0	0	0	0	0	0	0	0	0	0
Reduced Vol:	0	38	2	26	25	57	60	2	5	1	0	26
PCE Adj:	1.00	1.00	1.00	1.00	1.00	1.00	1.00	1.00	1.00	1.00	1.00	1.00
MLF Adj:	1.00	1.00	1.00	1.00	1.00	1.00	1.00	1.00	1.00	1.00	1.00	1.00
FinalVolume:	0	38	2	26	25	57	60	2	5	1	0	26
Saturation Flow Module:												
Adjustment:	1.00	1.00	1.00	1.00	1.00	1.00	1.00	1.00	1.00	1.00	1.00	1.00
Lanes:	0.00	0.95	0.05	0.24	0.23	0.53	0.89	0.03	0.08	0.04	0.00	0.96
Final Sat.:	0	797	46	218	209	482	714	25	64	37	0	898
Capacity Analysis Module:												
Vol/Sat:	xxxx	0.05	0.05	0.12	0.12	0.12	0.08	0.08	0.08	0.03	xxxx	0.03
Crit Moves:		****			****			****			****	
Delay/Veh:	0.0	7.4	7.4	7.4	7.4	7.4	7.7	7.7	7.7	6.8	0.0	6.8
Delay Adj:	1.00	1.00	1.00	1.00	1.00	1.00	1.00	1.00	1.00	1.00	1.00	1.00
AdjDel/Veh:	0.0	7.4	7.4	7.4	7.4	7.4	7.7	7.7	7.7	6.8	0.0	6.8
LOS by Move:	*	A	A	A	A	A	A	A	A	A	*	A
ApproachDel:		7.4			7.4			7.7			6.8	
Delay Adj:		1.00			1.00			1.00			1.00	
ApprAdjDel:		7.4			7.4			7.7			6.8	
LOS by Appr:		A			A			A			A	
AllWayAvgQ:	0.0	0.0	0.0	0.1	0.1	0.1	0.1	0.1	0.1	0.0	0.0	0.0

Newport Banning Ranch
Year 2016 without Project - TPO Analysis
AM Peak Hour

Note: Queue reported is the number of cars per lane.

Newport Banning Ranch
Year 2016 without Project - TPO Analysis
AM Peak Hour

Level Of Service Computation Report
2000 HCM 4-Way Stop Method (Future Volume Alternative)

Intersection #40 Monrovia Ave/17th St

Cycle (sec):	100	Critical Vol./Cap.(X):	0.388
Loss Time (sec):	0 (Y+R=4.0 sec)	Average Delay (sec/veh):	9.9
Optimal Cycle:	0	Level Of Service:	A

Street Name:	Monrovia Avenue						17th Street					
Approach:	North Bound			South Bound			East Bound			West Bound		
Movement:	L -	T -	R	L -	T -	R	L -	T -	R	L -	T -	R
Control:	Stop Sign			Stop Sign			Stop Sign			Stop Sign		
Rights:	Include			Include			Include			Include		
Min. Green:	0	0	0	0	0	0	0	0	0	0	0	0
Lanes:	0 0	1! 0	0	0 0	1! 0	0	0 0	1! 0	0	0 0	1! 0	0
Volume Module:												
Base Vol:	36	88	63	26	86	12	14	75	32	67	135	56
Growth Adj:	1.07	1.07	1.07	1.07	1.07	1.07	1.07	1.07	1.07	1.07	1.07	1.07
Initial Bse:	39	94	68	28	92	13	15	80	34	72	145	60
Added Vol:	0	0	0	0	0	0	0	0	0	0	0	0
Committed P:	0	0	0	0	0	0	0	0	0	0	0	0
Initial Fut:	39	94	68	28	92	13	15	80	34	72	145	60
User Adj:	1.00	1.00	1.00	1.00	1.00	1.00	1.00	1.00	1.00	1.00	1.00	1.00
PHF Adj:	1.00	1.00	1.00	1.00	1.00	1.00	1.00	1.00	1.00	1.00	1.00	1.00
PHF Volume:	39	94	68	28	92	13	15	80	34	72	145	60
Reduct Vol:	0	0	0	0	0	0	0	0	0	0	0	0
Reduced Vol:	39	94	68	28	92	13	15	80	34	72	145	60
PCE Adj:	1.00	1.00	1.00	1.00	1.00	1.00	1.00	1.00	1.00	1.00	1.00	1.00
MLF Adj:	1.00	1.00	1.00	1.00	1.00	1.00	1.00	1.00	1.00	1.00	1.00	1.00
FinalVolume:	39	94	68	28	92	13	15	80	34	72	145	60
Saturation Flow Module:												
Adjustment:	1.00	1.00	1.00	1.00	1.00	1.00	1.00	1.00	1.00	1.00	1.00	1.00
Lanes:	0.19	0.47	0.34	0.21	0.69	0.10	0.12	0.62	0.26	0.26	0.52	0.22
Final Sat.:	133	324	232	136	451	63	78	420	179	185	373	155
Capacity Analysis Module:												
Vol/Sat:	0.29	0.29	0.29	0.20	0.20	0.20	0.19	0.19	0.19	0.39	0.39	0.39
Crit Moves:		****		****				****			****	
Delay/Veh:	9.7	9.7	9.7	9.3	9.3	9.3	9.0	9.0	9.0	10.6	10.6	10.6
Delay Adj:	1.00	1.00	1.00	1.00	1.00	1.00	1.00	1.00	1.00	1.00	1.00	1.00
AdjDel/Veh:	9.7	9.7	9.7	9.3	9.3	9.3	9.0	9.0	9.0	10.6	10.6	10.6
LOS by Move:	A	A	A	A	A	A	A	A	A	B	B	B
ApproachDel:		9.7			9.3			9.0			10.6	
Delay Adj:		1.00			1.00			1.00			1.00	
ApprAdjDel:		9.7			9.3			9.0			10.6	
LOS by Appr:		A			A			A			B	
AllWayAvgQ:	0.3	0.3	0.3	0.2	0.2	0.2	0.2	0.2	0.2	0.6	0.6	0.6

Newport Banning Ranch
Year 2016 without Project - TPO Analysis
AM Peak Hour

Note: Queue reported is the number of cars per lane.

Newport Banning Ranch
Year 2016 without Project - TPO Analysis
AM Peak Hour

Level Of Service Computation Report
ICU 1(Loss as Cycle Length %) Method (Future Volume Alternative)

Intersection #41 Placentia Ave/17th St

Cycle (sec):	100	Critical Vol./Cap.(X):	0.438
Loss Time (sec):	0 (Y+R=4.0 sec)	Average Delay (sec/veh):	xxxxxx
Optimal Cycle:	26	Level Of Service:	A

Street Name:	Placentia Avenue						17th St					
Approach:	North Bound			South Bound			East Bound			West Bound		
Movement:	L - T - R			L - T - R			L - T - R			L - T - R		
Control:	Permitted			Permitted			Permitted			Permitted		
Rights:	Include			Include			Include			Include		
Min. Green:	0	0	0	0	0	0	0	0	0	0	0	0
Lanes:	1 0 1	1 0		1 0 1	1 0		1 0 0	1 0		1 0 0	1 0	
Volume Module:												
Base Vol:	89	378	59	166	537	77	12	141	31	44	162	80
Growth Adj:	1.07	1.07	1.07	1.07	1.07	1.07	1.07	1.07	1.07	1.07	1.07	1.07
Initial Bse:	95	405	63	178	576	83	13	151	33	47	174	86
Added Vol:	0	0	0	0	0	0	0	0	0	0	0	0
Committed P:	3	5	3	0	2	0	0	0	0	0	0	0
Initial Fut:	98	410	66	178	578	83	13	151	33	47	174	86
User Adj:	1.00	1.00	1.00	1.00	1.00	1.00	1.00	1.00	1.00	1.00	1.00	1.00
PHF Adj:	1.00	1.00	1.00	1.00	1.00	1.00	1.00	1.00	1.00	1.00	1.00	1.00
PHF Volume:	98	410	66	178	578	83	13	151	33	47	174	86
Reduct Vol:	0	0	0	0	0	0	0	0	0	0	0	0
Reduced Vol:	98	410	66	178	578	83	13	151	33	47	174	86
PCE Adj:	1.00	1.00	1.00	1.00	1.00	1.00	1.00	1.00	1.00	1.00	1.00	1.00
MLF Adj:	1.00	1.00	1.00	1.00	1.00	1.00	1.00	1.00	1.00	1.00	1.00	1.00
FinalVolume:	98	410	66	178	578	83	13	151	33	47	174	86
Saturation Flow Module:												
Sat/Lane:	1600	1600	1600	1600	1600	1600	1600	1600	1600	1600	1600	1600
Adjustment:	1.00	1.00	1.00	1.00	1.00	1.00	1.00	1.00	1.00	1.00	1.00	1.00
Lanes:	1.00	1.72	0.28	1.00	1.75	0.25	1.00	0.82	0.18	1.00	0.67	0.33
Final Sat.:	1600	2755	445	1600	2800	400	1600	1312	288	1600	1071	529
Capacity Analysis Module:												
Vol/Sat:	0.06	0.15	0.15	0.11	0.21	0.21	0.01	0.12	0.12	0.03	0.16	0.16
Crit Moves:	****				****		****				****	

Newport Banning Ranch
Year 2016 without Project - TPO Analysis
AM Peak Hour

Level Of Service Computation Report
2000 HCM 4-Way Stop Method (Future Volume Alternative)

Intersection #42 Pomona Ave/17th St

Cycle (sec):	100	Critical Vol./Cap.(X):	0.623
Loss Time (sec):	0 (Y+R=4.0 sec)	Average Delay (sec/veh):	14.8
Optimal Cycle:	0	Level Of Service:	B

Street Name:	Pomona Avenue						17th Street					
Approach:	North Bound			South Bound			East Bound			West Bound		
Movement:	L -	T -	R	L -	T -	R	L -	T -	R	L -	T -	R
Control:	Stop Sign			Stop Sign			Stop Sign			Stop Sign		
Rights:	Include			Include			Include			Include		
Min. Green:	0	0	0	0	0	0	0	0	0	0	0	0
Lanes:	0 0	1! 0	0	0 0	1! 0	0	1 0	0 1	0	1 0	1 0	1
Volume Module:												
Base Vol:	6	40	19	101	116	59	12	303	29	60	273	53
Growth Adj:	1.07	1.07	1.07	1.07	1.07	1.07	1.07	1.07	1.07	1.07	1.07	1.07
Initial Bse:	6	43	20	108	124	63	13	325	31	64	293	57
Added Vol:	0	0	0	0	0	0	0	0	0	0	0	0
Committed P:	0	0	0	0	0	0	0	0	0	0	0	0
Initial Fut:	6	43	20	108	124	63	13	325	31	64	293	57
User Adj:	1.00	1.00	1.00	1.00	1.00	1.00	1.00	1.00	1.00	1.00	1.00	1.00
PHF Adj:	1.00	1.00	1.00	1.00	1.00	1.00	1.00	1.00	1.00	1.00	1.00	1.00
PHF Volume:	6	43	20	108	124	63	13	325	31	64	293	57
Reduct Vol:	0	0	0	0	0	0	0	0	0	0	0	0
Reduced Vol:	6	43	20	108	124	63	13	325	31	64	293	57
PCE Adj:	1.00	1.00	1.00	1.00	1.00	1.00	1.00	1.00	1.00	1.00	1.00	1.00
MLF Adj:	1.00	1.00	1.00	1.00	1.00	1.00	1.00	1.00	1.00	1.00	1.00	1.00
FinalVolume:	6	43	20	108	124	63	13	325	31	64	293	57
Saturation Flow Module:												
Adjustment:	1.00	1.00	1.00	1.00	1.00	1.00	1.00	1.00	1.00	1.00	1.00	1.00
Lanes:	0.09	0.62	0.29	0.37	0.42	0.21	1.00	0.91	0.09	1.00	1.00	1.00
Final Sat.:	45	298	142	208	238	121	521	521	50	524	567	633
Capacity Analysis Module:												
Vol/Sat:	0.14	0.14	0.14	0.52	0.52	0.52	0.02	0.62	0.62	0.12	0.52	0.09
Crit Moves:	****				****			****			****	
Delay/Veh:	10.3	10.3	10.3	14.7	14.7	14.7	9.5	17.7	17.7	10.2	14.8	8.6
Delay Adj:	1.00	1.00	1.00	1.00	1.00	1.00	1.00	1.00	1.00	1.00	1.00	1.00
AdjDel/Veh:	10.3	10.3	10.3	14.7	14.7	14.7	9.5	17.7	17.7	10.2	14.8	8.6
LOS by Move:	B	B	B	B	B	B	A	C	C	B	B	A
ApproachDel:	10.3			14.7			17.5			13.2		
Delay Adj:	1.00			1.00			1.00			1.00		
ApprAdjDel:	10.3			14.7			17.5			13.2		
LOS by Appr:	B			B			C			B		
AllWayAvgQ:	0.1	0.1	0.1	0.9	0.9	0.9	0.0	1.4	1.4	0.1	0.9	0.1

Newport Banning Ranch
Year 2016 without Project - TPO Analysis
AM Peak Hour

Note: Queue reported is the number of cars per lane.

Newport Banning Ranch
Year 2016 without Project - TPO Analysis
AM Peak Hour

Level Of Service Computation Report
ICU 1(Loss as Cycle Length %) Method (Future Volume Alternative)

Intersection #43 Superior Ave/17th St

Cycle (sec):	100	Critical Vol./Cap.(X):	0.698
Loss Time (sec):	0 (Y+R=4.0 sec)	Average Delay (sec/veh):	xxxxxx
Optimal Cycle:	75	Level Of Service:	B

Street Name:	Superior Avenue						17th Street					
Approach:	North Bound			South Bound			East Bound			West Bound		
Movement:	L - T - R			L - T - R			L - T - R			L - T - R		
Control:	Prot+Permit			Prot+Permit			Prot+Permit			Prot+Permit		
Rights:	Include			Include			Include			Include		
Min. Green:	0	0	0	0	0	0	0	0	0	0	0	0
Lanes:	1 0 0 1 1			1 0 1 1 0			1 0 1 1 0			1 0 1 1 0		
Volume Module:												
Base Vol:	39	123	703	49	213	39	8	386	35	363	366	48
Growth Adj:	1.07	1.07	1.07	1.07	1.07	1.07	1.07	1.07	1.07	1.07	1.07	1.07
Initial Bse:	42	132	754	53	228	42	9	414	38	389	392	51
Added Vol:	0	0	0	0	0	0	0	0	0	0	0	0
Committed P:	3	9	0	0	17	0	0	0	3	0	0	0
Initial Fut:	45	141	754	53	245	42	9	414	41	389	392	51
User Adj:	1.00	1.00	1.00	1.00	1.00	1.00	1.00	1.00	1.00	1.00	1.00	1.00
PHF Adj:	1.00	1.00	1.00	1.00	1.00	1.00	1.00	1.00	1.00	1.00	1.00	1.00
PHF Volume:	45	141	754	53	245	42	9	414	41	389	392	51
Reduct Vol:	0	0	0	0	0	0	0	0	0	0	0	0
Reduced Vol:	45	141	754	53	245	42	9	414	41	389	392	51
PCE Adj:	1.00	1.00	1.00	1.00	1.00	1.00	1.00	1.00	1.00	1.00	1.00	1.00
MLF Adj:	1.00	1.00	1.00	1.00	1.00	1.00	1.00	1.00	1.00	1.00	1.00	1.00
FinalVolume:	45	141	754	53	245	42	9	414	41	389	392	51
Saturation Flow Module:												
Sat/Lane:	1600	1600	1600	1600	1600	1600	1600	1600	1600	1600	1600	1600
Adjustment:	1.00	1.00	1.00	1.00	1.00	1.00	1.00	1.00	1.00	1.00	1.00	1.00
Lanes:	1.00	0.31	1.69	1.00	1.71	0.29	1.00	1.82	0.18	1.00	1.77	0.23
Final Sat.:	1600	504	2696	1600	2734	466	1600	2915	285	1600	2829	371
Capacity Analysis Module:												
Vol/Sat:	0.03	0.28	0.28	0.03	0.09	0.09	0.01	0.14	0.14	0.24	0.14	0.14
Crit Moves:		****		****				****		****		

Newport Banning Ranch
Year 2016 without Project - TPO Analysis
AM Peak Hour

Level Of Service Computation Report
ICU 1(Loss as Cycle Length %) Method (Future Volume Alternative)

Intersection #44 Newport Blvd/17th St

Cycle (sec):	120	Critical Vol./Cap.(X):	0.797
Loss Time (sec):	0 (Y+R=4.0 sec)	Average Delay (sec/veh):	xxxxxx
Optimal Cycle:	112	Level Of Service:	C

Street Name:	Newport Boulevard									17th Street								
Approach:	North Bound			South Bound			East Bound			West Bound		
Movement:	L - T - R			L - T - R			L - T - R			L - T - R		
Control:	Protected			Protected			Protected			Protected		
Rights:	Include			Include			Include			Include		
Min. Green:	0	0	0	0	0	0	0	0	0	0	0	0
Lanes:	1 0 3	1 0		2 0 3	0 1		3 0 1	1 0		2 0 3	0 1	
Volume Module:												
Base Vol:	50	1789	209	559	1808	328	759	396	3	142	400	147
Growth Adj:	1.07	1.07	1.07	1.07	1.07	1.07	1.07	1.07	1.07	1.07	1.07	1.07
Initial Bse:	54	1918	224	599	1938	352	814	425	3	152	429	158
Added Vol:	0	0	0	0	0	0	0	0	0	0	0	0
Committed P:	0	47	0	0	53	0	0	0	0	0	0	0
Initial Fut:	54	1965	224	599	1991	352	814	425	3	152	429	158
User Adj:	1.00	1.00	1.00	1.00	1.00	1.00	1.00	1.00	1.00	1.00	1.00	1.00
PHF Adj:	1.00	1.00	1.00	1.00	1.00	1.00	1.00	1.00	1.00	1.00	1.00	1.00
PHF Volume:	54	1965	224	599	1991	352	814	425	3	152	429	158
Reduct Vol:	0	0	0	0	0	0	0	0	0	0	0	0
Reduced Vol:	54	1965	224	599	1991	352	814	425	3	152	429	158
PCE Adj:	1.00	1.00	1.00	1.00	1.00	1.00	1.00	1.00	1.00	1.00	1.00	1.00
MLF Adj:	1.00	1.00	1.00	1.00	1.00	1.00	1.00	1.00	1.00	1.00	1.00	1.00
FinalVolume:	54	1965	224	599	1991	352	814	425	3	152	429	158
Saturation Flow Module:												
Sat/Lane:	1600	1600	1600	1600	1600	1600	1600	1600	1600	1600	1600	1600
Adjustment:	1.00	1.00	1.00	1.00	1.00	1.00	1.00	1.00	1.00	1.00	1.00	1.00
Lanes:	1.00	3.59	0.41	2.00	3.00	1.00	3.00	1.98	0.02	2.00	3.00	1.00
Final Sat.:	1600	5745	655	3200	4800	1600	4800	3176	24	3200	4800	1600
Capacity Analysis Module:												
Vol/Sat:	0.03	0.34	0.34	0.19	0.41	0.22	0.17	0.13	0.13	0.05	0.09	0.10
Crit Moves:		****		****			****					****

Newport Banning Ranch
Year 2016 without Project - TPO Analysis
AM Peak Hour

Level Of Service Computation Report
ICU 1(Loss as Cycle Length %) Method (Future Volume Alternative)

Intersection #45 Orange Ave/17th St

Cycle (sec):	100	Critical Vol./Cap.(X):	0.442
Loss Time (sec):	0 (Y+R=4.0 sec)	Average Delay (sec/veh):	xxxxxx
Optimal Cycle:	41	Level Of Service:	A

Street Name:	Orange Avenue						17th Street					
Approach:	North Bound			South Bound			East Bound			West Bound		
Movement:	L - T - R			L - T - R			L - T - R			L - T - R		
Control:	Prot+Permit			Prot+Permit			Prot+Permit			Prot+Permit		
Rights:	Include			Include			Include			Include		
Min. Green:	0	0	0	0	0	0	0	0	0	0	0	0
Lanes:	1 0 1	1 0		1 0 1	0 1		1 0 2	0 1		1 0 2	0 1	
Volume Module:												
Base Vol:	106	188	37	123	141	78	42	766	86	40	692	121
Growth Adj:	1.07	1.07	1.07	1.07	1.07	1.07	1.07	1.07	1.07	1.07	1.07	1.07
Initial Bse:	114	202	40	132	151	84	45	821	92	43	742	130
Added Vol:	0	0	0	0	0	0	0	0	0	0	0	0
Committed P:	0	0	0	0	0	0	0	1	0	1	2	1
Initial Fut:	114	202	40	132	151	84	45	822	92	44	744	131
User Adj:	1.00	1.00	1.00	1.00	1.00	1.00	1.00	1.00	1.00	1.00	1.00	1.00
PHF Adj:	1.00	1.00	1.00	1.00	1.00	1.00	1.00	1.00	1.00	1.00	1.00	1.00
PHF Volume:	114	202	40	132	151	84	45	822	92	44	744	131
Reduct Vol:	0	0	0	0	0	0	0	0	0	0	0	0
Reduced Vol:	114	202	40	132	151	84	45	822	92	44	744	131
PCE Adj:	1.00	1.00	1.00	1.00	1.00	1.00	1.00	1.00	1.00	1.00	1.00	1.00
MLF Adj:	1.00	1.00	1.00	1.00	1.00	1.00	1.00	1.00	1.00	1.00	1.00	1.00
FinalVolume:	114	202	40	132	151	84	45	822	92	44	744	131
Saturation Flow Module:												
Sat/Lane:	1600	1600	1600	1600	1600	1600	1600	1600	1600	1600	1600	1600
Adjustment:	1.00	1.00	1.00	1.00	1.00	1.00	1.00	1.00	1.00	1.00	1.00	1.00
Lanes:	1.00	1.67	0.33	1.00	1.00	1.00	1.00	2.00	1.00	1.00	2.00	1.00
Final Sat.:	1600	2674	526	1600	1600	1600	1600	3200	1600	1600	3200	1600
Capacity Analysis Module:												
Vol/Sat:	0.07	0.08	0.08	0.08	0.09	0.05	0.03	0.26	0.06	0.03	0.23	0.08
Crit Moves:		****		****				****		****		

Newport Banning Ranch
Year 2016 without Project - TPO Analysis
AM Peak Hour

Level Of Service Computation Report
ICU 1(Loss as Cycle Length %) Method (Future Volume Alternative)

Intersection #46 Santa Ana Ave/17th St

Cycle (sec):	100	Critical Vol./Cap.(X):	0.423
Loss Time (sec):	0 (Y+R=4.0 sec)	Average Delay (sec/veh):	xxxxxx
Optimal Cycle:	32	Level Of Service:	A

Street Name:	Santa Ana Avenue						17th Street					
Approach:	North Bound			South Bound			East Bound			West Bound		
Movement:	L - T - R			L - T - R			L - T - R			L - T - R		
Control:	Permitted			Permitted			Prot+Permit			Prot+Permit		
Rights:	Include			Include			Include			Include		
Min. Green:	0	0	0	0	0	0	0	0	0	0	0	0
Lanes:	1 0 1	0 1		1 0 1	0 1		1 0 2	0 1		1 0 2	0 1	
Volume Module:												
Base Vol:	89	120	70	74	106	62	34	787	41	40	761	58
Growth Adj:	1.07	1.07	1.07	1.07	1.07	1.07	1.07	1.07	1.07	1.07	1.07	1.07
Initial Bse:	95	129	75	79	114	66	36	844	44	43	816	62
Added Vol:	0	0	0	0	0	0	0	0	0	0	0	0
Committed P:	0	0	1	1	0	0	0	3	0	2	8	2
Initial Fut:	95	129	76	80	114	66	36	847	44	45	824	64
User Adj:	1.00	1.00	1.00	1.00	1.00	1.00	1.00	1.00	1.00	1.00	1.00	1.00
PHF Adj:	1.00	1.00	1.00	1.00	1.00	1.00	1.00	1.00	1.00	1.00	1.00	1.00
PHF Volume:	95	129	76	80	114	66	36	847	44	45	824	64
Reduct Vol:	0	0	0	0	0	0	0	0	0	0	0	0
Reduced Vol:	95	129	76	80	114	66	36	847	44	45	824	64
PCE Adj:	1.00	1.00	1.00	1.00	1.00	1.00	1.00	1.00	1.00	1.00	1.00	1.00
MLF Adj:	1.00	1.00	1.00	1.00	1.00	1.00	1.00	1.00	1.00	1.00	1.00	1.00
FinalVolume:	95	129	76	80	114	66	36	847	44	45	824	64
Saturation Flow Module:												
Sat/Lane:	1600	1600	1600	1600	1600	1600	1600	1600	1600	1600	1600	1600
Adjustment:	1.00	1.00	1.00	1.00	1.00	1.00	1.00	1.00	1.00	1.00	1.00	1.00
Lanes:	1.00	1.00	1.00	1.00	1.00	1.00	1.00	2.00	1.00	1.00	2.00	1.00
Final Sat.:	1600	1600	1600	1600	1600	1600	1600	3200	1600	1600	3200	1600
Capacity Analysis Module:												
Vol/Sat:	0.06	0.08	0.05	0.05	0.07	0.04	0.02	0.26	0.03	0.03	0.26	0.04
Crit Moves:	****				****			****		****		

Newport Banning Ranch
Year 2016 without Project - TPO Analysis
AM Peak Hour

Level Of Service Computation Report
ICU 1(Loss as Cycle Length %) Method (Future Volume Alternative)

Intersection #47 Tustin Ave/17th St

Cycle (sec):	100	Critical Vol./Cap.(X):	0.512
Loss Time (sec):	0 (Y+R=4.0 sec)	Average Delay (sec/veh):	xxxxxx
Optimal Cycle:	38	Level Of Service:	A

Street Name:	Tustin Avenue						17th Street					
Approach:	North Bound			South Bound			East Bound			West Bound		
Movement:	L - T - R			L - T - R			L - T - R			L - T - R		
Control:	Permitted			Permitted			Prot+Permit			Prot+Permit		
Rights:	Include			Include			Include			Include		
Min. Green:	0	0	0	0	0	0	0	0	0	0	0	0
Lanes:	1 0 0	1 0		1 0	1 0	1	1 0	1 1	0	1 0	1 1	0
Volume Module:												
Base Vol:	94	139	80	48	94	39	36	807	91	40	732	34
Growth Adj:	1.07	1.07	1.07	1.07	1.07	1.07	1.07	1.07	1.07	1.07	1.07	1.07
Initial Bse:	101	149	86	51	101	42	39	865	98	43	785	36
Added Vol:	0	0	0	0	0	0	0	0	0	0	0	0
Committed P:	0	0	2	2	0	0	0	7	0	2	14	2
Initial Fut:	101	149	88	53	101	42	39	872	98	45	799	38
User Adj:	1.00	1.00	1.00	1.00	1.00	1.00	1.00	1.00	1.00	1.00	1.00	1.00
PHF Adj:	1.00	1.00	1.00	1.00	1.00	1.00	1.00	1.00	1.00	1.00	1.00	1.00
PHF Volume:	101	149	88	53	101	42	39	872	98	45	799	38
Reduct Vol:	0	0	0	0	0	0	0	0	0	0	0	0
Reduced Vol:	101	149	88	53	101	42	39	872	98	45	799	38
PCE Adj:	1.00	1.00	1.00	1.00	1.00	1.00	1.00	1.00	1.00	1.00	1.00	1.00
MLF Adj:	1.00	1.00	1.00	1.00	1.00	1.00	1.00	1.00	1.00	1.00	1.00	1.00
FinalVolume:	101	149	88	53	101	42	39	872	98	45	799	38
Saturation Flow Module:												
Sat/Lane:	1600	1600	1600	1600	1600	1600	1600	1600	1600	1600	1600	1600
Adjustment:	1.00	1.00	1.00	1.00	1.00	1.00	1.00	1.00	1.00	1.00	1.00	1.00
Lanes:	1.00	0.63	0.37	1.00	1.00	1.00	1.00	1.80	0.20	1.00	1.91	0.09
Final Sat.:	1600	1007	593	1600	1600	1600	1600	2878	322	1600	3053	147
Capacity Analysis Module:												
Vol/Sat:	0.06	0.15	0.15	0.03	0.06	0.03	0.02	0.30	0.30	0.03	0.26	0.26
Crit Moves:		****		****				****		****		

Newport Banning Ranch
Year 2016 without Project - TPO Analysis
AM Peak Hour

Level Of Service Computation Report
ICU 1(Loss as Cycle Length %) Method (Future Volume Alternative)

Intersection #48 Irvine Ave/17th St

Cycle (sec):	100	Critical Vol./Cap.(X):	0.528
Loss Time (sec):	0 (Y+R=4.0 sec)	Average Delay (sec/veh):	xxxxxx
Optimal Cycle:	48	Level Of Service:	A

Street Name:	Irvine Avenue						17th Street					
Approach:	North Bound			South Bound			East Bound			West Bound		
Movement:	L - T - R			L - T - R			L - T - R			L - T - R		
Control:	Protected			Protected			Protected			Protected		
Rights:	Include			Include			Include			Include		
Min. Green:	0	0	0	0	0	0	0	0	0	0	0	0
Lanes:	2 0 2	0 1		2 0 2	0 1		2 0 1	1 0		1 0 1	1 0	
Volume Module:												
Base Vol:	274	590	35	203	458	127	209	489	217	33	299	40
Growth Adj:	1.07	1.07	1.07	1.07	1.07	1.07	1.07	1.07	1.07	1.07	1.07	1.07
Initial Bse:	294	632	38	218	491	136	224	524	233	35	321	43
Added Vol:	0	0	0	0	0	0	0	0	0	0	0	0
Committed P:	1	1	0	0	0	6	3	9	1	0	14	0
Initial Fut:	295	633	38	218	491	142	227	533	234	35	335	43
User Adj:	1.00	1.00	1.00	1.00	1.00	1.00	1.00	1.00	1.00	1.00	1.00	1.00
PHF Adj:	1.00	1.00	1.00	1.00	1.00	1.00	1.00	1.00	1.00	1.00	1.00	1.00
PHF Volume:	295	633	38	218	491	142	227	533	234	35	335	43
Reduct Vol:	0	0	0	0	0	0	0	0	0	0	0	0
Reduced Vol:	295	633	38	218	491	142	227	533	234	35	335	43
PCE Adj:	1.00	1.00	1.00	1.00	1.00	1.00	1.00	1.00	1.00	1.00	1.00	1.00
MLF Adj:	1.00	1.00	1.00	1.00	1.00	1.00	1.00	1.00	1.00	1.00	1.00	1.00
FinalVolume:	295	633	38	218	491	142	227	533	234	35	335	43
Saturation Flow Module:												
Sat/Lane:	1600	1600	1600	1600	1600	1600	1600	1600	1600	1600	1600	1600
Adjustment:	1.00	1.00	1.00	1.00	1.00	1.00	1.00	1.00	1.00	1.00	1.00	1.00
Lanes:	2.00	2.00	1.00	2.00	2.00	1.00	2.00	1.39	0.61	1.00	1.77	0.23
Final Sat.:	3200	3200	1600	3200	3200	1600	3200	2225	975	1600	2836	364
Capacity Analysis Module:												
Vol/Sat:	0.09	0.20	0.02	0.07	0.15	0.09	0.07	0.24	0.24	0.02	0.12	0.12
Crit Moves:		****		****				****		****		

Newport Banning Ranch
Year 2016 without Project - TPO Analysis
AM Peak Hour

Level Of Service Computation Report
ICU 1(Loss as Cycle Length %) Method (Future Volume Alternative)

Intersection #49 Placentia Ave/16th St

Cycle (sec):	100	Critical Vol./Cap.(X):	0.343
Loss Time (sec):	0 (Y+R=4.0 sec)	Average Delay (sec/veh):	xxxxxx
Optimal Cycle:	22	Level Of Service:	A

Street Name:	Placentia Avenue						16th Street					
Approach:	North Bound			South Bound			East Bound			West Bound		
Movement:	L - T - R			L - T - R			L - T - R			L - T - R		
Control:	Permitted			Permitted			Permitted			Permitted		
Rights:	Include			Include			Include			Include		
Min. Green:	0	0	0	0	0	0	0	0	0	0	0	0
Lanes:	1 0 1	1 0		1 0 1	1 0		1 0 0	1 0		1 0 0	1 0	
Volume Module:												
Base Vol:	76	454	36	70	442	88	26	57	31	17	105	35
Growth Adj:	1.07	1.07	1.07	1.07	1.07	1.07	1.07	1.07	1.07	1.07	1.07	1.07
Initial Bse:	81	487	39	75	474	94	28	61	33	18	113	38
Added Vol:	0	0	0	0	0	0	0	0	0	0	0	0
Committed P:	3	13	3	0	3	0	0	0	0	0	0	0
Initial Fut:	84	500	42	75	477	94	28	61	33	18	113	38
User Adj:	1.00	1.00	1.00	1.00	1.00	1.00	1.00	1.00	1.00	1.00	1.00	1.00
PHF Adj:	1.00	1.00	1.00	1.00	1.00	1.00	1.00	1.00	1.00	1.00	1.00	1.00
PHF Volume:	84	500	42	75	477	94	28	61	33	18	113	38
Reduct Vol:	0	0	0	0	0	0	0	0	0	0	0	0
Reduced Vol:	84	500	42	75	477	94	28	61	33	18	113	38
PCE Adj:	1.00	1.00	1.00	1.00	1.00	1.00	1.00	1.00	1.00	1.00	1.00	1.00
MLF Adj:	1.00	1.00	1.00	1.00	1.00	1.00	1.00	1.00	1.00	1.00	1.00	1.00
FinalVolume:	84	500	42	75	477	94	28	61	33	18	113	38
Saturation Flow Module:												
Sat/Lane:	1600	1600	1600	1600	1600	1600	1600	1600	1600	1600	1600	1600
Adjustment:	1.00	1.00	1.00	1.00	1.00	1.00	1.00	1.00	1.00	1.00	1.00	1.00
Lanes:	1.00	1.85	0.15	1.00	1.67	0.33	1.00	0.65	0.35	1.00	0.75	0.25
Final Sat.:	1600	2954	246	1600	2671	529	1600	1036	564	1600	1200	400
Capacity Analysis Module:												
Vol/Sat:	0.05	0.17	0.17	0.05	0.18	0.18	0.02	0.06	0.06	0.01	0.09	0.09
Crit Moves:	****				****		****				****	

Newport Banning Ranch
Year 2016 without Project - TPO Analysis
AM Peak Hour

Level Of Service Computation Report
ICU 1(Loss as Cycle Length %) Method (Future Volume Alternative)

Intersection #50 Superior Ave/16th St

Cycle (sec):	100	Critical Vol./Cap.(X):	0.488
Loss Time (sec):	0 (Y+R=4.0 sec)	Average Delay (sec/veh):	xxxxxx
Optimal Cycle:	28	Level Of Service:	A

Street Name:	Superior Avenue						16th Street					
Approach:	North Bound			South Bound			East Bound			West Bound		
Movement:	L - T - R			L - T - R			L - T - R			L - T - R		
Control:	Permitted			Permitted			Permitted			Permitted		
Rights:	Include			Include			Include			Include		
Min. Green:	0	0	0	0	0	0	0	0	0	0	0	0
Lanes:	1 0	2 0	1	1 0	1 1	0	1 0	1 0	0	0 1	0 0	1
Volume Module:												
Base Vol:	25	967	66	41	540	130	23	173	0	15	153	15
Growth Adj:	1.07	1.07	1.07	1.07	1.07	1.07	1.07	1.07	1.07	1.07	1.07	1.07
Initial Bse:	27	1037	71	44	579	139	25	185	0	16	164	16
Added Vol:	0	0	0	0	0	0	0	0	0	0	0	0
Committed P:	0	27	0	0	23	0	0	0	0	0	0	0
Initial Fut:	27	1064	71	44	602	139	25	185	0	16	164	16
User Adj:	1.00	1.00	1.00	1.00	1.00	1.00	1.00	1.00	1.00	1.00	1.00	1.00
PHF Adj:	1.00	1.00	1.00	1.00	1.00	1.00	1.00	1.00	1.00	1.00	1.00	1.00
PHF Volume:	27	1064	71	44	602	139	25	185	0	16	164	16
Reduct Vol:	0	0	0	0	0	0	0	0	0	0	0	0
Reduced Vol:	27	1064	71	44	602	139	25	185	0	16	164	16
PCE Adj:	1.00	1.00	1.00	1.00	1.00	1.00	1.00	1.00	1.00	1.00	1.00	1.00
MLF Adj:	1.00	1.00	1.00	1.00	1.00	1.00	1.00	1.00	1.00	1.00	1.00	1.00
FinalVolume:	27	1064	71	44	602	139	25	185	0	16	164	16
Saturation Flow Module:												
Sat/Lane:	1600	1600	1600	1600	1600	1600	1600	1600	1600	1600	1600	1600
Adjustment:	1.00	1.00	1.00	1.00	1.00	1.00	1.00	1.00	1.00	1.00	1.00	1.00
Lanes:	1.00	2.00	1.00	1.00	1.62	0.38	1.00	1.00	0.00	0.09	0.91	1.00
Final Sat.:	1600	3200	1600	1600	2598	602	1600	1600	0	143	1457	1600
Capacity Analysis Module:												
Vol/Sat:	0.02	0.33	0.04	0.03	0.23	0.23	0.02	0.12	0.00	0.01	0.11	0.01
Crit Moves:		****		****			****				****	

Newport Banning Ranch
Year 2016 without Project - TPO Analysis
AM Peak Hour

Level Of Service Computation Report
ICU 1(Loss as Cycle Length %) Method (Future Volume Alternative)

Intersection #51 Newport Blvd/16th St

Cycle (sec):	120	Critical Vol./Cap.(X):	0.548
Loss Time (sec):	0 (Y+R=4.0 sec)	Average Delay (sec/veh):	xxxxxx
Optimal Cycle:	41	Level Of Service:	A

Street Name:	Newport Boulevard									16th Street								
Approach:	North Bound			South Bound			East Bound			West Bound		
Movement:	L	- T	- R	L	- T	- R	L	- T	- R	L	- T	- R
Control:	Protected			Protected			Permitted			Permitted		
Rights:	Include			Include			Include			Include		
Min. Green:	0	0	0	0	0	0	0	0	0	0	0	0
Lanes:	1 0	2 1	0	1 0	3 0	1	0 0	1! 0	0	0 0	1! 0	0
Volume Module:												
Base Vol:	8	1539	42	60	1370	49	38	44	13	19	68	77
Growth Adj:	1.07	1.07	1.07	1.07	1.07	1.07	1.07	1.07	1.07	1.07	1.07	1.07
Initial Bse:	9	1650	45	64	1469	53	41	47	14	20	73	83
Added Vol:	0	0	0	0	0	0	0	0	0	0	0	0
Committed P:	2	47	10	0	53	0	0	0	5	12	0	0
Initial Fut:	11	1697	55	64	1522	53	41	47	19	32	73	83
User Adj:	1.00	1.00	1.00	1.00	1.00	1.00	1.00	1.00	1.00	1.00	1.00	1.00
PHF Adj:	1.00	1.00	1.00	1.00	1.00	1.00	1.00	1.00	1.00	1.00	1.00	1.00
PHF Volume:	11	1697	55	64	1522	53	41	47	19	32	73	83
Reduct Vol:	0	0	0	0	0	0	0	0	0	0	0	0
Reduced Vol:	11	1697	55	64	1522	53	41	47	19	32	73	83
PCE Adj:	1.00	1.00	1.00	1.00	1.00	1.00	1.00	1.00	1.00	1.00	1.00	1.00
MLF Adj:	1.00	1.00	1.00	1.00	1.00	1.00	1.00	1.00	1.00	1.00	1.00	1.00
FinalVolume:	11	1697	55	64	1522	53	41	47	19	32	73	83
Saturation Flow Module:												
Sat/Lane:	1600	1600	1600	1600	1600	1600	1600	1600	1600	1600	1600	1600
Adjustment:	1.00	1.00	1.00	1.00	1.00	1.00	1.00	1.00	1.00	1.00	1.00	1.00
Lanes:	1.00	2.91	0.09	1.00	3.00	1.00	0.38	0.44	0.18	0.17	0.39	0.44
Final Sat.:	1600	4649	151	1600	4800	1600	610	706	284	276	621	703
Capacity Analysis Module:												
Vol/Sat:	0.01	0.36	0.36	0.04	0.32	0.03	0.03	0.07	0.07	0.02	0.12	0.12
Crit Moves:		****		****			****				****	

Newport Banning Ranch
Year 2016 without Project - TPO Analysis
AM Peak Hour

Level Of Service Computation Report
ICU 1(Loss as Cycle Length %) Method (Future Volume Alternative)

Intersection #52 Bluff Rd/Victoria St

Cycle (sec):	100	Critical Vol./Cap.(X):	0.504
Loss Time (sec):	0 (Y+R=4.0 sec)	Average Delay (sec/veh):	xxxxxx
Optimal Cycle:	46	Level Of Service:	A

Street Name:	Bluff Road						Victoria St					
Approach:	North Bound			South Bound			East Bound			West Bound		
Movement:	L - T - R			L - T - R			L - T - R			L - T - R		
Control:	Protected			Protected			Protected			Protected		
Rights:	Include			Include			Include			Include		
Min. Green:	0	0	0	0	0	0	0	0	0	0	0	0
Lanes:	0 0 0 0 0			0 0 0 0 0			0 0 2 0 0			0 0 2 0 0		
Volume Module:												
Base Vol:	0	0	0	0	0	0	0	1505	0	0	749	0
Growth Adj:	1.00	1.00	1.00	1.00	1.00	1.00	1.00	1.07	1.00	1.00	1.07	1.00
Initial Bse:	0	0	0	0	0	0	0	1613	0	0	803	0
Added Vol:	0	0	0	0	0	0	0	0	0	0	0	0
PasserByVol:	0	0	0	0	0	0	0	0	0	0	0	0
Initial Fut:	0	0	0	0	0	0	0	1613	0	0	803	0
User Adj:	1.00	1.00	1.00	1.00	1.00	1.00	1.00	1.00	1.00	1.00	1.00	1.00
PHF Adj:	1.00	1.00	1.00	1.00	1.00	1.00	1.00	1.00	1.00	1.00	1.00	1.00
PHF Volume:	0	0	0	0	0	0	0	1613	0	0	803	0
Reduct Vol:	0	0	0	0	0	0	0	0	0	0	0	0
Reduced Vol:	0	0	0	0	0	0	0	1613	0	0	803	0
PCE Adj:	1.00	1.00	1.00	1.00	1.00	1.00	1.00	1.00	1.00	1.00	1.00	1.00
MLF Adj:	1.00	1.00	1.00	1.00	1.00	1.00	1.00	1.00	1.00	1.00	1.00	1.00
FinalVolume:	0	0	0	0	0	0	0	1613	0	0	803	0
Saturation Flow Module:												
Sat/Lane:	1600	1600	1600	1600	1600	1600	1600	1600	1600	1600	1600	1600
Adjustment:	1.00	1.00	1.00	1.00	1.00	1.00	1.00	1.00	1.00	1.00	1.00	1.00
Lanes:	0.00	0.00	0.00	0.00	0.00	0.00	0.00	2.00	0.00	0.00	2.00	0.00
Final Sat.:	0	0	0	0	0	0	0	3200	0	0	3200	0
Capacity Analysis Module:												
Vol/Sat:	0.00	0.00	0.00	0.00	0.00	0.00	0.00	0.50	0.00	0.00	0.25	0.00
Crit Moves:								****		****		

Newport Banning Ranch
Year 2016 without Project - TPO Analysis
AM Peak Hour

Level Of Service Computation Report
ICU 1(Loss as Cycle Length %) Method (Future Volume Alternative)

Intersection #53 Bluff Rd/19th St

Cycle (sec):	100	Critical Vol./Cap.(X):	0.000
Loss Time (sec):	0 (Y+R=4.0 sec)	Average Delay (sec/veh):	xxxxxx
Optimal Cycle:	0	Level Of Service:	

Street Name:	Bluff Rd						19th Street					
Approach:	North Bound			South Bound			East Bound			West Bound		
Movement:	L - T - R			L - T - R			L - T - R			L - T - R		
Control:	Permitted			Permitted			Permitted			Permitted		
Rights:	Include			Include			Include			Include		
Min. Green:	0	0	0	0	0	0	0	0	0	0	0	0
Lanes:	0 0 1	0	1	0 1	0	0	0 0 0	0	0	0 0 1!	0	0
Volume Module:												
Base Vol:	0	0	0	0	0	0	0	0	0	0	0	0
Growth Adj:	0.00	0.00	0.00	0.00	0.00	0.00	0.00	0.00	0.00	0.00	0.00	0.00
Initial Bse:	0	0	0	0	0	0	0	0	0	0	0	0
Added Vol:	0	0	0	0	0	0	0	0	0	0	0	0
PasserByVol:	0	0	0	0	0	0	0	0	0	0	0	0
Initial Fut:	0	0	0	0	0	0	0	0	0	0	0	0
User Adj:	0.00	0.00	0.00	0.00	0.00	0.00	0.00	0.00	0.00	0.00	0.00	0.00
PHF Adj:	0.00	0.00	0.00	0.00	0.00	0.00	0.00	0.00	0.00	0.00	0.00	0.00
PHF Volume:	0	0	0	0	0	0	0	0	0	0	0	0
Reduct Vol:	0	0	0	0	0	0	0	0	0	0	0	0
Reduced Vol:	0	0	0	0	0	0	0	0	0	0	0	0
PCE Adj:	0.00	0.00	0.00	0.00	0.00	0.00	0.00	0.00	0.00	0.00	0.00	0.00
MLF Adj:	0.00	0.00	0.00	0.00	0.00	0.00	0.00	0.00	0.00	0.00	0.00	0.00
FinalVolume:	0	0	0	0	0	0	0	0	0	0	0	0
Saturation Flow Module:												
Sat/Lane:	0	0	0	0	0	0	0	0	0	0	0	0
Adjustment:	1.00	1.00	1.00	1.00	1.00	1.00	1.00	1.00	1.00	1.00	1.00	1.00
Lanes:	0.00	0.00	0.00	0.00	0.00	0.00	0.00	0.00	0.00	0.00	0.00	0.00
Final Sat.:	0	0	0	0	0	0	0	0	0	0	0	0
Capacity Analysis Module:												
Vol/Sat:	0.00	0.00	0.00	0.00	0.00	0.00	0.00	0.00	0.00	0.00	0.00	0.00
Crit Moves:												

Newport Banning Ranch
Year 2016 without Project - TPO Analysis
AM Peak Hour

Level Of Service Computation Report
ICU 1(Loss as Cycle Length %) Method (Future Volume Alternative)

Intersection #54 Bluff Rd/17th St

Cycle (sec):	100	Critical Vol./Cap.(X):	0.000
Loss Time (sec):	0 (Y+R=4.0 sec)	Average Delay (sec/veh):	xxxxxx
Optimal Cycle:	0	Level Of Service:	

Street Name:	Bluff Road					17th Street					
Approach:	North Bound			South Bound			East Bound			West Bound		
Movement:	L - T - R			L - T - R			L - T - R			L - T - R		
Control:	Permitted			Permitted			Permitted			Permitted		
Rights:	Include			Include			Include			Include		
Min. Green:	0	0	0	0	0	0	0	0	0	0	0	0
Lanes:	1 0 1	1 0		1 0 0	1 0		0 0 1!	0 0		1 0 1	0 1	
Volume Module:												
Base Vol:	0	0	0	0	0	0	0	0	0	0	0	0
Growth Adj:	0.00	0.00	0.00	0.00	0.00	0.00	0.00	0.00	0.00	0.00	0.00	0.00
Initial Bse:	0	0	0	0	0	0	0	0	0	0	0	0
Added Vol:	0	0	0	0	0	0	0	0	0	0	0	0
PasserByVol:	0	0	0	0	0	0	0	0	0	0	0	0
Initial Fut:	0	0	0	0	0	0	0	0	0	0	0	0
User Adj:	0.00	0.00	0.00	0.00	0.00	0.00	0.00	0.00	0.00	0.00	0.00	0.00
PHF Adj:	0.00	0.00	0.00	0.00	0.00	0.00	0.00	0.00	0.00	0.00	0.00	0.00
PHF Volume:	0	0	0	0	0	0	0	0	0	0	0	0
Reduct Vol:	0	0	0	0	0	0	0	0	0	0	0	0
Reduced Vol:	0	0	0	0	0	0	0	0	0	0	0	0
PCE Adj:	0.00	0.00	0.00	0.00	0.00	0.00	0.00	0.00	0.00	0.00	0.00	0.00
MLF Adj:	0.00	0.00	0.00	0.00	0.00	0.00	0.00	0.00	0.00	0.00	0.00	0.00
FinalVolume:	0	0	0	0	0	0	0	0	0	0	0	0
Saturation Flow Module:												
Sat/Lane:	0	0	0	0	0	0	0	0	0	0	0	0
Adjustment:	1.00	1.00	1.00	1.00	1.00	1.00	1.00	1.00	1.00	1.00	1.00	1.00
Lanes:	0.00	0.00	0.00	0.00	0.00	0.00	0.00	0.00	0.00	0.00	0.00	0.00
Final Sat.:	0	0	0	0	0	0	0	0	0	0	0	0
Capacity Analysis Module:												
Vol/Sat:	0.00	0.00	0.00	0.00	0.00	0.00	0.00	0.00	0.00	0.00	0.00	0.00
Crit Moves:												

Newport Banning Ranch
Year 2016 without Project - TPO Analysis
AM Peak Hour

Level Of Service Computation Report
2000 HCM Unsignalized Method (Future Volume Alternative)

Intersection #55 Bluff Rd/16th St

Average Delay (sec/veh): 0.0 Worst Case Level Of Service: [0.0]

Street Name:	Bluff Road						16th Street					
Approach:	North Bound			South Bound			East Bound			West Bound		
Movement:	L - T - R			L - T - R			L - T - R			L - T - R		
Control:	Uncontrolled			Uncontrolled			Stop Sign			Stop Sign		
Rights:	Include			Include			Include			Include		
Lanes:	1 0 1	1 0		1 0 1	1 0		0 0 1!	0 0		0 0 1!	0 0	
Volume Module:												
Base Vol:	0	0	0	0	0	0	0	0	0	0	0	0
Growth Adj:	0.00	0.00	0.00	0.00	0.00	0.00	0.00	0.00	0.00	0.00	0.00	0.00
Initial Bse:	0	0	0	0	0	0	0	0	0	0	0	0
Added Vol:	0	0	0	0	0	0	0	0	0	0	0	0
PasserByVol:	0	0	0	0	0	0	0	0	0	0	0	0
Initial Fut:	0	0	0	0	0	0	0	0	0	0	0	0
User Adj:	0.00	0.00	0.00	0.00	0.00	0.00	0.00	0.00	0.00	0.00	0.00	0.00
PHF Adj:	0.00	0.00	0.00	0.00	0.00	0.00	0.00	0.00	0.00	0.00	0.00	0.00
PHF Volume:	0	0	0	0	0	0	0	0	0	0	0	0
Reduct Vol:	0	0	0	0	0	0	0	0	0	0	0	0
FinalVolume:	0	0	0	0	0	0	0	0	0	0	0	0
Critical Gap Module:												
Critical Gp:	0.0	0.0	0.0	0.0	0.0	0.0	0.0	0.0	0.0	0.0	0.0	0.0
FollowUpTim:	0.0	0.0	0.0	0.0	0.0	0.0	0.0	0.0	0.0	0.0	0.0	0.0
Capacity Module:												
Cnflict Vol:	0	0	0	0	0	0	0	0	0	0	0	0
Potent Cap.:	0	0	0	0	0	0	0	0	0	0	0	0
Move Cap.:	1	1	1	1	1	1	1	1	1	1	1	1
Volume/Cap:	0.00	0.00	0.00	0.00	0.00	0.00	0.00	0.00	0.00	0.00	0.00	0.00
Level Of Service Module:												
2Way95thQ:	0.0	0.0	0.0	0.0	0.0	0.0	0.0	0.0	0.0	0.0	0.0	0.0
Control Del:	0.0	0.0	0.0	0.0	0.0	0.0	0.0	0.0	0.0	0.0	0.0	0.0
LOS by Move:												
Movement:	LT - LTR - RT			LT - LTR - RT			LT - LTR - RT			LT - LTR - RT		
Shared Cap.:	0	0	0	0	0	0	0	0	0	0	0	0
SharedQueue:	0.0	0.0	0.0	0.0	0.0	0.0	0.0	0.0	0.0	0.0	0.0	0.0
Shrd ConDel:	1.0	1.0	1.0	1.0	1.0	1.0	1.0	1.0	1.0	1.0	1.0	1.0
Shared LOS:												
ApproachDel:	0.0			0.0			0.0			0.0		
ApproachLOS:												

Note: Queue reported is the number of cars per lane.

Newport Banning Ranch
Year 2016 without Project - TPO Analysis
AM Peak Hour

Level Of Service Computation Report
ICU 1(Loss as Cycle Length %) Method (Future Volume Alternative)

Intersection #56 Bluff Rd/15th St

Cycle (sec):	100	Critical Vol./Cap.(X):	0.000
Loss Time (sec):	0 (Y+R=4.0 sec)	Average Delay (sec/veh):	xxxxxx
Optimal Cycle:	0	Level Of Service:	

Street Name:	Bluff Road						15th Street					
Approach:	North Bound			South Bound			East Bound			West Bound		
Movement:	L - T - R			L - T - R			L - T - R			L - T - R		
Control:	Split Phase			Split Phase			Permitted			Permitted		
Rights:	Include			Include			Include			Include		
Min. Green:	0	0	0	0	0	0	0	0	0	0	0	0
Lanes:	0 0 0 0 0			1 0 0 0 2			2 0 2 0 0			0 0 2 1 0		
Volume Module:												
Base Vol:	0	0	0	0	0	0	0	0	0	0	0	0
Growth Adj:	0.00	0.00	0.00	0.00	0.00	0.00	0.00	0.00	0.00	0.00	0.00	0.00
Initial Bse:	0	0	0	0	0	0	0	0	0	0	0	0
Added Vol:	0	0	0	0	0	0	0	0	0	0	0	0
PasserByVol:	0	0	0	0	0	0	0	0	0	0	0	0
Initial Fut:	0	0	0	0	0	0	0	0	0	0	0	0
User Adj:	0.00	0.00	0.00	0.00	0.00	0.00	0.00	0.00	0.00	0.00	0.00	0.00
PHF Adj:	0.00	0.00	0.00	0.00	0.00	0.00	0.00	0.00	0.00	0.00	0.00	0.00
PHF Volume:	0	0	0	0	0	0	0	0	0	0	0	0
Reduct Vol:	0	0	0	0	0	0	0	0	0	0	0	0
Reduced Vol:	0	0	0	0	0	0	0	0	0	0	0	0
PCE Adj:	0.00	0.00	0.00	0.00	0.00	0.00	0.00	0.00	0.00	0.00	0.00	0.00
MLF Adj:	0.00	0.00	0.00	0.00	0.00	0.00	0.00	0.00	0.00	0.00	0.00	0.00
FinalVolume:	0	0	0	0	0	0	0	0	0	0	0	0
Saturation Flow Module:												
Sat/Lane:	0	0	0	0	0	0	0	0	0	0	0	0
Adjustment:	1.00	1.00	1.00	1.00	1.00	1.00	1.00	1.00	1.00	1.00	1.00	1.00
Lanes:	0.00	0.00	0.00	0.00	0.00	0.00	0.00	0.00	0.00	0.00	0.00	0.00
Final Sat.:	0	0	0	0	0	0	0	0	0	0	0	0
Capacity Analysis Module:												
Vol/Sat:	0.00	0.00	0.00	0.00	0.00	0.00	0.00	0.00	0.00	0.00	0.00	0.00
Crit Moves:												

Newport Banning Ranch
Year 2016 without Project - TPO Analysis
AM Peak Hour

Level Of Service Computation Report
ICU 1(Loss as Cycle Length %) Method (Future Volume Alternative)

Intersection #57 Bluff Rd/W. Coast Hwy

Cycle (sec):	120	Critical Vol./Cap.(X):	0.633
Loss Time (sec):	0 (Y+R=4.0 sec)	Average Delay (sec/veh):	xxxxxx
Optimal Cycle:	62	Level Of Service:	B

Street Name:	Bluff Road									W. Coast Highway								
Approach:	North Bound						South Bound						East Bound						West Bound					
Movement:	L	-	T	-	R		L	-	T	-	R		L	-	T	-	R		L	-	T	-	R	
Control:	Split Phase						Split Phase						Protected						Protected					
Rights:			Include						Include						Include						Include			
Min. Green:	0		0		0		0		0		0		0		0		0		0		0		0	
Lanes:	0	0	0	0	0		2	0	0	0	2		2	0	3	0	0		0	0	3	0	1	
Volume Module:																								
Base Vol:	0		0		0		0		0		0		0	2834		0			0	1183		0		
Growth Adj:	1.00	1.00		1.00		1.00	1.00	1.00		1.00		1.00	1.00	1.07		1.00		1.00	1.00	1.07		1.00		
Initial Bse:	0		0		0		0		0		0		0	3038		0			0	1268		0		
Added Vol:	0		0		0		0		0		0		0	0		0			0	0		0		
PasserByVol:	0		0		0		0		0		0		0	0		0			0	0		0		
Initial Fut:	0		0		0		0		0		0		0	3038		0			0	1268		0		
User Adj:	1.00	1.00		1.00		1.00	1.00	1.00		1.00		1.00	1.00	1.00		1.00		1.00	1.00	1.00		1.00		
PHF Adj:	1.00	1.00		1.00		1.00	1.00	1.00		1.00		1.00	1.00	1.00		1.00		1.00	1.00	1.00		1.00		
PHF Volume:	0		0		0		0		0		0		0	3038		0			0	1268		0		
Reduct Vol:	0		0		0		0		0		0		0	0		0			0	0		0		
Reduced Vol:	0		0		0		0		0		0		0	3038		0			0	1268		0		
PCE Adj:	1.00	1.00		1.00		1.00	1.00	1.00		1.00		1.00	1.00	1.00		1.00		1.00	1.00	1.00		1.00		
MLF Adj:	1.00	1.00		1.00		1.00	1.00	1.00		1.00		1.00	1.00	1.00		1.00		1.00	1.00	1.00		1.00		
FinalVolume:	0		0		0		0		0		0		0	3038		0			0	1268		0		
Saturation Flow Module:																								
Sat/Lane:	1600	1600		1600		1600	1600	1600		1600		1600	1600	1600		1600		1600	1600	1600		1600		
Adjustment:	1.00	1.00		1.00		1.00	1.00	1.00		1.00		1.00	1.00	1.00		1.00		1.00	1.00	1.00		1.00		
Lanes:	0.00	0.00		0.00		2.00	0.00	2.00		2.00		3.00	0.00	3.00		1.00		0.00	0.00	3.00		1.00		
Final Sat.:	0		0		0		3200		0		3200		3200	4800		0			0	4800		1600		
Capacity Analysis Module:																								
Vol/Sat:	0.00	0.00		0.00		0.00	0.00	0.00		0.00		0.00	0.00	0.63		0.00		0.00	0.00	0.26		0.00		
Crit Moves:														****						****				

Newport Banning Ranch
Year 2016 without Project - TPO Analysis
AM Peak Hour

Level Of Service Computation Report
2000 HCM 4-Way Stop Method (Future Volume Alternative)

Intersection #58 Monrovia Ave/15th Street

Cycle (sec):	100	Critical Vol./Cap.(X):	0.141
Loss Time (sec):	0 (Y+R=4.0 sec)	Average Delay (sec/veh):	7.5
Optimal Cycle:	0	Level Of Service:	A

Street Name:	Monrovia Ave						15th Street					
Approach:	North Bound			South Bound			East Bound			West Bound		
Movement:	L - T - R			L - T - R			L - T - R			L - T - R		
Control:	Stop Sign			Stop Sign			Stop Sign			Stop Sign		
Rights:	Include			Include			Include			Include		
Min. Green:	0	0	0	0	0	0	0	0	0	0	0	0
Lanes:	0 0 0 1 0			0 0 1! 0 0			1 0 0 0 0			0 0 1! 0 0		
Volume Module: >> Count Date: 4 May 2011 << Existing AM Peak Hour												
Base Vol:	0	6	11	113	3	1	1	0	0	5	2	82
Growth Adj:	1.00	1.00	1.00	1.00	1.00	1.00	1.00	1.00	1.00	1.00	1.00	1.00
Initial Bse:	0	6	11	113	3	1	1	0	0	5	2	82
Added Vol:	0	0	0	0	0	0	0	0	0	0	0	0
PasserByVol:	0	0	0	0	0	0	0	0	0	0	0	0
Initial Fut:	0	6	11	113	3	1	1	0	0	5	2	82
User Adj:	1.00	1.00	1.00	1.00	1.00	1.00	1.00	1.00	1.00	1.00	1.00	1.00
PHF Adj:	1.00	1.00	1.00	1.00	1.00	1.00	1.00	1.00	1.00	1.00	1.00	1.00
PHF Volume:	0	6	11	113	3	1	1	0	0	5	2	82
Reduct Vol:	0	0	0	0	0	0	0	0	0	0	0	0
Reduced Vol:	0	6	11	113	3	1	1	0	0	5	2	82
PCE Adj:	1.00	1.00	1.00	1.00	1.00	1.00	1.00	1.00	1.00	1.00	1.00	1.00
MLF Adj:	1.00	1.00	1.00	1.00	1.00	1.00	1.00	1.00	1.00	1.00	1.00	1.00
FinalVolume:	0	6	11	113	3	1	1	0	0	5	2	82
Saturation Flow Module:												
Adjustment:	1.00	1.00	1.00	1.00	1.00	1.00	1.00	1.00	1.00	1.00	1.00	1.00
Lanes:	0.00	0.35	0.65	0.97	0.02	0.01	1.00	0.00	0.00	0.06	0.02	0.92
Final Sat.:	0	326	597	800	21	7	781	0	0	54	22	882
Capacity Analysis Module:												
Vol/Sat:	xxxx	0.02	0.02	0.14	0.14	0.14	0.00	xxxx	xxxx	0.09	0.09	0.09
Crit Moves:		****		****			****				****	
Delay/Veh:	0.0	6.9	6.9	8.0	8.0	8.0	7.5	0.0	0.0	7.0	7.0	7.0
Delay Adj:	1.00	1.00	1.00	1.00	1.00	1.00	1.00	1.00	1.00	1.00	1.00	1.00
AdjDel/Veh:	0.0	6.9	6.9	8.0	8.0	8.0	7.5	0.0	0.0	7.0	7.0	7.0
LOS by Move:	*	A	A	A	A	A	A	*	*	A	A	A
ApproachDel:		6.9			8.0			7.5			7.0	
Delay Adj:		1.00			1.00			1.00			1.00	
ApprAdjDel:		6.9			8.0			7.5			7.0	
LOS by Appr:		A			A			A			A	
AllWayAvgQ:	0.0	0.0	0.0	0.2	0.2	0.2	0.0	0.0	0.0	0.1	0.1	0.1

Newport Banning Ranch
Year 2016 without Project - TPO Analysis
AM Peak Hour

Note: Queue reported is the number of cars per lane.

Newport Banning Ranch
Year 2016 without Project - TPO Analysis
AM Peak Hour

Level Of Service Computation Report
ICU 1(Loss as Cycle Length %) Method (Future Volume Alternative)

Intersection #100 Pomona Ave/16th St

Cycle (sec):	100	Critical Vol./Cap.(X):	0.027
Loss Time (sec):	0 (Y+R=4.0 sec)	Average Delay (sec/veh):	xxxxxx
Optimal Cycle:	15	Level Of Service:	A

Street Name:	Pomona Avenue						16th Street					
Approach:	North Bound			South Bound			East Bound			West Bound		
Movement:	L - T - R			L - T - R			L - T - R			L - T - R		
Control:	Permitted			Permitted			Permitted			Permitted		
Rights:	Include			Include			Include			Include		
Min. Green:	0	0	0	0	0	0	0	0	0	0	0	0
Lanes:	0 0 0 0 0			1 0 0 1 0			1 0 0 1 0			0 0 0 1 0		
Volume Module:												
Base Vol:	0	0	0	37	30	11	0	-200	0	0	-200	0
Growth Adj:	1.07	1.07	1.07	1.07	1.07	1.07	1.07	1.07	1.07	1.07	1.07	1.07
Initial Bse:	0	0	0	40	32	12	0	-214	0	0	-214	0
Added Vol:	0	0	0	0	0	0	0	0	0	0	0	0
PasserByVol:	0	0	0	0	0	0	0	0	0	0	0	0
Initial Fut:	0	0	0	40	32	12	0	-214	0	0	-214	0
User Adj:	1.00	1.00	1.00	1.00	1.00	1.00	1.00	0.00	1.00	1.00	0.00	1.00
PHF Adj:	1.00	1.00	1.00	1.00	1.00	1.00	1.00	0.00	1.00	1.00	0.00	1.00
PHF Volume:	0	0	0	40	32	12	0	0	0	0	0	0
Reduct Vol:	0	0	0	0	0	0	0	0	0	0	0	0
Reduced Vol:	0	0	0	40	32	12	0	0	0	0	0	0
PCE Adj:	1.00	1.00	1.00	1.00	1.00	1.00	1.00	0.00	1.00	1.00	0.00	1.00
MLF Adj:	1.00	1.00	1.00	1.00	1.00	1.00	1.00	0.00	1.00	1.00	0.00	1.00
FinalVolume:	0	0	0	40	32	12	0	0	0	0	0	0
Saturation Flow Module:												
Sat/Lane:	1600	1600	1600	1600	1600	1600	1600	1600	1600	1600	1600	1600
Adjustment:	1.00	1.00	1.00	1.00	1.00	1.00	1.00	1.00	1.00	1.00	1.00	1.00
Lanes:	0.00	0.00	0.00	1.00	0.73	0.27	1.00	1.00	0.00	0.00	1.00	0.00
Final Sat.:	0	0	0	1600	1171	429	1600	1600	0	0	1600	0
Capacity Analysis Module:												
Vol/Sat:	0.00	0.00	0.00	0.02	0.03	0.03	0.00	0.00	0.00	0.00	0.00	0.00
Crit Moves:					****							

Newport Banning Ranch
Year 2016 without Project - TPO Analysis
PM Peak Hour

Scenario Report

Scenario:	TPO 2016 w/o Project PM ICU
Command:	TPO 2016 w/o Project PM ICU
Volume:	Ex+Comm No Proj PM
Geometry:	2016 Planned ICU
Impact Fee:	Default Impact Fee
Trip Generation:	None
Trip Distribution:	None
Paths:	None
Routes:	Default Route
Configuration:	2016 ICU

Newport Banning Ranch
Year 2016 without Project - TPO Analysis
PM Peak Hour

Level Of Service Computation Report
2000 HCM 4-Way Stop Method (Future Volume Alternative)

Intersection #1 Monrovia Ave/16th St

Cycle (sec):	100	Critical Vol./Cap.(X):	0.180
Loss Time (sec):	0 (Y+R=4.0 sec)	Average Delay (sec/veh):	8.2
Optimal Cycle:	0	Level Of Service:	A

Street Name:	Monrovia Avenue						16th Street					
Approach:	North Bound			South Bound			East Bound			West Bound		
Movement:	L -	T -	R	L -	T -	R	L -	T -	R	L -	T -	R
Control:	Stop Sign			Stop Sign			Stop Sign			Stop Sign		
Rights:	Include			Include			Include			Include		
Min. Green:	0	0	0	0	0	0	0	0	0	0	0	0
Lanes:	0 0	1! 0	0	0 0	1! 0	0	0 0	1! 0	0	0 0	1! 0	0
Volume Module:												
Base Vol:	8	73	23	29	95	17	37	70	21	18	23	31
Growth Adj:	1.00	1.00	1.00	1.00	1.00	1.00	1.00	1.00	1.00	1.00	1.00	1.00
Initial Bse:	8	73	23	29	95	17	37	70	21	18	23	31
Added Vol:	0	0	0	0	0	0	0	0	0	0	0	0
Committed P:	0	0	0	0	0	0	0	0	0	0	0	0
Initial Fut:	8	73	23	29	95	17	37	70	21	18	23	31
User Adj:	1.00	1.00	1.00	1.00	1.00	1.00	1.00	1.00	1.00	1.00	1.00	1.00
PHF Adj:	1.00	1.00	1.00	1.00	1.00	1.00	1.00	1.00	1.00	1.00	1.00	1.00
PHF Volume:	8	73	23	29	95	17	37	70	21	18	23	31
Reduct Vol:	0	0	0	0	0	0	0	0	0	0	0	0
Reduced Vol:	8	73	23	29	95	17	37	70	21	18	23	31
PCE Adj:	1.00	1.00	1.00	1.00	1.00	1.00	1.00	1.00	1.00	1.00	1.00	1.00
MLF Adj:	1.00	1.00	1.00	1.00	1.00	1.00	1.00	1.00	1.00	1.00	1.00	1.00
FinalVolume:	8	73	23	29	95	17	37	70	21	18	23	31
Saturation Flow Module:												
Adjustment:	1.00	1.00	1.00	1.00	1.00	1.00	1.00	1.00	1.00	1.00	1.00	1.00
Lanes:	0.08	0.70	0.22	0.21	0.67	0.12	0.29	0.55	0.16	0.25	0.32	0.43
Final Sat.:	60	551	174	161	527	94	222	420	126	194	248	335
Capacity Analysis Module:												
Vol/Sat:	0.13	0.13	0.13	0.18	0.18	0.18	0.17	0.17	0.17	0.09	0.09	0.09
Crit Moves:		****			****			****			****	
Delay/Veh:	8.0	8.0	8.0	8.4	8.4	8.4	8.3	8.3	8.3	7.8	7.8	7.8
Delay Adj:	1.00	1.00	1.00	1.00	1.00	1.00	1.00	1.00	1.00	1.00	1.00	1.00
AdjDel/Veh:	8.0	8.0	8.0	8.4	8.4	8.4	8.3	8.3	8.3	7.8	7.8	7.8
LOS by Move:	A	A	A	A	A	A	A	A	A	A	A	A
ApproachDel:		8.0			8.4			8.3			7.8	
Delay Adj:		1.00			1.00			1.00			1.00	
ApprAdjDel:		8.0			8.4			8.3			7.8	
LOS by Appr:		A			A			A			A	
AllWayAvgQ:	0.1	0.1	0.1	0.2	0.2	0.2	0.2	0.2	0.2	0.1	0.1	0.1

Newport Banning Ranch
Year 2016 without Project - TPO Analysis
PM Peak Hour

Note: Queue reported is the number of cars per lane.
****

Newport Banning Ranch
Year 2016 without Project - TPO Analysis
PM Peak Hour

Level Of Service Computation Report
ICU 1(Loss as Cycle Length %) Method (Future Volume Alternative)

Intersection #2 Placentia Ave/15th St

Cycle (sec):	100	Critical Vol./Cap.(X):	0.347
Loss Time (sec):	0 (Y+R=4.0 sec)	Average Delay (sec/veh):	xxxxxx
Optimal Cycle:	35	Level Of Service:	A

Street Name:	Placentia Ave						15th Street					
Approach:	North Bound			South Bound			East Bound			West Bound		
Movement:	L - T - R			L - T - R			L - T - R			L - T - R		
Control:	Prot+Permit			Prot+Permit			Split Phase			Split Phase		
Rights:	Include			Include			Include			Include		
Min. Green:	0	0	0	0	0	0	0	0	0	0	0	0
Lanes:	1 0 1	1 0		1 0 1	1 0		0 0 1!	0 0		0 1 0	0 1	
Volume Module:												
Base Vol:	71	440	17	14	394	30	27	23	132	10	48	84
Growth Adj:	1.00	1.00	1.00	1.00	1.00	1.00	1.00	1.00	1.00	1.00	1.00	1.00
Initial Bse:	71	440	17	14	394	30	27	23	132	10	48	84
Added Vol:	0	0	0	0	0	0	0	0	0	0	0	0
Committed P:	0	32	0	0	12	0	0	0	0	0	0	0
Initial Fut:	71	472	17	14	406	30	27	23	132	10	48	84
User Adj:	1.00	1.00	1.00	1.00	1.00	1.00	1.00	1.00	1.00	1.00	1.00	1.00
PHF Adj:	1.00	1.00	1.00	1.00	1.00	1.00	1.00	1.00	1.00	1.00	1.00	1.00
PHF Volume:	71	472	17	14	406	30	27	23	132	10	48	84
Reduct Vol:	0	0	0	0	0	0	0	0	0	0	0	0
Reduced Vol:	71	472	17	14	406	30	27	23	132	10	48	84
PCE Adj:	1.00	1.00	1.00	1.00	1.00	1.00	1.00	1.00	1.00	1.00	1.00	1.00
MLF Adj:	1.00	1.00	1.00	1.00	1.00	1.00	1.00	1.00	1.00	1.00	1.00	1.00
FinalVolume:	71	472	17	14	406	30	27	23	132	10	48	84
Saturation Flow Module:												
Sat/Lane:	1600	1600	1600	1600	1600	1600	1600	1600	1600	1600	1600	1600
Adjustment:	1.00	1.00	1.00	1.00	1.00	1.00	1.00	1.00	1.00	1.00	1.00	1.00
Lanes:	1.00	1.93	0.07	1.00	1.86	0.14	0.15	0.13	0.72	0.17	0.83	1.00
Final Sat.:	1600	3089	111	1600	2980	220	237	202	1160	276	1324	1600
Capacity Analysis Module:												
Vol/Sat:	0.04	0.15	0.15	0.01	0.14	0.14	0.11	0.11	0.11	0.04	0.04	0.05
Crit Moves:	****				****			****				****

Newport Banning Ranch
Year 2016 without Project - TPO Analysis
PM Peak Hour

Level Of Service Computation Report
2000 HCM Unsignalized Method (Future Volume Alternative)

Intersection #3 Superior Ave/15th St

Average Delay (sec/veh): 1.2 Worst Case Level Of Service: D[28.1]

Street Name:	Superior Avenue						15th Street					
Approach:	North Bound			South Bound			East Bound			West Bound		
Movement:	L - T - R			L - T - R			L - T - R			L - T - R		
Control:	Uncontrolled			Uncontrolled			Stop Sign			Stop Sign		
Rights:	Include			Include			Include			Include		
Lanes:	1 0 2 0 0			0 0 1 1 0			1 0 0 0 1			0 0 0 0 0		
Volume Module:												
Base Vol:	35	593	0	0	786	92	35	0	24	0	0	0
Growth Adj:	1.00	1.00	1.00	1.00	1.00	1.00	1.00	1.00	1.00	1.00	1.00	1.00
Initial Bse:	35	593	0	0	786	92	35	0	24	0	0	0
Added Vol:	0	0	0	0	0	0	0	0	0	0	0	0
Committed P:	0	40	0	0	124	0	0	0	0	0	0	0
Initial Fut:	35	633	0	0	910	92	35	0	24	0	0	0
User Adj:	1.00	1.00	1.00	1.00	1.00	1.00	1.00	1.00	1.00	1.00	1.00	1.00
PHF Adj:	1.00	1.00	1.00	1.00	1.00	1.00	1.00	1.00	1.00	1.00	1.00	1.00
PHF Volume:	35	633	0	0	910	92	35	0	24	0	0	0
Reduct Vol:	0	0	0	0	0	0	0	0	0	0	0	0
FinalVolume:	35	633	0	0	910	92	35	0	24	0	0	0
Critical Gap Module:												
Critical Gp:	4.1	xxxx	xxxxx	xxxxx	xxxx	xxxxx	6.8	xxxx	6.9	xxxxx	xxxx	xxxxx
FollowUpTim:	2.2	xxxx	xxxxx	xxxxx	xxxx	xxxxx	3.5	xxxx	3.3	xxxxx	xxxx	xxxxx
Capacity Module:												
Cnflict Vol:	1002	xxxx	xxxxx	xxxx	xxxx	xxxxx	1343	xxxx	501	xxxx	xxxx	xxxxx
Potent Cap.:	699	xxxx	xxxxx	xxxx	xxxx	xxxxx	146	xxxx	521	xxxx	xxxx	xxxxx
Move Cap.:	699	xxxx	xxxxx	xxxx	xxxx	xxxxx	140	xxxx	521	xxxx	xxxx	xxxxx
Volume/Cap:	0.05	xxxx	xxxx	xxxx	xxxx	xxxx	0.25	xxxx	0.05	xxxx	xxxx	xxxx
Level Of Service Module:												
2Way95thQ:	0.2	xxxx	xxxxx	xxxx	xxxx	xxxxx	0.9	xxxx	0.1	xxxx	xxxx	xxxxx
Control Del:	10.4	xxxx	xxxxx	xxxxx	xxxx	xxxxx	39.0	xxxx	12.2	xxxxx	xxxx	xxxxx
LOS by Move:	B	*	*	*	*	*	E	*	B	*	*	*
Movement:	LT - LTR - RT			LT - LTR - RT			LT - LTR - RT			LT - LTR - RT		
Shared Cap.:	xxxx	xxxx	xxxxx	xxxx	xxxx	xxxxx	xxxx	xxxx	xxxxx	xxxx	xxxx	xxxxx
SharedQueue:	xxxxx	xxxx	xxxxx	xxxxx	xxxx	xxxxx	xxxxx	xxxx	xxxxx	xxxxx	xxxx	xxxxx
Shrd ConDel:	xxxxx	xxxx	xxxxx	xxxxx	xxxx	xxxxx	xxxxx	xxxx	xxxxx	xxxxx	xxxx	xxxxx
Shared LOS:	*	*	*	*	*	*	*	*	*	*	*	*
ApproachDel:	xxxxxx			xxxxxx			28.1			xxxxxx		
ApproachLOS:	*			*			D			*		

Note: Queue reported is the number of cars per lane.

Newport Banning Ranch
Year 2016 without Project - TPO Analysis
PM Peak Hour

Level Of Service Computation Report
ICU 1(Loss as Cycle Length %) Method (Future Volume Alternative)

Intersection #4 Superior Ave/Placentia Ave

Cycle (sec):	100	Critical Vol./Cap.(X):	0.599
Loss Time (sec):	0 (Y+R=4.0 sec)	Average Delay (sec/veh):	xxxxxx
Optimal Cycle:	46	Level Of Service:	A

Street Name:	Superior Avenue						Placentia Avenue					
Approach:	North Bound			South Bound			East Bound			West Bound		
Movement:	L - T - R			L - T - R			L - T - R			L - T - R		
Control:	Protected			Protected			Permitted			Permitted		
Rights:	Include			Include			Include			Include		
Min. Green:	0	0	0	0	0	0	0	0	0	0	0	0
Lanes:	1 0 1	1 0		1 0 1	1 0		1 0 1	0 1		0 1 0	1 0	
Volume Module:												
Base Vol:	224	419	22	57	664	11	11	166	316	41	287	86
Growth Adj:	1.00	1.00	1.00	1.00	1.00	1.00	1.00	1.00	1.00	1.00	1.00	1.00
Initial Bse:	224	419	22	57	664	11	11	166	316	41	287	86
Added Vol:	0	0	0	0	0	0	0	0	0	0	0	0
Committed P:	0	40	0	55	69	0	0	2	0	6	32	0
Initial Fut:	224	459	22	112	733	11	11	168	316	47	319	86
User Adj:	1.00	1.00	1.00	1.00	1.00	1.00	1.00	1.00	1.00	1.00	1.00	1.00
PHF Adj:	1.00	1.00	1.00	1.00	1.00	1.00	1.00	1.00	1.00	1.00	1.00	1.00
PHF Volume:	224	459	22	112	733	11	11	168	316	47	319	86
Reduct Vol:	0	0	0	0	0	0	0	0	0	0	0	0
Reduced Vol:	224	459	22	112	733	11	11	168	316	47	319	86
PCE Adj:	1.00	1.00	1.00	1.00	1.00	1.00	1.00	1.00	1.00	1.00	1.00	1.00
MLF Adj:	1.00	1.00	1.00	1.00	1.00	1.00	1.00	1.00	1.00	1.00	1.00	1.00
FinalVolume:	224	459	22	112	733	11	11	168	316	47	319	86
Saturation Flow Module:												
Sat/Lane:	1600	1600	1600	1600	1600	1600	1600	1600	1600	1600	1600	1600
Adjustment:	1.00	1.00	1.00	1.00	1.00	1.00	1.00	1.00	1.00	1.00	1.00	1.00
Lanes:	1.00	1.91	0.09	1.00	1.97	0.03	1.00	1.00	1.00	0.21	1.41	0.38
Final Sat.:	1600	3054	146	1600	3153	47	1600	1600	1600	333	2258	609
Capacity Analysis Module:												
Vol/Sat:	0.14	0.15	0.15	0.07	0.23	0.23	0.01	0.11	0.20	0.03	0.14	0.14
Crit Moves:	****				****				****	****		

Newport Banning Ranch
Year 2016 without Project - TPO Analysis
PM Peak Hour

Level Of Service Computation Report
ICU 1(Loss as Cycle Length %) Method (Future Volume Alternative)

Intersection #5 Hospital Rd/Newport Blvd

Cycle (sec):	120	Critical Vol./Cap.(X):	0.636
Loss Time (sec):	0 (Y+R=4.0 sec)	Average Delay (sec/veh):	xxxxxx
Optimal Cycle:	63	Level Of Service:	B

Street Name:	Newport Boulevard						Hospital Road					
Approach:	North Bound			South Bound			East Bound			West Bound		
Movement:	L - T - R			L - T - R			L - T - R			L - T - R		
Control:	Protected			Protected			Protected			Protected		
Rights:	Include			Include			Include			Include		
Min. Green:	0	0	0	0	0	0	0	0	0	0	0	0
Lanes:	1 0 3 0 1			1 0 3 0 1			2 0 1 0 1			1 0 1 1 0		
Volume Module:												
Base Vol:	117	1215	55	48	1513	205	293	135	187	121	178	38
Growth Adj:	1.00	1.00	1.00	1.00	1.00	1.00	1.00	1.00	1.00	1.00	1.00	1.00
Initial Bse:	117	1215	55	48	1513	205	293	135	187	121	178	38
Added Vol:	0	0	0	0	0	0	0	0	0	0	0	0
Committed P:	26	69	0	0	62	6	19	0	41	0	0	0
Initial Fut:	143	1284	55	48	1575	211	312	135	228	121	178	38
User Adj:	1.00	1.00	1.00	1.00	1.00	1.00	1.00	1.00	1.00	1.00	1.00	1.00
PHF Adj:	1.00	1.00	1.00	1.00	1.00	1.00	1.00	1.00	1.00	1.00	1.00	1.00
PHF Volume:	143	1284	55	48	1575	211	312	135	228	121	178	38
Reduct Vol:	0	0	0	0	0	0	0	0	0	0	0	0
Reduced Vol:	143	1284	55	48	1575	211	312	135	228	121	178	38
PCE Adj:	1.00	1.00	1.00	1.00	1.00	1.00	1.00	1.00	1.00	1.00	1.00	1.00
MLF Adj:	1.00	1.00	1.00	1.00	1.00	1.00	1.00	1.00	1.00	1.00	1.00	1.00
FinalVolume:	143	1284	55	48	1575	211	312	135	228	121	178	38
Saturation Flow Module:												
Sat/Lane:	1600	1600	1600	1600	1600	1600	1600	1600	1600	1600	1600	1600
Adjustment:	1.00	1.00	1.00	1.00	1.00	1.00	1.00	1.00	1.00	1.00	1.00	1.00
Lanes:	1.00	3.00	1.00	1.00	3.00	1.00	2.00	1.00	1.00	1.00	1.65	0.35
Final Sat.:	1600	4800	1600	1600	4800	1600	3200	1600	1600	1600	2637	563
Capacity Analysis Module:												
Vol/Sat:	0.09	0.27	0.03	0.03	0.33	0.13	0.10	0.08	0.14	0.08	0.07	0.07
Crit Moves:	****				****				****	****		

Newport Banning Ranch
Year 2016 without Project - TPO Analysis
PM Peak Hour

Level Of Service Computation Report
ICU 1(Loss as Cycle Length %) Method (Future Volume Alternative)

Intersection #6 Orange St/W. Coast Hwy

Cycle (sec):	120	Critical Vol./Cap.(X):	0.720
Loss Time (sec):	0 (Y+R=4.0 sec)	Average Delay (sec/veh):	xxxxxx
Optimal Cycle:	66	Level Of Service:	C

Street Name:	Orange Street						W. Coast Highway					
Approach:	North Bound			South Bound			East Bound			West Bound		
Movement:	L - T - R			L - T - R			L - T - R			L - T - R		
Control:	Permitted			Permitted			Protected			Protected		
Rights:	Include			Include			Include			Include		
Min. Green:	0	0	0	0	0	0	0	0	0	0	0	0
Lanes:	0 1	0 0	1	0 1	0 0	1	1 0	2 1	0	1 0	3 0	1
Volume Module:												
Base Vol:	37	8	29	32	2	18	44	1170	19	53	2788	26
Growth Adj:	1.00	1.00	1.00	1.00	1.00	1.00	1.07	1.07	1.07	1.07	1.07	1.07
Initial Bse:	37	8	29	32	2	18	47	1254	20	57	2989	28
Added Vol:	0	0	0	0	0	0	0	0	0	0	0	0
Committed P:	0	0	0	0	0	0	0	56	0	0	95	0
Initial Fut:	37	8	29	32	2	18	47	1310	20	57	3084	28
User Adj:	1.00	1.00	1.00	1.00	1.00	1.00	1.00	1.00	1.00	1.00	1.00	1.00
PHF Adj:	1.00	1.00	1.00	1.00	1.00	1.00	1.00	1.00	1.00	1.00	1.00	1.00
PHF Volume:	37	8	29	32	2	18	47	1310	20	57	3084	28
Reduct Vol:	0	0	0	0	0	0	0	0	0	0	0	0
Reduced Vol:	37	8	29	32	2	18	47	1310	20	57	3084	28
PCE Adj:	1.00	1.00	1.00	1.00	1.00	1.00	1.00	1.00	1.00	1.00	1.00	1.00
MLF Adj:	1.00	1.00	1.00	1.00	1.00	1.00	1.00	1.00	1.00	1.00	1.00	1.00
FinalVolume:	37	8	29	32	2	18	47	1310	20	57	3084	28
Saturation Flow Module:												
Sat/Lane:	1600	1600	1600	1600	1600	1600	1600	1600	1600	1600	1600	1600
Adjustment:	1.00	1.00	1.00	1.00	1.00	1.00	1.00	1.00	1.00	1.00	1.00	1.00
Lanes:	0.82	0.18	1.00	0.94	0.06	1.00	1.00	2.95	0.05	1.00	3.00	1.00
Final Sat.:	1316	284	1600	1506	94	1600	1600	4727	73	1600	4800	1600
Capacity Analysis Module:												
Vol/Sat:	0.02	0.03	0.02	0.02	0.02	0.01	0.03	0.28	0.28	0.04	0.64	0.02
Crit Moves:		****		****			****				****	

Newport Banning Ranch
Year 2016 without Project - TPO Analysis
PM Peak Hour

Level Of Service Computation Report
ICU 1(Loss as Cycle Length %) Method (Future Volume Alternative)

Intersection #7 Prospect St/W. Coast Hwy

Cycle (sec):	120	Critical Vol./Cap.(X):	0.723
Loss Time (sec):	0 (Y+R=4.0 sec)	Average Delay (sec/veh):	xxxxxx
Optimal Cycle:	67	Level Of Service:	C

Street Name:	Prospect Street						W. Coast Highway					
Approach:	North Bound			South Bound			East Bound			West Bound		
Movement:	L - T - R			L - T - R			L - T - R			L - T - R		
Control:	Permitted			Permitted			Protected			Protected		
Rights:	Include			Include			Include			Include		
Min. Green:	0	0	0	0	0	0	0	0	0	0	0	0
Lanes:	0 1 0	0 1		0 0 1!	0 0		1 0 2	1 0		1 0 2	1 0	
Volume Module:												
Base Vol:	21	0	28	88	1	8	16	1279	10	23	2645	132
Growth Adj:	1.00	1.00	1.00	1.00	1.00	1.00	1.07	1.07	1.07	1.07	1.07	1.07
Initial Bse:	21	0	28	88	1	8	17	1371	11	25	2835	142
Added Vol:	0	0	0	0	0	0	0	0	0	0	0	0
Committed P:	0	0	0	0	0	0	0	56	0	0	95	0
Initial Fut:	21	0	28	88	1	8	17	1427	11	25	2930	142
User Adj:	1.00	1.00	1.00	1.00	1.00	1.00	1.00	1.00	1.00	1.00	1.00	1.00
PHF Adj:	1.00	1.00	1.00	1.00	1.00	1.00	1.00	1.00	1.00	1.00	1.00	1.00
PHF Volume:	21	0	28	88	1	8	17	1427	11	25	2930	142
Reduct Vol:	0	0	0	0	0	0	0	0	0	0	0	0
Reduced Vol:	21	0	28	88	1	8	17	1427	11	25	2930	142
PCE Adj:	1.00	1.00	1.00	1.00	1.00	1.00	1.00	1.00	1.00	1.00	1.00	1.00
MLF Adj:	1.00	1.00	1.00	1.00	1.00	1.00	1.00	1.00	1.00	1.00	1.00	1.00
FinalVolume:	21	0	28	88	1	8	17	1427	11	25	2930	142
Saturation Flow Module:												
Sat/Lane:	1600	1600	1600	1600	1600	1600	1600	1600	1600	1600	1600	1600
Adjustment:	1.00	1.00	1.00	1.00	1.00	1.00	1.00	1.00	1.00	1.00	1.00	1.00
Lanes:	1.00	0.00	1.00	0.91	0.01	0.08	1.00	2.98	0.02	1.00	2.86	0.14
Final Sat.:	1600	0	1600	1452	16	132	1600	4764	36	1600	4579	221
Capacity Analysis Module:												
Vol/Sat:	0.01	0.00	0.02	0.06	0.06	0.06	0.01	0.30	0.30	0.02	0.64	0.64
Crit Moves:			****	****			****				****	

Newport Banning Ranch
Year 2016 without Project - TPO Analysis
PM Peak Hour

Level Of Service Computation Report
ICU 1(Loss as Cycle Length %) Method (Future Volume Alternative)

Intersection #8 W. Coast Hwy/Superior Ave

Cycle (sec):	120	Critical Vol./Cap.(X):	0.702
Loss Time (sec):	0 (Y+R=4.0 sec)	Average Delay (sec/veh):	xxxxxx
Optimal Cycle:	76	Level Of Service:	C

Street Name:	Superior Avenue						W. Coast Highway					
Approach:	North Bound			South Bound			East Bound			West Bound		
Movement:	L - T - R			L - T - R			L - T - R			L - T - R		
Control:	Split Phase			Split Phase			Protected			Protected		
Rights:	Include			Ovl			Include			Include		
Min. Green:	0	0	0	0	0	0	0	0	0	0	0	0
Lanes:	1 1 0	1 0		1 1 1	0 2		2 0 3	0 1		1 0 3	1 0	
Volume Module:												
Base Vol:	254	208	78	228	243	710	258	986	243	226	1854	162
Growth Adj:	1.00	1.00	1.00	1.00	1.00	1.00	1.07	1.07	1.07	1.07	1.07	1.07
Initial Bse:	254	208	78	228	243	710	277	1057	260	242	1987	174
Added Vol:	0	0	0	0	0	0	0	0	0	0	0	0
Committed P:	0	8	1	0	14	55	32	36	3	0	67	0
Initial Fut:	254	216	79	228	257	765	309	1093	263	242	2054	174
User Adj:	1.00	1.00	1.00	1.00	1.00	1.00	1.00	1.00	1.00	1.00	1.00	1.00
PHF Adj:	1.00	1.00	1.00	1.00	1.00	1.00	1.00	1.00	1.00	1.00	1.00	1.00
PHF Volume:	254	216	79	228	257	765	309	1093	263	242	2054	174
Reduct Vol:	0	0	0	0	0	0	0	0	0	0	0	0
Reduced Vol:	254	216	79	228	257	765	309	1093	263	242	2054	174
PCE Adj:	1.00	1.00	1.00	1.00	1.00	1.00	1.00	1.00	1.00	1.00	1.00	1.00
MLF Adj:	1.00	1.00	1.00	1.00	1.00	1.00	1.00	1.00	1.00	1.00	1.00	1.00
FinalVolume:	254	216	79	228	257	765	309	1093	263	242	2054	174
OvlAdjVol:						456						
Saturation Flow Module:												
Sat/Lane:	1600	1600	1600	1600	1600	1600	1600	1600	1600	1600	1600	1600
Adjustment:	1.00	1.00	1.00	1.00	1.00	1.00	1.00	1.00	1.00	1.00	1.00	1.00
Lanes:	1.39	1.18	0.43	1.41	1.59	2.00	2.00	3.00	1.00	1.00	3.69	0.31
Final Sat.:	2219	1889	692	2256	2544	3200	3200	4800	1600	1600	5901	499
Capacity Analysis Module:												
Vol/Sat:	0.11	0.11	0.11	0.10	0.10	0.24	0.10	0.23	0.16	0.15	0.35	0.35
OvlAdjV/S:						0.14						
Crit Moves:	****					****	****				****	

Newport Banning Ranch
Year 2016 without Project - TPO Analysis
PM Peak Hour

Level Of Service Computation Report
ICU 1(Loss as Cycle Length %) Method (Future Volume Alternative)

Intersection #9 Newport Blvd/W. Coast Hwy

Cycle (sec):	120	Critical Vol./Cap.(X):	0.704
Loss Time (sec):	0 (Y+R=4.0 sec)	Average Delay (sec/veh):	xxxxxx
Optimal Cycle:	77	Level Of Service:	C

Street Name:	Newport Boulevard						W. Coast Highway					
Approach:	North Bound			South Bound			East Bound			West Bound		
Movement:	L - T - R			L - T - R			L - T - R			L - T - R		
Control:	Protected			Protected			Protected			Protected		
Rights:	Include			Include			Ignore			Ignore		
Min. Green:	0	0	0	0	0	0	0	0	0	0	0	0
Lanes:	0 0 0 0 0			2 0 0 0 1			0 0 2 0 1			0 0 3 0 1		
Volume Module:												
Base Vol:	0	0	0	586	0	393	0	1261	159	0	1823	487
Growth Adj:	1.00	1.00	1.00	1.00	1.00	1.00	1.00	1.07	1.07	1.00	1.07	1.07
Initial Bse:	0	0	0	586	0	393	0	1352	170	0	1954	522
Added Vol:	0	0	0	0	0	0	0	0	0	0	0	0
Committed P:	0	0	0	44	0	19	0	76	7	0	26	0
Initial Fut:	0	0	0	630	0	412	0	1428	177	0	1980	522
User Adj:	1.00	1.00	1.00	1.00	1.00	1.00	1.00	1.00	0.00	1.00	1.00	0.00
PHF Adj:	1.00	1.00	1.00	1.00	1.00	1.00	1.00	1.00	0.00	1.00	1.00	0.00
PHF Volume:	0	0	0	630	0	412	0	1428	0	0	1980	0
Reduct Vol:	0	0	0	0	0	0	0	0	0	0	0	0
Reduced Vol:	0	0	0	630	0	412	0	1428	0	0	1980	0
PCE Adj:	1.00	1.00	1.00	1.00	1.00	1.00	1.00	1.00	0.00	1.00	1.00	0.00
MLF Adj:	1.00	1.00	1.00	1.00	1.00	1.00	1.00	1.00	0.00	1.00	1.00	0.00
FinalVolume:	0	0	0	630	0	412	0	1428	0	0	1980	0
Saturation Flow Module:												
Sat/Lane:	1600	1600	1600	1600	1600	1600	1600	1600	1600	1600	1600	1600
Adjustment:	1.00	1.00	1.00	1.00	1.00	1.00	1.00	1.00	1.00	1.00	1.00	1.00
Lanes:	0.00	0.00	0.00	2.00	0.00	1.00	0.00	2.00	1.00	0.00	3.00	1.00
Final Sat.:	0	0	0	3200	0	1600	0	3200	1600	0	4800	1600
Capacity Analysis Module:												
Vol/Sat:	0.00	0.00	0.00	0.20	0.00	0.26	0.00	0.45	0.00	0.00	0.41	0.00
Crit Moves:						****		****		****		

Newport Banning Ranch
Year 2016 without Project - TPO Analysis
PM Peak Hour

Level Of Service Computation Report
ICU 1(Loss as Cycle Length %) Method (Future Volume Alternative)

Intersection #10 Riverside Ave/W. Coast Hwy

Cycle (sec):	120	Critical Vol./Cap.(X):	0.769
Loss Time (sec):	0 (Y+R=4.0 sec)	Average Delay (sec/veh):	xxxxxx
Optimal Cycle:	81	Level Of Service:	C

Street Name:	Riverside Avenue						W. Coast Highway					
Approach:	North Bound			South Bound			East Bound			West Bound		
Movement:	L - T - R			L - T - R			L - T - R			L - T - R		
Control:	Permitted			Permitted			Protected			Protected		
Rights:	Include			Ovl			Include			Include		
Min. Green:	0	0	0	0	0	0	0	0	0	0	0	0
Lanes:	0 0	1! 0	0	0 1	0 0	1	1 0	1 1	0	1 0	3 0	1
Volume Module:												
Base Vol:	10	11	2	98	2	404	244	1373	5	11	2155	70
Growth Adj:	1.00	1.00	1.00	1.00	1.00	1.00	1.07	1.07	1.07	1.07	1.07	1.07
Initial Bse:	10	11	2	98	2	404	262	1472	5	12	2310	75
Added Vol:	0	0	0	0	0	0	0	0	0	0	0	0
Committed P:	0	0	0	2	0	0	0	138	0	0	139	3
Initial Fut:	10	11	2	100	2	404	262	1610	5	12	2449	78
User Adj:	1.00	1.00	1.00	1.00	1.00	1.00	1.00	1.00	1.00	1.00	1.00	1.00
PHF Adj:	1.00	1.00	1.00	1.00	1.00	1.00	1.00	1.00	1.00	1.00	1.00	1.00
PHF Volume:	10	11	2	100	2	404	262	1610	5	12	2449	78
Reduct Vol:	0	0	0	0	0	0	0	0	0	0	0	0
Reduced Vol:	10	11	2	100	2	404	262	1610	5	12	2449	78
PCE Adj:	1.00	1.00	1.00	1.00	1.00	1.00	1.00	1.00	1.00	1.00	1.00	1.00
MLF Adj:	1.00	1.00	1.00	1.00	1.00	1.00	1.00	1.00	1.00	1.00	1.00	1.00
FinalVolume:	10	11	2	100	2	404	262	1610	5	12	2449	78
OvlAdjVol:						142						
Saturation Flow Module:												
Sat/Lane:	1600	1600	1600	1600	1600	1600	1600	1600	1600	1600	1600	1600
Adjustment:	1.00	1.00	1.00	1.00	1.00	1.00	1.00	1.00	1.00	1.00	1.00	1.00
Lanes:	0.43	0.48	0.09	0.98	0.02	1.00	1.00	1.99	0.01	1.00	3.00	1.00
Final Sat.:	696	765	139	1569	31	1600	1600	3189	11	1600	4800	1600
Capacity Analysis Module:												
Vol/Sat:	0.01	0.01	0.01	0.06	0.06	0.25	0.16	0.50	0.50	0.01	0.51	0.05
OvlAdjV/S:						0.09						
Crit Moves:	****					****	****				****	

Newport Banning Ranch
Year 2016 without Project - TPO Analysis
PM Peak Hour

Level Of Service Computation Report
ICU 1(Loss as Cycle Length %) Method (Future Volume Alternative)

Intersection #11 Tustin Ave/W. Coast Hwy

Cycle (sec):	120	Critical Vol./Cap.(X):	0.642
Loss Time (sec):	0 (Y+R=4.0 sec)	Average Delay (sec/veh):	xxxxxx
Optimal Cycle:	52	Level Of Service:	B

Street Name:	Tustin Avenue						W. Coast Highway					
Approach:	North Bound			South Bound			East Bound			West Bound		
Movement:	L - T - R			L - T - R			L - T - R			L - T - R		
Control:	Permitted			Permitted			Protected			Permitted		
Rights:	Include			Include			Include			Include		
Min. Green:	0	0	0	0	0	0	0	0	0	0	0	0
Lanes:	0 0 0 1 0			0 0 1! 0 0			1 0 1 1 0			0 0 3 0 1		
Volume Module:												
Base Vol:	0	1	2	55	0	27	94	1376	20	0	2230	52
Growth Adj:	1.00	1.00	1.00	1.00	1.00	1.00	1.07	1.07	1.07	1.07	1.07	1.07
Initial Bse:	0	1	2	55	0	27	101	1475	21	0	2391	56
Added Vol:	0	0	0	0	0	0	0	0	0	0	0	0
Committed P:	0	0	0	0	0	0	0	140	0	0	143	0
Initial Fut:	0	1	2	55	0	27	101	1615	21	0	2534	56
User Adj:	1.00	1.00	1.00	1.00	1.00	1.00	1.00	1.00	1.00	1.00	1.00	1.00
PHF Adj:	1.00	1.00	1.00	1.00	1.00	1.00	1.00	1.00	1.00	1.00	1.00	1.00
PHF Volume:	0	1	2	55	0	27	101	1615	21	0	2534	56
Reduct Vol:	0	0	0	0	0	0	0	0	0	0	0	0
Reduced Vol:	0	1	2	55	0	27	101	1615	21	0	2534	56
PCE Adj:	1.00	1.00	1.00	1.00	1.00	1.00	1.00	1.00	1.00	1.00	1.00	1.00
MLF Adj:	1.00	1.00	1.00	1.00	1.00	1.00	1.00	1.00	1.00	1.00	1.00	1.00
FinalVolume:	0	1	2	55	0	27	101	1615	21	0	2534	56
Saturation Flow Module:												
Sat/Lane:	1600	1600	1600	1600	1600	1600	1600	1600	1600	1600	1600	1600
Adjustment:	1.00	1.00	1.00	1.00	1.00	1.00	1.00	1.00	1.00	1.00	1.00	1.00
Lanes:	0.00	0.33	0.67	0.67	0.00	0.33	1.00	1.97	0.03	0.00	3.00	1.00
Final Sat.:	0	533	1067	1073	0	527	1600	3158	42	0	4800	1600
Capacity Analysis Module:												
Vol/Sat:	0.00	0.00	0.00	0.03	0.00	0.05	0.06	0.51	0.51	0.00	0.53	0.03
Crit Moves:	****					****	****				****	

Newport Banning Ranch
Year 2016 without Project - TPO Analysis
PM Peak Hour

Level Of Service Computation Report
ICU 1(Loss as Cycle Length %) Method (Future Volume Alternative)

Intersection #12 Dover Dr/W. Coast Hwy

Cycle (sec):	120	Critical Vol./Cap.(X):	0.784
Loss Time (sec):	0 (Y+R=4.0 sec)	Average Delay (sec/veh):	xxxxxx
Optimal Cycle:	106	Level Of Service:	C

Street Name:	Dover Drive						W. Coast Highway					
Approach:	North Bound			South Bound			East Bound			West Bound		
Movement:	L - T - R			L - T - R			L - T - R			L - T - R		
Control:	Split Phase			Split Phase			Protected			Protected		
Rights:	Include			Include			Include			Ignore		
Min. Green:	0	0	0	0	0	0	0	0	0	0	0	0
Lanes:	1 0 1	1 0		3 0 1	0 1		2 0 2	1 0		1 0 3	0 1	
Volume Module:												
Base Vol:	35	42	41	918	61	119	145	1270	25	50	2153	1021
Growth Adj:	1.00	1.00	1.00	1.00	1.00	1.00	1.07	1.07	1.07	1.07	1.07	1.07
Initial Bse:	35	42	41	918	61	119	155	1361	27	54	2308	1095
Added Vol:	0	0	0	0	0	0	0	0	0	0	0	0
Committed P:	0	0	0	3	0	23	34	132	0	0	127	12
Initial Fut:	35	42	41	921	61	142	189	1493	27	54	2435	1107
User Adj:	1.00	1.00	1.00	1.00	1.00	1.00	1.00	1.00	1.00	1.00	1.00	0.00
PHF Adj:	1.00	1.00	1.00	1.00	1.00	1.00	1.00	1.00	1.00	1.00	1.00	0.00
PHF Volume:	35	42	41	921	61	142	189	1493	27	54	2435	0
Reduct Vol:	0	0	0	0	0	0	0	0	0	0	0	0
Reduced Vol:	35	42	41	921	61	142	189	1493	27	54	2435	0
PCE Adj:	1.00	1.00	1.00	1.00	1.00	1.00	1.00	1.00	1.00	1.00	1.00	0.00
MLF Adj:	1.00	1.00	1.00	1.00	1.00	1.00	1.00	1.00	1.00	1.00	1.00	0.00
FinalVolume:	35	42	41	921	61	142	189	1493	27	54	2435	0
Saturation Flow Module:												
Sat/Lane:	1600	1600	1600	1600	1600	1600	1600	1600	1600	1600	1600	1600
Adjustment:	1.00	1.00	1.00	1.00	1.00	1.00	1.00	1.00	1.00	1.00	1.00	1.00
Lanes:	1.00	1.01	0.99	3.00	1.00	1.00	2.00	2.95	0.05	1.00	3.00	1.00
Final Sat.:	1600	1619	1581	4800	1600	1600	3200	4715	85	1600	4800	1600
Capacity Analysis Module:												
Vol/Sat:	0.02	0.03	0.03	0.19	0.04	0.09	0.06	0.32	0.32	0.03	0.51	0.00
Crit Moves:			****	****			****				****	

Newport Banning Ranch
Year 2016 without Project - TPO Analysis
PM Peak Hour

Level Of Service Computation Report
ICU 1(Loss as Cycle Length %) Method (Future Volume Alternative)

Intersection #13 Magnolia St/Hamilton Ave

Cycle (sec):	100	Critical Vol./Cap.(X):	0.571
Loss Time (sec):	5 (Y+R=4.0 sec)	Average Delay (sec/veh):	xxxxxx
Optimal Cycle:	27	Level Of Service:	A

Street Name:	Magnolia Street						Hamilton Avenue					
Approach:	North Bound			South Bound			East Bound			West Bound		
Movement:	L - T - R			L - T - R			L - T - R			L - T - R		
Control:	Prot+Permit			Prot+Permit			Permitted			Permitted		
Rights:	Include			Include			Include			Include		
Min. Green:	0	0	0	0	0	0	0	0	0	0	0	0
Lanes:	1 0 1	1 0		1 0 2	0 1		1 0 0	1 0		1 0 1	0 1	
Volume Module:												
Base Vol:	100	365	55	192	247	25	9	188	71	71	413	379
Growth Adj:	1.07	1.07	1.07	1.07	1.07	1.07	1.07	1.07	1.07	1.07	1.07	1.07
Initial Bse:	107	391	59	206	265	27	10	202	76	76	443	406
Added Vol:	0	0	0	0	0	0	0	0	0	0	0	0
Committed P:	4	6	0	0	5	0	0	0	2	0	0	0
Initial Fut:	111	397	59	206	270	27	10	202	78	76	443	406
User Adj:	1.00	1.00	1.00	1.00	1.00	1.00	1.00	1.00	1.00	1.00	1.00	1.00
PHF Adj:	1.00	1.00	1.00	1.00	1.00	1.00	1.00	1.00	1.00	1.00	1.00	1.00
PHF Volume:	111	397	59	206	270	27	10	202	78	76	443	406
Reduct Vol:	0	0	0	0	0	0	0	0	0	0	0	0
Reduced Vol:	111	397	59	206	270	27	10	202	78	76	443	406
PCE Adj:	1.00	1.00	1.00	1.00	1.00	1.00	1.00	1.00	1.00	1.00	1.00	1.00
MLF Adj:	1.00	1.00	1.00	1.00	1.00	1.00	1.00	1.00	1.00	1.00	1.00	1.00
FinalVolume:	111	397	59	206	270	27	10	202	78	76	443	406
Saturation Flow Module:												
Sat/Lane:	1600	1600	1600	1600	1600	1600	1600	1600	1600	1600	1600	1600
Adjustment:	1.06	1.06	1.06	1.06	1.06	1.06	1.06	1.06	1.06	1.06	1.06	1.06
Lanes:	1.00	1.74	0.26	1.00	2.00	1.00	1.00	0.72	0.28	1.00	1.00	1.00
Final Sat.:	1700	2961	439	1700	3400	1700	1700	1225	475	1700	1700	1700
Capacity Analysis Module:												
Vol/Sat:	0.07	0.13	0.13	0.12	0.08	0.02	0.01	0.16	0.16	0.04	0.26	0.24
Crit Moves:		****		****			****				****	

Newport Banning Ranch
Year 2016 without Project - TPO Analysis
PM Peak Hour

Level Of Service Computation Report
ICU 1(Loss as Cycle Length %) Method (Future Volume Alternative)

Intersection #14 Bushard St/Hamilton Ave

Cycle (sec):	100	Critical Vol./Cap.(X):	0.562
Loss Time (sec):	5 (Y+R=4.0 sec)	Average Delay (sec/veh):	xxxxxx
Optimal Cycle:	27	Level Of Service:	A

Street Name:	Bushard Street						Hamilton Avenue					
Approach:	North Bound			South Bound			East Bound			West Bound		
Movement:	L - T - R			L - T - R			L - T - R			L - T - R		
Control:	Permitted			Permitted			Permitted			Permitted		
Rights:	Include			Include			Include			Include		
Min. Green:	0	0	0	0	0	0	0	0	0	0	0	0
Lanes:	1 0 1	1 0		1 0 1	1 0		1 0 1	1 0		1 0 1	1 0	
Volume Module:												
Base Vol:	55	265	43	117	143	39	26	355	43	44	779	251
Growth Adj:	1.07	1.07	1.07	1.07	1.07	1.07	1.07	1.07	1.07	1.07	1.07	1.07
Initial Bse:	59	284	46	125	153	42	28	381	46	47	835	269
Added Vol:	0	0	0	0	0	0	0	0	0	0	0	0
Committed P:	0	0	0	0	0	0	0	0	0	0	0	0
Initial Fut:	59	284	46	125	153	42	28	381	46	47	835	269
User Adj:	1.00	1.00	1.00	1.00	1.00	1.00	1.00	1.00	1.00	1.00	1.00	1.00
PHF Adj:	1.00	1.00	1.00	1.00	1.00	1.00	1.00	1.00	1.00	1.00	1.00	1.00
PHF Volume:	59	284	46	125	153	42	28	381	46	47	835	269
Reduct Vol:	0	0	0	0	0	0	0	0	0	0	0	0
Reduced Vol:	59	284	46	125	153	42	28	381	46	47	835	269
PCE Adj:	1.00	1.00	1.00	1.00	1.00	1.00	1.00	1.00	1.00	1.00	1.00	1.00
MLF Adj:	1.00	1.00	1.00	1.00	1.00	1.00	1.00	1.00	1.00	1.00	1.00	1.00
FinalVolume:	59	284	46	125	153	42	28	381	46	47	835	269
Saturation Flow Module:												
Sat/Lane:	1600	1600	1600	1600	1600	1600	1600	1600	1600	1600	1600	1600
Adjustment:	1.06	1.06	1.06	1.06	1.06	1.06	1.06	1.06	1.06	1.06	1.06	1.06
Lanes:	1.00	1.72	0.28	1.00	1.57	0.43	1.00	1.78	0.22	1.00	1.51	0.49
Final Sat.:	1700	2925	475	1700	2671	729	1700	3033	367	1700	2571	829
Capacity Analysis Module:												
Vol/Sat:	0.03	0.10	0.10	0.07	0.06	0.06	0.02	0.13	0.13	0.03	0.32	0.32
Crit Moves:		****		****			****				****	

Newport Banning Ranch
Year 2016 without Project - TPO Analysis
PM Peak Hour

Level Of Service Computation Report
ICU 1(Loss as Cycle Length %) Method (Future Volume Alternative)

Intersection #15 Brookhurst St/Hamilton Ave (Victoria St)

Cycle (sec):	100	Critical Vol./Cap.(X):	0.678
Loss Time (sec):	5 (Y+R=4.0 sec)	Average Delay (sec/veh):	xxxxxx
Optimal Cycle:	35	Level Of Service:	B

Street Name:	Brookhurst						Hamilton Avenue (Victoria Street)					
Approach:	North Bound			South Bound			East Bound			West Bound		
Movement:	L - T - R			L - T - R			L - T - R			L - T - R		
Control:	Protected			Protected			Prot+Permit			Prot+Permit		
Rights:	Include			Include			Include			Include		
Min. Green:	0	0	0	0	0	0	0	0	0	0	0	0
Lanes:	1 0 3 0 1			2 0 2 1 0			1 0 1 1 0			1 0 2 0 1		
Volume Module:												
Base Vol:	117	581	192	397	335	106	113	353	67	277	943	489
Growth Adj:	1.07	1.07	1.07	1.07	1.07	1.07	1.07	1.07	1.07	1.07	1.07	1.07
Initial Bse:	125	623	206	426	359	114	121	378	72	297	1011	524
Added Vol:	0	0	0	0	0	0	0	0	0	0	0	0
Committed P:	0	5	0	0	0	0	0	0	0	0	0	0
Initial Fut:	125	628	206	426	359	114	121	378	72	297	1011	524
User Adj:	1.00	1.00	1.00	1.00	1.00	1.00	1.00	1.00	1.00	1.00	1.00	1.00
PHF Adj:	1.00	1.00	1.00	1.00	1.00	1.00	1.00	1.00	1.00	1.00	1.00	1.00
PHF Volume:	125	628	206	426	359	114	121	378	72	297	1011	524
Reduct Vol:	0	0	0	0	0	0	0	0	0	0	0	0
Reduced Vol:	125	628	206	426	359	114	121	378	72	297	1011	524
PCE Adj:	1.00	1.00	1.00	1.00	1.00	1.00	1.00	1.00	1.00	1.00	1.00	1.00
MLF Adj:	1.00	1.00	1.00	1.00	1.00	1.00	1.00	1.00	1.00	1.00	1.00	1.00
FinalVolume:	125	628	206	426	359	114	121	378	72	297	1011	524
Saturation Flow Module:												
Sat/Lane:	1600	1600	1600	1600	1600	1600	1600	1600	1600	1600	1600	1600
Adjustment:	1.06	1.06	1.06	1.06	1.06	1.06	1.06	1.06	1.06	1.06	1.06	1.06
Lanes:	1.00	3.00	1.00	2.00	2.28	0.72	1.00	1.68	0.32	1.00	2.00	1.00
Final Sat.:	1700	5100	1700	3400	3874	1226	1700	2858	542	1700	3400	1700
Capacity Analysis Module:												
Vol/Sat:	0.07	0.12	0.12	0.13	0.09	0.09	0.07	0.13	0.13	0.17	0.30	0.31
Crit Moves:		****		****			****					****

Newport Banning Ranch
Year 2016 without Project - TPO Analysis
PM Peak Hour

Level Of Service Computation Report
ICU 1(Loss as Cycle Length %) Method (Future Volume Alternative)

Intersection #16 Magnolia St/Banning Ave

Cycle (sec):	100	Critical Vol./Cap.(X):	0.295
Loss Time (sec):	5 (Y+R=4.0 sec)	Average Delay (sec/veh):	xxxxxx
Optimal Cycle:	17	Level Of Service:	A

Street Name:	Magnolia Street									Banning Avenue								
Approach:	North Bound					South Bound				East Bound					West Bound			
Movement:	L	-	T	-	R	L	-	T	- R	L	-	T	-	R	L	-	T	- R
Control:	Protected					Protected				Split Phase					Split Phase			
Rights:	Include					Include				Include					Include			
Min. Green:	0	0	0			0	0	0		0	0	0			0	0	0	
Lanes:	0	0	1	1	0	1	0	2	0 0	0	0	0	0	0	2	0	0	0 1
Volume Module:																		
Base Vol:	0	435	60			76	300	0		0	0	0			23	0	56	
Growth Adj:	1.07	1.07	1.07			1.07	1.07	1.07		1.07	1.07	1.07			1.07	1.07	1.07	
Initial Bse:	0	466	64			81	322	0		0	0	0			25	0	60	
Added Vol:	0	0	0			0	0	0		0	0	0			0	0	0	
Committed P:	0	18	0			0	11	0		0	0	0			0	0	0	
Initial Fut:	0	484	64			81	333	0		0	0	0			25	0	60	
User Adj:	1.00	1.00	1.00			1.00	1.00	1.00		1.00	1.00	1.00			1.00	1.00	1.00	
PHF Adj:	1.00	1.00	1.00			1.00	1.00	1.00		1.00	1.00	1.00			1.00	1.00	1.00	
PHF Volume:	0	484	64			81	333	0		0	0	0			25	0	60	
Reduct Vol:	0	0	0			0	0	0		0	0	0			0	0	0	
Reduced Vol:	0	484	64			81	333	0		0	0	0			25	0	60	
PCE Adj:	1.00	1.00	1.00			1.00	1.00	1.00		1.00	1.00	1.00			1.00	1.00	1.00	
MLF Adj:	1.00	1.00	1.00			1.00	1.00	1.00		1.00	1.00	1.00			1.00	1.00	1.00	
FinalVolume:	0	484	64			81	333	0		0	0	0			25	0	60	
Saturation Flow Module:																		
Sat/Lane:	1600	1600	1600			1600	1600	1600		1600	1600	1600			1600	1600	1600	
Adjustment:	1.06	1.06	1.06			1.06	1.06	1.06		1.06	1.06	1.06			1.06	1.06	1.06	
Lanes:	0.00	1.77	0.23			1.00	2.00	0.00		0.00	0.00	0.00			2.00	0.00	1.00	
Final Sat.:	0	3001	399			1700	3400	0		0	0	0			3400	0	1700	
Capacity Analysis Module:																		
Vol/Sat:	0.00	0.16	0.16			0.05	0.10	0.00		0.00	0.00	0.00			0.01	0.00	0.04	
Crit Moves:		****				****											****	

Newport Banning Ranch
Year 2016 without Project - TPO Analysis
PM Peak Hour

Level Of Service Computation Report
2000 HCM 4-Way Stop Method (Future Volume Alternative)

Intersection #17 Bushard St/Banning Ave

Cycle (sec):	100	Critical Vol./Cap.(X):	0.201
Loss Time (sec):	5 (Y+R=4.0 sec)	Average Delay (sec/veh):	9.2
Optimal Cycle:	0	Level Of Service:	A

Street Name:	Bushard Street						Banning Avenue					
Approach:	North Bound			South Bound			East Bound			West Bound		
Movement:	L - T - R			L - T - R			L - T - R			L - T - R		
Control:	Stop Sign			Stop Sign			Stop Sign			Stop Sign		
Rights:	Include			Include			Include			Include		
Min. Green:	0	0	0	0	0	0	0	0	0	0	0	0
Lanes:	1 0 1	1 0		1 0 1	1 0		1 0 0	1 0		1 0 0	1 0	
Volume Module:												
Base Vol:	28	213	23	12	116	38	25	52	10	24	50	21
Growth Adj:	1.07	1.07	1.07	1.07	1.07	1.07	1.07	1.07	1.07	1.07	1.07	1.07
Initial Bse:	30	228	25	13	124	41	27	56	11	26	54	23
Added Vol:	0	0	0	0	0	0	0	0	0	0	0	0
Committed P:	0	3	0	0	2	0	0	0	0	0	0	0
Initial Fut:	30	231	25	13	126	41	27	56	11	26	54	23
User Adj:	1.00	1.00	1.00	1.00	1.00	1.00	1.00	1.00	1.00	1.00	1.00	1.00
PHF Adj:	1.00	1.00	1.00	1.00	1.00	1.00	1.00	1.00	1.00	1.00	1.00	1.00
PHF Volume:	30	231	25	13	126	41	27	56	11	26	54	23
Reduct Vol:	0	0	0	0	0	0	0	0	0	0	0	0
Reduced Vol:	30	231	25	13	126	41	27	56	11	26	54	23
PCE Adj:	1.00	1.00	1.00	1.00	1.00	1.00	1.00	1.00	1.00	1.00	1.00	1.00
MLF Adj:	1.00	1.00	1.00	1.00	1.00	1.00	1.00	1.00	1.00	1.00	1.00	1.00
FinalVolume:	30	231	25	13	126	41	27	56	11	26	54	23
Saturation Flow Module:												
Adjustment:	1.00	1.00	1.00	1.00	1.00	1.00	1.00	1.00	1.00	1.00	1.00	1.00
Lanes:	1.00	1.81	0.19	1.00	1.51	0.49	1.00	0.84	0.16	1.00	0.70	0.30
Final Sat.:	579	1152	124	554	929	311	541	501	96	543	429	180
Capacity Analysis Module:												
Vol/Sat:	0.05	0.20	0.20	0.02	0.14	0.13	0.05	0.11	0.11	0.05	0.13	0.13
Crit Moves:		****			****			****			****	
Delay/Veh:	9.0	9.4	9.3	9.0	9.1	8.8	9.3	9.0	9.0	9.3	9.0	9.0
Delay Adj:	1.00	1.00	1.00	1.00	1.00	1.00	1.00	1.00	1.00	1.00	1.00	1.00
AdjDel/Veh:	9.0	9.4	9.3	9.0	9.1	8.8	9.3	9.0	9.0	9.3	9.0	9.0
LOS by Move:	A	A	A	A	A	A	A	A	A	A	A	A
ApproachDel:		9.4			9.1			9.1			9.1	
Delay Adj:		1.00			1.00			1.00			1.00	
ApprAdjDel:		9.4			9.1			9.1			9.1	
LOS by Appr:		A			A			A			A	
AllWayAvgQ:	0.1	0.2	0.2	0.0	0.1	0.1	0.0	0.1	0.1	0.0	0.1	0.1

Newport Banning Ranch
Year 2016 without Project - TPO Analysis
PM Peak Hour

Note: Queue reported is the number of cars per lane.

Newport Banning Ranch
Year 2016 without Project - TPO Analysis
PM Peak Hour

Level Of Service Computation Report
ICU 1(Loss as Cycle Length %) Method (Future Volume Alternative)

Intersection #18 Brookhurst St/Banning Ave

Cycle (sec):	100	Critical Vol./Cap.(X):	0.252
Loss Time (sec):	5 (Y+R=4.0 sec)	Average Delay (sec/veh):	xxxxxx
Optimal Cycle:	16	Level Of Service:	A

Street Name:	Brookhurst Street						Banning Avenue					
Approach:	North Bound			South Bound			East Bound			West Bound		
Movement:	L - T - R			L - T - R			L - T - R			L - T - R		
Control:	Protected			Protected			Split Phase			Split Phase		
Rights:	Include			Include			Include			Include		
Min. Green:	0	0	0	0	0	0	0	0	0	0	0	0
Lanes:	1 0 3 0 0			0 0 2 1 0			1 0 0 0 1			0 0 0 0 0		
Volume Module:												
Base Vol:	12	769	0	0	509	100	61	0	7	0	0	0
Growth Adj:	1.07	1.07	1.07	1.07	1.07	1.07	1.07	1.07	1.07	1.07	1.07	1.07
Initial Bse:	13	824	0	0	546	107	65	0	8	0	0	0
Added Vol:	0	0	0	0	0	0	0	0	0	0	0	0
Committed P:	0	10	0	0	4	0	0	0	0	0	0	0
Initial Fut:	13	834	0	0	550	107	65	0	8	0	0	0
User Adj:	1.00	1.00	1.00	1.00	1.00	1.00	1.00	1.00	1.00	1.00	1.00	1.00
PHF Adj:	1.00	1.00	1.00	1.00	1.00	1.00	1.00	1.00	1.00	1.00	1.00	1.00
PHF Volume:	13	834	0	0	550	107	65	0	8	0	0	0
Reduct Vol:	0	0	0	0	0	0	0	0	0	0	0	0
Reduced Vol:	13	834	0	0	550	107	65	0	8	0	0	0
PCE Adj:	1.00	1.00	1.00	1.00	1.00	1.00	1.00	1.00	1.00	1.00	1.00	1.00
MLF Adj:	1.00	1.00	1.00	1.00	1.00	1.00	1.00	1.00	1.00	1.00	1.00	1.00
FinalVolume:	13	834	0	0	550	107	65	0	8	0	0	0
Saturation Flow Module:												
Sat/Lane:	1600	1600	1600	1600	1600	1600	1600	1600	1600	1600	1600	1600
Adjustment:	1.06	1.06	1.06	1.06	1.06	1.06	1.06	1.06	1.06	1.06	1.06	1.06
Lanes:	1.00	3.00	0.00	0.00	2.51	0.49	1.00	0.00	1.00	0.00	0.00	0.00
Final Sat.:	1700	5100	0	0	4268	832	1700	0	1700	0	0	0
Capacity Analysis Module:												
Vol/Sat:	0.01	0.16	0.00	0.00	0.13	0.13	0.04	0.00	0.00	0.00	0.00	0.00
Crit Moves:		****		****			****					

Newport Banning Ranch
Year 2016 without Project - TPO Analysis
PM Peak Hour

Level Of Service Computation Report
ICU 1(Loss as Cycle Length %) Method (Future Volume Alternative)

Intersection #19 Magnolia St/PCH

Cycle (sec):	120	Critical Vol./Cap.(X):	0.625
Loss Time (sec):	6 (Y+R=4.0 sec)	Average Delay (sec/veh):	xxxxxx
Optimal Cycle:	34	Level Of Service:	B

Street Name:	Magnolia Street						Pacific Coast Highway					
Approach:	North Bound			South Bound			East Bound			West Bound		
Movement:	L - T - R			L - T - R			L - T - R			L - T - R		
Control:	Split Phase			Split Phase			Protected			Protected		
Rights:	Include			Include			Include			Include		
Min. Green:	0	0	0	0	0	0	0	0	0	0	0	0
Lanes:	1 0 0 1 0			1 1 0 0 1			1 0 3 0 1			1 0 3 0 1		
Volume Module:												
Base Vol:	10	22	15	101	30	152	137	885	17	30	1706	295
Growth Adj:	1.07	1.07	1.07	1.07	1.07	1.07	1.07	1.07	1.07	1.07	1.07	1.07
Initial Bse:	11	24	16	108	32	163	147	949	18	32	1829	316
Added Vol:	0	0	0	0	0	0	0	0	0	0	0	0
Committed P:	0	0	0	11	0	0	0	31	0	0	53	18
Initial Fut:	11	24	16	119	32	163	147	980	18	32	1882	334
User Adj:	1.00	1.00	1.00	1.00	1.00	1.00	1.00	1.00	1.00	1.00	1.00	1.00
PHF Adj:	1.00	1.00	1.00	1.00	1.00	1.00	1.00	1.00	1.00	1.00	1.00	1.00
PHF Volume:	11	24	16	119	32	163	147	980	18	32	1882	334
Reduct Vol:	0	0	0	0	0	0	0	0	0	0	0	0
Reduced Vol:	11	24	16	119	32	163	147	980	18	32	1882	334
PCE Adj:	1.00	1.00	1.00	1.00	1.00	1.00	1.00	1.00	1.00	1.00	1.00	1.00
MLF Adj:	1.00	1.00	1.00	1.00	1.00	1.00	1.00	1.00	1.00	1.00	1.00	1.00
FinalVolume:	11	24	16	119	32	163	147	980	18	32	1882	334
Saturation Flow Module:												
Sat/Lane:	1600	1600	1600	1600	1600	1600	1600	1600	1600	1600	1600	1600
Adjustment:	1.06	1.06	1.06	1.06	1.06	1.06	1.06	1.06	1.06	1.06	1.06	1.06
Lanes:	1.00	0.59	0.41	1.58	0.42	1.00	1.00	3.00	1.00	1.00	3.00	1.00
Final Sat.:	1700	1011	689	2678	722	1700	1700	5100	1700	1700	5100	1700
Capacity Analysis Module:												
Vol/Sat:	0.01	0.02	0.02	0.04	0.04	0.10	0.09	0.19	0.01	0.02	0.37	0.20
Crit Moves:		****				****	****				****	

Newport Banning Ranch
Year 2016 without Project - TPO Analysis
PM Peak Hour

Level Of Service Computation Report
ICU 1(Loss as Cycle Length %) Method (Future Volume Alternative)

Intersection #20 Brookhurst St/Bushard St

Cycle (sec):	100	Critical Vol./Cap.(X):	0.346
Loss Time (sec):	5 (Y+R=4.0 sec)	Average Delay (sec/veh):	xxxxxx
Optimal Cycle:	18	Level Of Service:	A

Street Name:	Brookhurst Street									Bushard Street								
Approach:	North Bound				South Bound				East Bound				West Bound					
Movement:	L	-	T	-	R	L	-	T	-	R	L	-	T	-	R	L	-	T	-	R
Control:	Protected					Protected					Permitted					Permitted				
Rights:	Include					Include					Include					Include				
Min. Green:	0	0	0			0	0	0			0	0	0			0	0	0		
Lanes:	1	0	2	1	0	1	0	3	0	1	1	0	0	0	1	0	0	1!	0	0
Volume Module:																				
Base Vol:	222	662		0		0	430		22		13		0		92		0		0	
Growth Adj:	1.07	1.07		1.07		1.07	1.07		1.07		1.07		1.07		1.07		1.07		1.07	
Initial Bse:	238	710		0		0	461		24		14		0		99		0		0	
Added Vol:	0	0		0		0	0		0		0		0		0		0		0	
Committed P:	6	18		0		0	8		0		0		0		5		0		0	
Initial Fut:	244	728		0		0	469		24		14		0		104		0		0	
User Adj:	1.00	1.00		1.00		1.00	1.00		1.00		1.00		1.00		1.00		1.00		1.00	
PHF Adj:	1.00	1.00		1.00		1.00	1.00		1.00		1.00		1.00		1.00		1.00		1.00	
PHF Volume:	244	728		0		0	469		24		14		0		104		0		0	
Reduct Vol:	0	0		0		0	0		0		0		0		0		0		0	
Reduced Vol:	244	728		0		0	469		24		14		0		104		0		0	
PCE Adj:	1.00	1.00		1.00		1.00	1.00		1.00		1.00		1.00		1.00		1.00		1.00	
MLF Adj:	1.00	1.00		1.00		1.00	1.00		1.00		1.00		1.00		1.00		1.00		1.00	
FinalVolume:	244	728		0		0	469		24		14		0		104		0		0	
Saturation Flow Module:																				
Sat/Lane:	1600	1600		1600		1600	1600		1600		1600		1600		1600		1600		1600	
Adjustment:	1.06	1.06		1.06		1.06	1.06		1.06		1.06		1.06		1.06		1.06		1.06	
Lanes:	1.00	3.00		0.00		1.00	3.00		1.00		1.00		0.00		1.00		0.00		1.00	
Final Sat.:	1700	5100		0		1700	5100		1700		1700		0		1700		0		1700	
Capacity Analysis Module:																				
Vol/Sat:	0.14	0.14		0.00		0.00	0.09		0.01		0.01		0.00		0.06		0.00		0.00	
Crit Moves:	****						****								****					

Newport Banning Ranch
Year 2016 without Project - TPO Analysis
PM Peak Hour

Level Of Service Computation Report
ICU 1(Loss as Cycle Length %) Method (Future Volume Alternative)

Intersection #21 Brookhurst St/PCH

Cycle (sec):	120	Critical Vol./Cap.(X):	0.710
Loss Time (sec):	6 (Y+R=4.0 sec)	Average Delay (sec/veh):	xxxxxx
Optimal Cycle:	42	Level Of Service:	C

Street Name:	Brookhurst Street						Pacific Coast HIghway					
Approach:	North Bound			South Bound			East Bound			West Bound		
Movement:	L - T - R			L - T - R			L - T - R			L - T - R		
Control:	Split Phase			Split Phase			Protected			Protected		
Rights:	Include			Include			Include			Ovl		
Min. Green:	0	0	0	0	0	0	0	0	0	0	0	0
Lanes:	1 0 0 1 0			2 0 1 0 1			1 0 3 0 1			1 0 3 0 1		
Volume Module:												
Base Vol:	8	23	17	324	6	179	182	797	2	13	1871	757
Growth Adj:	1.07	1.07	1.07	1.07	1.07	1.07	1.07	1.07	1.07	1.07	1.07	1.07
Initial Bse:	9	25	18	347	6	192	195	854	2	14	2006	812
Added Vol:	0	0	0	0	0	0	0	0	0	0	0	0
Committed P:	0	0	0	14	0	0	0	42	0	0	71	24
Initial Fut:	9	25	18	361	6	192	195	896	2	14	2077	836
User Adj:	1.00	1.00	1.00	1.00	1.00	1.00	1.00	1.00	1.00	1.00	1.00	1.00
PHF Adj:	1.00	1.00	1.00	1.00	1.00	1.00	1.00	1.00	1.00	1.00	1.00	1.00
PHF Volume:	9	25	18	361	6	192	195	896	2	14	2077	836
Reduct Vol:	0	0	0	0	0	0	0	0	0	0	0	0
Reduced Vol:	9	25	18	361	6	192	195	896	2	14	2077	836
PCE Adj:	1.00	1.00	1.00	1.00	1.00	1.00	1.00	1.00	1.00	1.00	1.00	1.00
MLF Adj:	1.00	1.00	1.00	1.00	1.00	1.00	1.00	1.00	1.00	1.00	1.00	1.00
FinalVolume:	9	25	18	361	6	192	195	896	2	14	2077	836
OvlAdjVol:												644
Saturation Flow Module:												
Sat/Lane:	1600	1600	1600	1600	1600	1600	1600	1600	1600	1600	1600	1600
Adjustment:	1.06	1.06	1.06	1.06	1.06	1.06	1.06	1.06	1.06	1.06	1.06	1.06
Lanes:	1.00	0.57	0.43	2.00	1.00	1.00	1.00	3.00	1.00	1.00	3.00	1.00
Final Sat.:	1700	978	723	3400	1700	1700	1700	5100	1700	1700	5100	1700
Capacity Analysis Module:												
Vol/Sat:	0.01	0.03	0.03	0.11	0.00	0.11	0.11	0.18	0.00	0.01	0.41	0.49
OvlAdjV/S:												0.38
Crit Moves:			****			****	****				****	

Newport Banning Ranch
Year 2016 without Project - TPO Analysis
PM Peak Hour

Level Of Service Computation Report
ICU 1(Loss as Cycle Length %) Method (Future Volume Alternative)

Intersection #22 Placentia Ave/Victoria St

Cycle (sec):	100	Critical Vol./Cap.(X):	0.847
Loss Time (sec):	0 (Y+R=4.0 sec)	Average Delay (sec/veh):	xxxxxx
Optimal Cycle:	149	Level Of Service:	D

Street Name:	Placentia Avenue						Victoria Street					
Approach:	North Bound			South Bound			East Bound			West Bound		
Movement:	L - T - R			L - T - R			L - T - R			L - T - R		
Control:	Protected			Protected			Protected			Protected		
Rights:	Include			Include			Ovl			Include		
Min. Green:	0	0	0	0	0	0	0	0	0	0	0	0
Lanes:	2 0 2 0 1			1 0 2 0 1			1 0 2 0 1			1 0 2 0 1		
Volume Module:												
Base Vol:	520	674	157	103	490	152	71	587	306	166	1376	87
Growth Adj:	1.07	1.07	1.07	1.07	1.07	1.07	1.07	1.07	1.07	1.07	1.07	1.07
Initial Bse:	557	723	168	110	525	163	76	629	328	178	1475	93
Added Vol:	0	0	0	0	0	0	0	0	0	0	0	0
Committed P:	0	0	0	0	0	0	0	0	0	0	0	0
Initial Fut:	557	723	168	110	525	163	76	629	328	178	1475	93
User Adj:	1.00	1.00	1.00	1.00	1.00	1.00	1.00	1.00	1.00	1.00	1.00	1.00
PHF Adj:	1.00	1.00	1.00	1.00	1.00	1.00	1.00	1.00	1.00	1.00	1.00	1.00
PHF Volume:	557	723	168	110	525	163	76	629	328	178	1475	93
Reduct Vol:	0	0	0	0	0	0	0	0	0	0	0	0
Reduced Vol:	557	723	168	110	525	163	76	629	328	178	1475	93
PCE Adj:	1.00	1.00	1.00	1.00	1.00	1.00	1.00	1.00	1.00	1.00	1.00	1.00
MLF Adj:	1.00	1.00	1.00	1.00	1.00	1.00	1.00	1.00	1.00	1.00	1.00	1.00
FinalVolume:	557	723	168	110	525	163	76	629	328	178	1475	93
OvlAdjVol:									49			
Saturation Flow Module:												
Sat/Lane:	1600	1600	1600	1600	1600	1600	1600	1600	1600	1600	1600	1600
Adjustment:	1.00	1.00	1.00	1.00	1.00	1.00	1.00	1.00	1.00	1.00	1.00	1.00
Lanes:	2.00	2.00	1.00	1.00	2.00	1.00	1.00	2.00	1.00	1.00	2.00	1.00
Final Sat.:	3200	3200	1600	1600	3200	1600	1600	3200	1600	1600	3200	1600
Capacity Analysis Module:												
Vol/Sat:	0.17	0.23	0.11	0.07	0.16	0.10	0.05	0.20	0.21	0.11	0.46	0.06
OvlAdjV/S:									0.03			
Crit Moves:	****				****		****				****	

Newport Banning Ranch
Year 2016 without Project - TPO Analysis
PM Peak Hour

Level Of Service Computation Report
ICU 1(Loss as Cycle Length %) Method (Future Volume Alternative)

Intersection #23 Pomona Ave/Victoria St

Cycle (sec):	100	Critical Vol./Cap.(X):	0.711
Loss Time (sec):	0 (Y+R=4.0 sec)	Average Delay (sec/veh):	xxxxxx
Optimal Cycle:	50	Level Of Service:	C

Street Name:	Pomona Avenue						Victoria Street					
Approach:	North Bound			South Bound			East Bound			West Bound		
Movement:	L - T - R			L - T - R			L - T - R			L - T - R		
Control:	Permitted			Permitted			Permitted			Permitted		
Rights:	Include			Include			Include			Include		
Min. Green:	0	0	0	0	0	0	0	0	0	0	0	0
Lanes:	1 0 0	1 0		0 1 0	1 0		0 1 0	1 0		2 0 1	1 0	
Volume Module:												
Base Vol:	50	138	119	20	145	28	21	806	79	118	1526	29
Growth Adj:	1.07	1.07	1.07	1.07	1.07	1.07	1.07	1.07	1.07	1.07	1.07	1.07
Initial Bse:	54	148	128	21	155	30	23	864	85	126	1636	31
Added Vol:	0	0	0	0	0	0	0	0	0	0	0	0
Committed P:	0	0	0	0	0	0	0	0	0	0	0	0
Initial Fut:	54	148	128	21	155	30	23	864	85	126	1636	31
User Adj:	1.00	1.00	1.00	1.00	1.00	1.00	1.00	1.00	1.00	1.00	1.00	1.00
PHF Adj:	1.00	1.00	1.00	1.00	1.00	1.00	1.00	1.00	1.00	1.00	1.00	1.00
PHF Volume:	54	148	128	21	155	30	23	864	85	126	1636	31
Reduct Vol:	0	0	0	0	0	0	0	0	0	0	0	0
Reduced Vol:	54	148	128	21	155	30	23	864	85	126	1636	31
PCE Adj:	1.00	1.00	1.00	1.00	1.00	1.00	1.00	1.00	1.00	1.00	1.00	1.00
MLF Adj:	1.00	1.00	1.00	1.00	1.00	1.00	1.00	1.00	1.00	1.00	1.00	1.00
FinalVolume:	54	148	128	21	155	30	23	864	85	126	1636	31
Saturation Flow Module:												
Sat/Lane:	1600	1600	1600	1600	1600	1600	1600	1600	1600	1600	1600	1600
Adjustment:	1.00	1.00	1.00	1.00	1.00	1.00	1.00	1.00	1.00	1.00	1.00	1.00
Lanes:	1.00	0.54	0.46	1.00	0.84	0.16	1.00	2.00	1.00	1.00	2.00	1.00
Final Sat.:	1600	859	741	1600	1341	259	1600	3200	1600	1600	3200	1600
Capacity Analysis Module:												
Vol/Sat:	0.03	0.17	0.17	0.01	0.12	0.12	0.01	0.27	0.05	0.08	0.51	0.02
Crit Moves:		****		****			****				****	

Newport Banning Ranch
Year 2016 without Project - TPO Analysis
PM Peak Hour

Level Of Service Computation Report
ICU 1(Loss as Cycle Length %) Method (Future Volume Alternative)

Intersection #24 Harbor Blvd/Victoria St

Cycle (sec):	100	Critical Vol./Cap.(X):	0.833
Loss Time (sec):	0 (Y+R=4.0 sec)	Average Delay (sec/veh):	xxxxxx
Optimal Cycle:	136	Level Of Service:	D

Street Name:	Harbor Boulevard						Victoria Street					
Approach:	North Bound			South Bound			East Bound			West Bound		
Movement:	L - T - R			L - T - R			L - T - R			L - T - R		
Control:	Protected			Protected			Protected			Protected		
Rights:	Include			Ovl			Include			Include		
Min. Green:	0	0	0	0	0	0	0	0	0	0	0	0
Lanes:	1 0 3 0 1			1 0 3 0 1			2 0 1 1 0			2 0 2 0 1		
Volume Module:												
Base Vol:	118	1081	124	142	1116	294	269	639	80	121	1212	159
Growth Adj:	1.07	1.07	1.07	1.07	1.07	1.07	1.07	1.07	1.07	1.07	1.07	1.07
Initial Bse:	126	1159	133	152	1196	315	288	685	86	130	1299	170
Added Vol:	0	0	0	0	0	0	0	0	0	0	0	0
Committed P:	0	0	0	0	0	0	0	0	0	0	0	0
Initial Fut:	126	1159	133	152	1196	315	288	685	86	130	1299	170
User Adj:	1.00	1.00	1.00	1.00	1.00	1.00	1.00	1.00	1.00	1.00	1.00	1.00
PHF Adj:	1.00	1.00	1.00	1.00	1.00	1.00	1.00	1.00	1.00	1.00	1.00	1.00
PHF Volume:	126	1159	133	152	1196	315	288	685	86	130	1299	170
Reduct Vol:	0	0	0	0	0	0	0	0	0	0	0	0
Reduced Vol:	126	1159	133	152	1196	315	288	685	86	130	1299	170
PCE Adj:	1.00	1.00	1.00	1.00	1.00	1.00	1.00	1.00	1.00	1.00	1.00	1.00
MLF Adj:	1.00	1.00	1.00	1.00	1.00	1.00	1.00	1.00	1.00	1.00	1.00	1.00
FinalVolume:	126	1159	133	152	1196	315	288	685	86	130	1299	170
OvlAdjVol:						171						
Saturation Flow Module:												
Sat/Lane:	1600	1600	1600	1600	1600	1600	1600	1600	1600	1600	1600	1600
Adjustment:	1.00	1.00	1.00	1.00	1.00	1.00	1.00	1.00	1.00	1.00	1.00	1.00
Lanes:	1.00	3.00	1.00	1.00	3.00	1.00	2.00	1.78	0.22	2.00	2.00	1.00
Final Sat.:	1600	4800	1600	1600	4800	1600	3200	2844	356	3200	3200	1600
Capacity Analysis Module:												
Vol/Sat:	0.08	0.24	0.08	0.10	0.25	0.20	0.09	0.24	0.24	0.04	0.41	0.11
OvlAdjV/S:						0.11						
Crit Moves:		****		****			****				****	

Newport Banning Ranch
Year 2016 without Project - TPO Analysis
PM Peak Hour

Level Of Service Computation Report
ICU 1(Loss as Cycle Length %) Method (Future Volume Alternative)

Intersection #25 Newport Blvd/Victoria St [Ramp]

Cycle (sec):	120	Critical Vol./Cap.(X):	0.482
Loss Time (sec):	0 (Y+R=4.0 sec)	Average Delay (sec/veh):	xxxxxx
Optimal Cycle:	36	Level Of Service:	A

Street Name:	Newport Boulevard									Victoria Street								
Approach:	North Bound			South Bound			East Bound			West Bound		
Movement:	L	- T	- R	L	- T	- R	L	- T	- R	L	- T	- R
Control:	Permitted			Permitted			Protected			Protected		
Rights:	Include			Ignore			Include			Include		
Min. Green:	0	0	0	0	0	0	0	0	0	0	0	0
Lanes:	0 0	0 0	0	1 1	2 0	1	0 0	2 1	0	1 0	1 0	0
Volume Module:												
Base Vol:	0	0	0	590	911	1230	0	765	36	77	233	0
Growth Adj:	1.07	1.07	1.07	1.07	1.07	1.07	1.07	1.07	1.07	1.07	1.07	1.07
Initial Bse:	0	0	0	632	977	1319	0	820	39	83	250	0
Added Vol:	0	0	0	0	0	0	0	0	0	0	0	0
Committed P:	0	0	0	0	0	0	0	0	0	0	0	0
Initial Fut:	0	0	0	632	977	1319	0	820	39	83	250	0
User Adj:	1.00	1.00	1.00	1.00	1.00	0.00	1.00	1.00	1.00	1.00	1.00	1.00
PHF Adj:	1.00	1.00	1.00	1.00	1.00	0.00	1.00	1.00	1.00	1.00	1.00	1.00
PHF Volume:	0	0	0	632	977	0	0	820	39	83	250	0
Reduct Vol:	0	0	0	0	0	0	0	0	0	0	0	0
Reduced Vol:	0	0	0	632	977	0	0	820	39	83	250	0
PCE Adj:	1.00	1.00	1.00	1.00	1.00	0.00	1.00	1.00	1.00	1.00	1.00	1.00
MLF Adj:	1.00	1.00	1.00	1.00	1.00	0.00	1.00	1.00	1.00	1.00	1.00	1.00
FinalVolume:	0	0	0	632	977	0	0	820	39	83	250	0
Saturation Flow Module:												
Sat/Lane:	1600	1600	1600	1600	1600	1600	1600	1600	1600	1600	1600	1600
Adjustment:	1.00	1.00	1.00	1.00	1.00	1.00	1.00	1.00	1.00	1.00	1.00	1.00
Lanes:	0.00	0.00	0.00	1.57	2.43	1.00	0.00	2.87	0.13	1.00	1.00	0.00
Final Sat.:	0	0	0	2516	3884	1600	0	4584	216	1600	1600	0
Capacity Analysis Module:												
Vol/Sat:	0.00	0.00	0.00	0.25	0.25	0.00	0.00	0.18	0.18	0.05	0.16	0.00
Crit Moves:				****				****		****		

Newport Banning Ranch
Year 2016 without Project - TPO Analysis
PM Peak Hour

Level Of Service Computation Report
ICU 1(Loss as Cycle Length %) Method (Future Volume Alternative)

Intersection #26 Newport Blvd /Victoria St (22nd St) [Ramp]

Cycle (sec):	120	Critical Vol./Cap.(X):	0.608
Loss Time (sec):	0 (Y+R=4.0 sec)	Average Delay (sec/veh):	xxxxxx
Optimal Cycle:	47	Level Of Service:	B

Street Name:	Newport Boulevard						Victoria Street (22nd Street)					
Approach:	North Bound			South Bound			East Bound			West Bound		
Movement:	L - T - R			L - T - R			L - T - R			L - T - R		
Control:	Permitted			Permitted			Protected			Protected		
Rights:	Include			Include			Include			Include		
Min. Green:	0	0	0	0	0	0	0	0	0	0	0	0
Lanes:	0 1 2	0 1		0 0 0	0 0		2 0 2	0 0		0 0 1	0 1	
Volume Module:												
Base Vol:	109	907	92	0	0	0	734	601	0	0	202	203
Growth Adj:	1.07	1.07	1.07	1.07	1.07	1.07	1.07	1.07	1.07	1.07	1.07	1.07
Initial Bse:	117	972	99	0	0	0	787	644	0	0	217	218
Added Vol:	0	0	0	0	0	0	0	0	0	0	0	0
Committed P:	0	0	0	0	0	0	0	0	0	0	0	0
Initial Fut:	117	972	99	0	0	0	787	644	0	0	217	218
User Adj:	1.00	1.00	1.00	1.00	1.00	1.00	1.00	1.00	1.00	1.00	1.00	1.00
PHF Adj:	1.00	1.00	1.00	1.00	1.00	1.00	1.00	1.00	1.00	1.00	1.00	1.00
PHF Volume:	117	972	99	0	0	0	787	644	0	0	217	218
Reduct Vol:	0	0	0	0	0	0	0	0	0	0	0	0
Reduced Vol:	117	972	99	0	0	0	787	644	0	0	217	218
PCE Adj:	1.00	1.00	1.00	1.00	1.00	1.00	1.00	1.00	1.00	1.00	1.00	1.00
MLF Adj:	1.00	1.00	1.00	1.00	1.00	1.00	1.00	1.00	1.00	1.00	1.00	1.00
FinalVolume:	117	972	99	0	0	0	787	644	0	0	217	218
Saturation Flow Module:												
Sat/Lane:	1600	1600	1600	1600	1600	1600	1600	1600	1600	1600	1600	1600
Adjustment:	1.00	1.00	1.00	1.00	1.00	1.00	1.00	1.00	1.00	1.00	1.00	1.00
Lanes:	0.32	2.68	1.00	0.00	0.00	0.00	2.00	2.00	0.00	0.00	1.00	1.00
Final Sat.:	515	4285	1600	0	0	0	3200	3200	0	0	1600	1600
Capacity Analysis Module:												
Vol/Sat:	0.07	0.23	0.06	0.00	0.00	0.00	0.25	0.20	0.00	0.00	0.14	0.14
Crit Moves:		****					****				****	

Newport Banning Ranch
Year 2016 without Project - TPO Analysis
PM Peak Hour

Level Of Service Computation Report
2000 HCM 4-Way Stop Method (Future Volume Alternative)

Intersection #27 Whittier Ave/19th St

Cycle (sec):	100	Critical Vol./Cap.(X):	0.290
Loss Time (sec):	0 (Y+R=4.0 sec)	Average Delay (sec/veh):	9.2
Optimal Cycle:	0	Level Of Service:	A

Street Name:	Whittier Avenue						19th St					
Approach:	North Bound			South Bound			East Bound			West Bound		
Movement:	L -	T -	R	L -	T -	R	L -	T -	R	L -	T -	R
Control:	Stop Sign			Stop Sign			Stop Sign			Stop Sign		
Rights:	Include			Include			Include			Include		
Min. Green:	0	0	0	0	0	0	0	0	0	0	0	0
Lanes:	0 0	1! 0	0	0 1	0 0	0	1 0	0 1	0	1 0	0 1	0
Volume Module:												
Base Vol:	32	6	175	17	4	0	1	66	11	146	97	18
Growth Adj:	1.07	1.07	1.07	1.07	1.07	1.07	1.07	1.07	1.07	1.07	1.07	1.07
Initial Bse:	34	6	188	18	4	0	1	71	12	157	104	19
Added Vol:	0	0	0	0	0	0	0	0	0	0	0	0
Committed P:	0	0	0	0	0	0	0	0	0	0	0	0
Initial Fut:	34	6	188	18	4	0	1	71	12	157	104	19
User Adj:	1.00	1.00	1.00	1.00	1.00	1.00	1.00	1.00	1.00	1.00	1.00	1.00
PHF Adj:	1.00	1.00	1.00	1.00	1.00	1.00	1.00	1.00	1.00	1.00	1.00	1.00
PHF Volume:	34	6	188	18	4	0	1	71	12	157	104	19
Reduct Vol:	0	0	0	0	0	0	0	0	0	0	0	0
Reduced Vol:	34	6	188	18	4	0	1	71	12	157	104	19
PCE Adj:	1.00	1.00	1.00	1.00	1.00	1.00	1.00	1.00	1.00	1.00	1.00	1.00
MLF Adj:	1.00	1.00	1.00	1.00	1.00	1.00	1.00	1.00	1.00	1.00	1.00	1.00
FinalVolume:	34	6	188	18	4	0	1	71	12	157	104	19
Saturation Flow Module:												
Adjustment:	1.00	1.00	1.00	1.00	1.00	1.00	1.00	1.00	1.00	1.00	1.00	1.00
Lanes:	0.15	0.03	0.82	0.81	0.19	0.00	1.00	0.86	0.14	1.00	0.84	0.16
Final Sat.:	118	22	647	521	123	0	588	560	93	620	583	108
Capacity Analysis Module:												
Vol/Sat:	0.29	0.29	0.29	0.03	0.03	xxxx	0.00	0.13	0.13	0.25	0.18	0.18
Crit Moves:		****			****			****			****	
Delay/Veh:	9.0	9.0	9.0	8.4	8.4	0.0	8.6	8.7	8.7	10.2	8.8	8.8
Delay Adj:	1.00	1.00	1.00	1.00	1.00	1.00	1.00	1.00	1.00	1.00	1.00	1.00
AdjDel/Veh:	9.0	9.0	9.0	8.4	8.4	0.0	8.6	8.7	8.7	10.2	8.8	8.8
LOS by Move:	A	A	A	A	A	*	A	A	A	B	A	A
ApproachDel:		9.0			8.4			8.7			9.6	
Delay Adj:		1.00			1.00			1.00			1.00	
ApprAdjDel:		9.0			8.4			8.7			9.6	
LOS by Appr:		A			A			A			A	
AllWayAvgQ:	0.4	0.4	0.4	0.0	0.0	0.0	0.0	0.1	0.1	0.3	0.2	0.2

Newport Banning Ranch
Year 2016 without Project - TPO Analysis
PM Peak Hour

Note: Queue reported is the number of cars per lane.

Newport Banning Ranch
Year 2016 without Project - TPO Analysis
PM Peak Hour

Level Of Service Computation Report
2000 HCM 4-Way Stop Method (Future Volume Alternative)

Intersection #28 Monrovia Ave/19th St

Cycle (sec):	100	Critical Vol./Cap.(X):	0.545
Loss Time (sec):	0 (Y+R=4.0 sec)	Average Delay (sec/veh):	14.0
Optimal Cycle:	0	Level Of Service:	B

Street Name:	Monrovia Avenue						19th Street					
Approach:	North Bound			South Bound			East Bound			West Bound		
Movement:	L -	T -	R	L -	T -	R	L -	T -	R	L -	T -	R
Control:	Stop Sign			Stop Sign			Stop Sign			Stop Sign		
Rights:	Include			Include			Include			Include		
Min. Green:	0	0	0	0	0	0	0	0	0	0	0	0
Lanes:	0 1	0 0	1	0 0	1!	0 0	1 0	1 0	1	1 0	1 0	1
Volume Module:												
Base Vol:	14	25	243	50	9	3	6	259	9	124	255	50
Growth Adj:	1.07	1.07	1.07	1.07	1.07	1.07	1.07	1.07	1.07	1.07	1.07	1.07
Initial Bse:	15	27	260	54	10	3	6	278	10	133	273	54
Added Vol:	0	0	0	0	0	0	0	0	0	0	0	0
Committed P:	0	0	0	0	0	0	0	0	0	0	0	0
Initial Fut:	15	27	260	54	10	3	6	278	10	133	273	54
User Adj:	1.00	1.00	1.00	1.00	1.00	1.00	1.00	1.00	1.00	1.00	1.00	1.00
PHF Adj:	1.00	1.00	1.00	1.00	1.00	1.00	1.00	1.00	1.00	1.00	1.00	1.00
PHF Volume:	15	27	260	54	10	3	6	278	10	133	273	54
Reduct Vol:	0	0	0	0	0	0	0	0	0	0	0	0
Reduced Vol:	15	27	260	54	10	3	6	278	10	133	273	54
PCE Adj:	1.00	1.00	1.00	1.00	1.00	1.00	1.00	1.00	1.00	1.00	1.00	1.00
MLF Adj:	1.00	1.00	1.00	1.00	1.00	1.00	1.00	1.00	1.00	1.00	1.00	1.00
FinalVolume:	15	27	260	54	10	3	6	278	10	133	273	54
Saturation Flow Module:												
Adjustment:	1.00	1.00	1.00	1.00	1.00	1.00	1.00	1.00	1.00	1.00	1.00	1.00
Lanes:	0.36	0.64	1.00	0.81	0.14	0.05	1.00	1.00	1.00	1.00	1.00	1.00
Final Sat.:	179	319	573	364	65	22	469	509	557	495	535	591
Capacity Analysis Module:												
Vol/Sat:	0.08	0.08	0.45	0.15	0.15	0.15	0.01	0.55	0.02	0.27	0.51	0.09
Crit Moves:			****		****			****			****	
Delay/Veh:	10.2	10.2	13.2	11.4	11.4	11.4	10.1	16.8	8.9	12.1	15.4	9.1
Delay Adj:	1.00	1.00	1.00	1.00	1.00	1.00	1.00	1.00	1.00	1.00	1.00	1.00
AdjDel/Veh:	10.2	10.2	13.2	11.4	11.4	11.4	10.1	16.8	8.9	12.1	15.4	9.1
LOS by Move:	B	B	B	B	B	B	B	C	A	B	C	A
ApproachDel:	12.7			11.4			16.4			13.7		
Delay Adj:	1.00			1.00			1.00			1.00		
ApprAdjDel:	12.7			11.4			16.4			13.7		
LOS by Appr:	B			B			C			B		
AllWayAvgQ:	0.1	0.1	0.7	0.1	0.1	0.1	0.0	1.0	0.0	0.3	0.9	0.1

Newport Banning Ranch
Year 2016 without Project - TPO Analysis
PM Peak Hour

Note: Queue reported is the number of cars per lane.

Newport Banning Ranch
Year 2016 without Project - TPO Analysis
PM Peak Hour

Level Of Service Computation Report
ICU 1(Loss as Cycle Length %) Method (Future Volume Alternative)

Intersection #29 Placentia Ave/19th St

Cycle (sec):	100	Critical Vol./Cap.(X):	0.732
Loss Time (sec):	0 (Y+R=4.0 sec)	Average Delay (sec/veh):	xxxxxx
Optimal Cycle:	85	Level Of Service:	C

Street Name:	Placentia Avenue						19th Street					
Approach:	North Bound			South Bound			East Bound			West Bound		
Movement:	L - T - R			L - T - R			L - T - R			L - T - R		
Control:	Protected			Protected			Protected			Protected		
Rights:	Include			Include			Include			Include		
Min. Green:	0	0	0	0	0	0	0	0	0	0	0	0
Lanes:	1 0 2	0 1		1 0 1	1 0		2 0 1	1 0		2 0 2	0 1	
Volume Module:												
Base Vol:	49	863	246	206	565	221	306	600	56	248	405	281
Growth Adj:	1.07	1.07	1.07	1.07	1.07	1.07	1.07	1.07	1.07	1.07	1.07	1.07
Initial Bse:	53	925	264	221	606	237	328	643	60	266	434	301
Added Vol:	0	0	0	0	0	0	0	0	0	0	0	0
Committed P:	1	5	1	0	0	0	0	0	0	0	0	0
Initial Fut:	54	930	265	221	606	237	328	643	60	266	434	301
User Adj:	1.00	1.00	1.00	1.00	1.00	1.00	1.00	1.00	1.00	1.00	1.00	1.00
PHF Adj:	1.00	1.00	1.00	1.00	1.00	1.00	1.00	1.00	1.00	1.00	1.00	1.00
PHF Volume:	54	930	265	221	606	237	328	643	60	266	434	301
Reduct Vol:	0	0	0	0	0	0	0	0	0	0	0	0
Reduced Vol:	54	930	265	221	606	237	328	643	60	266	434	301
PCE Adj:	1.00	1.00	1.00	1.00	1.00	1.00	1.00	1.00	1.00	1.00	1.00	1.00
MLF Adj:	1.00	1.00	1.00	1.00	1.00	1.00	1.00	1.00	1.00	1.00	1.00	1.00
FinalVolume:	54	930	265	221	606	237	328	643	60	266	434	301
Saturation Flow Module:												
Sat/Lane:	1600	1600	1600	1600	1600	1600	1600	1600	1600	1600	1600	1600
Adjustment:	1.00	1.00	1.00	1.00	1.00	1.00	1.00	1.00	1.00	1.00	1.00	1.00
Lanes:	1.00	2.00	1.00	1.00	1.44	0.56	2.00	1.83	0.17	2.00	2.00	1.00
Final Sat.:	1600	3200	1600	1600	2300	900	3200	2927	273	3200	3200	1600
Capacity Analysis Module:												
Vol/Sat:	0.03	0.29	0.17	0.14	0.26	0.26	0.10	0.22	0.22	0.08	0.14	0.19
Crit Moves:		****		****				****		****		

Newport Banning Ranch
Year 2016 without Project - TPO Analysis
PM Peak Hour

Level Of Service Computation Report
ICU 1(Loss as Cycle Length %) Method (Future Volume Alternative)

Intersection #30 Pomona Ave/19th St

Cycle (sec):	100	Critical Vol./Cap.(X):	0.609
Loss Time (sec):	0 (Y+R=4.0 sec)	Average Delay (sec/veh):	xxxxxx
Optimal Cycle:	58	Level Of Service:	B

Street Name:	Pomona Avenue						19th Street					
Approach:	North Bound			South Bound			East Bound			West Bound		
Movement:	L - T - R			L - T - R			L - T - R			L - T - R		
Control:	Protected			Protected			Prot+Permit			Prot+Permit		
Rights:	Include			Include			Include			Include		
Min. Green:	0	0	0	0	0	0	0	0	0	0	0	0
Lanes:	1 0 0	1 0		1 0 0	1 0		1 0 1	1 0		1 0 1	1 0	
Volume Module:												
Base Vol:	50	125	110	63	98	55	40	922	47	127	809	59
Growth Adj:	1.07	1.07	1.07	1.07	1.07	1.07	1.07	1.07	1.07	1.07	1.07	1.07
Initial Bse:	54	134	118	68	105	59	43	988	50	136	867	63
Added Vol:	0	0	0	0	0	0	0	0	0	0	0	0
Committed P:	0	0	0	0	0	0	0	0	0	0	0	0
Initial Fut:	54	134	118	68	105	59	43	988	50	136	867	63
User Adj:	1.00	1.00	1.00	1.00	1.00	1.00	1.00	1.00	1.00	1.00	1.00	1.00
PHF Adj:	1.00	1.00	1.00	1.00	1.00	1.00	1.00	1.00	1.00	1.00	1.00	1.00
PHF Volume:	54	134	118	68	105	59	43	988	50	136	867	63
Reduct Vol:	0	0	0	0	0	0	0	0	0	0	0	0
Reduced Vol:	54	134	118	68	105	59	43	988	50	136	867	63
PCE Adj:	1.00	1.00	1.00	1.00	1.00	1.00	1.00	1.00	1.00	1.00	1.00	1.00
MLF Adj:	1.00	1.00	1.00	1.00	1.00	1.00	1.00	1.00	1.00	1.00	1.00	1.00
FinalVolume:	54	134	118	68	105	59	43	988	50	136	867	63
Saturation Flow Module:												
Sat/Lane:	1600	1600	1600	1600	1600	1600	1600	1600	1600	1600	1600	1600
Adjustment:	1.00	1.00	1.00	1.00	1.00	1.00	1.00	1.00	1.00	1.00	1.00	1.00
Lanes:	1.00	0.53	0.47	1.00	0.64	0.36	1.00	1.90	0.10	1.00	1.86	0.14
Final Sat.:	1600	851	749	1600	1025	575	1600	3045	155	1600	2982	218
Capacity Analysis Module:												
Vol/Sat:	0.03	0.16	0.16	0.04	0.10	0.10	0.03	0.32	0.32	0.09	0.29	0.29
Crit Moves:		****		****				****		****		

Newport Banning Ranch
Year 2016 without Project - TPO Analysis
PM Peak Hour

Level Of Service Computation Report
ICU 1(Loss as Cycle Length %) Method (Future Volume Alternative)

Intersection #31 Anaheim Ave/19th St

Cycle (sec):	100	Critical Vol./Cap.(X):	0.584
Loss Time (sec):	0 (Y+R=4.0 sec)	Average Delay (sec/veh):	xxxxxx
Optimal Cycle:	45	Level Of Service:	A

Street Name:	Anaheim Avenue						19th Street					
Approach:	North Bound			South Bound			East Bound			West Bound		
Movement:	L - T - R			L - T - R			L - T - R			L - T - R		
Control:	Permitted			Permitted			Prot+Permit			Prot+Permit		
Rights:	Include			Include			Include			Include		
Min. Green:	0	0	0	0	0	0	0	0	0	0	0	0
Lanes:	1 0	0 1	0	1 0	0 1	0	1 0	1 1	0	1 0	2 0	1
Volume Module:												
Base Vol:	61	60	97	59	48	26	45	1023	53	118	947	109
Growth Adj:	1.07	1.07	1.07	1.07	1.07	1.07	1.07	1.07	1.07	1.07	1.07	1.07
Initial Bse:	65	64	104	63	51	28	48	1097	57	126	1015	117
Added Vol:	0	0	0	0	0	0	0	0	0	0	0	0
Committed P:	0	0	0	0	0	0	0	0	0	0	0	0
Initial Fut:	65	64	104	63	51	28	48	1097	57	126	1015	117
User Adj:	1.00	1.00	1.00	1.00	1.00	1.00	1.00	1.00	1.00	1.00	1.00	1.00
PHF Adj:	1.00	1.00	1.00	1.00	1.00	1.00	1.00	1.00	1.00	1.00	1.00	1.00
PHF Volume:	65	64	104	63	51	28	48	1097	57	126	1015	117
Reduct Vol:	0	0	0	0	0	0	0	0	0	0	0	0
Reduced Vol:	65	64	104	63	51	28	48	1097	57	126	1015	117
PCE Adj:	1.00	1.00	1.00	1.00	1.00	1.00	1.00	1.00	1.00	1.00	1.00	1.00
MLF Adj:	1.00	1.00	1.00	1.00	1.00	1.00	1.00	1.00	1.00	1.00	1.00	1.00
FinalVolume:	65	64	104	63	51	28	48	1097	57	126	1015	117
Saturation Flow Module:												
Sat/Lane:	1600	1600	1600	1600	1600	1600	1600	1600	1600	1600	1600	1600
Adjustment:	1.00	1.00	1.00	1.00	1.00	1.00	1.00	1.00	1.00	1.00	1.00	1.00
Lanes:	1.00	0.38	0.62	1.00	0.65	0.35	1.00	1.90	0.10	1.00	2.00	1.00
Final Sat.:	1600	611	989	1600	1038	562	1600	3042	158	1600	3200	1600
Capacity Analysis Module:												
Vol/Sat:	0.04	0.11	0.11	0.04	0.05	0.05	0.03	0.36	0.36	0.08	0.32	0.07
Crit Moves:		****		****				****		****		

Newport Banning Ranch
Year 2016 without Project - TPO Analysis
PM Peak Hour

Level Of Service Computation Report
ICU 1(Loss as Cycle Length %) Method (Future Volume Alternative)

Intersection #32 Park Ave/19th St

Cycle (sec):	100	Critical Vol./Cap.(X):	0.583
Loss Time (sec):	0 (Y+R=4.0 sec)	Average Delay (sec/veh):	xxxxxx
Optimal Cycle:	45	Level Of Service:	A

Street Name:	Park Avenue						19th St					
Approach:	North Bound			South Bound			East Bound			West Bound		
Movement:	L - T - R			L - T - R			L - T - R			L - T - R		
Control:	Permitted			Permitted			Prot+Permit			Prot+Permit		
Rights:	Include			Include			Include			Include		
Min. Green:	0	0	0	0	0	0	0	0	0	0	0	0
Lanes:	2 0 0 0 1			0 0 0 0 0			1 0 2 0 1			1 0 3 0 0		
Volume Module:												
Base Vol:	119	0	153	0	0	0	20	1069	70	183	1034	0
Growth Adj:	1.07	1.07	1.07	1.07	1.07	1.07	1.07	1.07	1.07	1.07	1.07	1.07
Initial Bse:	128	0	164	0	0	0	21	1146	75	196	1108	0
Added Vol:	0	0	0	0	0	0	0	0	0	0	0	0
Committed P:	0	0	0	0	0	0	0	0	0	0	0	0
Initial Fut:	128	0	164	0	0	0	21	1146	75	196	1108	0
User Adj:	1.00	1.00	1.00	1.00	1.00	1.00	1.00	1.00	1.00	1.00	1.00	1.00
PHF Adj:	1.00	1.00	1.00	1.00	1.00	1.00	1.00	1.00	1.00	1.00	1.00	1.00
PHF Volume:	128	0	164	0	0	0	21	1146	75	196	1108	0
Reduct Vol:	0	0	0	0	0	0	0	0	0	0	0	0
Reduced Vol:	128	0	164	0	0	0	21	1146	75	196	1108	0
PCE Adj:	1.00	1.00	1.00	1.00	1.00	1.00	1.00	1.00	1.00	1.00	1.00	1.00
MLF Adj:	1.00	1.00	1.00	1.00	1.00	1.00	1.00	1.00	1.00	1.00	1.00	1.00
FinalVolume:	128	0	164	0	0	0	21	1146	75	196	1108	0
Saturation Flow Module:												
Sat/Lane:	1600	1600	1600	1600	1600	1600	1600	1600	1600	1600	1600	1600
Adjustment:	1.00	1.00	1.00	1.00	1.00	1.00	1.00	1.00	1.00	1.00	1.00	1.00
Lanes:	2.00	0.00	1.00	0.00	0.00	0.00	1.00	2.00	1.00	1.00	3.00	0.00
Final Sat.:	3200	0	1600	0	0	0	1600	3200	1600	1600	4800	0
Capacity Analysis Module:												
Vol/Sat:	0.04	0.00	0.10	0.00	0.00	0.00	0.01	0.36	0.05	0.12	0.23	0.00
Crit Moves:			****					****		****		

Newport Banning Ranch
Year 2016 without Project - TPO Analysis
PM Peak Hour

Level Of Service Computation Report
ICU 1(Loss as Cycle Length %) Method (Future Volume Alternative)

Intersection #33 Harbor Blvd/19th St

Cycle (sec):	100	Critical Vol./Cap.(X):	0.603
Loss Time (sec):	0 (Y+R=4.0 sec)	Average Delay (sec/veh):	xxxxxx
Optimal Cycle:	57	Level Of Service:	B

Street Name:	Harbor Boulevard						19th Street					
Approach:	North Bound			South Bound			East Bound			West Bound		
Movement:	L - T - R			L - T - R			L - T - R			L - T - R		
Control:	Protected			Protected			Protected			Protected		
Rights:	Include			Include			Include			Include		
Min. Green:	0	0	0	0	0	0	0	0	0	0	0	0
Lanes:	1 0 2	1 0		1 0 2	0 1		2 0 2	1 0		1 0 3	0 1	
Volume Module:												
Base Vol:	75	453	23	183	614	317	481	749	65	188	791	215
Growth Adj:	1.07	1.07	1.07	1.07	1.07	1.07	1.07	1.07	1.07	1.07	1.07	1.07
Initial Bse:	80	486	25	196	658	340	516	803	70	202	848	230
Added Vol:	0	0	0	0	0	0	0	0	0	0	0	0
Committed P:	3	11	0	0	24	0	0	0	6	0	0	0
Initial Fut:	83	497	25	196	682	340	516	803	76	202	848	230
User Adj:	1.00	1.00	1.00	1.00	1.00	1.00	1.00	1.00	1.00	1.00	1.00	1.00
PHF Adj:	1.00	1.00	1.00	1.00	1.00	1.00	1.00	1.00	1.00	1.00	1.00	1.00
PHF Volume:	83	497	25	196	682	340	516	803	76	202	848	230
Reduct Vol:	0	0	0	0	0	0	0	0	0	0	0	0
Reduced Vol:	83	497	25	196	682	340	516	803	76	202	848	230
PCE Adj:	1.00	1.00	1.00	1.00	1.00	1.00	1.00	1.00	1.00	1.00	1.00	1.00
MLF Adj:	1.00	1.00	1.00	1.00	1.00	1.00	1.00	1.00	1.00	1.00	1.00	1.00
FinalVolume:	83	497	25	196	682	340	516	803	76	202	848	230
Saturation Flow Module:												
Sat/Lane:	1600	1600	1600	1600	1600	1600	1600	1600	1600	1600	1600	1600
Adjustment:	1.00	1.00	1.00	1.00	1.00	1.00	1.00	1.00	1.00	1.00	1.00	1.00
Lanes:	1.00	2.86	0.14	1.00	2.00	1.00	2.00	2.74	0.26	1.00	3.00	1.00
Final Sat.:	1600	4573	227	1600	3200	1600	3200	4387	413	1600	4800	1600
Capacity Analysis Module:												
Vol/Sat:	0.05	0.11	0.11	0.12	0.21	0.21	0.16	0.18	0.18	0.13	0.18	0.14
Crit Moves:	****				****		****				****	

Newport Banning Ranch
Year 2016 without Project - TPO Analysis
PM Peak Hour

Level Of Service Computation Report
ICU 1(Loss as Cycle Length %) Method (Future Volume Alternative)

Intersection #34 Newport Blvd/19th St

Cycle (sec):	120	Critical Vol./Cap.(X):	0.831
Loss Time (sec):	0 (Y+R=4.0 sec)	Average Delay (sec/veh):	xxxxxx
Optimal Cycle:	135	Level Of Service:	D

Street Name:	Newport Boulevard						19th Street					
Approach:	North Bound			South Bound			East Bound			West Bound		
Movement:	L - T - R			L - T - R			L - T - R			L - T - R		
Control:	Protected			Protected			Split Phase			Split Phase		
Rights:	Include			Include			Include			Include		
Min. Green:	0	0	0	0	0	0	0	0	0	0	0	0
Lanes:	1 0	3 1	0	1 0	3 1	1	2 1	1 0	1	1 0	2 1	1
Volume Module:												
Base Vol:	65	2649	38	202	3114	757	731	171	33	54	321	152
Growth Adj:	1.07	1.07	1.07	1.07	1.07	1.07	1.07	1.07	1.07	1.07	1.07	1.07
Initial Bse:	70	2840	41	217	3338	812	784	183	35	58	344	163
Added Vol:	0	0	0	0	0	0	0	0	0	0	0	0
Committed P:	0	21	0	0	31	0	0	0	11	0	0	0
Initial Fut:	70	2861	41	217	3369	812	784	183	46	58	344	163
User Adj:	1.00	1.00	1.00	1.00	1.00	1.00	1.00	1.00	1.00	1.00	1.00	1.00
PHF Adj:	1.00	1.00	1.00	1.00	1.00	1.00	1.00	1.00	1.00	1.00	1.00	1.00
PHF Volume:	70	2861	41	217	3369	812	784	183	46	58	344	163
Reduct Vol:	0	0	0	0	0	0	0	0	0	0	0	0
Reduced Vol:	70	2861	41	217	3369	812	784	183	46	58	344	163
PCE Adj:	1.00	1.00	1.00	1.00	1.00	1.00	1.00	1.00	1.00	1.00	1.00	1.00
MLF Adj:	1.00	1.00	1.00	1.00	1.00	1.00	1.00	1.00	1.00	1.00	1.00	1.00
FinalVolume:	70	2861	41	217	3369	812	784	183	46	58	344	163
Saturation Flow Module:												
Sat/Lane:	1600	1600	1600	1600	1600	1600	1600	1600	1600	1600	1600	1600
Adjustment:	1.00	1.00	1.00	1.00	1.00	1.00	1.00	1.00	1.00	1.00	1.00	1.00
Lanes:	1.00	3.94	0.06	1.00	4.00	1.00	3.00	1.00	1.00	1.00	2.71	1.29
Final Sat.:	1600	6310	90	1600	6400	1600	4800	1600	1600	1600	4343	2057
Capacity Analysis Module:												
Vol/Sat:	0.04	0.45	0.45	0.14	0.53	0.51	0.16	0.11	0.03	0.04	0.08	0.08
Crit Moves:		****		****			****				****	

Newport Banning Ranch
Year 2016 without Project - TPO Analysis
PM Peak Hour

Level Of Service Computation Report
ICU 1(Loss as Cycle Length %) Method (Future Volume Alternative)

Intersection #35 Newport Blvd/Broadway

Cycle (sec):	120	Critical Vol./Cap.(X):	0.784
Loss Time (sec):	0 (Y+R=4.0 sec)	Average Delay (sec/veh):	xxxxxx
Optimal Cycle:	86	Level Of Service:	C

Street Name:	Newport Boulevard									Broadway								
Approach:	North Bound				South Bound				East Bound					West Bound				
Movement:	L	-	T	-	R	L	-	T	-	R	L	-	T	-	R	L	-	T	-	R
Control:	Protected					Protected					Permitted					Permitted				
Rights:	Include					Include					Include					Include				
Min. Green:	0	0	0			0	0	0			0	0	0			0	0	0		
Lanes:	1	0	3	1	0	1	0	3	0	1	0	1	0	0	1	1	0	0	1	0
Volume Module:																				
Base Vol:	7	2542		55		142	3061		62		18		23		14	33		15		95
Growth Adj:	1.07	1.07		1.07		1.07	1.07		1.07		1.07		1.07		1.07	1.07		1.07		1.07
Initial Bse:	8	2725		59		152	3281		66		19		25		15	35		16		102
Added Vol:	0	0		0		0	0		0		0		0		0	0		0		0
Committed P:	0	25		0		0	48		0		0		0		0	0		0		0
Initial Fut:	8	2750		59		152	3329		66		19		25		15	35		16		102
User Adj:	1.00	1.00		1.00		1.00	1.00		1.00		1.00		1.00		1.00	1.00		1.00		1.00
PHF Adj:	1.00	1.00		1.00		1.00	1.00		1.00		1.00		1.00		1.00	1.00		1.00		1.00
PHF Volume:	8	2750		59		152	3329		66		19		25		15	35		16		102
Reduct Vol:	0	0		0		0	0		0		0		0		0	0		0		0
Reduced Vol:	8	2750		59		152	3329		66		19		25		15	35		16		102
PCE Adj:	1.00	1.00		1.00		1.00	1.00		1.00		1.00		1.00		1.00	1.00		1.00		1.00
MLF Adj:	1.00	1.00		1.00		1.00	1.00		1.00		1.00		1.00		1.00	1.00		1.00		1.00
FinalVolume:	8	2750		59		152	3329		66		19		25		15	35		16		102
Saturation Flow Module:																				
Sat/Lane:	1600	1600		1600		1600	1600		1600		1600		1600		1600	1600		1600		1600
Adjustment:	1.00	1.00		1.00		1.00	1.00		1.00		1.00		1.00		1.00	1.00		1.00		1.00
Lanes:	1.00	3.92		0.08		1.00	3.00		1.00		0.44		0.56		1.00	1.00		0.14		0.86
Final Sat.:	1600	6266		134		1600	4800		1600		702		898		1600	1600		218		1382
Capacity Analysis Module:																				
Vol/Sat:	0.00	0.44		0.44		0.10	0.69		0.04		0.01		0.03		0.01	0.02		0.07		0.07
Crit Moves:	****						****				****							****		

Newport Banning Ranch
Year 2016 without Project - TPO Analysis
PM Peak Hour

Level Of Service Computation Report
ICU 1(Loss as Cycle Length %) Method (Future Volume Alternative)

Intersection #36 Newport Blvd/Harbor Blvd

Cycle (sec):	120	Critical Vol./Cap.(X):	1.062
Loss Time (sec):	0 (Y+R=4.0 sec)	Average Delay (sec/veh):	xxxxxx
Optimal Cycle:	180	Level Of Service:	F

Street Name:	Newport Boulevard						Harbor Boulevard					
Approach:	North Bound			South Bound			East Bound			West Bound		
Movement:	L - T - R			L - T - R			L - T - R			L - T - R		
Control:	Protected			Protected			Protected			Protected		
Rights:	Include			Include			Ovl			Include		
Min. Green:	0	0	0	0	0	0	0	0	0	0	0	0
Lanes:	2 0 4 0 0			0 0 2 1 0			1 0 0 0 2			0 0 0 0 0		
Volume Module:												
Base Vol:	726	2480	0	0	3160	50	123	0	537	0	0	0
Growth Adj:	1.07	1.07	1.07	1.07	1.07	1.07	1.07	1.07	1.07	1.07	1.07	1.07
Initial Bse:	778	2659	0	0	3388	54	132	0	576	0	0	0
Added Vol:	0	0	0	0	0	0	0	0	0	0	0	0
Committed P:	27	28	0	0	51	0	0	0	50	0	0	0
Initial Fut:	805	2687	0	0	3439	54	132	0	626	0	0	0
User Adj:	1.00	1.00	1.00	1.00	1.00	1.00	1.00	1.00	1.00	1.00	1.00	1.00
PHF Adj:	1.00	1.00	1.00	1.00	1.00	1.00	1.00	1.00	1.00	1.00	1.00	1.00
PHF Volume:	805	2687	0	0	3439	54	132	0	626	0	0	0
Reduct Vol:	0	0	0	0	0	0	0	0	0	0	0	0
Reduced Vol:	805	2687	0	0	3439	54	132	0	626	0	0	0
PCE Adj:	1.00	1.00	1.00	1.00	1.00	1.00	1.00	1.00	1.00	1.00	1.00	1.00
MLF Adj:	1.00	1.00	1.00	1.00	1.00	1.00	1.00	1.00	1.00	1.00	1.00	1.00
FinalVolume:	805	2687	0	0	3439	54	132	0	626	0	0	0
OvlAdjVol:									0			
Saturation Flow Module:												
Sat/Lane:	1600	1600	1600	1600	1600	1600	1600	1600	1600	1600	1600	1600
Adjustment:	1.00	1.00	1.00	1.00	1.00	1.00	1.00	1.00	1.00	1.00	1.00	1.00
Lanes:	2.00	4.00	0.00	0.00	2.95	0.05	1.00	0.00	2.00	0.00	0.00	0.00
Final Sat.:	3200	6400	0	0	4726	74	1600	0	3200	0	0	0
Capacity Analysis Module:												
Vol/Sat:	0.25	0.42	0.00	0.00	0.73	0.73	0.08	0.00	0.20	0.00	0.00	0.00
OvlAdjV/S:									0.00			
Crit Moves:	****				****		****					

Newport Banning Ranch
Year 2016 without Project - TPO Analysis
PM Peak Hour

Level Of Service Computation Report
ICU 1(Loss as Cycle Length %) Method (Future Volume Alternative)

Intersection #37 Newport Blvd/18th St (Rochester St)

Cycle (sec):	120	Critical Vol./Cap.(X):	1.073
Loss Time (sec):	0 (Y+R=4.0 sec)	Average Delay (sec/veh):	xxxxxx
Optimal Cycle:	180	Level Of Service:	F

Street Name:	Newport Boulevard						18th Street (Rochester Street)					
Approach:	North Bound			South Bound			East Bound			West Bound		
Movement:	L - T - R			L - T - R			L - T - R			L - T - R		
Control:	Protected			Protected			Split Phase			Split Phase		
Rights:	Include			Include			Include			Include		
Min. Green:	0	0	0	0	0	0	0	0	0	0	0	0
Lanes:	1 0 3	1 0		1 0 3	0 1		2 0 1	0 1		1 0 0	1 0	
Volume Module:												
Base Vol:	111	2724	15	125	3515	144	251	75	48	18	124	22
Growth Adj:	1.07	1.07	1.07	1.07	1.07	1.07	1.07	1.07	1.07	1.07	1.07	1.07
Initial Bse:	119	2920	16	134	3768	154	269	80	51	19	133	24
Added Vol:	0	0	0	0	0	0	0	0	0	0	0	0
Committed P:	14	68	0	0	111	0	0	0	21	0	0	0
Initial Fut:	133	2988	16	134	3879	154	269	80	72	19	133	24
User Adj:	1.00	1.00	1.00	1.00	1.00	1.00	1.00	1.00	1.00	1.00	1.00	1.00
PHF Adj:	1.00	1.00	1.00	1.00	1.00	1.00	1.00	1.00	1.00	1.00	1.00	1.00
PHF Volume:	133	2988	16	134	3879	154	269	80	72	19	133	24
Reduct Vol:	0	0	0	0	0	0	0	0	0	0	0	0
Reduced Vol:	133	2988	16	134	3879	154	269	80	72	19	133	24
PCE Adj:	1.00	1.00	1.00	1.00	1.00	1.00	1.00	1.00	1.00	1.00	1.00	1.00
MLF Adj:	1.00	1.00	1.00	1.00	1.00	1.00	1.00	1.00	1.00	1.00	1.00	1.00
FinalVolume:	133	2988	16	134	3879	154	269	80	72	19	133	24
Saturation Flow Module:												
Sat/Lane:	1600	1600	1600	1600	1600	1600	1600	1600	1600	1600	1600	1600
Adjustment:	1.00	1.00	1.00	1.00	1.00	1.00	1.00	1.00	1.00	1.00	1.00	1.00
Lanes:	1.00	3.98	0.02	1.00	3.00	1.00	2.00	1.00	1.00	1.00	0.85	0.15
Final Sat.:	1600	6366	34	1600	4800	1600	3200	1600	1600	1600	1359	241
Capacity Analysis Module:												
Vol/Sat:	0.08	0.47	0.47	0.08	0.81	0.10	0.08	0.05	0.05	0.01	0.10	0.10
Crit Moves:	****				****		****					****

Newport Banning Ranch
Year 2016 without Project - TPO Analysis
PM Peak Hour

Level Of Service Computation Report
ICU 1(Loss as Cycle Length %) Method (Future Volume Alternative)

Intersection #38 Placentia Ave/18th St

Cycle (sec):	100	Critical Vol./Cap.(X):	0.498
Loss Time (sec):	0 (Y+R=4.0 sec)	Average Delay (sec/veh):	xxxxxx
Optimal Cycle:	37	Level Of Service:	A

Street Name:	Placentia Avenue						18th Street					
Approach:	North Bound			South Bound			East Bound			West Bound		
Movement:	L - T - R			L - T - R			L - T - R			L - T - R		
Control:	Protected			Protected			Permitted			Permitted		
Rights:	Include			Include			Include			Include		
Min. Green:	0	0	0	0	0	0	0	0	0	0	0	0
Lanes:	1 0	1 1	0	1 0	1 1	0	1 0	0 1	0	1 0	0 1	0
Volume Module:												
Base Vol:	14	889	58	45	523	47	60	169	27	16	87	80
Growth Adj:	1.06	1.06	1.06	1.06	1.06	1.06	1.06	1.06	1.06	1.06	1.06	1.06
Initial Bse:	15	944	62	48	555	50	64	179	29	17	92	85
Added Vol:	0	0	0	0	0	0	0	0	0	0	0	0
Committed P:	1	10	1	0	1	0	0	0	0	0	0	0
Initial Fut:	16	954	63	48	556	50	64	179	29	17	92	85
User Adj:	1.00	1.00	1.00	1.00	1.00	1.00	1.00	1.00	1.00	1.00	1.00	1.00
PHF Adj:	1.00	1.00	1.00	1.00	1.00	1.00	1.00	1.00	1.00	1.00	1.00	1.00
PHF Volume:	16	954	63	48	556	50	64	179	29	17	92	85
Reduct Vol:	0	0	0	0	0	0	0	0	0	0	0	0
Reduced Vol:	16	954	63	48	556	50	64	179	29	17	92	85
PCE Adj:	1.00	1.00	1.00	1.00	1.00	1.00	1.00	1.00	1.00	1.00	1.00	1.00
MLF Adj:	1.00	1.00	1.00	1.00	1.00	1.00	1.00	1.00	1.00	1.00	1.00	1.00
FinalVolume:	16	954	63	48	556	50	64	179	29	17	92	85
Saturation Flow Module:												
Sat/Lane:	1600	1600	1600	1600	1600	1600	1600	1600	1600	1600	1600	1600
Adjustment:	1.00	1.00	1.00	1.00	1.00	1.00	1.00	1.00	1.00	1.00	1.00	1.00
Lanes:	1.00	1.88	0.12	1.00	1.84	0.16	1.00	0.86	0.14	1.00	0.52	0.48
Final Sat.:	1600	3003	197	1600	2937	263	1600	1380	220	1600	834	766
Capacity Analysis Module:												
Vol/Sat:	0.01	0.32	0.32	0.03	0.19	0.19	0.04	0.13	0.13	0.01	0.11	0.11
Crit Moves:		****		****			****				****	

Newport Banning Ranch
Year 2016 without Project - TPO Analysis
PM Peak Hour

Level Of Service Computation Report
2000 HCM 4-Way Stop Method (Future Volume Alternative)

Intersection #39 Whittier Ave/17th St

Cycle (sec):	100	Critical Vol./Cap.(X):	0.118
Loss Time (sec):	0 (Y+R=4.0 sec)	Average Delay (sec/veh):	7.4
Optimal Cycle:	0	Level Of Service:	A

Street Name:	Whittier Avenue						17th St					
Approach:	North Bound			South Bound			East Bound			West Bound		
Movement:	L -	T -	R	L -	T -	R	L -	T -	R	L -	T -	R
Control:	Stop Sign			Stop Sign			Stop Sign			Stop Sign		
Rights:	Include			Include			Include			Include		
Min. Green:	0	0	0	0	0	0	0	0	0	0	0	0
Lanes:	0 0	0 1	0	0 0	1! 0	0	0 1	0 0	0	0 0	1! 0	0
Volume Module:												
Base Vol:	0	11	8	62	9	3	2	14	0	14	9	83
Growth Adj:	1.06	1.06	1.06	1.06	1.06	1.06	1.06	1.06	1.06	1.06	1.06	1.06
Initial Bse:	0	12	8	66	10	3	2	15	0	15	10	88
Added Vol:	0	0	0	0	0	0	0	0	0	0	0	0
Committed P:	0	0	0	0	0	0	0	0	0	0	0	0
Initial Fut:	0	12	8	66	10	3	2	15	0	15	10	88
User Adj:	1.00	1.00	1.00	1.00	1.00	1.00	1.00	1.00	1.00	1.00	1.00	1.00
PHF Adj:	1.00	1.00	1.00	1.00	1.00	1.00	1.00	1.00	1.00	1.00	1.00	1.00
PHF Volume:	0	12	8	66	10	3	2	15	0	15	10	88
Reduct Vol:	0	0	0	0	0	0	0	0	0	0	0	0
Reduced Vol:	0	12	8	66	10	3	2	15	0	15	10	88
PCE Adj:	1.00	1.00	1.00	1.00	1.00	1.00	1.00	1.00	1.00	1.00	1.00	1.00
MLF Adj:	1.00	1.00	1.00	1.00	1.00	1.00	1.00	1.00	1.00	1.00	1.00	1.00
FinalVolume:	0	12	8	66	10	3	2	15	0	15	10	88
Saturation Flow Module:												
Adjustment:	1.00	1.00	1.00	1.00	1.00	1.00	1.00	1.00	1.00	1.00	1.00	1.00
Lanes:	0.00	0.58	0.42	0.84	0.12	0.04	0.12	0.88	0.00	0.13	0.08	0.79
Final Sat.:	0	507	369	681	99	33	103	724	0	126	81	747
Capacity Analysis Module:												
Vol/Sat:	xxxx	0.02	0.02	0.10	0.10	0.10	0.02	0.02	xxxx	0.12	0.12	0.12
Crit Moves:		****			****			****			****	
Delay/Veh:	0.0	7.1	7.1	7.8	7.8	7.8	7.3	7.3	0.0	7.2	7.2	7.2
Delay Adj:	1.00	1.00	1.00	1.00	1.00	1.00	1.00	1.00	1.00	1.00	1.00	1.00
AdjDel/Veh:	0.0	7.1	7.1	7.8	7.8	7.8	7.3	7.3	0.0	7.2	7.2	7.2
LOS by Move:	*	A	A	A	A	A	A	A	*	A	A	A
ApproachDel:		7.1			7.8			7.3			7.2	
Delay Adj:		1.00			1.00			1.00			1.00	
ApprAdjDel:		7.1			7.8			7.3			7.2	
LOS by Appr:		A			A			A			A	
AllWayAvgQ:	0.0	0.0	0.0	0.1	0.1	0.1	0.0	0.0	0.0	0.1	0.1	0.1

Newport Banning Ranch
Year 2016 without Project - TPO Analysis
PM Peak Hour

Note: Queue reported is the number of cars per lane.

Newport Banning Ranch
Year 2016 without Project - TPO Analysis
PM Peak Hour

Level Of Service Computation Report
2000 HCM 4-Way Stop Method (Future Volume Alternative)

Intersection #40 Monrovia Ave/17th St

Cycle (sec):	100	Critical Vol./Cap.(X):	0.275
Loss Time (sec):	0 (Y+R=4.0 sec)	Average Delay (sec/veh):	9.0
Optimal Cycle:	0	Level Of Service:	A

Street Name:	Monrovia Avenue						17th Street					
Approach:	North Bound			South Bound			East Bound			West Bound		
Movement:	L -	T -	R	L -	T -	R	L -	T -	R	L -	T -	R
Control:	Stop Sign			Stop Sign			Stop Sign			Stop Sign		
Rights:	Include			Include			Include			Include		
Min. Green:	0	0	0	0	0	0	0	0	0	0	0	0
Lanes:	0 0	1! 0	0	0 0	1! 0	0	0 0	1! 0	0	0 0	1! 0	0
Volume Module:												
Base Vol:	25	120	46	43	65	12	14	79	43	21	77	47
Growth Adj:	1.06	1.06	1.06	1.06	1.06	1.06	1.06	1.06	1.06	1.06	1.06	1.06
Initial Bse:	27	127	49	46	69	13	15	84	46	22	82	50
Added Vol:	0	0	0	0	0	0	0	0	0	0	0	0
Committed P:	0	0	0	0	0	0	0	0	0	0	0	0
Initial Fut:	27	127	49	46	69	13	15	84	46	22	82	50
User Adj:	1.00	1.00	1.00	1.00	1.00	1.00	1.00	1.00	1.00	1.00	1.00	1.00
PHF Adj:	1.00	1.00	1.00	1.00	1.00	1.00	1.00	1.00	1.00	1.00	1.00	1.00
PHF Volume:	27	127	49	46	69	13	15	84	46	22	82	50
Reduct Vol:	0	0	0	0	0	0	0	0	0	0	0	0
Reduced Vol:	27	127	49	46	69	13	15	84	46	22	82	50
PCE Adj:	1.00	1.00	1.00	1.00	1.00	1.00	1.00	1.00	1.00	1.00	1.00	1.00
MLF Adj:	1.00	1.00	1.00	1.00	1.00	1.00	1.00	1.00	1.00	1.00	1.00	1.00
FinalVolume:	27	127	49	46	69	13	15	84	46	22	82	50
Saturation Flow Module:												
Adjustment:	1.00	1.00	1.00	1.00	1.00	1.00	1.00	1.00	1.00	1.00	1.00	1.00
Lanes:	0.13	0.63	0.24	0.36	0.54	0.10	0.10	0.58	0.32	0.14	0.54	0.32
Final Sat.:	97	464	178	250	378	70	74	418	228	105	384	234
Capacity Analysis Module:												
Vol/Sat:	0.27	0.27	0.27	0.18	0.18	0.18	0.20	0.20	0.20	0.21	0.21	0.21
Crit Moves:	****				****			****			****	
Delay/Veh:	9.3	9.3	9.3	8.8	8.8	8.8	8.8	8.8	8.8	8.8	8.8	8.8
Delay Adj:	1.00	1.00	1.00	1.00	1.00	1.00	1.00	1.00	1.00	1.00	1.00	1.00
AdjDel/Veh:	9.3	9.3	9.3	8.8	8.8	8.8	8.8	8.8	8.8	8.8	8.8	8.8
LOS by Move:	A	A	A	A	A	A	A	A	A	A	A	A
ApproachDel:	9.3			8.8			8.8			8.8		
Delay Adj:	1.00			1.00			1.00			1.00		
ApprAdjDel:	9.3			8.8			8.8			8.8		
LOS by Appr:	A			A			A			A		
AllWayAvgQ:	0.3	0.3	0.3	0.2	0.2	0.2	0.2	0.2	0.2	0.2	0.2	0.2

Newport Banning Ranch
Year 2016 without Project - TPO Analysis
PM Peak Hour

Note: Queue reported is the number of cars per lane.

Newport Banning Ranch
Year 2016 without Project - TPO Analysis
PM Peak Hour

Level Of Service Computation Report
ICU 1(Loss as Cycle Length %) Method (Future Volume Alternative)

Intersection #41 Placentia Ave/17th St

Cycle (sec):	100	Critical Vol./Cap.(X):	0.556
Loss Time (sec):	0 (Y+R=4.0 sec)	Average Delay (sec/veh):	xxxxxx
Optimal Cycle:	32	Level Of Service:	A

Street Name:	Placentia Avenue						17th St					
Approach:	North Bound			South Bound			East Bound			West Bound		
Movement:	L - T - R			L - T - R			L - T - R			L - T - R		
Control:	Permitted			Permitted			Permitted			Permitted		
Rights:	Include			Include			Include			Include		
Min. Green:	0	0	0	0	0	0	0	0	0	0	0	0
Lanes:	1 0	1 1	0	1 0	1 1	0	1 0	0 1	0	1 0	0 1	0
Volume Module:												
Base Vol:	49	668	69	113	387	26	52	151	34	37	108	187
Growth Adj:	1.06	1.06	1.06	1.06	1.06	1.06	1.06	1.06	1.06	1.06	1.06	1.06
Initial Bse:	52	709	73	120	411	28	55	160	36	39	115	199
Added Vol:	0	0	0	0	0	0	0	0	0	0	0	0
Committed P:	4	15	4	0	4	0	0	0	2	0	0	0
Initial Fut:	56	724	77	120	415	28	55	160	38	39	115	199
User Adj:	1.00	1.00	1.00	1.00	1.00	1.00	1.00	1.00	1.00	1.00	1.00	1.00
PHF Adj:	1.00	1.00	1.00	1.00	1.00	1.00	1.00	1.00	1.00	1.00	1.00	1.00
PHF Volume:	56	724	77	120	415	28	55	160	38	39	115	199
Reduct Vol:	0	0	0	0	0	0	0	0	0	0	0	0
Reduced Vol:	56	724	77	120	415	28	55	160	38	39	115	199
PCE Adj:	1.00	1.00	1.00	1.00	1.00	1.00	1.00	1.00	1.00	1.00	1.00	1.00
MLF Adj:	1.00	1.00	1.00	1.00	1.00	1.00	1.00	1.00	1.00	1.00	1.00	1.00
FinalVolume:	56	724	77	120	415	28	55	160	38	39	115	199
Saturation Flow Module:												
Sat/Lane:	1600	1600	1600	1600	1600	1600	1600	1600	1600	1600	1600	1600
Adjustment:	1.00	1.00	1.00	1.00	1.00	1.00	1.00	1.00	1.00	1.00	1.00	1.00
Lanes:	1.00	1.81	0.19	1.00	1.88	0.12	1.00	0.81	0.19	1.00	0.37	0.63
Final Sat.:	1600	2892	308	1600	3000	200	1600	1293	307	1600	586	1014
Capacity Analysis Module:												
Vol/Sat:	0.04	0.25	0.25	0.07	0.14	0.14	0.03	0.12	0.12	0.02	0.20	0.20
Crit Moves:		****		****			****				****	

Newport Banning Ranch
Year 2016 without Project - TPO Analysis
PM Peak Hour

Level Of Service Computation Report
2000 HCM 4-Way Stop Method (Future Volume Alternative)

Intersection #42 Pomona Ave/17th St

Cycle (sec):	100	Critical Vol./Cap.(X):	0.646
Loss Time (sec):	0 (Y+R=4.0 sec)	Average Delay (sec/veh):	15.5
Optimal Cycle:	0	Level Of Service:	C

Street Name:	Pomona Avenue						17th Street					
Approach:	North Bound			South Bound			East Bound			West Bound		
Movement:	L -	T -	R	L -	T -	R	L -	T -	R	L -	T -	R
Control:	Stop Sign			Stop Sign			Stop Sign			Stop Sign		
Rights:	Include			Include			Include			Include		
Min. Green:	0	0	0	0	0	0	0	0	0	0	0	0
Lanes:	0 0	1! 0	0	0 0	1! 0	0	1 0	0 1	0	1 0	1 0	1
Volume Module:												
Base Vol:	20	130	53	65	86	32	52	308	16	43	297	102
Growth Adj:	1.07	1.07	1.07	1.07	1.07	1.07	1.07	1.07	1.07	1.07	1.07	1.07
Initial Bse:	21	139	57	70	92	34	56	330	17	46	318	109
Added Vol:	0	0	0	0	0	0	0	0	0	0	0	0
Committed P:	0	0	0	0	0	0	0	0	0	0	0	0
Initial Fut:	21	139	57	70	92	34	56	330	17	46	318	109
User Adj:	1.00	1.00	1.00	1.00	1.00	1.00	1.00	1.00	1.00	1.00	1.00	1.00
PHF Adj:	1.00	1.00	1.00	1.00	1.00	1.00	1.00	1.00	1.00	1.00	1.00	1.00
PHF Volume:	21	139	57	70	92	34	56	330	17	46	318	109
Reduct Vol:	0	0	0	0	0	0	0	0	0	0	0	0
Reduced Vol:	21	139	57	70	92	34	56	330	17	46	318	109
PCE Adj:	1.00	1.00	1.00	1.00	1.00	1.00	1.00	1.00	1.00	1.00	1.00	1.00
MLF Adj:	1.00	1.00	1.00	1.00	1.00	1.00	1.00	1.00	1.00	1.00	1.00	1.00
FinalVolume:	21	139	57	70	92	34	56	330	17	46	318	109
Saturation Flow Module:												
Adjustment:	1.00	1.00	1.00	1.00	1.00	1.00	1.00	1.00	1.00	1.00	1.00	1.00
Lanes:	0.10	0.64	0.26	0.36	0.47	0.17	1.00	0.95	0.05	1.00	1.00	1.00
Final Sat.:	50	327	133	176	233	87	494	511	27	499	539	599
Capacity Analysis Module:												
Vol/Sat:	0.43	0.43	0.43	0.40	0.40	0.40	0.11	0.65	0.65	0.09	0.59	0.18
Crit Moves:		****				****		****			****	
Delay/Veh:	13.6	13.6	13.6	13.4	13.4	13.4	10.6	19.5	19.5	10.4	17.5	9.7
Delay Adj:	1.00	1.00	1.00	1.00	1.00	1.00	1.00	1.00	1.00	1.00	1.00	1.00
AdjDel/Veh:	13.6	13.6	13.6	13.4	13.4	13.4	10.6	19.5	19.5	10.4	17.5	9.7
LOS by Move:	B	B	B	B	B	B	B	C	C	B	C	A
ApproachDel:		13.6			13.4			18.2			15.0	
Delay Adj:		1.00			1.00			1.00			1.00	
ApprAdjDel:		13.6			13.4			18.2			15.0	
LOS by Appr:		B			B			C			B	
AllWayAvgQ:	0.6	0.6	0.6	0.5	0.5	0.5	0.1	1.5	1.5	0.1	1.2	0.2

Newport Banning Ranch
Year 2016 without Project - TPO Analysis
PM Peak Hour

Note: Queue reported is the number of cars per lane.

Newport Banning Ranch
Year 2016 without Project - TPO Analysis
PM Peak Hour

Level Of Service Computation Report
ICU 1(Loss as Cycle Length %) Method (Future Volume Alternative)

Intersection #43 Superior Ave/17th St

Cycle (sec):	100	Critical Vol./Cap.(X):	0.812
Loss Time (sec):	0 (Y+R=4.0 sec)	Average Delay (sec/veh):	xxxxxx
Optimal Cycle:	121	Level Of Service:	D

Street Name:	Superior Avenue						17th Street					
Approach:	North Bound			South Bound			East Bound			West Bound		
Movement:	L - T - R			L - T - R			L - T - R			L - T - R		
Control:	Prot+Permit			Prot+Permit			Prot+Permit			Prot+Permit		
Rights:	Include			Include			Include			Include		
Min. Green:	0	0	0	0	0	0	0	0	0	0	0	0
Lanes:	1 0 0 1 1			1 0 1 1 0			1 0 1 1 0			1 0 1 1 0		
Volume Module:												
Base Vol:	100	184	620	89	287	84	25	497	65	423	436	81
Growth Adj:	1.07	1.07	1.07	1.07	1.07	1.07	1.07	1.07	1.07	1.07	1.07	1.07
Initial Bse:	107	197	665	95	308	90	27	533	70	453	467	87
Added Vol:	0	0	0	0	0	0	0	0	0	0	0	0
Committed P:	3	25	0	0	101	0	0	0	11	0	0	0
Initial Fut:	110	222	665	95	409	90	27	533	81	453	467	87
User Adj:	1.00	1.00	1.00	1.00	1.00	1.00	1.00	1.00	1.00	1.00	1.00	1.00
PHF Adj:	1.00	1.00	1.00	1.00	1.00	1.00	1.00	1.00	1.00	1.00	1.00	1.00
PHF Volume:	110	222	665	95	409	90	27	533	81	453	467	87
Reduct Vol:	0	0	0	0	0	0	0	0	0	0	0	0
Reduced Vol:	110	222	665	95	409	90	27	533	81	453	467	87
PCE Adj:	1.00	1.00	1.00	1.00	1.00	1.00	1.00	1.00	1.00	1.00	1.00	1.00
MLF Adj:	1.00	1.00	1.00	1.00	1.00	1.00	1.00	1.00	1.00	1.00	1.00	1.00
FinalVolume:	110	222	665	95	409	90	27	533	81	453	467	87
Saturation Flow Module:												
Sat/Lane:	1600	1600	1600	1600	1600	1600	1600	1600	1600	1600	1600	1600
Adjustment:	1.00	1.00	1.00	1.00	1.00	1.00	1.00	1.00	1.00	1.00	1.00	1.00
Lanes:	1.00	0.50	1.50	1.00	1.64	0.36	1.00	1.74	0.26	1.00	1.69	0.31
Final Sat.:	1600	802	2398	1600	2622	578	1600	2779	421	1600	2699	501
Capacity Analysis Module:												
Vol/Sat:	0.07	0.28	0.28	0.06	0.16	0.16	0.02	0.19	0.19	0.28	0.17	0.17
Crit Moves:		****		****				****		****		

Newport Banning Ranch
Year 2016 without Project - TPO Analysis
PM Peak Hour

Level Of Service Computation Report
ICU 1(Loss as Cycle Length %) Method (Future Volume Alternative)

Intersection #44 Newport Blvd/17th St

Cycle (sec):	120	Critical Vol./Cap.(X):	0.875
Loss Time (sec):	0 (Y+R=4.0 sec)	Average Delay (sec/veh):	xxxxxx
Optimal Cycle:	180	Level Of Service:	D

Street Name:	Newport Boulevard						17th Street					
Approach:	North Bound			South Bound			East Bound			West Bound		
Movement:	L - T - R			L - T - R			L - T - R			L - T - R		
Control:	Protected			Protected			Protected			Protected		
Rights:	Include			Include			Include			Include		
Min. Green:	0	0	0	0	0	0	0	0	0	0	0	0
Lanes:	1 0 3	1 0		2 0 3	0 1		3 0 1	1 0		2 0 3	0 1	
Volume Module:												
Base Vol:	63	1820	169	714	2315	347	707	393	22	276	485	201
Growth Adj:	1.07	1.07	1.07	1.07	1.07	1.07	1.07	1.07	1.07	1.07	1.07	1.07
Initial Bse:	68	1951	181	765	2482	372	758	421	24	296	520	215
Added Vol:	0	0	0	0	0	0	0	0	0	0	0	0
Committed P:	0	67	0	0	51	0	0	0	0	0	0	0
Initial Fut:	68	2018	181	765	2533	372	758	421	24	296	520	215
User Adj:	1.00	1.00	1.00	1.00	1.00	1.00	1.00	1.00	1.00	1.00	1.00	1.00
PHF Adj:	1.00	1.00	1.00	1.00	1.00	1.00	1.00	1.00	1.00	1.00	1.00	1.00
PHF Volume:	68	2018	181	765	2533	372	758	421	24	296	520	215
Reduct Vol:	0	0	0	0	0	0	0	0	0	0	0	0
Reduced Vol:	68	2018	181	765	2533	372	758	421	24	296	520	215
PCE Adj:	1.00	1.00	1.00	1.00	1.00	1.00	1.00	1.00	1.00	1.00	1.00	1.00
MLF Adj:	1.00	1.00	1.00	1.00	1.00	1.00	1.00	1.00	1.00	1.00	1.00	1.00
FinalVolume:	68	2018	181	765	2533	372	758	421	24	296	520	215
Saturation Flow Module:												
Sat/Lane:	1600	1600	1600	1600	1600	1600	1600	1600	1600	1600	1600	1600
Adjustment:	1.00	1.00	1.00	1.00	1.00	1.00	1.00	1.00	1.00	1.00	1.00	1.00
Lanes:	1.00	3.67	0.33	2.00	3.00	1.00	3.00	1.89	0.11	2.00	3.00	1.00
Final Sat.:	1600	5873	527	3200	4800	1600	4800	3030	170	3200	4800	1600
Capacity Analysis Module:												
Vol/Sat:	0.04	0.34	0.34	0.24	0.53	0.23	0.16	0.14	0.14	0.09	0.11	0.13
Crit Moves:		****		****			****					****

Newport Banning Ranch
Year 2016 without Project - TPO Analysis
PM Peak Hour

Level Of Service Computation Report
ICU 1(Loss as Cycle Length %) Method (Future Volume Alternative)

Intersection #45 Orange Ave/17th St

Cycle (sec):	100	Critical Vol./Cap.(X):	0.655
Loss Time (sec):	0 (Y+R=4.0 sec)	Average Delay (sec/veh):	xxxxxx
Optimal Cycle:	66	Level Of Service:	B

Street Name:	Orange Avenue						17th Street					
Approach:	North Bound			South Bound			East Bound			West Bound		
Movement:	L - T - R			L - T - R			L - T - R			L - T - R		
Control:	Prot+Permit			Prot+Permit			Prot+Permit			Prot+Permit		
Rights:	Include			Include			Include			Include		
Min. Green:	0	0	0	0	0	0	0	0	0	0	0	0
Lanes:	1 0 1	1 0		1 0 1	0 1		1 0 2	0 1		1 0 2	0 1	
Volume Module:												
Base Vol:	168	276	68	214	204	121	140	910	157	83	895	198
Growth Adj:	1.07	1.07	1.07	1.07	1.07	1.07	1.07	1.07	1.07	1.07	1.07	1.07
Initial Bse:	180	296	73	229	219	130	150	976	168	89	959	212
Added Vol:	0	0	0	0	0	0	0	0	0	0	0	0
Committed P:	0	0	2	2	0	0	0	5	0	1	4	1
Initial Fut:	180	296	75	231	219	130	150	981	168	90	963	213
User Adj:	1.00	1.00	1.00	1.00	1.00	1.00	1.00	1.00	1.00	1.00	1.00	1.00
PHF Adj:	1.00	1.00	1.00	1.00	1.00	1.00	1.00	1.00	1.00	1.00	1.00	1.00
PHF Volume:	180	296	75	231	219	130	150	981	168	90	963	213
Reduct Vol:	0	0	0	0	0	0	0	0	0	0	0	0
Reduced Vol:	180	296	75	231	219	130	150	981	168	90	963	213
PCE Adj:	1.00	1.00	1.00	1.00	1.00	1.00	1.00	1.00	1.00	1.00	1.00	1.00
MLF Adj:	1.00	1.00	1.00	1.00	1.00	1.00	1.00	1.00	1.00	1.00	1.00	1.00
FinalVolume:	180	296	75	231	219	130	150	981	168	90	963	213
Saturation Flow Module:												
Sat/Lane:	1600	1600	1600	1600	1600	1600	1600	1600	1600	1600	1600	1600
Adjustment:	1.00	1.00	1.00	1.00	1.00	1.00	1.00	1.00	1.00	1.00	1.00	1.00
Lanes:	1.00	1.60	0.40	1.00	1.00	1.00	1.00	2.00	1.00	1.00	2.00	1.00
Final Sat.:	1600	2554	646	1600	1600	1600	1600	3200	1600	1600	3200	1600
Capacity Analysis Module:												
Vol/Sat:	0.11	0.12	0.12	0.14	0.14	0.08	0.09	0.31	0.11	0.06	0.30	0.13
Crit Moves:		****		****			****				****	

Newport Banning Ranch
Year 2016 without Project - TPO Analysis
PM Peak Hour

Level Of Service Computation Report
ICU 1(Loss as Cycle Length %) Method (Future Volume Alternative)

Intersection #46 Santa Ana Ave/17th St

Cycle (sec):	100	Critical Vol./Cap.(X):	0.644
Loss Time (sec):	0 (Y+R=4.0 sec)	Average Delay (sec/veh):	xxxxxx
Optimal Cycle:	52	Level Of Service:	B

Street Name:	Santa Ana Avenue						17th Street					
Approach:	North Bound			South Bound			East Bound			West Bound		
Movement:	L - T - R			L - T - R			L - T - R			L - T - R		
Control:	Permitted			Permitted			Prot+Permit			Prot+Permit		
Rights:	Include			Include			Include			Include		
Min. Green:	0	0	0	0	0	0	0	0	0	0	0	0
Lanes:	1 0 1	0 1		1 0 1	0 1		1 0 2	0 1		1 0 2	0 1	
Volume Module:												
Base Vol:	126	173	94	115	170	88	96	937	69	147	1137	130
Growth Adj:	1.07	1.07	1.07	1.07	1.07	1.07	1.07	1.07	1.07	1.07	1.07	1.07
Initial Bse:	135	185	101	123	182	94	103	1004	74	158	1219	139
Added Vol:	0	0	0	0	0	0	0	0	0	0	0	0
Committed P:	0	0	5	5	0	0	0	12	0	3	9	3
Initial Fut:	135	185	106	128	182	94	103	1016	74	161	1228	142
User Adj:	1.00	1.00	1.00	1.00	1.00	1.00	1.00	1.00	1.00	1.00	1.00	1.00
PHF Adj:	1.00	1.00	1.00	1.00	1.00	1.00	1.00	1.00	1.00	1.00	1.00	1.00
PHF Volume:	135	185	106	128	182	94	103	1016	74	161	1228	142
Reduct Vol:	0	0	0	0	0	0	0	0	0	0	0	0
Reduced Vol:	135	185	106	128	182	94	103	1016	74	161	1228	142
PCE Adj:	1.00	1.00	1.00	1.00	1.00	1.00	1.00	1.00	1.00	1.00	1.00	1.00
MLF Adj:	1.00	1.00	1.00	1.00	1.00	1.00	1.00	1.00	1.00	1.00	1.00	1.00
FinalVolume:	135	185	106	128	182	94	103	1016	74	161	1228	142
Saturation Flow Module:												
Sat/Lane:	1600	1600	1600	1600	1600	1600	1600	1600	1600	1600	1600	1600
Adjustment:	1.00	1.00	1.00	1.00	1.00	1.00	1.00	1.00	1.00	1.00	1.00	1.00
Lanes:	1.00	1.00	1.00	1.00	1.00	1.00	1.00	2.00	1.00	1.00	2.00	1.00
Final Sat.:	1600	1600	1600	1600	1600	1600	1600	3200	1600	1600	3200	1600
Capacity Analysis Module:												
Vol/Sat:	0.08	0.12	0.07	0.08	0.11	0.06	0.06	0.32	0.05	0.10	0.38	0.09
Crit Moves:		****		****			****				****	

Newport Banning Ranch
Year 2016 without Project - TPO Analysis
PM Peak Hour

Level Of Service Computation Report
ICU 1(Loss as Cycle Length %) Method (Future Volume Alternative)

Intersection #47 Tustin Ave/17th St

Cycle (sec):	100	Critical Vol./Cap.(X):	0.700
Loss Time (sec):	0 (Y+R=4.0 sec)	Average Delay (sec/veh):	xxxxxx
Optimal Cycle:	62	Level Of Service:	B

Street Name:	Tustin Avenue						17th Street					
Approach:	North Bound			South Bound			East Bound			West Bound		
Movement:	L - T - R			L - T - R			L - T - R			L - T - R		
Control:	Permitted			Permitted			Prot+Permit			Prot+Permit		
Rights:	Include			Include			Include			Include		
Min. Green:	0	0	0	0	0	0	0	0	0	0	0	0
Lanes:	1 0 0	1 0		1 0	1 0 1		1 0	1 1 0		1 0	1 1 0	
Volume Module:												
Base Vol:	124	157	83	77	111	56	46	996	62	76	1243	82
Growth Adj:	1.07	1.07	1.07	1.07	1.07	1.07	1.07	1.07	1.07	1.07	1.07	1.07
Initial Bse:	133	168	89	83	119	60	49	1068	66	81	1332	88
Added Vol:	0	0	0	0	0	0	0	0	0	0	0	0
Committed P:	0	0	5	5	0	0	0	30	0	3	17	3
Initial Fut:	133	168	94	88	119	60	49	1098	66	84	1349	91
User Adj:	1.00	1.00	1.00	1.00	1.00	1.00	1.00	1.00	1.00	1.00	1.00	1.00
PHF Adj:	1.00	1.00	1.00	1.00	1.00	1.00	1.00	1.00	1.00	1.00	1.00	1.00
PHF Volume:	133	168	94	88	119	60	49	1098	66	84	1349	91
Reduct Vol:	0	0	0	0	0	0	0	0	0	0	0	0
Reduced Vol:	133	168	94	88	119	60	49	1098	66	84	1349	91
PCE Adj:	1.00	1.00	1.00	1.00	1.00	1.00	1.00	1.00	1.00	1.00	1.00	1.00
MLF Adj:	1.00	1.00	1.00	1.00	1.00	1.00	1.00	1.00	1.00	1.00	1.00	1.00
FinalVolume:	133	168	94	88	119	60	49	1098	66	84	1349	91
Saturation Flow Module:												
Sat/Lane:	1600	1600	1600	1600	1600	1600	1600	1600	1600	1600	1600	1600
Adjustment:	1.00	1.00	1.00	1.00	1.00	1.00	1.00	1.00	1.00	1.00	1.00	1.00
Lanes:	1.00	0.64	0.36	1.00	1.00	1.00	1.00	1.89	0.11	1.00	1.87	0.13
Final Sat.:	1600	1027	573	1600	1600	1600	1600	3017	183	1600	2998	202
Capacity Analysis Module:												
Vol/Sat:	0.08	0.16	0.16	0.05	0.07	0.04	0.03	0.36	0.36	0.05	0.45	0.45
Crit Moves:		****		****			****				****	

Newport Banning Ranch
Year 2016 without Project - TPO Analysis
PM Peak Hour

Level Of Service Computation Report
ICU 1(Loss as Cycle Length %) Method (Future Volume Alternative)

Intersection #48 Irvine Ave/17th St

Cycle (sec):	100	Critical Vol./Cap.(X):	0.685
Loss Time (sec):	0 (Y+R=4.0 sec)	Average Delay (sec/veh):	xxxxxx
Optimal Cycle:	72	Level Of Service:	B

Street Name:	Irvine Avenue						17th Street					
Approach:	North Bound			South Bound			East Bound			West Bound		
Movement:	L - T - R			L - T - R			L - T - R			L - T - R		
Control:	Protected			Protected			Protected			Protected		
Rights:	Include			Include			Include			Include		
Min. Green:	0	0	0	0	0	0	0	0	0	0	0	0
Lanes:	2 0	2 0	1	2 0	2 0	1	2 0	1 1	0	1 0	1 1	0
Volume Module:												
Base Vol:	373	623	49	168	528	334	233	570	200	101	646	61
Growth Adj:	1.07	1.07	1.07	1.07	1.07	1.07	1.07	1.07	1.07	1.07	1.07	1.07
Initial Bse:	400	668	53	180	566	358	250	611	214	108	693	65
Added Vol:	0	0	0	0	0	0	0	0	0	0	0	0
Committed P:	0	0	0	8	0	0	14	35	0	0	23	0
Initial Fut:	400	668	53	188	566	358	264	646	214	108	716	65
User Adj:	1.00	1.00	1.00	1.00	1.00	1.00	1.00	1.00	1.00	1.00	1.00	1.00
PHF Adj:	1.00	1.00	1.00	1.00	1.00	1.00	1.00	1.00	1.00	1.00	1.00	1.00
PHF Volume:	400	668	53	188	566	358	264	646	214	108	716	65
Reduct Vol:	0	0	0	0	0	0	0	0	0	0	0	0
Reduced Vol:	400	668	53	188	566	358	264	646	214	108	716	65
PCE Adj:	1.00	1.00	1.00	1.00	1.00	1.00	1.00	1.00	1.00	1.00	1.00	1.00
MLF Adj:	1.00	1.00	1.00	1.00	1.00	1.00	1.00	1.00	1.00	1.00	1.00	1.00
FinalVolume:	400	668	53	188	566	358	264	646	214	108	716	65
Saturation Flow Module:												
Sat/Lane:	1600	1600	1600	1600	1600	1600	1600	1600	1600	1600	1600	1600
Adjustment:	1.00	1.00	1.00	1.00	1.00	1.00	1.00	1.00	1.00	1.00	1.00	1.00
Lanes:	2.00	2.00	1.00	2.00	2.00	1.00	2.00	1.50	0.50	1.00	1.83	0.17
Final Sat.:	3200	3200	1600	3200	3200	1600	3200	2403	797	1600	2932	268
Capacity Analysis Module:												
Vol/Sat:	0.12	0.21	0.03	0.06	0.18	0.22	0.08	0.27	0.27	0.07	0.24	0.24
Crit Moves:	****					****		****		****		

Newport Banning Ranch
Year 2016 without Project - TPO Analysis
PM Peak Hour

Level Of Service Computation Report
ICU 1(Loss as Cycle Length %) Method (Future Volume Alternative)

Intersection #49 Placentia Ave/16th St

Cycle (sec):	100	Critical Vol./Cap.(X):	0.321
Loss Time (sec):	0 (Y+R=4.0 sec)	Average Delay (sec/veh):	xxxxxx
Optimal Cycle:	21	Level Of Service:	A

Street Name:	Placentia Avenue						16th Street					
Approach:	North Bound			South Bound			East Bound			West Bound		
Movement:	L - T - R			L - T - R			L - T - R			L - T - R		
Control:	Permitted			Permitted			Permitted			Permitted		
Rights:	Include			Include			Include			Include		
Min. Green:	0	0	0	0	0	0	0	0	0	0	0	0
Lanes:	1 0 1	1 0		1 0 1	1 0		1 0 0	1 0		1 0 0	1 0	
Volume Module:												
Base Vol:	34	530	22	21	381	20	64	42	59	21	28	82
Growth Adj:	1.06	1.06	1.06	1.06	1.06	1.06	1.06	1.06	1.06	1.06	1.06	1.06
Initial Bse:	36	563	23	22	404	21	68	45	63	22	30	87
Added Vol:	0	0	0	0	0	0	0	0	0	0	0	0
Committed P:	0	28	0	0	9	0	0	0	0	0	0	0
Initial Fut:	36	591	23	22	413	21	68	45	63	22	30	87
User Adj:	1.00	1.00	1.00	1.00	1.00	1.00	1.00	1.00	1.00	1.00	1.00	1.00
PHF Adj:	1.00	1.00	1.00	1.00	1.00	1.00	1.00	1.00	1.00	1.00	1.00	1.00
PHF Volume:	36	591	23	22	413	21	68	45	63	22	30	87
Reduct Vol:	0	0	0	0	0	0	0	0	0	0	0	0
Reduced Vol:	36	591	23	22	413	21	68	45	63	22	30	87
PCE Adj:	1.00	1.00	1.00	1.00	1.00	1.00	1.00	1.00	1.00	1.00	1.00	1.00
MLF Adj:	1.00	1.00	1.00	1.00	1.00	1.00	1.00	1.00	1.00	1.00	1.00	1.00
FinalVolume:	36	591	23	22	413	21	68	45	63	22	30	87
Saturation Flow Module:												
Sat/Lane:	1600	1600	1600	1600	1600	1600	1600	1600	1600	1600	1600	1600
Adjustment:	1.00	1.00	1.00	1.00	1.00	1.00	1.00	1.00	1.00	1.00	1.00	1.00
Lanes:	1.00	1.92	0.08	1.00	1.90	0.10	1.00	0.42	0.58	1.00	0.25	0.75
Final Sat.:	1600	3078	122	1600	3044	156	1600	665	935	1600	407	1193
Capacity Analysis Module:												
Vol/Sat:	0.02	0.19	0.19	0.01	0.14	0.14	0.04	0.07	0.07	0.01	0.07	0.07
Crit Moves:		****		****			****				****	

Newport Banning Ranch
Year 2016 without Project - TPO Analysis
PM Peak Hour

Level Of Service Computation Report
ICU 1(Loss as Cycle Length %) Method (Future Volume Alternative)

Intersection #50 Superior Ave/16th St

Cycle (sec):	100	Critical Vol./Cap.(X):	0.446
Loss Time (sec):	0 (Y+R=4.0 sec)	Average Delay (sec/veh):	xxxxxx
Optimal Cycle:	26	Level Of Service:	A

Street Name:	Superior Avenue						16th Street					
Approach:	North Bound			South Bound			East Bound			West Bound		
Movement:	L - T - R			L - T - R			L - T - R			L - T - R		
Control:	Permitted			Permitted			Permitted			Permitted		
Rights:	Include			Include			Include			Include		
Min. Green:	0	0	0	0	0	0	0	0	0	0	0	0
Lanes:	1 0 2	0	1	1 0 1	1	0	1 0 0	1	0	0 1 0	0	1
Volume Module:												
Base Vol:	23	699	23	25	864	43	30	94	0	16	87	14
Growth Adj:	1.07	1.07	1.07	1.07	1.07	1.07	1.07	1.07	1.07	1.07	1.07	1.07
Initial Bse:	25	749	25	27	926	46	32	101	0	17	93	15
Added Vol:	0	0	0	0	0	0	0	0	0	0	0	0
Committed P:	2	34	0	0	118	0	0	0	3	0	0	0
Initial Fut:	27	783	25	27	1044	46	32	101	3	17	93	15
User Adj:	1.00	1.00	1.00	1.00	1.00	1.00	1.00	1.00	1.00	1.00	1.00	1.00
PHF Adj:	1.00	1.00	1.00	1.00	1.00	1.00	1.00	1.00	1.00	1.00	1.00	1.00
PHF Volume:	27	783	25	27	1044	46	32	101	3	17	93	15
Reduct Vol:	0	0	0	0	0	0	0	0	0	0	0	0
Reduced Vol:	27	783	25	27	1044	46	32	101	3	17	93	15
PCE Adj:	1.00	1.00	1.00	1.00	1.00	1.00	1.00	1.00	1.00	1.00	1.00	1.00
MLF Adj:	1.00	1.00	1.00	1.00	1.00	1.00	1.00	1.00	1.00	1.00	1.00	1.00
FinalVolume:	27	783	25	27	1044	46	32	101	3	17	93	15
Saturation Flow Module:												
Sat/Lane:	1600	1600	1600	1600	1600	1600	1600	1600	1600	1600	1600	1600
Adjustment:	1.00	1.00	1.00	1.00	1.00	1.00	1.00	1.00	1.00	1.00	1.00	1.00
Lanes:	1.00	2.00	1.00	1.00	1.92	0.08	1.00	0.97	0.03	0.16	0.84	1.00
Final Sat.:	1600	3200	1600	1600	3065	135	1600	1554	46	249	1351	1600
Capacity Analysis Module:												
Vol/Sat:	0.02	0.24	0.02	0.02	0.34	0.34	0.02	0.06	0.06	0.01	0.07	0.01
Crit Moves:	****				****		****				****	

Newport Banning Ranch
Year 2016 without Project - TPO Analysis
PM Peak Hour

Level Of Service Computation Report
ICU 1(Loss as Cycle Length %) Method (Future Volume Alternative)

Intersection #51 Newport Blvd/16th St

Cycle (sec):	120	Critical Vol./Cap.(X):	0.599
Loss Time (sec):	0 (Y+R=4.0 sec)	Average Delay (sec/veh):	xxxxxx
Optimal Cycle:	46	Level Of Service:	A

Street Name:	Newport Boulevard						16th Street					
Approach:	North Bound			South Bound			East Bound			West Bound		
Movement:	L - T - R			L - T - R			L - T - R			L - T - R		
Control:	Protected			Protected			Permitted			Permitted		
Rights:	Include			Include			Include			Include		
Min. Green:	0	0	0	0	0	0	0	0	0	0	0	0
Lanes:	1 0 2	1 0		1 0 3	0 1		0 0 1!	0 0		0 0 1!	0 0	
Volume Module:												
Base Vol:	20	1402	50	85	2084	29	36	48	21	20	37	59
Growth Adj:	1.07	1.07	1.07	1.07	1.07	1.07	1.07	1.07	1.07	1.07	1.07	1.07
Initial Bse:	21	1503	54	91	2234	31	39	51	23	21	40	63
Added Vol:	0	0	0	0	0	0	0	0	0	0	0	0
Committed P:	3	67	12	0	51	0	0	0	5	9	0	0
Initial Fut:	24	1570	66	91	2285	31	39	51	28	30	40	63
User Adj:	1.00	1.00	1.00	1.00	1.00	1.00	1.00	1.00	1.00	1.00	1.00	1.00
PHF Adj:	1.00	1.00	1.00	1.00	1.00	1.00	1.00	1.00	1.00	1.00	1.00	1.00
PHF Volume:	24	1570	66	91	2285	31	39	51	28	30	40	63
Reduct Vol:	0	0	0	0	0	0	0	0	0	0	0	0
Reduced Vol:	24	1570	66	91	2285	31	39	51	28	30	40	63
PCE Adj:	1.00	1.00	1.00	1.00	1.00	1.00	1.00	1.00	1.00	1.00	1.00	1.00
MLF Adj:	1.00	1.00	1.00	1.00	1.00	1.00	1.00	1.00	1.00	1.00	1.00	1.00
FinalVolume:	24	1570	66	91	2285	31	39	51	28	30	40	63
Saturation Flow Module:												
Sat/Lane:	1600	1600	1600	1600	1600	1600	1600	1600	1600	1600	1600	1600
Adjustment:	1.00	1.00	1.00	1.00	1.00	1.00	1.00	1.00	1.00	1.00	1.00	1.00
Lanes:	1.00	2.88	0.12	1.00	3.00	1.00	0.33	0.44	0.23	0.23	0.30	0.47
Final Sat.:	1600	4607	193	1600	4800	1600	525	700	374	365	476	759
Capacity Analysis Module:												
Vol/Sat:	0.02	0.34	0.34	0.06	0.48	0.02	0.02	0.07	0.07	0.02	0.08	0.08
Crit Moves:	****				****		****				****	

Newport Banning Ranch
Year 2016 without Project - TPO Analysis
PM Peak Hour

Level Of Service Computation Report
ICU 1(Loss as Cycle Length %) Method (Future Volume Alternative)

Intersection #52 Bluff Rd/Victoria St

Cycle (sec):	100	Critical Vol./Cap.(X):	0.573
Loss Time (sec):	0 (Y+R=4.0 sec)	Average Delay (sec/veh):	xxxxxx
Optimal Cycle:	53	Level Of Service:	A

Street Name:	Bluff Road						Victoria St					
Approach:	North Bound			South Bound			East Bound			West Bound		
Movement:	L - T - R			L - T - R			L - T - R			L - T - R		
Control:	Protected			Protected			Protected			Protected		
Rights:	Include			Include			Include			Include		
Min. Green:	0	0	0	0	0	0	0	0	0	0	0	0
Lanes:	0 0 0 0 0			0 0 0 0 0			0 0 2 0 0			0 0 2 0 0		
Volume Module:												
Base Vol:	0	0	0	0	0	0	0	942	0	0	1709	0
Growth Adj:	1.00	1.00	1.00	1.00	1.00	1.00	1.00	1.07	1.00	1.00	1.07	1.00
Initial Bse:	0	0	0	0	0	0	0	1010	0	0	1832	0
Added Vol:	0	0	0	0	0	0	0	0	0	0	0	0
PasserByVol:	0	0	0	0	0	0	0	0	0	0	0	0
Initial Fut:	0	0	0	0	0	0	0	1010	0	0	1832	0
User Adj:	1.00	1.00	1.00	1.00	1.00	1.00	1.00	1.00	1.00	1.00	1.00	1.00
PHF Adj:	1.00	1.00	1.00	1.00	1.00	1.00	1.00	1.00	1.00	1.00	1.00	1.00
PHF Volume:	0	0	0	0	0	0	0	1010	0	0	1832	0
Reduct Vol:	0	0	0	0	0	0	0	0	0	0	0	0
Reduced Vol:	0	0	0	0	0	0	0	1010	0	0	1832	0
PCE Adj:	1.00	1.00	1.00	1.00	1.00	1.00	1.00	1.00	1.00	1.00	1.00	1.00
MLF Adj:	1.00	1.00	1.00	1.00	1.00	1.00	1.00	1.00	1.00	1.00	1.00	1.00
FinalVolume:	0	0	0	0	0	0	0	1010	0	0	1832	0
Saturation Flow Module:												
Sat/Lane:	1600	1600	1600	1600	1600	1600	1600	1600	1600	1600	1600	1600
Adjustment:	1.00	1.00	1.00	1.00	1.00	1.00	1.00	1.00	1.00	1.00	1.00	1.00
Lanes:	0.00	0.00	0.00	0.00	0.00	0.00	0.00	2.00	0.00	0.00	2.00	0.00
Final Sat.:	0	0	0	0	0	0	0	3200	0	0	3200	0
Capacity Analysis Module:												
Vol/Sat:	0.00	0.00	0.00	0.00	0.00	0.00	0.00	0.32	0.00	0.00	0.57	0.00
Crit Moves:							****				****	

Newport Banning Ranch
Year 2016 without Project - TPO Analysis
PM Peak Hour

Level Of Service Computation Report
ICU 1(Loss as Cycle Length %) Method (Future Volume Alternative)

Intersection #53 Bluff Rd/19th St

Cycle (sec):	100	Critical Vol./Cap.(X):	0.000
Loss Time (sec):	0 (Y+R=4.0 sec)	Average Delay (sec/veh):	xxxxxx
Optimal Cycle:	0	Level Of Service:	

Street Name:	Bluff Rd						19th Street					
Approach:	North Bound			South Bound			East Bound			West Bound		
Movement:	L - T - R			L - T - R			L - T - R			L - T - R		
Control:	Permitted			Permitted			Permitted			Permitted		
Rights:	Include			Include			Include			Include		
Min. Green:	0	0	0	0	0	0	0	0	0	0	0	0
Lanes:	0 0 1	0 1		0 1	0 0	0	0 0	0 0	0	0 0	1! 0	0
Volume Module:												
Base Vol:	0	0	0	0	0	0	0	0	0	0	0	0
Growth Adj:	0.00	0.00	0.00	0.00	0.00	0.00	0.00	0.00	0.00	0.00	0.00	0.00
Initial Bse:	0	0	0	0	0	0	0	0	0	0	0	0
Added Vol:	0	0	0	0	0	0	0	0	0	0	0	0
PasserByVol:	0	0	0	0	0	0	0	0	0	0	0	0
Initial Fut:	0	0	0	0	0	0	0	0	0	0	0	0
User Adj:	0.00	0.00	0.00	0.00	0.00	0.00	0.00	0.00	0.00	0.00	0.00	0.00
PHF Adj:	0.00	0.00	0.00	0.00	0.00	0.00	0.00	0.00	0.00	0.00	0.00	0.00
PHF Volume:	0	0	0	0	0	0	0	0	0	0	0	0
Reduct Vol:	0	0	0	0	0	0	0	0	0	0	0	0
Reduced Vol:	0	0	0	0	0	0	0	0	0	0	0	0
PCE Adj:	0.00	0.00	0.00	0.00	0.00	0.00	0.00	0.00	0.00	0.00	0.00	0.00
MLF Adj:	0.00	0.00	0.00	0.00	0.00	0.00	0.00	0.00	0.00	0.00	0.00	0.00
FinalVolume:	0	0	0	0	0	0	0	0	0	0	0	0
Saturation Flow Module:												
Sat/Lane:	0	0	0	0	0	0	0	0	0	0	0	0
Adjustment:	1.00	1.00	1.00	1.00	1.00	1.00	1.00	1.00	1.00	1.00	1.00	1.00
Lanes:	0.00	0.00	0.00	0.00	0.00	0.00	0.00	0.00	0.00	0.00	0.00	0.00
Final Sat.:	0	0	0	0	0	0	0	0	0	0	0	0
Capacity Analysis Module:												
Vol/Sat:	0.00	0.00	0.00	0.00	0.00	0.00	0.00	0.00	0.00	0.00	0.00	0.00
Crit Moves:												

Newport Banning Ranch
Year 2016 without Project - TPO Analysis
PM Peak Hour

Level Of Service Computation Report
ICU 1(Loss as Cycle Length %) Method (Future Volume Alternative)

Intersection #54 Bluff Rd/17th St

Cycle (sec):	100	Critical Vol./Cap.(X):	0.000
Loss Time (sec):	0 (Y+R=4.0 sec)	Average Delay (sec/veh):	xxxxxx
Optimal Cycle:	0	Level Of Service:	

Street Name:	Bluff Road					17th Street					
Approach:	North Bound			South Bound			East Bound			West Bound		
Movement:	L - T - R			L - T - R			L - T - R			L - T - R		
Control:	Permitted			Permitted			Permitted			Permitted		
Rights:	Include			Include			Include			Include		
Min. Green:	0	0	0	0	0	0	0	0	0	0	0	0
Lanes:	1 0 1	1 0		1 0 0	1 0		0 0 1!	0 0		1 0 1	0 1	
Volume Module:												
Base Vol:	0	0	0	0	0	0	0	0	0	0	0	0
Growth Adj:	0.00	0.00	0.00	0.00	0.00	0.00	0.00	0.00	0.00	0.00	0.00	0.00
Initial Bse:	0	0	0	0	0	0	0	0	0	0	0	0
Added Vol:	0	0	0	0	0	0	0	0	0	0	0	0
PasserByVol:	0	0	0	0	0	0	0	0	0	0	0	0
Initial Fut:	0	0	0	0	0	0	0	0	0	0	0	0
User Adj:	0.00	0.00	0.00	0.00	0.00	0.00	0.00	0.00	0.00	0.00	0.00	0.00
PHF Adj:	0.00	0.00	0.00	0.00	0.00	0.00	0.00	0.00	0.00	0.00	0.00	0.00
PHF Volume:	0	0	0	0	0	0	0	0	0	0	0	0
Reduct Vol:	0	0	0	0	0	0	0	0	0	0	0	0
Reduced Vol:	0	0	0	0	0	0	0	0	0	0	0	0
PCE Adj:	0.00	0.00	0.00	0.00	0.00	0.00	0.00	0.00	0.00	0.00	0.00	0.00
MLF Adj:	0.00	0.00	0.00	0.00	0.00	0.00	0.00	0.00	0.00	0.00	0.00	0.00
FinalVolume:	0	0	0	0	0	0	0	0	0	0	0	0
Saturation Flow Module:												
Sat/Lane:	0	0	0	0	0	0	0	0	0	0	0	0
Adjustment:	1.00	1.00	1.00	1.00	1.00	1.00	1.00	1.00	1.00	1.00	1.00	1.00
Lanes:	0.00	0.00	0.00	0.00	0.00	0.00	0.00	0.00	0.00	0.00	0.00	0.00
Final Sat.:	0	0	0	0	0	0	0	0	0	0	0	0
Capacity Analysis Module:												
Vol/Sat:	0.00	0.00	0.00	0.00	0.00	0.00	0.00	0.00	0.00	0.00	0.00	0.00
Crit Moves:												

Newport Banning Ranch
Year 2016 without Project - TPO Analysis
PM Peak Hour

Level Of Service Computation Report
2000 HCM Unsignalized Method (Future Volume Alternative)

Intersection #55 Bluff Rd/16th St

Average Delay (sec/veh): 0.0 Worst Case Level Of Service: [0.0]

Street Name:	Bluff Road						16th Street					
Approach:	North Bound			South Bound			East Bound			West Bound		
Movement:	L - T - R			L - T - R			L - T - R			L - T - R		
Control:	Uncontrolled			Uncontrolled			Stop Sign			Stop Sign		
Rights:	Include			Include			Include			Include		
Lanes:	1 0 1	1 0		1 0 1	1 0		0 0 1!	0 0		0 0 1!	0 0	
Volume Module:												
Base Vol:	0	0	0	0	0	0	0	0	0	0	0	0
Growth Adj:	0.00	0.00	0.00	0.00	0.00	0.00	0.00	0.00	0.00	0.00	0.00	0.00
Initial Bse:	0	0	0	0	0	0	0	0	0	0	0	0
Added Vol:	0	0	0	0	0	0	0	0	0	0	0	0
PasserByVol:	0	0	0	0	0	0	0	0	0	0	0	0
Initial Fut:	0	0	0	0	0	0	0	0	0	0	0	0
User Adj:	0.00	0.00	0.00	0.00	0.00	0.00	0.00	0.00	0.00	0.00	0.00	0.00
PHF Adj:	0.00	0.00	0.00	0.00	0.00	0.00	0.00	0.00	0.00	0.00	0.00	0.00
PHF Volume:	0	0	0	0	0	0	0	0	0	0	0	0
Reduct Vol:	0	0	0	0	0	0	0	0	0	0	0	0
FinalVolume:	0	0	0	0	0	0	0	0	0	0	0	0
Critical Gap Module:												
Critical Gp:	0.0	0.0	0.0	0.0	0.0	0.0	0.0	0.0	0.0	0.0	0.0	0.0
FollowUpTim:	0.0	0.0	0.0	0.0	0.0	0.0	0.0	0.0	0.0	0.0	0.0	0.0
Capacity Module:												
Cnflict Vol:	0	0	0	0	0	0	0	0	0	0	0	0
Potent Cap.:	0	0	0	0	0	0	0	0	0	0	0	0
Move Cap.:	1	1	1	1	1	1	1	1	1	1	1	1
Volume/Cap:	0.00	0.00	0.00	0.00	0.00	0.00	0.00	0.00	0.00	0.00	0.00	0.00
Level Of Service Module:												
2Way95thQ:	0.0	0.0	0.0	0.0	0.0	0.0	0.0	0.0	0.0	0.0	0.0	0.0
Control Del:	0.0	0.0	0.0	0.0	0.0	0.0	0.0	0.0	0.0	0.0	0.0	0.0
LOS by Move:												
Movement:	LT - LTR - RT			LT - LTR - RT			LT - LTR - RT			LT - LTR - RT		
Shared Cap.:	0	0	0	0	0	0	0	0	0	0	0	0
SharedQueue:	0.0	0.0	0.0	0.0	0.0	0.0	0.0	0.0	0.0	0.0	0.0	0.0
Shrd ConDel:	1.0	1.0	1.0	1.0	1.0	1.0	1.0	1.0	1.0	1.0	1.0	1.0
Shared LOS:												
ApproachDel:	0.0			0.0			0.0			0.0		
ApproachLOS:												

Note: Queue reported is the number of cars per lane.

Newport Banning Ranch
Year 2016 without Project - TPO Analysis
PM Peak Hour

Level Of Service Computation Report
ICU 1(Loss as Cycle Length %) Method (Future Volume Alternative)

Intersection #56 Bluff Rd/15th St

Cycle (sec):	100	Critical Vol./Cap.(X):	0.000
Loss Time (sec):	0 (Y+R=4.0 sec)	Average Delay (sec/veh):	xxxxxx
Optimal Cycle:	0	Level Of Service:	

Street Name:	Bluff Road						15th Street					
Approach:	North Bound			South Bound			East Bound			West Bound		
Movement:	L - T - R			L - T - R			L - T - R			L - T - R		
Control:	Split Phase			Split Phase			Permitted			Permitted		
Rights:	Include			Include			Include			Include		
Min. Green:	0	0	0	0	0	0	0	0	0	0	0	0
Lanes:	0 0 0 0 0			1 0 0 0 2			2 0 2 0 0			0 0 2 1 0		
Volume Module:												
Base Vol:	0	0	0	0	0	0	0	0	0	0	0	0
Growth Adj:	0.00	0.00	0.00	0.00	0.00	0.00	0.00	0.00	0.00	0.00	0.00	0.00
Initial Bse:	0	0	0	0	0	0	0	0	0	0	0	0
Added Vol:	0	0	0	0	0	0	0	0	0	0	0	0
PasserByVol:	0	0	0	0	0	0	0	0	0	0	0	0
Initial Fut:	0	0	0	0	0	0	0	0	0	0	0	0
User Adj:	0.00	0.00	0.00	0.00	0.00	0.00	0.00	0.00	0.00	0.00	0.00	0.00
PHF Adj:	0.00	0.00	0.00	0.00	0.00	0.00	0.00	0.00	0.00	0.00	0.00	0.00
PHF Volume:	0	0	0	0	0	0	0	0	0	0	0	0
Reduct Vol:	0	0	0	0	0	0	0	0	0	0	0	0
Reduced Vol:	0	0	0	0	0	0	0	0	0	0	0	0
PCE Adj:	0.00	0.00	0.00	0.00	0.00	0.00	0.00	0.00	0.00	0.00	0.00	0.00
MLF Adj:	0.00	0.00	0.00	0.00	0.00	0.00	0.00	0.00	0.00	0.00	0.00	0.00
FinalVolume:	0	0	0	0	0	0	0	0	0	0	0	0
Saturation Flow Module:												
Sat/Lane:	0	0	0	0	0	0	0	0	0	0	0	0
Adjustment:	1.00	1.00	1.00	1.00	1.00	1.00	1.00	1.00	1.00	1.00	1.00	1.00
Lanes:	0.00	0.00	0.00	0.00	0.00	0.00	0.00	0.00	0.00	0.00	0.00	0.00
Final Sat.:	0	0	0	0	0	0	0	0	0	0	0	0
Capacity Analysis Module:												
Vol/Sat:	0.00	0.00	0.00	0.00	0.00	0.00	0.00	0.00	0.00	0.00	0.00	0.00
Crit Moves:												

Newport Banning Ranch
Year 2016 without Project - TPO Analysis
PM Peak Hour

Level Of Service Computation Report
ICU 1(Loss as Cycle Length %) Method (Future Volume Alternative)

Intersection #57 Bluff Rd/W. Coast Hwy

Cycle (sec):	120	Critical Vol./Cap.(X):	0.629
Loss Time (sec):	0 (Y+R=4.0 sec)	Average Delay (sec/veh):	xxxxxx
Optimal Cycle:	62	Level Of Service:	B

Street Name:	Bluff Road					W. Coast Highway					
Approach:	North Bound			South Bound			East Bound			West Bound		
Movement:	L - T - R			L - T - R			L - T - R			L - T - R		
Control:	Split Phase			Split Phase			Protected			Protected		
Rights:	Include			Include			Include			Include		
Min. Green:	0	0	0	0	0	0	0	0	0	0	0	0
Lanes:	0 0 0 0 0			2 0 0 0 2			2 0 3 0 0			0 0 3 0 1		
Volume Module:												
Base Vol:	0	0	0	0	0	0	0	1487	0	0	2818	0
Growth Adj:	1.00	1.00	1.00	1.00	1.00	1.00	1.00	1.07	1.00	1.00	1.07	1.00
Initial Bse:	0	0	0	0	0	0	0	1594	0	0	3021	0
Added Vol:	0	0	0	0	0	0	0	0	0	0	0	0
PasserByVol:	0	0	0	0	0	0	0	0	0	0	0	0
Initial Fut:	0	0	0	0	0	0	0	1594	0	0	3021	0
User Adj:	1.00	1.00	1.00	1.00	1.00	1.00	1.00	1.00	1.00	1.00	1.00	1.00
PHF Adj:	1.00	1.00	1.00	1.00	1.00	1.00	1.00	1.00	1.00	1.00	1.00	1.00
PHF Volume:	0	0	0	0	0	0	0	1594	0	0	3021	0
Reduct Vol:	0	0	0	0	0	0	0	0	0	0	0	0
Reduced Vol:	0	0	0	0	0	0	0	1594	0	0	3021	0
PCE Adj:	1.00	1.00	1.00	1.00	1.00	1.00	1.00	1.00	1.00	1.00	1.00	1.00
MLF Adj:	1.00	1.00	1.00	1.00	1.00	1.00	1.00	1.00	1.00	1.00	1.00	1.00
FinalVolume:	0	0	0	0	0	0	0	1594	0	0	3021	0
Saturation Flow Module:												
Sat/Lane:	1600	1600	1600	1600	1600	1600	1600	1600	1600	1600	1600	1600
Adjustment:	1.00	1.00	1.00	1.00	1.00	1.00	1.00	1.00	1.00	1.00	1.00	1.00
Lanes:	0.00	0.00	0.00	2.00	0.00	2.00	2.00	3.00	0.00	0.00	3.00	1.00
Final Sat.:	0	0	0	3200	0	3200	3200	4800	0	0	4800	1600
Capacity Analysis Module:												
Vol/Sat:	0.00	0.00	0.00	0.00	0.00	0.00	0.00	0.33	0.00	0.00	0.63	0.00
Crit Moves:							****				****	

Newport Banning Ranch
Year 2016 without Project - TPO Analysis
PM Peak Hour

Level Of Service Computation Report
2000 HCM 4-Way Stop Method (Future Volume Alternative)

Intersection #58 Monrovia Ave/15th Street

Cycle (sec):	100	Critical Vol./Cap.(X):	0.117
Loss Time (sec):	0 (Y+R=4.0 sec)	Average Delay (sec/veh):	7.4
Optimal Cycle:	0	Level Of Service:	A

Street Name:	Monrovia Ave						15th Street					
Approach:	North Bound			South Bound			East Bound			West Bound		
Movement:	L - T - R			L - T - R			L - T - R			L - T - R		
Control:	Stop Sign			Stop Sign			Stop Sign			Stop Sign		
Rights:	Include			Include			Include			Include		
Min. Green:	0	0	0	0	0	0	0	0	0	0	0	0
Lanes:	0 0 0 1 0			0 0 1! 0 0			0 1 0 0 0			0 0 1! 0 0		
Volume Module: >> Count Date: 4 May 2011 << Existing PM Peak Hour												
Base Vol:	0	5	17	92	5	1	9	7	0	11	2	42
Growth Adj:	1.00	1.00	1.00	1.00	1.00	1.00	1.00	1.00	1.00	1.00	1.00	1.00
Initial Bse:	0	5	17	92	5	1	9	7	0	11	2	42
Added Vol:	0	0	0	0	0	0	0	0	0	0	0	0
PasserByVol:	0	0	0	0	0	0	0	0	0	0	0	0
Initial Fut:	0	5	17	92	5	1	9	7	0	11	2	42
User Adj:	1.00	1.00	1.00	1.00	1.00	1.00	1.00	1.00	1.00	1.00	1.00	1.00
PHF Adj:	1.00	1.00	1.00	1.00	1.00	1.00	1.00	1.00	1.00	1.00	1.00	1.00
PHF Volume:	0	5	17	92	5	1	9	7	0	11	2	42
Reduct Vol:	0	0	0	0	0	0	0	0	0	0	0	0
Reduced Vol:	0	5	17	92	5	1	9	7	0	11	2	42
PCE Adj:	1.00	1.00	1.00	1.00	1.00	1.00	1.00	1.00	1.00	1.00	1.00	1.00
MLF Adj:	1.00	1.00	1.00	1.00	1.00	1.00	1.00	1.00	1.00	1.00	1.00	1.00
FinalVolume:	0	5	17	92	5	1	9	7	0	11	2	42
Saturation Flow Module:												
Adjustment:	1.00	1.00	1.00	1.00	1.00	1.00	1.00	1.00	1.00	1.00	1.00	1.00
Lanes:	0.00	0.23	0.77	0.94	0.05	0.01	0.56	0.44	0.00	0.20	0.04	0.76
Final Sat.:	0	218	740	786	43	9	456	355	0	186	34	711
Capacity Analysis Module:												
Vol/Sat:	xxxx	0.02	0.02	0.12	0.12	0.12	0.02	0.02	xxxx	0.06	0.06	0.06
Crit Moves:			****		****			****		****		
Delay/Veh:	0.0	6.8	6.8	7.8	7.8	7.8	7.4	7.4	0.0	7.0	7.0	7.0
Delay Adj:	1.00	1.00	1.00	1.00	1.00	1.00	1.00	1.00	1.00	1.00	1.00	1.00
AdjDel/Veh:	0.0	6.8	6.8	7.8	7.8	7.8	7.4	7.4	0.0	7.0	7.0	7.0
LOS by Move:	*	A	A	A	A	A	A	A	*	A	A	A
ApproachDel:		6.8			7.8			7.4			7.0	
Delay Adj:		1.00			1.00			1.00			1.00	
ApprAdjDel:		6.8			7.8			7.4			7.0	
LOS by Appr:		A			A			A			A	
AllWayAvgQ:	0.0	0.0	0.0	0.1	0.1	0.1	0.0	0.0	0.0	0.1	0.1	0.1

Newport Banning Ranch
Year 2016 without Project - TPO Analysis
PM Peak Hour

Note: Queue reported is the number of cars per lane.

Newport Banning Ranch
Year 2016 without Project - TPO Analysis
PM Peak Hour

Level Of Service Computation Report
ICU 1(Loss as Cycle Length %) Method (Future Volume Alternative)

Intersection #100 Pomona Ave/16th St

Cycle (sec):	100	Critical Vol./Cap.(X):	0.048
Loss Time (sec):	0 (Y+R=4.0 sec)	Average Delay (sec/veh):	xxxxxx
Optimal Cycle:	15	Level Of Service:	A

Street Name:	Pomona Avenue						16th Street					
Approach:	North Bound			South Bound			East Bound			West Bound		
Movement:	L - T - R			L - T - R			L - T - R			L - T - R		
Control:	Permitted			Permitted			Permitted			Permitted		
Rights:	Include			Include			Include			Include		
Min. Green:	0	0	0	0	0	0	0	0	0	0	0	0
Lanes:	0 0 0 0 0			1 0 0 1 0			1 0 0 1 0			0 0 0 1 0		
Volume Module:												
Base Vol:	0	0	0	34	56	15	0	-200	0	0	-200	0
Growth Adj:	1.07	1.07	1.07	1.07	1.07	1.07	1.07	1.07	1.07	1.07	1.07	1.07
Initial Bse:	0	0	0	36	60	16	0	-214	0	0	-214	0
Added Vol:	0	0	0	0	0	0	0	0	0	0	0	0
PasserByVol:	0	0	0	0	0	0	0	0	0	0	0	0
Initial Fut:	0	0	0	36	60	16	0	-214	0	0	-214	0
User Adj:	1.00	1.00	1.00	1.00	1.00	1.00	1.00	0.00	1.00	1.00	0.00	1.00
PHF Adj:	1.00	1.00	1.00	1.00	1.00	1.00	1.00	0.00	1.00	1.00	0.00	1.00
PHF Volume:	0	0	0	36	60	16	0	0	0	0	0	0
Reduct Vol:	0	0	0	0	0	0	0	0	0	0	0	0
Reduced Vol:	0	0	0	36	60	16	0	0	0	0	0	0
PCE Adj:	1.00	1.00	1.00	1.00	1.00	1.00	1.00	0.00	1.00	1.00	0.00	1.00
MLF Adj:	1.00	1.00	1.00	1.00	1.00	1.00	1.00	0.00	1.00	1.00	0.00	1.00
FinalVolume:	0	0	0	36	60	16	0	0	0	0	0	0
Saturation Flow Module:												
Sat/Lane:	1600	1600	1600	1600	1600	1600	1600	1600	1600	1600	1600	1600
Adjustment:	1.00	1.00	1.00	1.00	1.00	1.00	1.00	1.00	1.00	1.00	1.00	1.00
Lanes:	0.00	0.00	0.00	1.00	0.79	0.21	1.00	1.00	0.00	0.00	1.00	0.00
Final Sat.:	0	0	0	1600	1262	338	1600	1600	0	0	1600	0
Capacity Analysis Module:												
Vol/Sat:	0.00	0.00	0.00	0.02	0.05	0.05	0.00	0.00	0.00	0.00	0.00	0.00
Crit Moves:					****							

Newport Banning Ranch
Year 2016 with Project - TPO Analysis
AM Peak Hour

Scenario Report

Scenario:	TPO 2016 w/ Project AM ICU
Command:	TPO 2016 w/ Project AM ICU
Volume:	Existing+Commited AM
Geometry:	2016 Planned ICU
Impact Fee:	Default Impact Fee
Trip Generation:	Proposed Project AM
Trip Distribution:	Project
Paths:	Bluff to 19th
Routes:	Default Route
Configuration:	2016 ICU

Newport Banning Ranch
Year 2016 with Project - TPO Analysis
AM Peak Hour

Level Of Service Computation Report
2000 HCM 4-Way Stop Method (Future Volume Alternative)

Intersection #1 Monrovia Ave/16th St

Cycle (sec):	100	Critical Vol./Cap.(X):	0.362
Loss Time (sec):	0 (Y+R=4.0 sec)	Average Delay (sec/veh):	10.5
Optimal Cycle:	0	Level Of Service:	B

Street Name:	Monrovia Avenue						16th Street					
Approach:	North Bound			South Bound			East Bound			West Bound		
Movement:	L -	T -	R	L -	T -	R	L -	T -	R	L -	T -	R
Control:	Stop Sign			Stop Sign			Stop Sign			Stop Sign		
Rights:	Include			Include			Include			Include		
Min. Green:	0	0	0	0	0	0	0	0	0	0	0	0
Lanes:	0 0	1! 0	0	0 0	1! 0	0	0 0	1! 0	0	0 0	1! 0	0
Volume Module:												
Base Vol:	4	92	54	35	104	19	9	20	10	112	44	44
Growth Adj:	1.00	1.00	1.00	1.00	1.00	1.00	1.00	1.00	1.00	1.00	1.00	1.00
Initial Bse:	4	92	54	35	104	19	9	20	10	112	44	44
Added Vol:	0	42	0	-8	15	15	42	155	0	0	48	-21
Committed P:	0	0	0	0	0	0	0	0	0	0	0	0
Initial Fut:	4	134	54	27	119	34	51	175	10	112	92	23
User Adj:	1.00	1.00	1.00	1.00	1.00	1.00	1.00	1.00	1.00	1.00	1.00	1.00
PHF Adj:	1.00	1.00	1.00	1.00	1.00	1.00	1.00	1.00	1.00	1.00	1.00	1.00
PHF Volume:	4	134	54	27	119	34	51	175	10	112	92	23
Reduct Vol:	0	0	0	0	0	0	0	0	0	0	0	0
Reduced Vol:	4	134	54	27	119	34	51	175	10	112	92	23
PCE Adj:	1.00	1.00	1.00	1.00	1.00	1.00	1.00	1.00	1.00	1.00	1.00	1.00
MLF Adj:	1.00	1.00	1.00	1.00	1.00	1.00	1.00	1.00	1.00	1.00	1.00	1.00
FinalVolume:	4	134	54	27	119	34	51	175	10	112	92	23
Saturation Flow Module:												
Adjustment:	1.00	1.00	1.00	1.00	1.00	1.00	1.00	1.00	1.00	1.00	1.00	1.00
Lanes:	0.02	0.70	0.28	0.15	0.66	0.19	0.22	0.74	0.04	0.49	0.41	0.10
Final Sat.:	13	448	181	94	416	119	141	483	28	319	262	66
Capacity Analysis Module:												
Vol/Sat:	0.30	0.30	0.30	0.29	0.29	0.29	0.36	0.36	0.36	0.35	0.35	0.35
Crit Moves:	****				****			****				****
Delay/Veh:	10.1	10.1	10.1	10.2	10.2	10.2	10.9	10.9	10.9	10.8	10.8	10.8
Delay Adj:	1.00	1.00	1.00	1.00	1.00	1.00	1.00	1.00	1.00	1.00	1.00	1.00
AdjDel/Veh:	10.1	10.1	10.1	10.2	10.2	10.2	10.9	10.9	10.9	10.8	10.8	10.8
LOS by Move:	B	B	B	B	B	B	B	B	B	B	B	B
ApproachDel:	10.1			10.2			10.9			10.8		
Delay Adj:	1.00			1.00			1.00			1.00		
ApprAdjDel:	10.1			10.2			10.9			10.8		
LOS by Appr:	B			B			B			B		
AllWayAvgQ:	0.4	0.4	0.4	0.3	0.3	0.3	0.5	0.5	0.5	0.5	0.5	0.5

Newport Banning Ranch
Year 2016 with Project - TPO Analysis
AM Peak Hour

Note: Queue reported is the number of cars per lane.

Newport Banning Ranch
Year 2016 with Project - TPO Analysis
AM Peak Hour

Level Of Service Computation Report
ICU 1(Loss as Cycle Length %) Method (Future Volume Alternative)

Intersection #2 Placentia Ave/15th St

Cycle (sec):	100	Critical Vol./Cap.(X):	0.585
Loss Time (sec):	0 (Y+R=4.0 sec)	Average Delay (sec/veh):	xxxxxx
Optimal Cycle:	55	Level Of Service:	A

Street Name:	Placentia Ave						15th Street					
Approach:	North Bound			South Bound			East Bound			West Bound		
Movement:	L - T - R			L - T - R			L - T - R			L - T - R		
Control:	Prot+Permit			Prot+Permit			Split Phase			Split Phase		
Rights:	Include			Include			Include			Include		
Min. Green:	0	0	0	0	0	0	0	0	0	0	0	0
Lanes:	1 0 1	1 0		1 0 1	1 0		0 0 1!	0 0		0 1 0	0 1	
Volume Module:												
Base Vol:	131	425	15	25	431	19	57	51	174	4	22	75
Growth Adj:	1.00	1.00	1.00	1.00	1.00	1.00	1.00	1.00	1.00	1.00	1.00	1.00
Initial Bse:	131	425	15	25	431	19	57	51	174	4	22	75
Added Vol:	29	-189	0	0	-68	8	22	0	200	0	25	0
Committed P:	0	24	0	0	5	0	0	0	0	0	0	0
Initial Fut:	160	260	15	25	368	27	79	51	374	4	47	75
User Adj:	1.00	1.00	1.00	1.00	1.00	1.00	1.00	1.00	1.00	1.00	1.00	1.00
PHF Adj:	1.00	1.00	1.00	1.00	1.00	1.00	1.00	1.00	1.00	1.00	1.00	1.00
PHF Volume:	160	260	15	25	368	27	79	51	374	4	47	75
Reduct Vol:	0	0	0	0	0	0	0	0	0	0	0	0
Reduced Vol:	160	260	15	25	368	27	79	51	374	4	47	75
PCE Adj:	1.00	1.00	1.00	1.00	1.00	1.00	1.00	1.00	1.00	1.00	1.00	1.00
MLF Adj:	1.00	1.00	1.00	1.00	1.00	1.00	1.00	1.00	1.00	1.00	1.00	1.00
FinalVolume:	160	260	15	25	368	27	79	51	374	4	47	75
Saturation Flow Module:												
Sat/Lane:	1600	1600	1600	1600	1600	1600	1600	1600	1600	1600	1600	1600
Adjustment:	1.00	1.00	1.00	1.00	1.00	1.00	1.00	1.00	1.00	1.00	1.00	1.00
Lanes:	1.00	1.89	0.11	1.00	1.86	0.14	0.16	0.10	0.74	0.08	0.92	1.00
Final Sat.:	1600	3025	175	1600	2981	219	251	162	1187	125	1475	1600
Capacity Analysis Module:												
Vol/Sat:	0.10	0.09	0.09	0.02	0.12	0.12	0.32	0.32	0.31	0.03	0.03	0.05
Crit Moves:	****				****			****				****

Newport Banning Ranch
Year 2016 with Project - TPO Analysis
AM Peak Hour

Level Of Service Computation Report
2000 HCM Unsignalized Method (Future Volume Alternative)

Intersection #3 Superior Ave/15th St

Average Delay (sec/veh): 1.7 Worst Case Level Of Service: C[22.3]

Street Name:	Superior Avenue						15th Street					
Approach:	North Bound			South Bound			East Bound			West Bound		
Movement:	L - T - R			L - T - R			L - T - R			L - T - R		
Control:	Uncontrolled			Uncontrolled			Stop Sign			Stop Sign		
Rights:	Include			Include			Include			Include		
Lanes:	1 0 2 0 0			0 0 1 1 0			1 0 0 0 1			0 0 0 0 0		
Volume Module:												
Base Vol:	77	799	0	0	328	59	64	0	21	0	0	0
Growth Adj:	1.00	1.00	1.00	1.00	1.00	1.00	1.00	1.00	1.00	1.00	1.00	1.00
Initial Bse:	77	799	0	0	328	59	64	0	21	0	0	0
Added Vol:	0	68	0	0	0	25	0	0	0	0	0	0
Committed P:	0	30	0	0	27	0	0	0	0	0	0	0
Initial Fut:	77	897	0	0	355	84	64	0	21	0	0	0
User Adj:	1.00	1.00	1.00	1.00	1.00	1.00	1.00	1.00	1.00	1.00	1.00	1.00
PHF Adj:	1.00	1.00	1.00	1.00	1.00	1.00	1.00	1.00	1.00	1.00	1.00	1.00
PHF Volume:	77	897	0	0	355	84	64	0	21	0	0	0
Reduct Vol:	0	0	0	0	0	0	0	0	0	0	0	0
FinalVolume:	77	897	0	0	355	84	64	0	21	0	0	0
Critical Gap Module:												
Critical Gp:	4.1	xxxx	xxxxx	xxxxx	xxxx	xxxxx	6.8	xxxx	6.9	xxxxx	xxxx	xxxxx
FollowUpTim:	2.2	xxxx	xxxxx	xxxxx	xxxx	xxxxx	3.5	xxxx	3.3	xxxxx	xxxx	xxxxx
Capacity Module:												
Cnflict Vol:	439	xxxx	xxxxx	xxxx	xxxx	xxxxx	1000	xxxx	220	xxxx	xxxx	xxxxx
Potent Cap.:	1132	xxxx	xxxxx	xxxx	xxxx	xxxxx	243	xxxx	791	xxxx	xxxx	xxxxx
Move Cap.:	1132	xxxx	xxxxx	xxxx	xxxx	xxxxx	231	xxxx	791	xxxx	xxxx	xxxxx
Volume/Cap:	0.07	xxxx	xxxx	xxxx	xxxx	xxxx	0.28	xxxx	0.03	xxxx	xxxx	xxxx
Level Of Service Module:												
2Way95thQ:	0.2	xxxx	xxxxx	xxxx	xxxx	xxxxx	1.1	xxxx	0.1	xxxx	xxxx	xxxxx
Control Del:	8.4	xxxx	xxxxx	xxxxx	xxxx	xxxxx	26.5	xxxx	9.7	xxxxx	xxxx	xxxxx
LOS by Move:	A	*	*	*	*	*	D	*	A	*	*	*
Movement:	LT - LTR - RT			LT - LTR - RT			LT - LTR - RT			LT - LTR - RT		
Shared Cap.:	xxxx	xxxx	xxxxx	xxxx	xxxx	xxxxx	xxxx	xxxx	xxxxx	xxxx	xxxx	xxxxx
SharedQueue:	xxxxx	xxxx	xxxxx	xxxxx	xxxx	xxxxx	xxxxx	xxxx	xxxxx	xxxxx	xxxx	xxxxx
Shrd ConDel:	xxxxx	xxxx	xxxxx	xxxxx	xxxx	xxxxx	xxxxx	xxxx	xxxxx	xxxxx	xxxx	xxxxx
Shared LOS:	*	*	*	*	*	*	*	*	*	*	*	*
ApproachDel:	xxxxxx			xxxxxx			22.3			xxxxxx		
ApproachLOS:	*			*			C			*		

Note: Queue reported is the number of cars per lane.

Newport Banning Ranch
Year 2016 with Project - TPO Analysis
AM Peak Hour

Level Of Service Computation Report
ICU 1(Loss as Cycle Length %) Method (Future Volume Alternative)

Intersection #4 Superior Ave/Placentia Ave

Cycle (sec):	100	Critical Vol./Cap.(X):	0.513
Loss Time (sec):	0 (Y+R=4.0 sec)	Average Delay (sec/veh):	xxxxxx
Optimal Cycle:	38	Level Of Service:	A

Street Name:	Superior Avenue						Placentia Avenue					
Approach:	North Bound			South Bound			East Bound			West Bound		
Movement:	L - T - R			L - T - R			L - T - R			L - T - R		
Control:	Protected			Protected			Permitted			Permitted		
Rights:	Include			Include			Include			Include		
Min. Green:	0	0	0	0	0	0	0	0	0	0	0	0
Lanes:	1 0 1	1 0		1 0 1	1 0		1 0 1	0 1		0 1 0	1 0	
Volume Module:												
Base Vol:	346	803	33	57	243	9	18	325	268	8	227	61
Growth Adj:	1.00	1.00	1.00	1.00	1.00	1.00	1.00	1.00	1.00	1.00	1.00	1.00
Initial Bse:	346	803	33	57	243	9	18	325	268	8	227	61
Added Vol:	-210	-140	0	0	-50	50	208	0	-75	0	0	0
Committed P:	0	30	0	12	15	0	0	5	0	4	24	0
Initial Fut:	136	693	33	69	208	59	226	330	193	12	251	61
User Adj:	1.00	1.00	1.00	1.00	1.00	1.00	1.00	1.00	1.00	1.00	1.00	1.00
PHF Adj:	1.00	1.00	1.00	1.00	1.00	1.00	1.00	1.00	1.00	1.00	1.00	1.00
PHF Volume:	136	693	33	69	208	59	226	330	193	12	251	61
Reduct Vol:	0	0	0	0	0	0	0	0	0	0	0	0
Reduced Vol:	136	693	33	69	208	59	226	330	193	12	251	61
PCE Adj:	1.00	1.00	1.00	1.00	1.00	1.00	1.00	1.00	1.00	1.00	1.00	1.00
MLF Adj:	1.00	1.00	1.00	1.00	1.00	1.00	1.00	1.00	1.00	1.00	1.00	1.00
FinalVolume:	136	693	33	69	208	59	226	330	193	12	251	61
Saturation Flow Module:												
Sat/Lane:	1600	1600	1600	1600	1600	1600	1600	1600	1600	1600	1600	1600
Adjustment:	1.00	1.00	1.00	1.00	1.00	1.00	1.00	1.00	1.00	1.00	1.00	1.00
Lanes:	1.00	1.91	0.09	1.00	1.56	0.44	1.00	1.00	1.00	0.07	1.55	0.38
Final Sat.:	1600	3055	145	1600	2493	707	1600	1600	1600	119	2479	602
Capacity Analysis Module:												
Vol/Sat:	0.09	0.23	0.23	0.04	0.08	0.08	0.14	0.21	0.12	0.01	0.10	0.10
Crit Moves:		****		****			****				****	

Newport Banning Ranch
Year 2016 with Project - TPO Analysis
AM Peak Hour

Level Of Service Computation Report
ICU 1(Loss as Cycle Length %) Method (Future Volume Alternative)

Intersection #5 Hospital Rd/Newport Blvd

Cycle (sec):	120	Critical Vol./Cap.(X):	0.525
Loss Time (sec):	0 (Y+R=4.0 sec)	Average Delay (sec/veh):	xxxxxx
Optimal Cycle:	48	Level Of Service:	A

Street Name:	Newport Boulevard						Hospital Road					
Approach:	North Bound			South Bound			East Bound			West Bound		
Movement:	L - T - R			L - T - R			L - T - R			L - T - R		
Control:	Protected			Protected			Protected			Protected		
Rights:	Include			Include			Include			Include		
Min. Green:	0	0	0	0	0	0	0	0	0	0	0	0
Lanes:	1 0 3 0 1			1 0 3 0 1			2 0 1 0 1			1 0 1 1 0		
Volume Module:												
Base Vol:	129	1373	96	56	1066	368	197	124	199	65	224	28
Growth Adj:	1.07	1.07	1.07	1.07	1.07	1.07	1.00	1.00	1.00	1.00	1.00	1.00
Initial Bse:	138	1472	103	60	1143	394	197	124	199	65	224	28
Added Vol:	0	0	0	0	0	0	0	0	0	0	0	0
Committed P:	23	49	0	0	64	10	12	0	9	0	1	0
Initial Fut:	161	1521	103	60	1207	404	209	124	208	65	225	28
User Adj:	1.00	1.00	1.00	1.00	1.00	1.00	1.00	1.00	1.00	1.00	1.00	1.00
PHF Adj:	1.00	1.00	1.00	1.00	1.00	1.00	1.00	1.00	1.00	1.00	1.00	1.00
PHF Volume:	161	1521	103	60	1207	404	209	124	208	65	225	28
Reduct Vol:	0	0	0	0	0	0	0	0	0	0	0	0
Reduced Vol:	161	1521	103	60	1207	404	209	124	208	65	225	28
PCE Adj:	1.00	1.00	1.00	1.00	1.00	1.00	1.00	1.00	1.00	1.00	1.00	1.00
MLF Adj:	1.00	1.00	1.00	1.00	1.00	1.00	1.00	1.00	1.00	1.00	1.00	1.00
FinalVolume:	161	1521	103	60	1207	404	209	124	208	65	225	28
Saturation Flow Module:												
Sat/Lane:	1600	1600	1600	1600	1600	1600	1600	1600	1600	1600	1600	1600
Adjustment:	1.00	1.00	1.00	1.00	1.00	1.00	1.00	1.00	1.00	1.00	1.00	1.00
Lanes:	1.00	3.00	1.00	1.00	3.00	1.00	2.00	1.00	1.00	1.00	1.78	0.22
Final Sat.:	1600	4800	1600	1600	4800	1600	3200	1600	1600	1600	2846	354
Capacity Analysis Module:												
Vol/Sat:	0.10	0.32	0.06	0.04	0.25	0.25	0.07	0.08	0.13	0.04	0.08	0.08
Crit Moves:		****		****					****	****		

Newport Banning Ranch
Year 2016 with Project - TPO Analysis
AM Peak Hour

Level Of Service Computation Report
ICU 1(Loss as Cycle Length %) Method (Future Volume Alternative)

Intersection #6 Orange St/W. Coast Hwy

Cycle (sec):	120	Critical Vol./Cap.(X):	0.804
Loss Time (sec):	0 (Y+R=4.0 sec)	Average Delay (sec/veh):	xxxxxx
Optimal Cycle:	95	Level Of Service:	D

Street Name:	Orange Street						W. Coast Highway					
Approach:	North Bound			South Bound			East Bound			West Bound		
Movement:	L - T - R			L - T - R			L - T - R			L - T - R		
Control:	Permitted			Permitted			Protected			Protected		
Rights:	Include			Include			Include			Include		
Min. Green:	0	0	0	0	0	0	0	0	0	0	0	0
Lanes:	0 1	0 0	1	0 1	0 0	1	1 0	2 1	0	1 0	3 0	1
Volume Module:												
Base Vol:	49	1	70	40	2	19	11	3095	10	43	870	17
Growth Adj:	1.00	1.00	1.00	1.00	1.00	1.00	1.07	1.07	1.07	1.07	1.07	1.07
Initial Bse:	49	1	70	40	2	19	12	3318	11	46	933	18
Added Vol:	0	0	0	0	0	0	0	56	0	0	152	0
Committed P:	0	0	0	0	0	0	0	62	0	0	37	0
Initial Fut:	49	1	70	40	2	19	12	3436	11	46	1122	18
User Adj:	1.00	1.00	1.00	1.00	1.00	1.00	1.00	1.00	1.00	1.00	1.00	1.00
PHF Adj:	1.00	1.00	1.00	1.00	1.00	1.00	1.00	1.00	1.00	1.00	1.00	1.00
PHF Volume:	49	1	70	40	2	19	12	3436	11	46	1122	18
Reduct Vol:	0	0	0	0	0	0	0	0	0	0	0	0
Reduced Vol:	49	1	70	40	2	19	12	3436	11	46	1122	18
PCE Adj:	1.00	1.00	1.00	1.00	1.00	1.00	1.00	1.00	1.00	1.00	1.00	1.00
MLF Adj:	1.00	1.00	1.00	1.00	1.00	1.00	1.00	1.00	1.00	1.00	1.00	1.00
FinalVolume:	49	1	70	40	2	19	12	3436	11	46	1122	18
Saturation Flow Module:												
Sat/Lane:	1600	1600	1600	1600	1600	1600	1600	1600	1600	1600	1600	1600
Adjustment:	1.00	1.00	1.00	1.00	1.00	1.00	1.00	1.00	1.00	1.00	1.00	1.00
Lanes:	0.98	0.02	1.00	0.95	0.05	1.00	1.00	2.99	0.01	1.00	3.00	1.00
Final Sat.:	1568	32	1600	1524	76	1600	1600	4785	15	1600	4800	1600
Capacity Analysis Module:												
Vol/Sat:	0.03	0.03	0.04	0.03	0.03	0.01	0.01	0.72	0.72	0.03	0.23	0.01
Crit Moves:	****				****			****		****		

Newport Banning Ranch
Year 2016 with Project - TPO Analysis
AM Peak Hour

Level Of Service Computation Report
ICU 1(Loss as Cycle Length %) Method (Future Volume Alternative)

Intersection #7 Prospect St/W. Coast Hwy

Cycle (sec):	120	Critical Vol./Cap.(X):	0.787
Loss Time (sec):	0 (Y+R=4.0 sec)	Average Delay (sec/veh):	xxxxxx
Optimal Cycle:	87	Level Of Service:	C

Street Name:	Prospect Street						W. Coast Highway					
Approach:	North Bound			South Bound			East Bound			West Bound		
Movement:	L - T - R			L - T - R			L - T - R			L - T - R		
Control:	Permitted			Permitted			Protected			Protected		
Rights:	Include			Include			Include			Include		
Min. Green:	0	0	0	0	0	0	0	0	0	0	0	0
Lanes:	0 1	0 0	1	0 0	1!	0 0	1 0	2 1	0	1 0	2 1	0
Volume Module:												
Base Vol:	19	0	33	267	0	7	17	2490	5	26	1112	34
Growth Adj:	1.00	1.00	1.00	1.00	1.00	1.00	1.07	1.07	1.07	1.07	1.07	1.07
Initial Bse:	19	0	33	267	0	7	18	2669	5	28	1192	36
Added Vol:	0	0	0	0	0	0	0	56	0	0	152	0
Committed P:	0	0	0	0	0	0	0	62	0	0	37	0
Initial Fut:	19	0	33	267	0	7	18	2787	5	28	1381	36
User Adj:	1.00	1.00	1.00	1.00	1.00	1.00	1.00	1.00	1.00	1.00	1.00	1.00
PHF Adj:	1.00	1.00	1.00	1.00	1.00	1.00	1.00	1.00	1.00	1.00	1.00	1.00
PHF Volume:	19	0	33	267	0	7	18	2787	5	28	1381	36
Reduct Vol:	0	0	0	0	0	0	0	0	0	0	0	0
Reduced Vol:	19	0	33	267	0	7	18	2787	5	28	1381	36
PCE Adj:	1.00	1.00	1.00	1.00	1.00	1.00	1.00	1.00	1.00	1.00	1.00	1.00
MLF Adj:	1.00	1.00	1.00	1.00	1.00	1.00	1.00	1.00	1.00	1.00	1.00	1.00
FinalVolume:	19	0	33	267	0	7	18	2787	5	28	1381	36
Saturation Flow Module:												
Sat/Lane:	1600	1600	1600	1600	1600	1600	1600	1600	1600	1600	1600	1600
Adjustment:	1.00	1.00	1.00	1.00	1.00	1.00	1.00	1.00	1.00	1.00	1.00	1.00
Lanes:	1.00	0.00	1.00	0.97	0.00	0.03	1.00	2.99	0.01	1.00	2.92	0.08
Final Sat.:	1600	0	1600	1559	0	41	1600	4791	9	1600	4677	123
Capacity Analysis Module:												
Vol/Sat:	0.01	0.00	0.02	0.17	0.00	0.17	0.01	0.58	0.58	0.02	0.30	0.30
Crit Moves:			****	****				****		****		

Newport Banning Ranch
Year 2016 with Project - TPO Analysis
AM Peak Hour

Level Of Service Computation Report
ICU 1(Loss as Cycle Length %) Method (Future Volume Alternative)

Intersection #8 W. Coast Hwy/Superior Ave

Cycle (sec):	120	Critical Vol./Cap.(X):	0.709
Loss Time (sec):	0 (Y+R=4.0 sec)	Average Delay (sec/veh):	xxxxxx
Optimal Cycle:	78	Level Of Service:	C

Street Name:	Superior Avenue						W. Coast Highway					
Approach:	North Bound			South Bound			East Bound			West Bound		
Movement:	L - T - R			L - T - R			L - T - R			L - T - R		
Control:	Split Phase			Split Phase			Protected			Protected		
Rights:	Include			Ovl			Include			Include		
Min. Green:	0	0	0	0	0	0	0	0	0	0	0	0
Lanes:	1 1 0	1 0		1 1 1	0 2		2 0	3 0	1	1 0	3 1	0
Volume Module:												
Base Vol:	168	266	114	170	165	247	709	1914	211	95	768	155
Growth Adj:	1.00	1.00	1.00	1.00	1.00	1.00	1.07	1.07	1.07	1.07	1.07	1.07
Initial Bse:	168	266	114	170	165	247	760	2052	226	102	823	166
Added Vol:	15	0	0	0	0	-125	-350	75	39	0	30	0
Committed P:	1	6	0	0	3	12	24	49	0	0	42	0
Initial Fut:	184	272	114	170	168	134	434	2176	265	102	895	166
User Adj:	1.00	1.00	1.00	1.00	1.00	1.00	1.00	1.00	1.00	1.00	1.00	1.00
PHF Adj:	1.00	1.00	1.00	1.00	1.00	1.00	1.00	1.00	1.00	1.00	1.00	1.00
PHF Volume:	184	272	114	170	168	134	434	2176	265	102	895	166
Reduct Vol:	0	0	0	0	0	0	0	0	0	0	0	0
Reduced Vol:	184	272	114	170	168	134	434	2176	265	102	895	166
PCE Adj:	1.00	1.00	1.00	1.00	1.00	1.00	1.00	1.00	1.00	1.00	1.00	1.00
MLF Adj:	1.00	1.00	1.00	1.00	1.00	1.00	1.00	1.00	1.00	1.00	1.00	1.00
FinalVolume:	184	272	114	170	168	134	434	2176	265	102	895	166
OvlAdjVol:						0						
Saturation Flow Module:												
Sat/Lane:	1600	1600	1600	1600	1600	1600	1600	1600	1600	1600	1600	1600
Adjustment:	1.00	1.00	1.00	1.00	1.00	1.00	1.00	1.00	1.00	1.00	1.00	1.00
Lanes:	1.00	1.40	0.60	1.51	1.49	2.00	2.00	3.00	1.00	1.00	3.37	0.63
Final Sat.:	1600	2241	959	2414	2386	3200	3200	4800	1600	1600	5398	1002
Capacity Analysis Module:												
Vol/Sat:	0.12	0.12	0.12	0.07	0.07	0.04	0.14	0.45	0.17	0.06	0.17	0.17
OvlAdjV/S:						0.00						
Crit Moves:		****		****				****		****		

Newport Banning Ranch
Year 2016 with Project - TPO Analysis
AM Peak Hour

Level Of Service Computation Report
ICU 1(Loss as Cycle Length %) Method (Future Volume Alternative)

Intersection #9 Newport Blvd/W. Coast Hwy

Cycle (sec):	120	Critical Vol./Cap.(X):	0.927
Loss Time (sec):	0 (Y+R=4.0 sec)	Average Delay (sec/veh):	xxxxxx
Optimal Cycle:	180	Level Of Service:	E

Street Name:	Newport Boulevard						W. Coast Highway					
Approach:	North Bound			South Bound			East Bound			West Bound		
Movement:	L - T - R			L - T - R			L - T - R			L - T - R		
Control:	Protected			Protected			Protected			Protected		
Rights:	Include			Include			Ignore			Ignore		
Min. Green:	0	0	0	0	0	0	0	0	0	0	0	0
Lanes:	0 0 0 0 0			2 0 0 0 1			0 0 2 0 1			0 0 3 0 1		
Volume Module:												
Base Vol:	0	0	0	383	0	288	0	2082	188	0	812	349
Growth Adj:	1.00	1.00	1.00	1.00	1.00	1.00	1.00	1.07	1.07	1.00	1.07	1.07
Initial Bse:	0	0	0	383	0	288	0	2232	202	0	870	374
Added Vol:	0	0	0	0	0	0	0	75	0	0	30	0
Committed P:	0	0	0	17	0	35	0	12	4	0	42	0
Initial Fut:	0	0	0	400	0	323	0	2319	206	0	942	374
User Adj:	1.00	1.00	1.00	1.00	1.00	1.00	1.00	1.00	0.00	1.00	1.00	0.00
PHF Adj:	1.00	1.00	1.00	1.00	1.00	1.00	1.00	1.00	0.00	1.00	1.00	0.00
PHF Volume:	0	0	0	400	0	323	0	2319	0	0	942	0
Reduct Vol:	0	0	0	0	0	0	0	0	0	0	0	0
Reduced Vol:	0	0	0	400	0	323	0	2319	0	0	942	0
PCE Adj:	1.00	1.00	1.00	1.00	1.00	1.00	1.00	1.00	0.00	1.00	1.00	0.00
MLF Adj:	1.00	1.00	1.00	1.00	1.00	1.00	1.00	1.00	0.00	1.00	1.00	0.00
FinalVolume:	0	0	0	400	0	323	0	2319	0	0	942	0
Saturation Flow Module:												
Sat/Lane:	1600	1600	1600	1600	1600	1600	1600	1600	1600	1600	1600	1600
Adjustment:	1.00	1.00	1.00	1.00	1.00	1.00	1.00	1.00	1.00	1.00	1.00	1.00
Lanes:	0.00	0.00	0.00	2.00	0.00	1.00	0.00	2.00	1.00	0.00	3.00	1.00
Final Sat.:	0	0	0	3200	0	1600	0	3200	1600	0	4800	1600
Capacity Analysis Module:												
Vol/Sat:	0.00	0.00	0.00	0.13	0.00	0.20	0.00	0.72	0.00	0.00	0.20	0.00
Crit Moves:						****		****		****		

Newport Banning Ranch
Year 2016 with Project - TPO Analysis
AM Peak Hour

Level Of Service Computation Report
ICU 1(Loss as Cycle Length %) Method (Future Volume Alternative)

Intersection #10 Riverside Ave/W. Coast Hwy

Cycle (sec):	120	Critical Vol./Cap.(X):	0.746
Loss Time (sec):	0 (Y+R=4.0 sec)	Average Delay (sec/veh):	xxxxxx
Optimal Cycle:	73	Level Of Service:	C

Street Name:	Riverside Avenue						W. Coast Highway					
Approach:	North Bound			South Bound			East Bound			West Bound		
Movement:	L - T - R			L - T - R			L - T - R			L - T - R		
Control:	Permitted			Permitted			Protected			Protected		
Rights:	Include			Ovl			Include			Include		
Min. Green:	0	0	0	0	0	0	0	0	0	0	0	0
Lanes:	0 0 0 0 1			0 1 0 0 1			1 0 1 1 0			1 0 3 0 1		
Volume Module:												
Base Vol:	0	0	1	77	4	304	312	1893	4	17	1124	67
Growth Adj:	1.00	1.00	1.00	1.00	1.00	1.00	1.07	1.07	1.07	1.07	1.07	1.07
Initial Bse:	0	0	1	77	4	304	334	2029	4	18	1205	72
Added Vol:	0	0	0	0	0	7	19	56	0	0	23	0
Committed P:	0	0	0	2	0	0	0	103	0	0	92	1
Initial Fut:	0	0	1	79	4	311	353	2188	4	18	1320	73
User Adj:	1.00	1.00	1.00	1.00	1.00	1.00	1.00	1.00	1.00	1.00	1.00	1.00
PHF Adj:	1.00	1.00	1.00	1.00	1.00	1.00	1.00	1.00	1.00	1.00	1.00	1.00
PHF Volume:	0	0	1	79	4	311	353	2188	4	18	1320	73
Reduct Vol:	0	0	0	0	0	0	0	0	0	0	0	0
Reduced Vol:	0	0	1	79	4	311	353	2188	4	18	1320	73
PCE Adj:	1.00	1.00	1.00	1.00	1.00	1.00	1.00	1.00	1.00	1.00	1.00	1.00
MLF Adj:	1.00	1.00	1.00	1.00	1.00	1.00	1.00	1.00	1.00	1.00	1.00	1.00
FinalVolume:	0	0	1	79	4	311	353	2188	4	18	1320	73
OvlAdjVol:						0						
Saturation Flow Module:												
Sat/Lane:	1600	1600	1600	1600	1600	1600	1600	1600	1600	1600	1600	1600
Adjustment:	1.00	1.00	1.00	1.00	1.00	1.00	1.00	1.00	1.00	1.00	1.00	1.00
Lanes:	0.00	0.00	1.00	0.95	0.05	1.00	1.00	1.99	0.01	1.00	3.00	1.00
Final Sat.:	0	0	1600	1523	77	1600	1600	3194	6	1600	4800	1600
Capacity Analysis Module:												
Vol/Sat:	0.00	0.00	0.00	0.05	0.05	0.19	0.22	0.69	0.69	0.01	0.27	0.05
OvlAdjV/S:						0.00						
Crit Moves:	****			****				****		****		

Newport Banning Ranch
Year 2016 with Project - TPO Analysis
AM Peak Hour

Level Of Service Computation Report
ICU 1(Loss as Cycle Length %) Method (Future Volume Alternative)

Intersection #11 Tustin Ave/W. Coast Hwy

Cycle (sec):	120	Critical Vol./Cap.(X):	0.748
Loss Time (sec):	0 (Y+R=4.0 sec)	Average Delay (sec/veh):	xxxxxx
Optimal Cycle:	180	Level Of Service:	C

Street Name:	Tustin Avenue						W. Coast Highway					
Approach:	North Bound			South Bound			East Bound			West Bound		
Movement:	L - T - R			L - T - R			L - T - R			L - T - R		
Control:	Permitted			Permitted			Protected			Permitted		
Rights:	Include			Include			Include			Include		
Min. Green:	0	0	0	0	0	0	0	0	0	0	0	0
Lanes:	0 0 1!	0 0		0 0 1!	0 0		1 0 1	1 0		0 0 3	0 1	
Volume Module:												
Base Vol:	0	0	0	33	1	14	42	1992	1	0	1220	35
Growth Adj:	1.00	1.00	1.00	1.00	1.00	1.00	1.07	1.07	1.07	1.07	1.07	1.07
Initial Bse:	0	0	0	33	1	14	45	2135	1	0	1308	38
Added Vol:	0	0	0	0	0	7	16	40	0	0	16	0
Committed P:	0	0	0	0	0	0	0	108	0	0	93	0
Initial Fut:	0	0	0	33	1	21	61	2283	1	0	1417	38
User Adj:	1.00	1.00	1.00	1.00	1.00	1.00	1.00	1.00	1.00	1.00	1.00	1.00
PHF Adj:	1.00	1.00	1.00	1.00	1.00	1.00	1.00	1.00	1.00	1.00	1.00	1.00
PHF Volume:	0	0	0	33	1	21	61	2283	1	0	1417	38
Reduct Vol:	0	0	0	0	0	0	0	0	0	0	0	0
Reduced Vol:	0	0	0	33	1	21	61	2283	1	0	1417	38
PCE Adj:	1.00	1.00	1.00	1.00	1.00	1.00	1.00	1.00	1.00	1.00	1.00	1.00
MLF Adj:	1.00	1.00	1.00	1.00	1.00	1.00	1.00	1.00	1.00	1.00	1.00	1.00
FinalVolume:	0	0	0	33	1	21	61	2283	1	0	1417	38
Saturation Flow Module:												
Sat/Lane:	1600	1600	1600	1600	1600	1600	1600	1600	1600	1600	1600	1600
Adjustment:	1.00	1.00	1.00	1.00	1.00	1.00	1.00	1.00	1.00	1.00	1.00	1.00
Lanes:	0.00	1.00	0.00	0.60	0.02	0.38	1.00	1.99	0.01	0.00	3.00	1.00
Final Sat.:	0	1600	0	960	29	611	1600	3198	2	0	4800	1600
Capacity Analysis Module:												
Vol/Sat:	0.00	0.00	0.00	0.02	0.03	0.03	0.04	0.71	0.71	0.00	0.30	0.02
Crit Moves:					****			****				

Newport Banning Ranch
Year 2016 with Project - TPO Analysis
AM Peak Hour

Level Of Service Computation Report
ICU 1(Loss as Cycle Length %) Method (Future Volume Alternative)

Intersection #12 Dover Dr/W. Coast Hwy

Cycle (sec):	120	Critical Vol./Cap.(X):	0.693
Loss Time (sec):	0 (Y+R=4.0 sec)	Average Delay (sec/veh):	xxxxxx
Optimal Cycle:	74	Level Of Service:	B

Street Name:	Dover Drive									W. Coast Highway								
Approach:	North Bound						South Bound						East Bound						West Bound					
Movement:	L	-	T	-	R		L	-	T	-	R		L	-	T	-	R		L	-	T	-	R	
Control:	Split Phase						Split Phase						Protected						Protected					
Rights:	Include						Include						Include						Ignore					
Min. Green:	0	0	0				0	0	0				0	0	0				0	0	0			
Lanes:	1	0	1	1	0		3	0	1	0	1		2	0	2	1	0		1	0	3	0	1	
Volume Module:																								
Base Vol:	16		61		29		840		51		108		117		1912		25		42		1212		469	
Growth Adj:	1.00		1.00		1.00		1.00		1.00		1.00		1.07		1.07		1.07		1.07		1.07		1.07	
Initial Bse:	16		61		29		840		51		108		125		2050		27		45		1299		503	
Added Vol:	0		0		0		0		0		0		0		40		0		0		16		0	
Committed P:	0		0		0		9		0		18		10		93		0		0		91		7	
Initial Fut:	16		61		29		849		51		126		135		2183		27		45		1406		510	
User Adj:	1.00		1.00		1.00		1.00		1.00		1.00		1.00		1.00		1.00		1.00		1.00		0.00	
PHF Adj:	1.00		1.00		1.00		1.00		1.00		1.00		1.00		1.00		1.00		1.00		1.00		0.00	
PHF Volume:	16		61		29		849		51		126		135		2183		27		45		1406		0	
Reduct Vol:	0		0		0		0		0		0		0		0		0		0		0		0	
Reduced Vol:	16		61		29		849		51		126		135		2183		27		45		1406		0	
PCE Adj:	1.00		1.00		1.00		1.00		1.00		1.00		1.00		1.00		1.00		1.00		1.00		0.00	
MLF Adj:	1.00		1.00		1.00		1.00		1.00		1.00		1.00		1.00		1.00		1.00		1.00		0.00	
FinalVolume:	16		61		29		849		51		126		135		2183		27		45		1406		0	
Saturation Flow Module:																								
Sat/Lane:	1600		1600		1600		1600		1600		1600		1600		1600		1600		1600		1600		1600	
Adjustment:	1.00		1.00		1.00		1.00		1.00		1.00		1.00		1.00		1.00		1.00		1.00		1.00	
Lanes:	1.00		1.36		0.64		3.00		1.00		1.00		2.00		2.96		0.04		1.00		3.00		1.00	
Final Sat.:	1600		2169		1031		4800		1600		1600		3200		4742		58		1600		4800		1600	
Capacity Analysis Module:																								
Vol/Sat:	0.01		0.03		0.03		0.18		0.03		0.08		0.04		0.46		0.46		0.03		0.29		0.00	
Crit Moves:					****		****								****				****					

Newport Banning Ranch
Year 2016 with Project - TPO Analysis
AM Peak Hour

Level Of Service Computation Report
ICU 1(Loss as Cycle Length %) Method (Future Volume Alternative)

Intersection #13 Magnolia St/Hamilton Ave

Cycle (sec):	100	Critical Vol./Cap.(X):	0.591
Loss Time (sec):	5 (Y+R=4.0 sec)	Average Delay (sec/veh):	xxxxxx
Optimal Cycle:	28	Level Of Service:	A

Street Name:	Magnolia Street						Hamilton Avenue					
Approach:	North Bound			South Bound			East Bound			West Bound		
Movement:	L - T - R			L - T - R			L - T - R			L - T - R		
Control:	Prot+Permit			Prot+Permit			Permitted			Permitted		
Rights:	Include			Include			Include			Include		
Min. Green:	0	0	0	0	0	0	0	0	0	0	0	0
Lanes:	1 0 1	1 0		1 0 2	0 1		1 0 0	1 0		1 0 1	0 1	
Volume Module:												
Base Vol:	56	241	42	197	303	35	67	273	145	66	172	368
Growth Adj:	1.07	1.07	1.07	1.07	1.07	1.07	1.07	1.07	1.07	1.07	1.07	1.07
Initial Bse:	60	258	45	211	325	38	72	293	155	71	184	394
Added Vol:	29	29	0	5	9	0	0	4	10	0	9	9
Committed P:	2	3	0	0	6	0	0	0	3	0	0	0
Initial Fut:	91	290	45	216	340	38	72	297	168	71	193	403
User Adj:	1.00	1.00	1.00	1.00	1.00	1.00	1.00	1.00	1.00	1.00	1.00	1.00
PHF Adj:	1.00	1.00	1.00	1.00	1.00	1.00	1.00	1.00	1.00	1.00	1.00	1.00
PHF Volume:	91	290	45	216	340	38	72	297	168	71	193	403
Reduct Vol:	0	0	0	0	0	0	0	0	0	0	0	0
Reduced Vol:	91	290	45	216	340	38	72	297	168	71	193	403
PCE Adj:	1.00	1.00	1.00	1.00	1.00	1.00	1.00	1.00	1.00	1.00	1.00	1.00
MLF Adj:	1.00	1.00	1.00	1.00	1.00	1.00	1.00	1.00	1.00	1.00	1.00	1.00
FinalVolume:	91	290	45	216	340	38	72	297	168	71	193	403
Saturation Flow Module:												
Sat/Lane:	1600	1600	1600	1600	1600	1600	1600	1600	1600	1600	1600	1600
Adjustment:	1.06	1.06	1.06	1.06	1.06	1.06	1.06	1.06	1.06	1.06	1.06	1.06
Lanes:	1.00	1.73	0.27	1.00	2.00	1.00	1.00	0.64	0.36	1.00	1.00	1.00
Final Sat.:	1700	2944	456	1700	3400	1700	1700	1084	616	1700	1700	1700
Capacity Analysis Module:												
Vol/Sat:	0.05	0.10	0.10	0.13	0.10	0.02	0.04	0.27	0.27	0.04	0.11	0.24
Crit Moves:		****		****				****		****		

Newport Banning Ranch
Year 2016 with Project - TPO Analysis
AM Peak Hour

Level Of Service Computation Report
ICU 1(Loss as Cycle Length %) Method (Future Volume Alternative)

Intersection #14 Bushard St/Hamilton Ave

Cycle (sec):	100	Critical Vol./Cap.(X):	0.452
Loss Time (sec):	5 (Y+R=4.0 sec)	Average Delay (sec/veh):	xxxxxx
Optimal Cycle:	22	Level Of Service:	A

Street Name:	Bushard Street						Hamilton Avenue					
Approach:	North Bound			South Bound			East Bound			West Bound		
Movement:	L - T - R			L - T - R			L - T - R			L - T - R		
Control:	Permitted			Permitted			Permitted			Permitted		
Rights:	Include			Include			Include			Include		
Min. Green:	0	0	0	0	0	0	0	0	0	0	0	0
Lanes:	1 0 1	1 0		1 0 1	1 0		1 0 1	1 0		1 0 1	1 0	
Volume Module:												
Base Vol:	66	176	51	188	297	145	59	526	33	52	409	94
Growth Adj:	1.07	1.07	1.07	1.07	1.07	1.07	1.07	1.07	1.07	1.07	1.07	1.07
Initial Bse:	71	189	55	202	318	155	63	564	35	56	438	101
Added Vol:	0	0	0	0	0	0	0	9	0	0	18	0
Committed P:	0	0	0	0	0	0	0	0	0	0	0	0
Initial Fut:	71	189	55	202	318	155	63	573	35	56	456	101
User Adj:	1.00	1.00	1.00	1.00	1.00	1.00	1.00	1.00	1.00	1.00	1.00	1.00
PHF Adj:	1.00	1.00	1.00	1.00	1.00	1.00	1.00	1.00	1.00	1.00	1.00	1.00
PHF Volume:	71	189	55	202	318	155	63	573	35	56	456	101
Reduct Vol:	0	0	0	0	0	0	0	0	0	0	0	0
Reduced Vol:	71	189	55	202	318	155	63	573	35	56	456	101
PCE Adj:	1.00	1.00	1.00	1.00	1.00	1.00	1.00	1.00	1.00	1.00	1.00	1.00
MLF Adj:	1.00	1.00	1.00	1.00	1.00	1.00	1.00	1.00	1.00	1.00	1.00	1.00
FinalVolume:	71	189	55	202	318	155	63	573	35	56	456	101
Saturation Flow Module:												
Sat/Lane:	1600	1600	1600	1600	1600	1600	1600	1600	1600	1600	1600	1600
Adjustment:	1.06	1.06	1.06	1.06	1.06	1.06	1.06	1.06	1.06	1.06	1.06	1.06
Lanes:	1.00	1.55	0.45	1.00	1.34	0.66	1.00	1.88	0.12	1.00	1.64	0.36
Final Sat.:	1700	2636	764	1700	2285	1115	1700	3202	198	1700	2785	615
Capacity Analysis Module:												
Vol/Sat:	0.04	0.07	0.07	0.12	0.14	0.14	0.04	0.18	0.18	0.03	0.16	0.16
Crit Moves:		****		****				****		****		

Newport Banning Ranch
Year 2016 with Project - TPO Analysis
AM Peak Hour

Level Of Service Computation Report
ICU 1(Loss as Cycle Length %) Method (Future Volume Alternative)

Intersection #15 Brookhurst St/Hamilton Ave (Victoria St)

Cycle (sec):	100	Critical Vol./Cap.(X):	0.721
Loss Time (sec):	5 (Y+R=4.0 sec)	Average Delay (sec/veh):	xxxxxx
Optimal Cycle:	40	Level Of Service:	C

Street Name:	Brookhurst						Hamilton Avenue (Victoria Street)					
Approach:	North Bound			South Bound			East Bound			West Bound		
Movement:	L - T - R			L - T - R			L - T - R			L - T - R		
Control:	Protected			Protected			Prot+Permit			Prot+Permit		
Rights:	Include			Include			Include			Include		
Min. Green:	0	0	0	0	0	0	0	0	0	0	0	0
Lanes:	1 0 3 0 1			2 0 2 1 0			1 0 1 1 0			1 0 2 0 1		
Volume Module:												
Base Vol:	59	289	321	501	483	110	95	683	47	124	348	277
Growth Adj:	1.07	1.07	1.07	1.07	1.07	1.07	1.07	1.07	1.07	1.07	1.07	1.07
Initial Bse:	63	310	344	537	518	118	102	732	50	133	373	297
Added Vol:	18	38	0	0	14	0	0	0	9	0	0	0
Committed P:	0	1	0	0	3	0	0	0	0	0	0	0
Initial Fut:	81	349	344	537	535	118	102	732	59	133	373	297
User Adj:	1.00	1.00	1.00	1.00	1.00	1.00	1.00	1.00	1.00	1.00	1.00	1.00
PHF Adj:	1.00	1.00	1.00	1.00	1.00	1.00	1.00	1.00	1.00	1.00	1.00	1.00
PHF Volume:	81	349	344	537	535	118	102	732	59	133	373	297
Reduct Vol:	0	0	0	0	0	0	0	0	0	0	0	0
Reduced Vol:	81	349	344	537	535	118	102	732	59	133	373	297
PCE Adj:	1.00	1.00	1.00	1.00	1.00	1.00	1.00	1.00	1.00	1.00	1.00	1.00
MLF Adj:	1.00	1.00	1.00	1.00	1.00	1.00	1.00	1.00	1.00	1.00	1.00	1.00
FinalVolume:	81	349	344	537	535	118	102	732	59	133	373	297
Saturation Flow Module:												
Sat/Lane:	1600	1600	1600	1600	1600	1600	1600	1600	1600	1600	1600	1600
Adjustment:	1.06	1.06	1.06	1.06	1.06	1.06	1.06	1.06	1.06	1.06	1.06	1.06
Lanes:	1.00	3.00	1.00	2.00	2.46	0.54	1.00	1.85	0.15	1.00	2.00	1.00
Final Sat.:	1700	5100	1700	3400	4179	921	1700	3145	255	1700	3400	1700
Capacity Analysis Module:												
Vol/Sat:	0.05	0.07	0.20	0.16	0.13	0.13	0.06	0.23	0.23	0.08	0.11	0.17
Crit Moves:			****	****				****		****		

Newport Banning Ranch
Year 2016 with Project - TPO Analysis
AM Peak Hour

Level Of Service Computation Report
ICU 1(Loss as Cycle Length %) Method (Future Volume Alternative)

Intersection #16 Magnolia St/Banning Ave

Cycle (sec):	100	Critical Vol./Cap.(X):	0.265
Loss Time (sec):	5 (Y+R=4.0 sec)	Average Delay (sec/veh):	xxxxxx
Optimal Cycle:	17	Level Of Service:	A

Street Name:	Magnolia Street									Banning Avenue								
Approach:	North Bound			South Bound			East Bound			West Bound		
Movement:	L	- T	- R	L	- T	- R	L	- T	- R	L	- T	- R
Control:	Protected			Protected			Split Phase			Split Phase		
Rights:	Include			Include			Include			Include		
Min. Green:	0	0	0	0	0	0	0	0	0	0	0	0
Lanes:	0 0	1 1	0	1 0	2 0	0	0 0	0 0	0	2 0	0 0	1
Volume Module:												
Base Vol:	0	197	37	82	376	0	0	0	0	62	0	112
Growth Adj:	1.07	1.07	1.07	1.07	1.07	1.07	1.07	1.07	1.07	1.07	1.07	1.07
Initial Bse:	0	211	40	88	403	0	0	0	0	66	0	120
Added Vol:	0	58	0	0	18	0	0	0	0	0	0	0
Committed P:	0	7	0	0	12	0	0	0	0	0	0	0
Initial Fut:	0	276	40	88	433	0	0	0	0	66	0	120
User Adj:	1.00	1.00	1.00	1.00	1.00	1.00	1.00	1.00	1.00	1.00	1.00	1.00
PHF Adj:	1.00	1.00	1.00	1.00	1.00	1.00	1.00	1.00	1.00	1.00	1.00	1.00
PHF Volume:	0	276	40	88	433	0	0	0	0	66	0	120
Reduct Vol:	0	0	0	0	0	0	0	0	0	0	0	0
Reduced Vol:	0	276	40	88	433	0	0	0	0	66	0	120
PCE Adj:	1.00	1.00	1.00	1.00	1.00	1.00	1.00	1.00	1.00	1.00	1.00	1.00
MLF Adj:	1.00	1.00	1.00	1.00	1.00	1.00	1.00	1.00	1.00	1.00	1.00	1.00
FinalVolume:	0	276	40	88	433	0	0	0	0	66	0	120
Saturation Flow Module:												
Sat/Lane:	1600	1600	1600	1600	1600	1600	1600	1600	1600	1600	1600	1600
Adjustment:	1.06	1.06	1.06	1.06	1.06	1.06	1.06	1.06	1.06	1.06	1.06	1.06
Lanes:	0.00	1.75	0.25	1.00	2.00	0.00	0.00	0.00	0.00	2.00	0.00	1.00
Final Sat.:	0	2973	427	1700	3400	0	0	0	0	3400	0	1700
Capacity Analysis Module:												
Vol/Sat:	0.00	0.09	0.09	0.05	0.13	0.00	0.00	0.00	0.00	0.02	0.00	0.07
Crit Moves:		****		****								****

Newport Banning Ranch
Year 2016 with Project - TPO Analysis
AM Peak Hour

Level Of Service Computation Report
2000 HCM 4-Way Stop Method (Future Volume Alternative)

Intersection #17 Bushard St/Banning Ave

Cycle (sec):	100	Critical Vol./Cap.(X):	0.304
Loss Time (sec):	5 (Y+R=4.0 sec)	Average Delay (sec/veh):	10.2
Optimal Cycle:	0	Level Of Service:	B

Street Name:	Bushard Street						Banning Avenue					
Approach:	North Bound			South Bound			East Bound			West Bound		
Movement:	L - T - R			L - T - R			L - T - R			L - T - R		
Control:	Stop Sign			Stop Sign			Stop Sign			Stop Sign		
Rights:	Include			Include			Include			Include		
Min. Green:	0	0	0	0	0	0	0	0	0	0	0	0
Lanes:	1 0 1	1 0		1 0 1	1 0		1 0 0	1 0		1 0 0	1 0	
Volume Module:												
Base Vol:	14	86	15	16	220	121	53	84	28	7	114	19
Growth Adj:	1.07	1.07	1.07	1.07	1.07	1.07	1.07	1.07	1.07	1.07	1.07	1.07
Initial Bse:	15	92	16	17	236	130	57	90	30	8	122	20
Added Vol:	0	0	0	0	0	0	0	0	0	0	0	0
Committed P:	0	0	0	0	3	0	0	0	0	0	0	0
Initial Fut:	15	92	16	17	239	130	57	90	30	8	122	20
User Adj:	1.00	1.00	1.00	1.00	1.00	1.00	1.00	1.00	1.00	1.00	1.00	1.00
PHF Adj:	1.00	1.00	1.00	1.00	1.00	1.00	1.00	1.00	1.00	1.00	1.00	1.00
PHF Volume:	15	92	16	17	239	130	57	90	30	8	122	20
Reduct Vol:	0	0	0	0	0	0	0	0	0	0	0	0
Reduced Vol:	15	92	16	17	239	130	57	90	30	8	122	20
PCE Adj:	1.00	1.00	1.00	1.00	1.00	1.00	1.00	1.00	1.00	1.00	1.00	1.00
MLF Adj:	1.00	1.00	1.00	1.00	1.00	1.00	1.00	1.00	1.00	1.00	1.00	1.00
FinalVolume:	15	92	16	17	239	130	57	90	30	8	122	20
Saturation Flow Module:												
Adjustment:	1.00	1.00	1.00	1.00	1.00	1.00	1.00	1.00	1.00	1.00	1.00	1.00
Lanes:	1.00	1.70	0.30	1.00	1.30	0.70	1.00	0.75	0.25	1.00	0.86	0.14
Final Sat.:	494	917	163	545	785	454	524	437	146	519	490	82
Capacity Analysis Module:												
Vol/Sat:	0.03	0.10	0.10	0.03	0.30	0.29	0.11	0.21	0.21	0.01	0.25	0.25
Crit Moves:		****			****			****			****	
Delay/Veh:	9.7	9.6	9.5	9.2	10.8	10.1	10.0	9.9	9.9	9.3	10.5	10.5
Delay Adj:	1.00	1.00	1.00	1.00	1.00	1.00	1.00	1.00	1.00	1.00	1.00	1.00
AdjDel/Veh:	9.7	9.6	9.5	9.2	10.8	10.1	10.0	9.9	9.9	9.3	10.5	10.5
LOS by Move:	A	A	A	A	B	B	A	A	A	A	B	B
ApproachDel:		9.6			10.5			9.9			10.4	
Delay Adj:		1.00			1.00			1.00			1.00	
ApprAdjDel:		9.6			10.5			9.9			10.4	
LOS by Appr:		A			B			A			B	
AllWayAvgQ:	0.0	0.1	0.1	0.0	0.4	0.4	0.1	0.2	0.2	0.0	0.3	0.3

Newport Banning Ranch
Year 2016 with Project - TPO Analysis
AM Peak Hour

Note: Queue reported is the number of cars per lane.

Newport Banning Ranch
Year 2016 with Project - TPO Analysis
AM Peak Hour

Level Of Service Computation Report
ICU 1(Loss as Cycle Length %) Method (Future Volume Alternative)

Intersection #18 Brookhurst St/Banning Ave

Cycle (sec):	100	Critical Vol./Cap.(X):	0.273
Loss Time (sec):	5 (Y+R=4.0 sec)	Average Delay (sec/veh):	xxxxxx
Optimal Cycle:	17	Level Of Service:	A

Street Name:	Brookhurst Street						Banning Avenue					
Approach:	North Bound			South Bound			East Bound			West Bound		
Movement:	L - T - R			L - T - R			L - T - R			L - T - R		
Control:	Protected			Protected			Split Phase			Split Phase		
Rights:	Include			Include			Include			Include		
Min. Green:	0	0	0	0	0	0	0	0	0	0	0	0
Lanes:	1 0 3 0 0			0 0 2 1 0			1 0 0 0 1			0 0 0 0 0		
Volume Module:												
Base Vol:	7	477	0	0	535	102	126	0	14	0	0	0
Growth Adj:	1.07	1.07	1.07	1.07	1.07	1.07	1.07	1.07	1.07	1.07	1.07	1.07
Initial Bse:	8	511	0	0	574	109	135	0	15	0	0	0
Added Vol:	0	56	0	0	23	0	0	0	0	0	0	0
Committed P:	0	3	0	0	6	0	0	0	0	0	0	0
Initial Fut:	8	570	0	0	603	109	135	0	15	0	0	0
User Adj:	1.00	1.00	1.00	1.00	1.00	1.00	1.00	1.00	1.00	1.00	1.00	1.00
PHF Adj:	1.00	1.00	1.00	1.00	1.00	1.00	1.00	1.00	1.00	1.00	1.00	1.00
PHF Volume:	8	570	0	0	603	109	135	0	15	0	0	0
Reduct Vol:	0	0	0	0	0	0	0	0	0	0	0	0
Reduced Vol:	8	570	0	0	603	109	135	0	15	0	0	0
PCE Adj:	1.00	1.00	1.00	1.00	1.00	1.00	1.00	1.00	1.00	1.00	1.00	1.00
MLF Adj:	1.00	1.00	1.00	1.00	1.00	1.00	1.00	1.00	1.00	1.00	1.00	1.00
FinalVolume:	8	570	0	0	603	109	135	0	15	0	0	0
Saturation Flow Module:												
Sat/Lane:	1600	1600	1600	1600	1600	1600	1600	1600	1600	1600	1600	1600
Adjustment:	1.06	1.06	1.06	1.06	1.06	1.06	1.06	1.06	1.06	1.06	1.06	1.06
Lanes:	1.00	3.00	0.00	0.00	2.54	0.46	1.00	0.00	1.00	0.00	0.00	0.00
Final Sat.:	1700	5100	0	0	4317	783	1700	0	1700	0	0	0
Capacity Analysis Module:												
Vol/Sat:	0.00	0.11	0.00	0.00	0.14	0.14	0.08	0.00	0.01	0.00	0.00	0.00
Crit Moves:	****				****		****					

Newport Banning Ranch
Year 2016 with Project - TPO Analysis
AM Peak Hour

Level Of Service Computation Report
ICU 1(Loss as Cycle Length %) Method (Future Volume Alternative)

Intersection #19 Magnolia St/PCH

Cycle (sec):	120	Critical Vol./Cap.(X):	0.523
Loss Time (sec):	6 (Y+R=4.0 sec)	Average Delay (sec/veh):	xxxxxx
Optimal Cycle:	27	Level Of Service:	A

Street Name:	Magnolia Street						Pacific Coast Highway					
Approach:	North Bound			South Bound			East Bound			West Bound		
Movement:	L - T - R			L - T - R			L - T - R			L - T - R		
Control:	Split Phase			Split Phase			Protected			Protected		
Rights:	Include			Include			Include			Include		
Min. Green:	0	0	0	0	0	0	0	0	0	0	0	0
Lanes:	1 0 0 1 0			1 1 0 0 1			1 0 3 0 1			1 0 3 0 1		
Volume Module:												
Base Vol:	3	24	7	232	41	137	116	1607	17	18	614	50
Growth Adj:	1.07	1.07	1.07	1.07	1.07	1.07	1.07	1.07	1.07	1.07	1.07	1.07
Initial Bse:	3	26	8	249	44	147	124	1723	18	19	658	54
Added Vol:	0	0	0	18	0	0	0	14	0	0	38	58
Committed P:	0	0	0	12	0	0	0	35	0	0	21	7
Initial Fut:	3	26	8	279	44	147	124	1772	18	19	717	119
User Adj:	1.00	1.00	1.00	1.00	1.00	1.00	1.00	1.00	1.00	1.00	1.00	1.00
PHF Adj:	1.00	1.00	1.00	1.00	1.00	1.00	1.00	1.00	1.00	1.00	1.00	1.00
PHF Volume:	3	26	8	279	44	147	124	1772	18	19	717	119
Reduct Vol:	0	0	0	0	0	0	0	0	0	0	0	0
Reduced Vol:	3	26	8	279	44	147	124	1772	18	19	717	119
PCE Adj:	1.00	1.00	1.00	1.00	1.00	1.00	1.00	1.00	1.00	1.00	1.00	1.00
MLF Adj:	1.00	1.00	1.00	1.00	1.00	1.00	1.00	1.00	1.00	1.00	1.00	1.00
FinalVolume:	3	26	8	279	44	147	124	1772	18	19	717	119
Saturation Flow Module:												
Sat/Lane:	1600	1600	1600	1600	1600	1600	1600	1600	1600	1600	1600	1600
Adjustment:	1.06	1.06	1.06	1.06	1.06	1.06	1.06	1.06	1.06	1.06	1.06	1.06
Lanes:	1.00	0.77	0.23	1.73	0.27	1.00	1.00	3.00	1.00	1.00	3.00	1.00
Final Sat.:	1700	1316	384	2937	463	1700	1700	5100	1700	1700	5100	1700
Capacity Analysis Module:												
Vol/Sat:	0.00	0.02	0.02	0.09	0.09	0.09	0.07	0.35	0.01	0.01	0.14	0.07
Crit Moves:		****		****				****		****		

Newport Banning Ranch
Year 2016 with Project - TPO Analysis
AM Peak Hour

Level Of Service Computation Report
ICU 1(Loss as Cycle Length %) Method (Future Volume Alternative)

Intersection #20 Brookhurst St/Bushard St

Cycle (sec):	100	Critical Vol./Cap.(X):	0.346
Loss Time (sec):	5 (Y+R=4.0 sec)	Average Delay (sec/veh):	xxxxxx
Optimal Cycle:	18	Level Of Service:	A

Street Name:	Brookhurst Street									Bushard Street								
Approach:	North Bound				South Bound				East Bound					West Bound				
Movement:	L	-	T	-	R	L	-	T	-	R	L	-	T	-	R	L	-	T	-	R
Control:	Protected					Protected					Permitted					Permitted				
Rights:	Include					Include					Include					Include				
Min. Green:	0	0	0			0	0	0			0	0	0			0	0	0		
Lanes:	1	0	2	1	0	1	0	3	0	1	1	0	0	0	1	0	0	0	1	0
Volume Module:																				
Base Vol:	79	427	2			2	487	10			8	0	210			0	1	4		
Growth Adj:	1.07	1.07	1.07			1.07	1.07	1.07			1.07	1.07	1.07			1.07	1.07	1.07		
Initial Bse:	85	458	2			2	522	11			9	0	225			0	1	4		
Added Vol:	0	56	0			0	23	0			0	0	0			0	0	0		
Committed P:	3	6	0			0	9	0			0	0	6			0	0	0		
Initial Fut:	88	520	2			2	554	11			9	0	231			0	1	4		
User Adj:	1.00	1.00	1.00			1.00	1.00	1.00			1.00	1.00	1.00			1.00	1.00	1.00		
PHF Adj:	1.00	1.00	1.00			1.00	1.00	1.00			1.00	1.00	1.00			1.00	1.00	1.00		
PHF Volume:	88	520	2			2	554	11			9	0	231			0	1	4		
Reduct Vol:	0	0	0			0	0	0			0	0	0			0	0	0		
Reduced Vol:	88	520	2			2	554	11			9	0	231			0	1	4		
PCE Adj:	1.00	1.00	1.00			1.00	1.00	1.00			1.00	1.00	1.00			1.00	1.00	1.00		
MLF Adj:	1.00	1.00	1.00			1.00	1.00	1.00			1.00	1.00	1.00			1.00	1.00	1.00		
FinalVolume:	88	520	2			2	554	11			9	0	231			0	1	4		
Saturation Flow Module:																				
Sat/Lane:	1600	1600	1600			1600	1600	1600			1600	1600	1600			1600	1600	1600		
Adjustment:	1.06	1.06	1.06			1.06	1.06	1.06			1.06	1.06	1.06			1.06	1.06	1.06		
Lanes:	1.00	2.99	0.01			1.00	3.00	1.00			1.00	0.00	1.00			0.00	0.20	0.80		
Final Sat.:	1700	5079	21			1700	5100	1700			1700	0	1700			0	340	1360		
Capacity Analysis Module:																				
Vol/Sat:	0.05	0.10	0.10			0.00	0.11	0.01			0.01	0.00	0.14			0.00	0.00	0.00		
Crit Moves:	****						****						****			****				

Newport Banning Ranch
Year 2016 with Project - TPO Analysis
AM Peak Hour

Level Of Service Computation Report
ICU 1(Loss as Cycle Length %) Method (Future Volume Alternative)

Intersection #21 Brookhurst St/PCH

Cycle (sec):	120	Critical Vol./Cap.(X):	0.624
Loss Time (sec):	6 (Y+R=4.0 sec)	Average Delay (sec/veh):	xxxxxx
Optimal Cycle:	34	Level Of Service:	B

Street Name:	Brookhurst Street						Pacific Coast HIghway					
Approach:	North Bound			South Bound			East Bound			West Bound		
Movement:	L - T - R			L - T - R			L - T - R			L - T - R		
Control:	Split Phase			Split Phase			Protected			Protected		
Rights:	Include			Include			Include			Ovl		
Min. Green:	0	0	0	0	0	0	0	0	0	0	0	0
Lanes:	1 0 0 1 0			2 0 1 0 1			1 0 3 0 1			1 0 3 0 1		
Volume Module:												
Base Vol:	4	19	12	513	6	117	166	1721	2	6	639	305
Growth Adj:	1.07	1.07	1.07	1.07	1.07	1.07	1.07	1.07	1.07	1.07	1.07	1.07
Initial Bse:	4	20	13	550	6	125	178	1845	2	6	685	327
Added Vol:	0	0	0	23	0	0	0	33	0	0	96	56
Committed P:	0	0	0	15	0	0	0	47	0	0	28	9
Initial Fut:	4	20	13	588	6	125	178	1925	2	6	809	392
User Adj:	1.00	1.00	1.00	1.00	1.00	1.00	1.00	1.00	1.00	1.00	1.00	1.00
PHF Adj:	1.00	1.00	1.00	1.00	1.00	1.00	1.00	1.00	1.00	1.00	1.00	1.00
PHF Volume:	4	20	13	588	6	125	178	1925	2	6	809	392
Reduct Vol:	0	0	0	0	0	0	0	0	0	0	0	0
Reduced Vol:	4	20	13	588	6	125	178	1925	2	6	809	392
PCE Adj:	1.00	1.00	1.00	1.00	1.00	1.00	1.00	1.00	1.00	1.00	1.00	1.00
MLF Adj:	1.00	1.00	1.00	1.00	1.00	1.00	1.00	1.00	1.00	1.00	1.00	1.00
FinalVolume:	4	20	13	588	6	125	178	1925	2	6	809	392
OvlAdjVol:												98
Saturation Flow Module:												
Sat/Lane:	1600	1600	1600	1600	1600	1600	1600	1600	1600	1600	1600	1600
Adjustment:	1.06	1.06	1.06	1.06	1.06	1.06	1.06	1.06	1.06	1.06	1.06	1.06
Lanes:	1.00	0.61	0.39	2.00	1.00	1.00	1.00	3.00	1.00	1.00	3.00	1.00
Final Sat.:	1700	1042	658	3400	1700	1700	1700	5100	1700	1700	5100	1700
Capacity Analysis Module:												
Vol/Sat:	0.00	0.02	0.02	0.17	0.00	0.07	0.10	0.38	0.00	0.00	0.16	0.23
OvlAdjV/S:												0.06
Crit Moves:		****		****				****		****		

Newport Banning Ranch
Year 2016 with Project - TPO Analysis
AM Peak Hour

Level Of Service Computation Report
ICU 1(Loss as Cycle Length %) Method (Future Volume Alternative)

Intersection #22 Placentia Ave/Victoria St

Cycle (sec):	100	Critical Vol./Cap.(X):	0.802
Loss Time (sec):	0 (Y+R=4.0 sec)	Average Delay (sec/veh):	xxxxxx
Optimal Cycle:	115	Level Of Service:	D

Street Name:	Placentia Avenue									Victoria Street								
Approach:	North Bound					South Bound				East Bound					West Bound			
Movement:	L	-	T	-	R	L	-	T	-	R	L	-	T	-	R	L	-	T	-	R
Control:	Protected					Protected					Protected					Protected				
Rights:	Include					Include					Ovl					Include				
Min. Green:	0	0	0			0	0	0			0	0	0			0	0	0		
Lanes:	2	0	2	0	1	1	0	2	0	1	1	0	2	0	1	1	0	2	0	1
Volume Module:																				
Base Vol:	271	404	169			122	559	45			80	1192	464			179	493	101		
Growth Adj:	1.07	1.07	1.07			1.07	1.07	1.07			1.07	1.07	1.07			1.07	1.07	1.07		
Initial Bse:	291	433	181			131	599	48			86	1278	497			192	528	108		
Added Vol:	0	38	0			0	14	0			0	0	0			0	0	0		
Committed P:	0	0	0			0	0	0			0	0	0			0	0	0		
Initial Fut:	291	471	181			131	613	48			86	1278	497			192	528	108		
User Adj:	1.00	1.00	1.00			1.00	1.00	1.00			1.00	1.00	1.00			1.00	1.00	1.00		
PHF Adj:	1.00	1.00	1.00			1.00	1.00	1.00			1.00	1.00	1.00			1.00	1.00	1.00		
PHF Volume:	291	471	181			131	613	48			86	1278	497			192	528	108		
Reduct Vol:	0	0	0			0	0	0			0	0	0			0	0	0		
Reduced Vol:	291	471	181			131	613	48			86	1278	497			192	528	108		
PCE Adj:	1.00	1.00	1.00			1.00	1.00	1.00			1.00	1.00	1.00			1.00	1.00	1.00		
MLF Adj:	1.00	1.00	1.00			1.00	1.00	1.00			1.00	1.00	1.00			1.00	1.00	1.00		
FinalVolume:	291	471	181			131	613	48			86	1278	497			192	528	108		
OvlAdjVol:													352							
Saturation Flow Module:																				
Sat/Lane:	1600	1600	1600			1600	1600	1600			1600	1600	1600			1600	1600	1600		
Adjustment:	1.00	1.00	1.00			1.00	1.00	1.00			1.00	1.00	1.00			1.00	1.00	1.00		
Lanes:	2.00	2.00	1.00			1.00	2.00	1.00			1.00	2.00	1.00			1.00	2.00	1.00		
Final Sat.:	3200	3200	1600			1600	3200	1600			1600	3200	1600			1600	3200	1600		
Capacity Analysis Module:																				
Vol/Sat:	0.09	0.15	0.11			0.08	0.19	0.03			0.05	0.40	0.31			0.12	0.17	0.07		
OvlAdjV/S:													0.22							
Crit Moves:	****						****					****				****				

Newport Banning Ranch
Year 2016 with Project - TPO Analysis
AM Peak Hour

Level Of Service Computation Report
ICU 1(Loss as Cycle Length %) Method (Future Volume Alternative)

Intersection #23 Pomona Ave/Victoria St

Cycle (sec):	100	Critical Vol./Cap.(X):	0.673
Loss Time (sec):	0 (Y+R=4.0 sec)	Average Delay (sec/veh):	xxxxxx
Optimal Cycle:	44	Level Of Service:	B

Street Name:	Pomona Avenue						Victoria Street					
Approach:	North Bound			South Bound			East Bound			West Bound		
Movement:	L - T - R			L - T - R			L - T - R			L - T - R		
Control:	Permitted			Permitted			Permitted			Permitted		
Rights:	Include			Include			Include			Include		
Min. Green:	0	0	0	0	0	0	0	0	0	0	0	0
Lanes:	1 0 0 1 0			1 0 0 1 0			1 0 2 0 1			1 0 2 0 1		
Volume Module:												
Base Vol:	32	89	77	10	110	14	15	1486	52	86	690	18
Growth Adj:	1.07	1.07	1.07	1.07	1.07	1.07	1.07	1.07	1.07	1.07	1.07	1.07
Initial Bse:	34	95	83	11	118	15	16	1593	56	92	740	19
Added Vol:	0	0	0	0	0	0	0	0	0	0	0	0
Committed P:	0	0	0	0	0	0	0	0	0	0	0	0
Initial Fut:	34	95	83	11	118	15	16	1593	56	92	740	19
User Adj:	1.00	1.00	1.00	1.00	1.00	1.00	1.00	1.00	1.00	1.00	1.00	1.00
PHF Adj:	1.00	1.00	1.00	1.00	1.00	1.00	1.00	1.00	1.00	1.00	1.00	1.00
PHF Volume:	34	95	83	11	118	15	16	1593	56	92	740	19
Reduct Vol:	0	0	0	0	0	0	0	0	0	0	0	0
Reduced Vol:	34	95	83	11	118	15	16	1593	56	92	740	19
PCE Adj:	1.00	1.00	1.00	1.00	1.00	1.00	1.00	1.00	1.00	1.00	1.00	1.00
MLF Adj:	1.00	1.00	1.00	1.00	1.00	1.00	1.00	1.00	1.00	1.00	1.00	1.00
FinalVolume:	34	95	83	11	118	15	16	1593	56	92	740	19
Saturation Flow Module:												
Sat/Lane:	1600	1600	1600	1600	1600	1600	1600	1600	1600	1600	1600	1600
Adjustment:	1.00	1.00	1.00	1.00	1.00	1.00	1.00	1.00	1.00	1.00	1.00	1.00
Lanes:	1.00	0.54	0.46	1.00	0.89	0.11	1.00	2.00	1.00	1.00	2.00	1.00
Final Sat.:	1600	858	742	1600	1419	181	1600	3200	1600	1600	3200	1600
Capacity Analysis Module:												
Vol/Sat:	0.02	0.11	0.11	0.01	0.08	0.08	0.01	0.50	0.03	0.06	0.23	0.01
Crit Moves:		****		****				****		****		

Newport Banning Ranch
Year 2016 with Project - TPO Analysis
AM Peak Hour

Level Of Service Computation Report
ICU 1(Loss as Cycle Length %) Method (Future Volume Alternative)

Intersection #24 Harbor Blvd/Victoria St

Cycle (sec):	100	Critical Vol./Cap.(X):	0.756
Loss Time (sec):	0 (Y+R=4.0 sec)	Average Delay (sec/veh):	xxxxxx
Optimal Cycle:	93	Level Of Service:	C

Street Name:	Harbor Boulevard						Victoria Street					
Approach:	North Bound			South Bound			East Bound			West Bound		
Movement:	L - T - R			L - T - R			L - T - R			L - T - R		
Control:	Protected			Protected			Protected			Protected		
Rights:	Include			Ovl			Include			Include		
Min. Green:	0	0	0	0	0	0	0	0	0	0	0	0
Lanes:	1 0 3 0 1			1 0 3 0 1			2 0 1 1 0			2 0 2 0 1		
Volume Module:												
Base Vol:	60	615	90	119	933	166	248	1272	89	135	623	109
Growth Adj:	1.07	1.07	1.07	1.07	1.07	1.07	1.07	1.07	1.07	1.07	1.07	1.07
Initial Bse:	64	659	96	128	1000	178	266	1364	95	145	668	117
Added Vol:	0	77	0	0	29	0	0	0	0	0	0	0
Committed P:	0	0	0	0	0	0	0	0	0	0	0	0
Initial Fut:	64	736	96	128	1029	178	266	1364	95	145	668	117
User Adj:	1.00	1.00	1.00	1.00	1.00	1.00	1.00	1.00	1.00	1.00	1.00	1.00
PHF Adj:	1.00	1.00	1.00	1.00	1.00	1.00	1.00	1.00	1.00	1.00	1.00	1.00
PHF Volume:	64	736	96	128	1029	178	266	1364	95	145	668	117
Reduct Vol:	0	0	0	0	0	0	0	0	0	0	0	0
Reduced Vol:	64	736	96	128	1029	178	266	1364	95	145	668	117
PCE Adj:	1.00	1.00	1.00	1.00	1.00	1.00	1.00	1.00	1.00	1.00	1.00	1.00
MLF Adj:	1.00	1.00	1.00	1.00	1.00	1.00	1.00	1.00	1.00	1.00	1.00	1.00
FinalVolume:	64	736	96	128	1029	178	266	1364	95	145	668	117
OvlAdjVol:						45						
Saturation Flow Module:												
Sat/Lane:	1600	1600	1600	1600	1600	1600	1600	1600	1600	1600	1600	1600
Adjustment:	1.00	1.00	1.00	1.00	1.00	1.00	1.00	1.00	1.00	1.00	1.00	1.00
Lanes:	1.00	3.00	1.00	1.00	3.00	1.00	2.00	1.87	0.13	2.00	2.00	1.00
Final Sat.:	1600	4800	1600	1600	4800	1600	3200	2991	209	3200	3200	1600
Capacity Analysis Module:												
Vol/Sat:	0.04	0.15	0.06	0.08	0.21	0.11	0.08	0.46	0.46	0.05	0.21	0.07
OvlAdjV/S:						0.03						
Crit Moves:	****				****			****		****		

Newport Banning Ranch
Year 2016 with Project - TPO Analysis
AM Peak Hour

Level Of Service Computation Report
ICU 1(Loss as Cycle Length %) Method (Future Volume Alternative)

Intersection #25 Newport Blvd/Victoria St [Ramp]

Cycle (sec):	120	Critical Vol./Cap.(X):	0.591
Loss Time (sec):	0 (Y+R=4.0 sec)	Average Delay (sec/veh):	xxxxxx
Optimal Cycle:	46	Level Of Service:	A

Street Name:	Newport Boulevard									Victoria Street								
Approach:	North Bound					South Bound				East Bound					West Bound			
Movement:	L	-	T	-	R	L	-	T	- R	L	-	T	-	R	L	-	T	- R
Control:	Permitted					Permitted				Protected					Protected			
Rights:	Include					Ignore				Include					Include			
Min. Green:	0	0	0	0	0	0	0	0		0	0	0	0		0	0	0	
Lanes:	0	0	0	0	0	1	1	2	0 1	0	0	2	1	0	1	0	1	0 0
Volume Module:																		
Base Vol:	0	0	0	304	706	749				0	1629	30			77	279	0	
Growth Adj:	1.07	1.07	1.07	1.07	1.07	1.07				1.07	1.07	1.07			1.07	1.07	1.07	
Initial Bse:	0	0	0	326	757	803				0	1746	32			83	299	0	
Added Vol:	0	0	0	0	0	0				0	0	0			0	0	0	
Committed P:	0	0	0	0	0	0				0	0	0			0	0	0	
Initial Fut:	0	0	0	326	757	803				0	1746	32			83	299	0	
User Adj:	1.00	1.00	1.00	1.00	1.00	0.00				1.00	1.00	1.00			1.00	1.00	1.00	
PHF Adj:	1.00	1.00	1.00	1.00	1.00	0.00				1.00	1.00	1.00			1.00	1.00	1.00	
PHF Volume:	0	0	0	326	757	0				0	1746	32			83	299	0	
Reduct Vol:	0	0	0	0	0	0				0	0	0			0	0	0	
Reduced Vol:	0	0	0	326	757	0				0	1746	32			83	299	0	
PCE Adj:	1.00	1.00	1.00	1.00	1.00	0.00				1.00	1.00	1.00			1.00	1.00	1.00	
MLF Adj:	1.00	1.00	1.00	1.00	1.00	0.00				1.00	1.00	1.00			1.00	1.00	1.00	
FinalVolume:	0	0	0	326	757	0				0	1746	32			83	299	0	
Saturation Flow Module:																		
Sat/Lane:	1600	1600	1600	1600	1600	1600				1600	1600	1600			1600	1600	1600	
Adjustment:	1.00	1.00	1.00	1.00	1.00	1.00				1.00	1.00	1.00			1.00	1.00	1.00	
Lanes:	0.00	0.00	0.00	1.20	2.80	1.00				0.00	2.95	0.05			1.00	1.00	0.00	
Final Sat.:	0	0	0	1926	4474	1600				0	4713	87			1600	1600	0	
Capacity Analysis Module:																		
Vol/Sat:	0.00	0.00	0.00	0.17	0.17	0.00				0.00	0.37	0.37			0.05	0.19	0.00	
Crit Moves:				****							****				****			

Newport Banning Ranch
Year 2016 with Project - TPO Analysis
AM Peak Hour

Level Of Service Computation Report
ICU 1(Loss as Cycle Length %) Method (Future Volume Alternative)

Intersection #26 Newport Blvd /Victoria St (22nd St) [Ramp]

Cycle (sec):	120	Critical Vol./Cap.(X):	1.033
Loss Time (sec):	0 (Y+R=4.0 sec)	Average Delay (sec/veh):	xxxxxx
Optimal Cycle:	180	Level Of Service:	F

Street Name:	Newport Boulevard						Victoria Street (22nd Street)					
Approach:	North Bound			South Bound			East Bound			West Bound		
Movement:	L - T - R			L - T - R			L - T - R			L - T - R		
Control:	Permitted			Permitted			Protected			Protected		
Rights:	Include			Include			Include			Include		
Min. Green:	0	0	0	0	0	0	0	0	0	0	0	0
Lanes:	0 1	2 0	1	0 0	0 0	0	2 0	2 0	0	0 0	1 0	1
Volume Module:												
Base Vol:	87	1212	32	0	0	0	1587	316	0	0	266	316
Growth Adj:	1.07	1.07	1.07	1.07	1.07	1.07	1.07	1.07	1.07	1.07	1.07	1.07
Initial Bse:	93	1299	34	0	0	0	1701	339	0	0	285	339
Added Vol:	0	0	0	0	0	0	0	0	0	0	0	0
Committed P:	0	0	0	0	0	0	0	0	0	0	0	0
Initial Fut:	93	1299	34	0	0	0	1701	339	0	0	285	339
User Adj:	1.00	1.00	1.00	1.00	1.00	1.00	1.00	1.00	1.00	1.00	1.00	1.00
PHF Adj:	1.00	1.00	1.00	1.00	1.00	1.00	1.00	1.00	1.00	1.00	1.00	1.00
PHF Volume:	93	1299	34	0	0	0	1701	339	0	0	285	339
Reduct Vol:	0	0	0	0	0	0	0	0	0	0	0	0
Reduced Vol:	93	1299	34	0	0	0	1701	339	0	0	285	339
PCE Adj:	1.00	1.00	1.00	1.00	1.00	1.00	1.00	1.00	1.00	1.00	1.00	1.00
MLF Adj:	1.00	1.00	1.00	1.00	1.00	1.00	1.00	1.00	1.00	1.00	1.00	1.00
FinalVolume:	93	1299	34	0	0	0	1701	339	0	0	285	339
Saturation Flow Module:												
Sat/Lane:	1600	1600	1600	1600	1600	1600	1600	1600	1600	1600	1600	1600
Adjustment:	1.00	1.00	1.00	1.00	1.00	1.00	1.00	1.00	1.00	1.00	1.00	1.00
Lanes:	0.20	2.80	1.00	0.00	0.00	0.00	2.00	2.00	0.00	0.00	1.00	1.00
Final Sat.:	321	4479	1600	0	0	0	3200	3200	0	0	1600	1600
Capacity Analysis Module:												
Vol/Sat:	0.06	0.29	0.02	0.00	0.00	0.00	0.53	0.11	0.00	0.00	0.18	0.21
Crit Moves:		****					****					****

Newport Banning Ranch
Year 2016 with Project - TPO Analysis
AM Peak Hour

Level Of Service Computation Report
2000 HCM 4-Way Stop Method (Future Volume Alternative)

Intersection #27 Whittier Ave/19th St

Cycle (sec):	100	Critical Vol./Cap.(X):	0.403
Loss Time (sec):	0 (Y+R=4.0 sec)	Average Delay (sec/veh):	11.1
Optimal Cycle:	0	Level Of Service:	B

Street Name:	Whittier Avenue						19th St					
Approach:	North Bound			South Bound			East Bound			West Bound		
Movement:	L -	T -	R	L -	T -	R	L -	T -	R	L -	T -	R
Control:	Stop Sign			Stop Sign			Stop Sign			Stop Sign		
Rights:	Include			Include			Include			Include		
Min. Green:	0	0	0	0	0	0	0	0	0	0	0	0
Lanes:	0 0	1! 0	0	0 1	0 0	0	1 0	0 1	0	1 0	0 1	0
Volume Module:												
Base Vol:	5	6	258	10	6	0	1	123	7	210	29	10
Growth Adj:	1.07	1.07	1.07	1.07	1.07	1.07	1.07	1.07	1.07	1.07	1.07	1.07
Initial Bse:	5	6	277	11	6	0	1	132	8	225	31	11
Added Vol:	0	0	0	0	0	0	0	97	0	0	29	0
Committed P:	0	0	0	0	0	0	0	0	0	0	0	0
Initial Fut:	5	6	277	11	6	0	1	229	8	225	60	11
User Adj:	1.00	1.00	1.00	1.00	1.00	1.00	1.00	1.00	1.00	1.00	1.00	1.00
PHF Adj:	1.00	1.00	1.00	1.00	1.00	1.00	1.00	1.00	1.00	1.00	1.00	1.00
PHF Volume:	5	6	277	11	6	0	1	229	8	225	60	11
Reduct Vol:	0	0	0	0	0	0	0	0	0	0	0	0
Reduced Vol:	5	6	277	11	6	0	1	229	8	225	60	11
PCE Adj:	1.00	1.00	1.00	1.00	1.00	1.00	1.00	1.00	1.00	1.00	1.00	1.00
MLF Adj:	1.00	1.00	1.00	1.00	1.00	1.00	1.00	1.00	1.00	1.00	1.00	1.00
FinalVolume:	5	6	277	11	6	0	1	229	8	225	60	11
Saturation Flow Module:												
Adjustment:	1.00	1.00	1.00	1.00	1.00	1.00	1.00	1.00	1.00	1.00	1.00	1.00
Lanes:	0.02	0.02	0.96	0.62	0.38	0.00	1.00	0.97	0.03	1.00	0.85	0.15
Final Sat.:	13	16	686	344	206	0	567	600	20	579	543	97
Capacity Analysis Module:												
Vol/Sat:	0.40	0.40	0.40	0.03	0.03	xxxx	0.00	0.38	0.38	0.39	0.11	0.11
Crit Moves:	****				****			****		****		
Delay/Veh:	10.6	10.6	10.6	9.0	9.0	0.0	8.8	11.5	11.5	12.3	8.8	8.8
Delay Adj:	1.00	1.00	1.00	1.00	1.00	1.00	1.00	1.00	1.00	1.00	1.00	1.00
AdjDel/Veh:	10.6	10.6	10.6	9.0	9.0	0.0	8.8	11.5	11.5	12.3	8.8	8.8
LOS by Move:	B	B	B	A	A	*	A	B	B	B	A	A
ApproachDel:	10.6			9.0			11.5			11.5		
Delay Adj:	1.00			1.00			1.00			1.00		
ApprAdjDel:	10.6			9.0			11.5			11.5		
LOS by Appr:	B			A			B			B		
AllWayAvgQ:	0.6	0.6	0.6	0.0	0.0	0.0	0.0	0.5	0.5	0.6	0.1	0.1

Newport Banning Ranch
Year 2016 with Project - TPO Analysis
AM Peak Hour

Note: Queue reported is the number of cars per lane.

Newport Banning Ranch
Year 2016 with Project - TPO Analysis
AM Peak Hour

Level Of Service Computation Report
2000 HCM 4-Way Stop Method (Future Volume Alternative)

Intersection #28 Monrovia Ave/19th St

Cycle (sec):	100	Critical Vol./Cap.(X):	1.019
Loss Time (sec):	0 (Y+R=4.0 sec)	Average Delay (sec/veh):	36.4
Optimal Cycle:	0	Level Of Service:	E

Street Name:	Monrovia Avenue						19th Street					
Approach:	North Bound			South Bound			East Bound			West Bound		
Movement:	L -	T -	R	L -	T -	R	L -	T -	R	L -	T -	R
Control:	Stop Sign			Stop Sign			Stop Sign			Stop Sign		
Rights:	Include			Include			Include			Include		
Min. Green:	0	0	0	0	0	0	0	0	0	0	0	0
Lanes:	0 1	0 0	1	0 0	1! 0	0	1 0	1 0	1	1 0	1 0	1
Volume Module:												
Base Vol:	31	10	162	79	19	1	4	403	34	154	213	30
Growth Adj:	1.07	1.07	1.07	1.07	1.07	1.07	1.07	1.07	1.07	1.07	1.07	1.07
Initial Bse:	33	11	174	85	20	1	4	432	36	165	228	32
Added Vol:	0	0	0	0	0	0	0	97	0	0	29	0
Committed P:	0	0	0	0	0	0	0	0	0	0	0	0
Initial Fut:	33	11	174	85	20	1	4	529	36	165	257	32
User Adj:	1.00	1.00	1.00	1.00	1.00	1.00	1.00	1.00	1.00	1.00	1.00	1.00
PHF Adj:	1.00	1.00	1.00	1.00	1.00	1.00	1.00	1.00	1.00	1.00	1.00	1.00
PHF Volume:	33	11	174	85	20	1	4	529	36	165	257	32
Reduct Vol:	0	0	0	0	0	0	0	0	0	0	0	0
Reduced Vol:	33	11	174	85	20	1	4	529	36	165	257	32
PCE Adj:	1.00	1.00	1.00	1.00	1.00	1.00	1.00	1.00	1.00	1.00	1.00	1.00
MLF Adj:	1.00	1.00	1.00	1.00	1.00	1.00	1.00	1.00	1.00	1.00	1.00	1.00
FinalVolume:	33	11	174	85	20	1	4	529	36	165	257	32
Saturation Flow Module:												
Adjustment:	1.00	1.00	1.00	1.00	1.00	1.00	1.00	1.00	1.00	1.00	1.00	1.00
Lanes:	0.76	0.24	1.00	0.80	0.19	0.01	1.00	1.00	1.00	1.00	1.00	1.00
Final Sat.:	335	108	511	345	83	4	473	519	563	460	491	542
Capacity Analysis Module:												
Vol/Sat:	0.10	0.10	0.34	0.25	0.25	0.25	0.01	1.02	0.06	0.36	0.52	0.06
Crit Moves:			****	****				****			****	
Delay/Veh:	11.5	11.5	12.9	13.5	13.5	13.5	10.2	70.5	9.4	14.6	17.5	9.6
Delay Adj:	1.00	1.00	1.00	1.00	1.00	1.00	1.00	1.00	1.00	1.00	1.00	1.00
AdjDel/Veh:	11.5	11.5	12.9	13.5	13.5	13.5	10.2	70.5	9.4	14.6	17.5	9.6
LOS by Move:	B	B	B	B	B	B	B	F	A	B	C	A
ApproachDel:	12.6			13.5			66.1			15.9		
Delay Adj:	1.00			1.00			1.00			1.00		
ApprAdjDel:	12.6			13.5			66.1			15.9		
LOS by Appr:	B			B			F			C		
AllWayAvgQ:	0.1	0.1	0.5	0.3	0.3	0.3	0.0	8.8	0.1	0.5	1.0	0.1

Newport Banning Ranch
Year 2016 with Project - TPO Analysis
AM Peak Hour

Note: Queue reported is the number of cars per lane.

Newport Banning Ranch
Year 2016 with Project - TPO Analysis
AM Peak Hour

Level Of Service Computation Report
ICU 1(Loss as Cycle Length %) Method (Future Volume Alternative)

Intersection #29 Placentia Ave/19th St

Cycle (sec):	100	Critical Vol./Cap.(X):	0.550
Loss Time (sec):	0 (Y+R=4.0 sec)	Average Delay (sec/veh):	xxxxxx
Optimal Cycle:	51	Level Of Service:	A

Street Name:	Placentia Avenue						19th Street					
Approach:	North Bound			South Bound			East Bound			West Bound		
Movement:	L - T - R			L - T - R			L - T - R			L - T - R		
Control:	Protected			Protected			Protected			Protected		
Rights:	Include			Include			Include			Include		
Min. Green:	0	0	0	0	0	0	0	0	0	0	0	0
Lanes:	1 0 2	0 1		1 0 1	1 0		2 0 1	1 0		2 0 2	0 1	
Volume Module:												
Base Vol:	31	412	217	140	495	115	201	582	33	219	328	165
Growth Adj:	1.07	1.07	1.07	1.07	1.07	1.07	1.07	1.07	1.07	1.07	1.07	1.07
Initial Bse:	33	442	233	150	531	123	215	624	35	235	352	177
Added Vol:	-21	37	0	0	14	1	2	95	-8	0	29	0
Committed P:	0	1	0	0	0	0	0	0	0	0	0	0
Initial Fut:	12	480	233	150	545	124	217	719	27	235	381	177
User Adj:	1.00	1.00	1.00	1.00	1.00	1.00	1.00	1.00	1.00	1.00	1.00	1.00
PHF Adj:	1.00	1.00	1.00	1.00	1.00	1.00	1.00	1.00	1.00	1.00	1.00	1.00
PHF Volume:	12	480	233	150	545	124	217	719	27	235	381	177
Reduct Vol:	0	0	0	0	0	0	0	0	0	0	0	0
Reduced Vol:	12	480	233	150	545	124	217	719	27	235	381	177
PCE Adj:	1.00	1.00	1.00	1.00	1.00	1.00	1.00	1.00	1.00	1.00	1.00	1.00
MLF Adj:	1.00	1.00	1.00	1.00	1.00	1.00	1.00	1.00	1.00	1.00	1.00	1.00
FinalVolume:	12	480	233	150	545	124	217	719	27	235	381	177
Saturation Flow Module:												
Sat/Lane:	1600	1600	1600	1600	1600	1600	1600	1600	1600	1600	1600	1600
Adjustment:	1.00	1.00	1.00	1.00	1.00	1.00	1.00	1.00	1.00	1.00	1.00	1.00
Lanes:	1.00	2.00	1.00	1.00	1.63	0.37	2.00	1.93	0.07	2.00	2.00	1.00
Final Sat.:	1600	3200	1600	1600	2605	595	3200	3083	117	3200	3200	1600
Capacity Analysis Module:												
Vol/Sat:	0.01	0.15	0.15	0.09	0.21	0.21	0.07	0.23	0.23	0.07	0.12	0.11
Crit Moves:		****		****				****		****		

Newport Banning Ranch
Year 2016 with Project - TPO Analysis
AM Peak Hour

Level Of Service Computation Report
ICU 1(Loss as Cycle Length %) Method (Future Volume Alternative)

Intersection #30 Pomona Ave/19th St

Cycle (sec):	100	Critical Vol./Cap.(X):	0.529
Loss Time (sec):	0 (Y+R=4.0 sec)	Average Delay (sec/veh):	xxxxxx
Optimal Cycle:	48	Level Of Service:	A

Street Name:	Pomona Avenue						19th Street					
Approach:	North Bound			South Bound			East Bound			West Bound		
Movement:	L - T - R			L - T - R			L - T - R			L - T - R		
Control:	Protected			Protected			Prot+Permit			Prot+Permit		
Rights:	Include			Include			Include			Include		
Min. Green:	0	0	0	0	0	0	0	0	0	0	0	0
Lanes:	1 0 0 1 0			1 0 0 1 0			1 0 1 1 0			1 0 1 1 0		
Volume Module:												
Base Vol:	36	75	71	52	94	36	38	847	39	104	615	26
Growth Adj:	1.07	1.07	1.07	1.07	1.07	1.07	1.07	1.07	1.07	1.07	1.07	1.07
Initial Bse:	39	80	76	56	101	39	41	908	42	111	659	28
Added Vol:	0	0	0	0	0	0	0	96	0	0	29	0
Committed P:	0	0	0	0	0	0	0	0	0	0	0	0
Initial Fut:	39	80	76	56	101	39	41	1004	42	111	688	28
User Adj:	1.00	1.00	1.00	1.00	1.00	1.00	1.00	1.00	1.00	1.00	1.00	1.00
PHF Adj:	1.00	1.00	1.00	1.00	1.00	1.00	1.00	1.00	1.00	1.00	1.00	1.00
PHF Volume:	39	80	76	56	101	39	41	1004	42	111	688	28
Reduct Vol:	0	0	0	0	0	0	0	0	0	0	0	0
Reduced Vol:	39	80	76	56	101	39	41	1004	42	111	688	28
PCE Adj:	1.00	1.00	1.00	1.00	1.00	1.00	1.00	1.00	1.00	1.00	1.00	1.00
MLF Adj:	1.00	1.00	1.00	1.00	1.00	1.00	1.00	1.00	1.00	1.00	1.00	1.00
FinalVolume:	39	80	76	56	101	39	41	1004	42	111	688	28
Saturation Flow Module:												
Sat/Lane:	1600	1600	1600	1600	1600	1600	1600	1600	1600	1600	1600	1600
Adjustment:	1.00	1.00	1.00	1.00	1.00	1.00	1.00	1.00	1.00	1.00	1.00	1.00
Lanes:	1.00	0.51	0.49	1.00	0.72	0.28	1.00	1.92	0.08	1.00	1.92	0.08
Final Sat.:	1600	822	778	1600	1157	443	1600	3072	128	1600	3075	125
Capacity Analysis Module:												
Vol/Sat:	0.02	0.10	0.10	0.03	0.09	0.09	0.03	0.33	0.33	0.07	0.22	0.22
Crit Moves:		****		****				****		****		

Newport Banning Ranch
Year 2016 with Project - TPO Analysis
AM Peak Hour

Level Of Service Computation Report
ICU 1(Loss as Cycle Length %) Method (Future Volume Alternative)

Intersection #31 Anaheim Ave/19th St

Cycle (sec):	100	Critical Vol./Cap.(X):	0.531
Loss Time (sec):	0 (Y+R=4.0 sec)	Average Delay (sec/veh):	xxxxxx
Optimal Cycle:	40	Level Of Service:	A

Street Name:	Anaheim Avenue						19th Street					
Approach:	North Bound			South Bound			East Bound			West Bound		
Movement:	L - T - R			L - T - R			L - T - R			L - T - R		
Control:	Permitted			Permitted			Prot+Permit			Prot+Permit		
Rights:	Include			Include			Include			Include		
Min. Green:	0	0	0	0	0	0	0	0	0	0	0	0
Lanes:	1 0 0	1 0		0 1 0	1 0		0 1 0	1 0		1 1 0	1 0	
Volume Module:												
Base Vol:	27	26	88	41	41	23	24	961	18	103	724	33
Growth Adj:	1.07	1.07	1.07	1.07	1.07	1.07	1.07	1.07	1.07	1.07	1.07	1.07
Initial Bse:	29	28	94	44	44	25	26	1030	19	110	776	35
Added Vol:	0	0	0	0	0	0	0	96	0	0	30	0
Committed P:	0	0	0	0	0	0	0	0	0	0	0	0
Initial Fut:	29	28	94	44	44	25	26	1126	19	110	806	35
User Adj:	1.00	1.00	1.00	1.00	1.00	1.00	1.00	1.00	1.00	1.00	1.00	1.00
PHF Adj:	1.00	1.00	1.00	1.00	1.00	1.00	1.00	1.00	1.00	1.00	1.00	1.00
PHF Volume:	29	28	94	44	44	25	26	1126	19	110	806	35
Reduct Vol:	0	0	0	0	0	0	0	0	0	0	0	0
Reduced Vol:	29	28	94	44	44	25	26	1126	19	110	806	35
PCE Adj:	1.00	1.00	1.00	1.00	1.00	1.00	1.00	1.00	1.00	1.00	1.00	1.00
MLF Adj:	1.00	1.00	1.00	1.00	1.00	1.00	1.00	1.00	1.00	1.00	1.00	1.00
FinalVolume:	29	28	94	44	44	25	26	1126	19	110	806	35
Saturation Flow Module:												
Sat/Lane:	1600	1600	1600	1600	1600	1600	1600	1600	1600	1600	1600	1600
Adjustment:	1.00	1.00	1.00	1.00	1.00	1.00	1.00	1.00	1.00	1.00	1.00	1.00
Lanes:	1.00	0.23	0.77	1.00	0.64	0.36	1.00	1.97	0.03	1.00	2.00	1.00
Final Sat.:	1600	365	1235	1600	1025	575	1600	3146	54	1600	3200	1600
Capacity Analysis Module:												
Vol/Sat:	0.02	0.08	0.08	0.03	0.04	0.04	0.02	0.36	0.36	0.07	0.25	0.02
Crit Moves:		****		****				****		****		

Newport Banning Ranch
Year 2016 with Project - TPO Analysis
AM Peak Hour

Level Of Service Computation Report
ICU 1(Loss as Cycle Length %) Method (Future Volume Alternative)

Intersection #32 Park Ave/19th St

Cycle (sec):	100	Critical Vol./Cap.(X):	0.504
Loss Time (sec):	0 (Y+R=4.0 sec)	Average Delay (sec/veh):	xxxxxx
Optimal Cycle:	38	Level Of Service:	A

Street Name:	Park Avenue						19th St					
Approach:	North Bound			South Bound			East Bound			West Bound		
Movement:	L - T - R			L - T - R			L - T - R			L - T - R		
Control:	Permitted			Permitted			Prot+Permit			Prot+Permit		
Rights:	Include			Include			Include			Include		
Min. Green:	0	0	0	0	0	0	0	0	0	0	0	0
Lanes:	2 0 0 0 1			0 0 0 0 0			1 0 2 0 1			1 0 3 0 0		
Volume Module:												
Base Vol:	43	0	108	0	0	0	6	1012	60	94	800	0
Growth Adj:	1.07	1.07	1.07	1.07	1.07	1.07	1.07	1.07	1.07	1.07	1.07	1.07
Initial Bse:	46	0	116	0	0	0	6	1085	64	101	858	0
Added Vol:	0	0	0	0	0	0	0	95	0	0	29	0
Committed P:	0	0	0	0	0	0	0	0	0	0	0	0
Initial Fut:	46	0	116	0	0	0	6	1180	64	101	887	0
User Adj:	1.00	1.00	1.00	1.00	1.00	1.00	1.00	1.00	1.00	1.00	1.00	1.00
PHF Adj:	1.00	1.00	1.00	1.00	1.00	1.00	1.00	1.00	1.00	1.00	1.00	1.00
PHF Volume:	46	0	116	0	0	0	6	1180	64	101	887	0
Reduct Vol:	0	0	0	0	0	0	0	0	0	0	0	0
Reduced Vol:	46	0	116	0	0	0	6	1180	64	101	887	0
PCE Adj:	1.00	1.00	1.00	1.00	1.00	1.00	1.00	1.00	1.00	1.00	1.00	1.00
MLF Adj:	1.00	1.00	1.00	1.00	1.00	1.00	1.00	1.00	1.00	1.00	1.00	1.00
FinalVolume:	46	0	116	0	0	0	6	1180	64	101	887	0
Saturation Flow Module:												
Sat/Lane:	1600	1600	1600	1600	1600	1600	1600	1600	1600	1600	1600	1600
Adjustment:	1.00	1.00	1.00	1.00	1.00	1.00	1.00	1.00	1.00	1.00	1.00	1.00
Lanes:	2.00	0.00	1.00	0.00	0.00	0.00	1.00	2.00	1.00	1.00	3.00	0.00
Final Sat.:	3200	0	1600	0	0	0	1600	3200	1600	1600	4800	0
Capacity Analysis Module:												
Vol/Sat:	0.01	0.00	0.07	0.00	0.00	0.00	0.00	0.37	0.04	0.06	0.18	0.00
Crit Moves:			****					****		****		

Newport Banning Ranch
Year 2016 with Project - TPO Analysis
AM Peak Hour

Level Of Service Computation Report
ICU 1(Loss as Cycle Length %) Method (Future Volume Alternative)

Intersection #33 Harbor Blvd/19th St

Cycle (sec):	100	Critical Vol./Cap.(X):	0.448
Loss Time (sec):	0 (Y+R=4.0 sec)	Average Delay (sec/veh):	xxxxxx
Optimal Cycle:	41	Level Of Service:	A

Street Name:	Harbor Boulevard						19th Street					
Approach:	North Bound			South Bound			East Bound			West Bound		
Movement:	L - T - R			L - T - R			L - T - R			L - T - R		
Control:	Protected			Protected			Protected			Protected		
Rights:	Include			Include			Include			Include		
Min. Green:	0	0	0	0	0	0	0	0	0	0	0	0
Lanes:	1 0 2	1 0		1 0 2	0 1		2 0 2	1 0		1 0 3	0 1	
Volume Module:												
Base Vol:	18	287	14	141	425	260	216	928	37	36	630	161
Growth Adj:	1.07	1.07	1.07	1.07	1.07	1.07	1.07	1.07	1.07	1.07	1.07	1.07
Initial Bse:	19	308	15	151	456	279	232	995	40	39	675	173
Added Vol:	0	43	0	0	18	11	34	62	0	0	18	0
Committed P:	3	5	0	0	6	0	0	0	2	0	0	0
Initial Fut:	22	356	15	151	480	290	266	1057	42	39	693	173
User Adj:	1.00	1.00	1.00	1.00	1.00	1.00	1.00	1.00	1.00	1.00	1.00	1.00
PHF Adj:	1.00	1.00	1.00	1.00	1.00	1.00	1.00	1.00	1.00	1.00	1.00	1.00
PHF Volume:	22	356	15	151	480	290	266	1057	42	39	693	173
Reduct Vol:	0	0	0	0	0	0	0	0	0	0	0	0
Reduced Vol:	22	356	15	151	480	290	266	1057	42	39	693	173
PCE Adj:	1.00	1.00	1.00	1.00	1.00	1.00	1.00	1.00	1.00	1.00	1.00	1.00
MLF Adj:	1.00	1.00	1.00	1.00	1.00	1.00	1.00	1.00	1.00	1.00	1.00	1.00
FinalVolume:	22	356	15	151	480	290	266	1057	42	39	693	173
Saturation Flow Module:												
Sat/Lane:	1600	1600	1600	1600	1600	1600	1600	1600	1600	1600	1600	1600
Adjustment:	1.00	1.00	1.00	1.00	1.00	1.00	1.00	1.00	1.00	1.00	1.00	1.00
Lanes:	1.00	2.88	0.12	1.00	2.00	1.00	2.00	2.89	0.11	1.00	3.00	1.00
Final Sat.:	1600	4606	194	1600	3200	1600	3200	4618	182	1600	4800	1600
Capacity Analysis Module:												
Vol/Sat:	0.01	0.08	0.08	0.09	0.15	0.18	0.08	0.23	0.23	0.02	0.14	0.11
Crit Moves:	****					****		****		****		

Newport Banning Ranch
Year 2016 with Project - TPO Analysis
AM Peak Hour

Level Of Service Computation Report
ICU 1(Loss as Cycle Length %) Method (Future Volume Alternative)

Intersection #34 Newport Blvd/19th St

Cycle (sec):	120	Critical Vol./Cap.(X):	0.907
Loss Time (sec):	0 (Y+R=4.0 sec)	Average Delay (sec/veh):	xxxxxx
Optimal Cycle:	180	Level Of Service:	E

Street Name:	Newport Boulevard									19th Street								
Approach:	North Bound					South Bound				East Bound					West Bound			
Movement:	L	-	T	-	R	L	-	T	-	R	L	-	T	-	R	L	-	T	-	R
Control:	Protected					Protected					Split Phase					Split Phase				
Rights:	Include					Include					Include					Include				
Min. Green:	0	0	0			0	0	0			0	0	0			0	0	0		
Lanes:	1	0	3	1	0	1	0	3	1	1	2	1	1	0	1	1	0	2	1	1
Volume Module:																				
Base Vol:	31	2709		9		181	2440		486		886	183		14		21	162		237	
Growth Adj:	1.07	1.07		1.07		1.07	1.07		1.07		1.07	1.07		1.07		1.07	1.07		1.07	
Initial Bse:	33	2904		10		194	2616		521		950	196		15		23	174		254	
Added Vol:	0	242		0		0	93		18		62	0		0		0	0		0	
Committed P:	0	12		1		0	9		0		0	0		2		0	0		0	
Initial Fut:	33	3158		11		194	2718		539		1012	196		17		23	174		254	
User Adj:	1.00	1.00		1.00		1.00	1.00		1.00		1.00	1.00		1.00		1.00	1.00		1.00	
PHF Adj:	1.00	1.00		1.00		1.00	1.00		1.00		1.00	1.00		1.00		1.00	1.00		1.00	
PHF Volume:	33	3158		11		194	2718		539		1012	196		17		23	174		254	
Reduct Vol:	0	0		0		0	0		0		0	0		0		0	0		0	
Reduced Vol:	33	3158		11		194	2718		539		1012	196		17		23	174		254	
PCE Adj:	1.00	1.00		1.00		1.00	1.00		1.00		1.00	1.00		1.00		1.00	1.00		1.00	
MLF Adj:	1.00	1.00		1.00		1.00	1.00		1.00		1.00	1.00		1.00		1.00	1.00		1.00	
FinalVolume:	33	3158		11		194	2718		539		1012	196		17		23	174		254	
Saturation Flow Module:																				
Sat/Lane:	1600	1600		1600		1600	1600		1600		1600	1600		1600		1600	1600		1600	
Adjustment:	1.00	1.00		1.00		1.00	1.00		1.00		1.00	1.00		1.00		1.00	1.00		1.00	
Lanes:	1.00	3.99		0.01		1.00	4.00		1.00		3.00	1.00		1.00		1.00	2.00		2.00	
Final Sat.:	1600	6378		22		1600	6400		1600		4800	1600		1600		1600	3200		3200	
Capacity Analysis Module:																				
Vol/Sat:	0.02	0.50		0.50		0.12	0.42		0.34		0.21	0.12		0.01		0.01	0.05		0.08	
Crit Moves:		****				****					****								****	

Newport Banning Ranch
Year 2016 with Project - TPO Analysis
AM Peak Hour

Level Of Service Computation Report
ICU 1(Loss as Cycle Length %) Method (Future Volume Alternative)

Intersection #35 Newport Blvd/Broadway

Cycle (sec):	120	Critical Vol./Cap.(X):	0.640
Loss Time (sec):	0 (Y+R=4.0 sec)	Average Delay (sec/veh):	xxxxxx
Optimal Cycle:	52	Level Of Service:	B

Street Name:	Newport Boulevard									Broadway								
Approach:	North Bound			South Bound			East Bound			West Bound		
Movement:	L	- T	- R	L	- T	- R	L	- T	- R	L	- T	- R
Control:	Protected			Protected			Permitted			Permitted		
Rights:	Include			Include			Include			Include		
Min. Green:	0	0	0	0	0	0	0	0	0	0	0	0
Lanes:	1 0	3 1	0	1 0	3 0	1	0 1	0 0	1	1 0	0 1	0
Volume Module:												
Base Vol:	4	2678	8	60	2396	7	6	9	3	38	12	102
Growth Adj:	1.07	1.07	1.07	1.07	1.07	1.07	1.07	1.07	1.07	1.07	1.07	1.07
Initial Bse:	4	2871	9	64	2569	8	6	10	3	41	13	109
Added Vol:	0	242	0	0	93	0	0	0	0	0	0	0
Committed P:	0	14	1	0	12	0	0	0	0	0	0	0
Initial Fut:	4	3127	10	64	2674	8	6	10	3	41	13	109
User Adj:	1.00	1.00	1.00	1.00	1.00	1.00	1.00	1.00	1.00	1.00	1.00	1.00
PHF Adj:	1.00	1.00	1.00	1.00	1.00	1.00	1.00	1.00	1.00	1.00	1.00	1.00
PHF Volume:	4	3127	10	64	2674	8	6	10	3	41	13	109
Reduct Vol:	0	0	0	0	0	0	0	0	0	0	0	0
Reduced Vol:	4	3127	10	64	2674	8	6	10	3	41	13	109
PCE Adj:	1.00	1.00	1.00	1.00	1.00	1.00	1.00	1.00	1.00	1.00	1.00	1.00
MLF Adj:	1.00	1.00	1.00	1.00	1.00	1.00	1.00	1.00	1.00	1.00	1.00	1.00
FinalVolume:	4	3127	10	64	2674	8	6	10	3	41	13	109
Saturation Flow Module:												
Sat/Lane:	1600	1600	1600	1600	1600	1600	1600	1600	1600	1600	1600	1600
Adjustment:	1.00	1.00	1.00	1.00	1.00	1.00	1.00	1.00	1.00	1.00	1.00	1.00
Lanes:	1.00	3.99	0.01	1.00	3.00	1.00	0.40	0.60	1.00	1.00	0.11	0.89
Final Sat.:	1600	6380	20	1600	4800	1600	640	960	1600	1600	168	1432
Capacity Analysis Module:												
Vol/Sat:	0.00	0.49	0.49	0.04	0.56	0.00	0.00	0.01	0.00	0.03	0.08	0.08
Crit Moves:	****				****		****				****	

Newport Banning Ranch
Year 2016 with Project - TPO Analysis
AM Peak Hour

Level Of Service Computation Report
ICU 1(Loss as Cycle Length %) Method (Future Volume Alternative)

Intersection #36 Newport Blvd/Harbor Blvd

Cycle (sec):	120	Critical Vol./Cap.(X):	0.778
Loss Time (sec):	0 (Y+R=4.0 sec)	Average Delay (sec/veh):	xxxxxx
Optimal Cycle:	102	Level Of Service:	C

Street Name:	Newport Boulevard						Harbor Boulevard					
Approach:	North Bound			South Bound			East Bound			West Bound		
Movement:	L - T - R			L - T - R			L - T - R			L - T - R		
Control:	Protected			Protected			Protected			Protected		
Rights:	Include			Include			Ovl			Include		
Min. Green:	0	0	0	0	0	0	0	0	0	0	0	0
Lanes:	2 0 4 0 0			0 0 2 1 0			1 0 0 0 2			0 0 0 0 0		
Volume Module:												
Base Vol:	317	2653	0	0	2559	49	26	0	486	0	0	0
Growth Adj:	1.07	1.07	1.07	1.07	1.07	1.07	1.07	1.07	1.07	1.07	1.07	1.07
Initial Bse:	340	2844	0	0	2743	53	28	0	521	0	0	0
Added Vol:	43	242	0	0	93	0	0	0	18	0	0	0
Committed P:	13	17	0	0	14	0	0	0	14	0	0	0
Initial Fut:	396	3103	0	0	2850	53	28	0	553	0	0	0
User Adj:	1.00	1.00	1.00	1.00	1.00	1.00	1.00	1.00	1.00	1.00	1.00	1.00
PHF Adj:	1.00	1.00	1.00	1.00	1.00	1.00	1.00	1.00	1.00	1.00	1.00	1.00
PHF Volume:	396	3103	0	0	2850	53	28	0	553	0	0	0
Reduct Vol:	0	0	0	0	0	0	0	0	0	0	0	0
Reduced Vol:	396	3103	0	0	2850	53	28	0	553	0	0	0
PCE Adj:	1.00	1.00	1.00	1.00	1.00	1.00	1.00	1.00	1.00	1.00	1.00	1.00
MLF Adj:	1.00	1.00	1.00	1.00	1.00	1.00	1.00	1.00	1.00	1.00	1.00	1.00
FinalVolume:	396	3103	0	0	2850	53	28	0	553	0	0	0
OvlAdjVol:									157			
Saturation Flow Module:												
Sat/Lane:	1600	1600	1600	1600	1600	1600	1600	1600	1600	1600	1600	1600
Adjustment:	1.00	1.00	1.00	1.00	1.00	1.00	1.00	1.00	1.00	1.00	1.00	1.00
Lanes:	2.00	4.00	0.00	0.00	2.95	0.05	1.00	0.00	2.00	0.00	0.00	0.00
Final Sat.:	3200	6400	0	0	4713	87	1600	0	3200	0	0	0
Capacity Analysis Module:												
Vol/Sat:	0.12	0.48	0.00	0.00	0.60	0.60	0.02	0.00	0.17	0.00	0.00	0.00
OvlAdjV/S:									0.05			
Crit Moves:	****				****				****			

Newport Banning Ranch
Year 2016 with Project - TPO Analysis
AM Peak Hour

Level Of Service Computation Report
ICU 1(Loss as Cycle Length %) Method (Future Volume Alternative)

Intersection #37 Newport Blvd/18th St (Rochester St)

Cycle (sec):	120	Critical Vol./Cap.(X):	0.826
Loss Time (sec):	0 (Y+R=4.0 sec)	Average Delay (sec/veh):	xxxxxx
Optimal Cycle:	131	Level Of Service:	D

Street Name:	Newport Boulevard						18th Street (Rochester Street)					
Approach:	North Bound			South Bound			East Bound			West Bound		
Movement:	L - T - R			L - T - R			L - T - R			L - T - R		
Control:	Protected			Protected			Split Phase			Split Phase		
Rights:	Include			Include			Include			Include		
Min. Green:	0	0	0	0	0	0	0	0	0	0	0	0
Lanes:	1 0 3	1 0		1 0 3	0 1		2 0 1	0 1		1 0 0	1 0	
Volume Module:												
Base Vol:	64	2852	7	85	2743	165	179	81	26	7	68	30
Growth Adj:	1.07	1.07	1.07	1.07	1.07	1.07	1.07	1.07	1.07	1.07	1.07	1.07
Initial Bse:	69	3057	8	91	2940	177	192	87	28	8	73	32
Added Vol:	0	242	0	0	95	16	44	0	0	0	0	0
Committed P:	6	35	0	0	35	0	0	0	15	0	0	0
Initial Fut:	75	3334	8	91	3070	193	236	87	43	8	73	32
User Adj:	1.00	1.00	1.00	1.00	1.00	1.00	1.00	1.00	1.00	1.00	1.00	1.00
PHF Adj:	1.00	1.00	1.00	1.00	1.00	1.00	1.00	1.00	1.00	1.00	1.00	1.00
PHF Volume:	75	3334	8	91	3070	193	236	87	43	8	73	32
Reduct Vol:	0	0	0	0	0	0	0	0	0	0	0	0
Reduced Vol:	75	3334	8	91	3070	193	236	87	43	8	73	32
PCE Adj:	1.00	1.00	1.00	1.00	1.00	1.00	1.00	1.00	1.00	1.00	1.00	1.00
MLF Adj:	1.00	1.00	1.00	1.00	1.00	1.00	1.00	1.00	1.00	1.00	1.00	1.00
FinalVolume:	75	3334	8	91	3070	193	236	87	43	8	73	32
Saturation Flow Module:												
Sat/Lane:	1600	1600	1600	1600	1600	1600	1600	1600	1600	1600	1600	1600
Adjustment:	1.00	1.00	1.00	1.00	1.00	1.00	1.00	1.00	1.00	1.00	1.00	1.00
Lanes:	1.00	3.99	0.01	1.00	3.00	1.00	2.00	1.00	1.00	1.00	0.69	0.31
Final Sat.:	1600	6386	14	1600	4800	1600	3200	1600	1600	1600	1110	490
Capacity Analysis Module:												
Vol/Sat:	0.05	0.52	0.52	0.06	0.64	0.12	0.07	0.05	0.03	0.00	0.07	0.07
Crit Moves:	****				****		****				****	

Newport Banning Ranch
Year 2016 with Project - TPO Analysis
AM Peak Hour

Level Of Service Computation Report
ICU 1(Loss as Cycle Length %) Method (Future Volume Alternative)

Intersection #38 Placentia Ave/18th St

Cycle (sec):	100	Critical Vol./Cap.(X):	0.474
Loss Time (sec):	0 (Y+R=4.0 sec)	Average Delay (sec/veh):	xxxxxx
Optimal Cycle:	35	Level Of Service:	A

Street Name:	Placentia Avenue						18th Street					
Approach:	North Bound			South Bound			East Bound			West Bound		
Movement:	L - T - R			L - T - R			L - T - R			L - T - R		
Control:	Protected			Protected			Permitted			Permitted		
Rights:	Include			Include			Include			Include		
Min. Green:	0	0	0	0	0	0	0	0	0	0	0	0
Lanes:	1 0	1 1	0	1 0	1 1	0	1 0	0 1	0	1 0	0 1	0
Volume Module:												
Base Vol:	25	488	23	38	725	106	46	120	27	41	173	45
Growth Adj:	1.07	1.07	1.07	1.07	1.07	1.07	1.07	1.07	1.07	1.07	1.07	1.07
Initial Bse:	27	523	25	41	777	114	49	129	29	44	185	48
Added Vol:	0	-78	0	0	-27	0	0	44	0	0	16	0
Committed P:	0	4	0	0	0	0	0	0	0	0	0	0
Initial Fut:	27	449	25	41	750	114	49	173	29	44	201	48
User Adj:	1.00	1.00	1.00	1.00	1.00	1.00	1.00	1.00	1.00	1.00	1.00	1.00
PHF Adj:	1.00	1.00	1.00	1.00	1.00	1.00	1.00	1.00	1.00	1.00	1.00	1.00
PHF Volume:	27	449	25	41	750	114	49	173	29	44	201	48
Reduct Vol:	0	0	0	0	0	0	0	0	0	0	0	0
Reduced Vol:	27	449	25	41	750	114	49	173	29	44	201	48
PCE Adj:	1.00	1.00	1.00	1.00	1.00	1.00	1.00	1.00	1.00	1.00	1.00	1.00
MLF Adj:	1.00	1.00	1.00	1.00	1.00	1.00	1.00	1.00	1.00	1.00	1.00	1.00
FinalVolume:	27	449	25	41	750	114	49	173	29	44	201	48
Saturation Flow Module:												
Sat/Lane:	1600	1600	1600	1600	1600	1600	1600	1600	1600	1600	1600	1600
Adjustment:	1.00	1.00	1.00	1.00	1.00	1.00	1.00	1.00	1.00	1.00	1.00	1.00
Lanes:	1.00	1.90	0.10	1.00	1.74	0.26	1.00	0.86	0.14	1.00	0.81	0.19
Final Sat.:	1600	3033	167	1600	2779	421	1600	1370	230	1600	1291	309
Capacity Analysis Module:												
Vol/Sat:	0.02	0.15	0.15	0.03	0.27	0.27	0.03	0.13	0.13	0.03	0.16	0.16
Crit Moves:	****				****		****				****	

Newport Banning Ranch
Year 2016 with Project - TPO Analysis
AM Peak Hour

Level Of Service Computation Report
2000 HCM 4-Way Stop Method (Future Volume Alternative)

Intersection #39 Whittier Ave/17th St

Cycle (sec):	100	Critical Vol./Cap.(X):	0.425
Loss Time (sec):	0 (Y+R=4.0 sec)	Average Delay (sec/veh):	9.6
Optimal Cycle:	0	Level Of Service:	A

Street Name:	Whittier Avenue						17th St					
Approach:	North Bound			South Bound			East Bound			West Bound		
Movement:	L - T - R			L - T - R			L - T - R			L - T - R		
Control:	Stop Sign			Stop Sign			Stop Sign			Stop Sign		
Rights:	Include			Include			Include			Include		
Min. Green:	0	0	0	0	0	0	0	0	0	0	0	0
Lanes:	0 0 0 1 0			0 0 1! 0 0			0 0 1! 0 0			0 0 1! 0 0		
Volume Module:												
Base Vol:	0	35	2	24	23	53	56	2	5	1	0	24
Growth Adj:	1.07	1.07	1.07	1.07	1.07	1.07	1.07	1.07	1.07	1.07	1.07	1.07
Initial Bse:	0	38	2	26	25	57	60	2	5	1	0	26
Added Vol:	0	0	0	0	0	16	44	222	0	0	97	0
Committed P:	0	0	0	0	0	0	0	0	0	0	0	0
Initial Fut:	0	38	2	26	25	73	104	224	5	1	97	26
User Adj:	1.00	1.00	1.00	1.00	1.00	1.00	1.00	1.00	1.00	1.00	1.00	1.00
PHF Adj:	1.00	1.00	1.00	1.00	1.00	1.00	1.00	1.00	1.00	1.00	1.00	1.00
PHF Volume:	0	38	2	26	25	73	104	224	5	1	97	26
Reduct Vol:	0	0	0	0	0	0	0	0	0	0	0	0
Reduced Vol:	0	38	2	26	25	73	104	224	5	1	97	26
PCE Adj:	1.00	1.00	1.00	1.00	1.00	1.00	1.00	1.00	1.00	1.00	1.00	1.00
MLF Adj:	1.00	1.00	1.00	1.00	1.00	1.00	1.00	1.00	1.00	1.00	1.00	1.00
FinalVolume:	0	38	2	26	25	73	104	224	5	1	97	26
Saturation Flow Module:												
Adjustment:	1.00	1.00	1.00	1.00	1.00	1.00	1.00	1.00	1.00	1.00	1.00	1.00
Lanes:	0.00	0.95	0.05	0.21	0.20	0.59	0.31	0.67	0.02	0.01	0.78	0.21
Final Sat.:	0	617	35	149	143	423	245	528	13	7	597	158
Capacity Analysis Module:												
Vol/Sat:	xxxx	0.06	0.06	0.17	0.17	0.17	0.42	0.42	0.42	0.16	0.16	0.16
Crit Moves:		****		****			****			****		
Delay/Veh:	0.0	8.3	8.3	8.5	8.5	8.5	10.6	10.6	10.6	8.4	8.4	8.4
Delay Adj:	1.00	1.00	1.00	1.00	1.00	1.00	1.00	1.00	1.00	1.00	1.00	1.00
AdjDel/Veh:	0.0	8.3	8.3	8.5	8.5	8.5	10.6	10.6	10.6	8.4	8.4	8.4
LOS by Move:	*	A	A	A	A	A	B	B	B	A	A	A
ApproachDel:		8.3			8.5			10.6			8.4	
Delay Adj:		1.00			1.00			1.00			1.00	
ApprAdjDel:		8.3			8.5			10.6			8.4	
LOS by Appr:		A			A			B			A	
AllWayAvgQ:	0.1	0.1	0.1	0.2	0.2	0.2	0.7	0.7	0.7	0.2	0.2	0.2

Newport Banning Ranch
Year 2016 with Project - TPO Analysis
AM Peak Hour

Note: Queue reported is the number of cars per lane.

Newport Banning Ranch
Year 2016 with Project - TPO Analysis
AM Peak Hour

Level Of Service Computation Report
2000 HCM 4-Way Stop Method (Future Volume Alternative)

Intersection #40 Monrovia Ave/17th St

Cycle (sec):	100	Critical Vol./Cap.(X):	0.591
Loss Time (sec):	0 (Y+R=4.0 sec)	Average Delay (sec/veh):	14.4
Optimal Cycle:	0	Level Of Service:	B

Street Name:	Monrovia Avenue						17th Street					
Approach:	North Bound			South Bound			East Bound			West Bound		
Movement:	L -	T -	R	L -	T -	R	L -	T -	R	L -	T -	R
Control:	Stop Sign			Stop Sign			Stop Sign			Stop Sign		
Rights:	Include			Include			Include			Include		
Min. Green:	0	0	0	0	0	0	0	0	0	0	0	0
Lanes:	0 0	1! 0	0	0 0	1! 0	0	0 0	1! 0	0	0 0	1! 0	0
Volume Module:												
Base Vol:	36	88	63	26	86	12	14	75	32	67	135	56
Growth Adj:	1.07	1.07	1.07	1.07	1.07	1.07	1.07	1.07	1.07	1.07	1.07	1.07
Initial Bse:	39	94	68	28	92	13	15	80	34	72	145	60
Added Vol:	0	63	0	-8	23	27	74	148	0	0	70	-21
Committed P:	0	0	0	0	0	0	0	0	0	0	0	0
Initial Fut:	39	157	68	20	115	40	89	228	34	72	215	39
User Adj:	1.00	1.00	1.00	1.00	1.00	1.00	1.00	1.00	1.00	1.00	1.00	1.00
PHF Adj:	1.00	1.00	1.00	1.00	1.00	1.00	1.00	1.00	1.00	1.00	1.00	1.00
PHF Volume:	39	157	68	20	115	40	89	228	34	72	215	39
Reduct Vol:	0	0	0	0	0	0	0	0	0	0	0	0
Reduced Vol:	39	157	68	20	115	40	89	228	34	72	215	39
PCE Adj:	1.00	1.00	1.00	1.00	1.00	1.00	1.00	1.00	1.00	1.00	1.00	1.00
MLF Adj:	1.00	1.00	1.00	1.00	1.00	1.00	1.00	1.00	1.00	1.00	1.00	1.00
FinalVolume:	39	157	68	20	115	40	89	228	34	72	215	39
Saturation Flow Module:												
Adjustment:	1.00	1.00	1.00	1.00	1.00	1.00	1.00	1.00	1.00	1.00	1.00	1.00
Lanes:	0.15	0.60	0.25	0.11	0.66	0.23	0.25	0.65	0.10	0.22	0.66	0.12
Final Sat.:	81	330	142	58	339	117	151	387	58	130	388	71
Capacity Analysis Module:												
Vol/Sat:	0.48	0.48	0.48	0.34	0.34	0.34	0.59	0.59	0.59	0.55	0.55	0.55
Crit Moves:		****		****				****			****	
Delay/Veh:	13.5	13.5	13.5	11.8	11.8	11.8	15.8	15.8	15.8	14.9	14.9	14.9
Delay Adj:	1.00	1.00	1.00	1.00	1.00	1.00	1.00	1.00	1.00	1.00	1.00	1.00
AdjDel/Veh:	13.5	13.5	13.5	11.8	11.8	11.8	15.8	15.8	15.8	14.9	14.9	14.9
LOS by Move:	B	B	B	B	B	B	C	C	C	B	B	B
ApproachDel:		13.5			11.8			15.8			14.9	
Delay Adj:		1.00			1.00			1.00			1.00	
ApprAdjDel:		13.5			11.8			15.8			14.9	
LOS by Appr:		B			B			C			B	
AllWayAvgQ:	0.7	0.7	0.7	0.4	0.4	0.4	1.2	1.2	1.2	1.0	1.0	1.0

Newport Banning Ranch
Year 2016 with Project - TPO Analysis
AM Peak Hour

Note: Queue reported is the number of cars per lane.

Newport Banning Ranch
Year 2016 with Project - TPO Analysis
AM Peak Hour

Level Of Service Computation Report
ICU 1(Loss as Cycle Length %) Method (Future Volume Alternative)

Intersection #41 Placentia Ave/17th St

Cycle (sec):	100	Critical Vol./Cap.(X):	0.462
Loss Time (sec):	0 (Y+R=4.0 sec)	Average Delay (sec/veh):	xxxxxx
Optimal Cycle:	27	Level Of Service:	A

Street Name:	Placentia Avenue						17th St					
Approach:	North Bound			South Bound			East Bound			West Bound		
Movement:	L - T - R			L - T - R			L - T - R			L - T - R		
Control:	Permitted			Permitted			Permitted			Permitted		
Rights:	Include			Include			Include			Include		
Min. Green:	0	0	0	0	0	0	0	0	0	0	0	0
Lanes:	1 0 1	1 0		1 0 1	1 0		1 0 0	1 0		1 0 0	1 0	
Volume Module:												
Base Vol:	89	378	59	166	537	77	12	141	31	44	162	80
Growth Adj:	1.07	1.07	1.07	1.07	1.07	1.07	1.07	1.07	1.07	1.07	1.07	1.07
Initial Bse:	95	405	63	178	576	83	13	151	33	47	174	86
Added Vol:	-21	-106	1	0	-38	11	27	120	-8	1	60	0
Committed P:	3	5	3	0	2	0	0	0	0	0	0	0
Initial Fut:	77	304	67	178	540	94	40	271	25	48	234	86
User Adj:	1.00	1.00	1.00	1.00	1.00	1.00	1.00	1.00	1.00	1.00	1.00	1.00
PHF Adj:	1.00	1.00	1.00	1.00	1.00	1.00	1.00	1.00	1.00	1.00	1.00	1.00
PHF Volume:	77	304	67	178	540	94	40	271	25	48	234	86
Reduct Vol:	0	0	0	0	0	0	0	0	0	0	0	0
Reduced Vol:	77	304	67	178	540	94	40	271	25	48	234	86
PCE Adj:	1.00	1.00	1.00	1.00	1.00	1.00	1.00	1.00	1.00	1.00	1.00	1.00
MLF Adj:	1.00	1.00	1.00	1.00	1.00	1.00	1.00	1.00	1.00	1.00	1.00	1.00
FinalVolume:	77	304	67	178	540	94	40	271	25	48	234	86
Saturation Flow Module:												
Sat/Lane:	1600	1600	1600	1600	1600	1600	1600	1600	1600	1600	1600	1600
Adjustment:	1.00	1.00	1.00	1.00	1.00	1.00	1.00	1.00	1.00	1.00	1.00	1.00
Lanes:	1.00	1.64	0.36	1.00	1.70	0.30	1.00	0.91	0.09	1.00	0.73	0.27
Final Sat.:	1600	2621	579	1600	2727	473	1600	1464	136	1600	1170	430
Capacity Analysis Module:												
Vol/Sat:	0.05	0.12	0.12	0.11	0.20	0.20	0.02	0.19	0.19	0.03	0.20	0.20
Crit Moves:	****				****			****		****		

Newport Banning Ranch
Year 2016 with Project - TPO Analysis
AM Peak Hour

Level Of Service Computation Report
2000 HCM 4-Way Stop Method (Future Volume Alternative)

Intersection #42 Pomona Ave/17th St

Cycle (sec):	100	Critical Vol./Cap.(X):	0.852
Loss Time (sec):	0 (Y+R=4.0 sec)	Average Delay (sec/veh):	22.8
Optimal Cycle:	0	Level Of Service:	C

Street Name:	Pomona Avenue						17th Street					
Approach:	North Bound			South Bound			East Bound			West Bound		
Movement:	L -	T -	R	L -	T -	R	L -	T -	R	L -	T -	R
Control:	Stop Sign			Stop Sign			Stop Sign			Stop Sign		
Rights:	Include			Include			Include			Include		
Min. Green:	0	0	0	0	0	0	0	0	0	0	0	0
Lanes:	0 0	1! 0	0	0 0	1! 0	0	1 0	0 1	0	1 0	1 0	1
Volume Module:												
Base Vol:	6	40	19	101	116	59	12	303	29	60	273	53
Growth Adj:	1.07	1.07	1.07	1.07	1.07	1.07	1.07	1.07	1.07	1.07	1.07	1.07
Initial Bse:	6	43	20	108	124	63	13	325	31	64	293	57
Added Vol:	0	0	0	0	0	0	0	120	0	0	60	0
Committed P:	0	0	0	0	0	0	0	0	0	0	0	0
Initial Fut:	6	43	20	108	124	63	13	445	31	64	353	57
User Adj:	1.00	1.00	1.00	1.00	1.00	1.00	1.00	1.00	1.00	1.00	1.00	1.00
PHF Adj:	1.00	1.00	1.00	1.00	1.00	1.00	1.00	1.00	1.00	1.00	1.00	1.00
PHF Volume:	6	43	20	108	124	63	13	445	31	64	353	57
Reduct Vol:	0	0	0	0	0	0	0	0	0	0	0	0
Reduced Vol:	6	43	20	108	124	63	13	445	31	64	353	57
PCE Adj:	1.00	1.00	1.00	1.00	1.00	1.00	1.00	1.00	1.00	1.00	1.00	1.00
MLF Adj:	1.00	1.00	1.00	1.00	1.00	1.00	1.00	1.00	1.00	1.00	1.00	1.00
FinalVolume:	6	43	20	108	124	63	13	445	31	64	353	57
Saturation Flow Module:												
Adjustment:	1.00	1.00	1.00	1.00	1.00	1.00	1.00	1.00	1.00	1.00	1.00	1.00
Lanes:	0.09	0.62	0.29	0.37	0.42	0.21	1.00	0.93	0.07	1.00	1.00	1.00
Final Sat.:	41	272	129	190	219	111	510	522	36	501	542	601
Capacity Analysis Module:												
Vol/Sat:	0.16	0.16	0.16	0.57	0.57	0.57	0.03	0.85	0.85	0.13	0.65	0.09
Crit Moves:	****				****			****			****	
Delay/Veh:	11.3	11.3	11.3	16.8	16.8	16.8	9.8	34.1	34.1	10.7	19.7	9.0
Delay Adj:	1.00	1.00	1.00	1.00	1.00	1.00	1.00	1.00	1.00	1.00	1.00	1.00
AdjDel/Veh:	11.3	11.3	11.3	16.8	16.8	16.8	9.8	34.1	34.1	10.7	19.7	9.0
LOS by Move:	B	B	B	C	C	C	A	D	D	B	C	A
ApproachDel:	11.3			16.8			33.5			17.2		
Delay Adj:	1.00			1.00			1.00			1.00		
ApprAdjDel:	11.3			16.8			33.5			17.2		
LOS by Appr:	B			C			D			C		
AllWayAvgQ:	0.1	0.1	0.1	1.0	1.0	1.0	0.0	3.9	3.9	0.1	1.6	0.1

Newport Banning Ranch
Year 2016 with Project - TPO Analysis
AM Peak Hour

Note: Queue reported is the number of cars per lane.

Newport Banning Ranch
Year 2016 with Project - TPO Analysis
AM Peak Hour

Level Of Service Computation Report
ICU 1(Loss as Cycle Length %) Method (Future Volume Alternative)

Intersection #43 Superior Ave/17th St

Cycle (sec):	100	Critical Vol./Cap.(X):	0.800
Loss Time (sec):	0 (Y+R=4.0 sec)	Average Delay (sec/veh):	xxxxxx
Optimal Cycle:	114	Level Of Service:	C

Street Name:	Superior Avenue						17th Street					
Approach:	North Bound			South Bound			East Bound			West Bound		
Movement:	L - T - R			L - T - R			L - T - R			L - T - R		
Control:	Prot+Permit			Prot+Permit			Prot+Permit			Prot+Permit		
Rights:	Include			Include			Include			Include		
Min. Green:	0	0	0	0	0	0	0	0	0	0	0	0
Lanes:	1 0 0 1 1			1 0 1 1 0			1 0 1 1 0			1 0 1 1 0		
Volume Module:												
Base Vol:	39	123	703	49	213	39	8	386	35	363	366	48
Growth Adj:	1.07	1.07	1.07	1.07	1.07	1.07	1.07	1.07	1.07	1.07	1.07	1.07
Initial Bse:	42	132	754	53	228	42	9	414	38	389	392	51
Added Vol:	0	0	123	0	0	0	0	120	0	42	60	0
Committed P:	3	9	0	0	17	0	0	0	3	0	0	0
Initial Fut:	45	141	877	53	245	42	9	534	41	431	452	51
User Adj:	1.00	1.00	1.00	1.00	1.00	1.00	1.00	1.00	1.00	1.00	1.00	1.00
PHF Adj:	1.00	1.00	1.00	1.00	1.00	1.00	1.00	1.00	1.00	1.00	1.00	1.00
PHF Volume:	45	141	877	53	245	42	9	534	41	431	452	51
Reduct Vol:	0	0	0	0	0	0	0	0	0	0	0	0
Reduced Vol:	45	141	877	53	245	42	9	534	41	431	452	51
PCE Adj:	1.00	1.00	1.00	1.00	1.00	1.00	1.00	1.00	1.00	1.00	1.00	1.00
MLF Adj:	1.00	1.00	1.00	1.00	1.00	1.00	1.00	1.00	1.00	1.00	1.00	1.00
FinalVolume:	45	141	877	53	245	42	9	534	41	431	452	51
Saturation Flow Module:												
Sat/Lane:	1600	1600	1600	1600	1600	1600	1600	1600	1600	1600	1600	1600
Adjustment:	1.00	1.00	1.00	1.00	1.00	1.00	1.00	1.00	1.00	1.00	1.00	1.00
Lanes:	1.00	0.28	1.72	1.00	1.71	0.29	1.00	1.86	0.14	1.00	1.80	0.20
Final Sat.:	1600	443	2757	1600	2734	466	1600	2974	226	1600	2873	327
Capacity Analysis Module:												
Vol/Sat:	0.03	0.32	0.32	0.03	0.09	0.09	0.01	0.18	0.18	0.27	0.16	0.16
Crit Moves:		****		****				****		****		

Newport Banning Ranch
Year 2016 with Project - TPO Analysis
AM Peak Hour

Level Of Service Computation Report
ICU 1(Loss as Cycle Length %) Method (Future Volume Alternative)

Intersection #44 Newport Blvd/17th St

Cycle (sec):	120	Critical Vol./Cap.(X):	0.848
Loss Time (sec):	0 (Y+R=4.0 sec)	Average Delay (sec/veh):	xxxxxx
Optimal Cycle:	150	Level Of Service:	D

Street Name:	Newport Boulevard						17th Street					
Approach:	North Bound			South Bound			East Bound			West Bound		
Movement:	L - T - R			L - T - R			L - T - R			L - T - R		
Control:	Protected			Protected			Protected			Protected		
Rights:	Include			Include			Include			Include		
Min. Green:	0	0	0	0	0	0	0	0	0	0	0	0
Lanes:	1 0 3	1 0		2 0 3	0 1		3 0 1	1 0		2 0 3	0 1	
Volume Module:												
Base Vol:	50	1789	209	559	1808	328	759	396	3	142	400	147
Growth Adj:	1.07	1.07	1.07	1.07	1.07	1.07	1.07	1.07	1.07	1.07	1.07	1.07
Initial Bse:	54	1918	224	599	1938	352	814	425	3	152	429	158
Added Vol:	0	54	21	0	16	79	187	56	0	6	23	0
Committed P:	0	47	0	0	53	0	0	0	0	0	0	0
Initial Fut:	54	2019	245	599	2007	431	1001	481	3	158	452	158
User Adj:	1.00	1.00	1.00	1.00	1.00	1.00	1.00	1.00	1.00	1.00	1.00	1.00
PHF Adj:	1.00	1.00	1.00	1.00	1.00	1.00	1.00	1.00	1.00	1.00	1.00	1.00
PHF Volume:	54	2019	245	599	2007	431	1001	481	3	158	452	158
Reduct Vol:	0	0	0	0	0	0	0	0	0	0	0	0
Reduced Vol:	54	2019	245	599	2007	431	1001	481	3	158	452	158
PCE Adj:	1.00	1.00	1.00	1.00	1.00	1.00	1.00	1.00	1.00	1.00	1.00	1.00
MLF Adj:	1.00	1.00	1.00	1.00	1.00	1.00	1.00	1.00	1.00	1.00	1.00	1.00
FinalVolume:	54	2019	245	599	2007	431	1001	481	3	158	452	158
Saturation Flow Module:												
Sat/Lane:	1600	1600	1600	1600	1600	1600	1600	1600	1600	1600	1600	1600
Adjustment:	1.00	1.00	1.00	1.00	1.00	1.00	1.00	1.00	1.00	1.00	1.00	1.00
Lanes:	1.00	3.57	0.43	2.00	3.00	1.00	3.00	1.99	0.01	2.00	3.00	1.00
Final Sat.:	1600	5707	693	3200	4800	1600	4800	3179	21	3200	4800	1600
Capacity Analysis Module:												
Vol/Sat:	0.03	0.35	0.35	0.19	0.42	0.27	0.21	0.15	0.15	0.05	0.09	0.10
Crit Moves:		****		****			****					****

Newport Banning Ranch
Year 2016 with Project - TPO Analysis
AM Peak Hour

Level Of Service Computation Report
ICU 1(Loss as Cycle Length %) Method (Future Volume Alternative)

Intersection #45 Orange Ave/17th St

Cycle (sec):	100	Critical Vol./Cap.(X):	0.466
Loss Time (sec):	0 (Y+R=4.0 sec)	Average Delay (sec/veh):	xxxxxx
Optimal Cycle:	43	Level Of Service:	A

Street Name:	Orange Avenue						17th Street					
Approach:	North Bound			South Bound			East Bound			West Bound		
Movement:	L - T - R			L - T - R			L - T - R			L - T - R		
Control:	Prot+Permit			Prot+Permit			Prot+Permit			Prot+Permit		
Rights:	Include			Include			Include			Include		
Min. Green:	0	0	0	0	0	0	0	0	0	0	0	0
Lanes:	1 0 1	1 0		1 0 1	0 1		1 0 2	0 1		1 0 2	0 1	
Volume Module:												
Base Vol:	106	188	37	123	141	78	42	766	86	40	692	121
Growth Adj:	1.07	1.07	1.07	1.07	1.07	1.07	1.07	1.07	1.07	1.07	1.07	1.07
Initial Bse:	114	202	40	132	151	84	45	821	92	43	742	130
Added Vol:	0	0	0	0	0	0	0	77	0	0	29	0
Committed P:	0	0	0	0	0	0	0	1	0	1	2	1
Initial Fut:	114	202	40	132	151	84	45	899	92	44	773	131
User Adj:	1.00	1.00	1.00	1.00	1.00	1.00	1.00	1.00	1.00	1.00	1.00	1.00
PHF Adj:	1.00	1.00	1.00	1.00	1.00	1.00	1.00	1.00	1.00	1.00	1.00	1.00
PHF Volume:	114	202	40	132	151	84	45	899	92	44	773	131
Reduct Vol:	0	0	0	0	0	0	0	0	0	0	0	0
Reduced Vol:	114	202	40	132	151	84	45	899	92	44	773	131
PCE Adj:	1.00	1.00	1.00	1.00	1.00	1.00	1.00	1.00	1.00	1.00	1.00	1.00
MLF Adj:	1.00	1.00	1.00	1.00	1.00	1.00	1.00	1.00	1.00	1.00	1.00	1.00
FinalVolume:	114	202	40	132	151	84	45	899	92	44	773	131
Saturation Flow Module:												
Sat/Lane:	1600	1600	1600	1600	1600	1600	1600	1600	1600	1600	1600	1600
Adjustment:	1.00	1.00	1.00	1.00	1.00	1.00	1.00	1.00	1.00	1.00	1.00	1.00
Lanes:	1.00	1.67	0.33	1.00	1.00	1.00	1.00	2.00	1.00	1.00	2.00	1.00
Final Sat.:	1600	2674	526	1600	1600	1600	1600	3200	1600	1600	3200	1600
Capacity Analysis Module:												
Vol/Sat:	0.07	0.08	0.08	0.08	0.09	0.05	0.03	0.28	0.06	0.03	0.24	0.08
Crit Moves:		****		****				****		****		

Newport Banning Ranch
Year 2016 with Project - TPO Analysis
AM Peak Hour

Level Of Service Computation Report
ICU 1(Loss as Cycle Length %) Method (Future Volume Alternative)

Intersection #46 Santa Ana Ave/17th St

Cycle (sec):	100	Critical Vol./Cap.(X):	0.447
Loss Time (sec):	0 (Y+R=4.0 sec)	Average Delay (sec/veh):	xxxxxx
Optimal Cycle:	34	Level Of Service:	A

Street Name:	Santa Ana Avenue						17th Street					
Approach:	North Bound			South Bound			East Bound			West Bound		
Movement:	L - T - R			L - T - R			L - T - R			L - T - R		
Control:	Permitted			Permitted			Prot+Permit			Prot+Permit		
Rights:	Include			Include			Include			Include		
Min. Green:	0	0	0	0	0	0	0	0	0	0	0	0
Lanes:	1 0 1	0 1		1 0 1	0 1		1 0 2	0 1		1 0 2	0 1	
Volume Module:												
Base Vol:	89	120	70	74	106	62	34	787	41	40	761	58
Growth Adj:	1.07	1.07	1.07	1.07	1.07	1.07	1.07	1.07	1.07	1.07	1.07	1.07
Initial Bse:	95	129	75	79	114	66	36	844	44	43	816	62
Added Vol:	0	0	0	0	0	0	0	77	0	0	29	0
Committed P:	0	0	1	1	0	0	0	3	0	2	8	2
Initial Fut:	95	129	76	80	114	66	36	924	44	45	853	64
User Adj:	1.00	1.00	1.00	1.00	1.00	1.00	1.00	1.00	1.00	1.00	1.00	1.00
PHF Adj:	1.00	1.00	1.00	1.00	1.00	1.00	1.00	1.00	1.00	1.00	1.00	1.00
PHF Volume:	95	129	76	80	114	66	36	924	44	45	853	64
Reduct Vol:	0	0	0	0	0	0	0	0	0	0	0	0
Reduced Vol:	95	129	76	80	114	66	36	924	44	45	853	64
PCE Adj:	1.00	1.00	1.00	1.00	1.00	1.00	1.00	1.00	1.00	1.00	1.00	1.00
MLF Adj:	1.00	1.00	1.00	1.00	1.00	1.00	1.00	1.00	1.00	1.00	1.00	1.00
FinalVolume:	95	129	76	80	114	66	36	924	44	45	853	64
Saturation Flow Module:												
Sat/Lane:	1600	1600	1600	1600	1600	1600	1600	1600	1600	1600	1600	1600
Adjustment:	1.00	1.00	1.00	1.00	1.00	1.00	1.00	1.00	1.00	1.00	1.00	1.00
Lanes:	1.00	1.00	1.00	1.00	1.00	1.00	1.00	2.00	1.00	1.00	2.00	1.00
Final Sat.:	1600	1600	1600	1600	1600	1600	1600	3200	1600	1600	3200	1600
Capacity Analysis Module:												
Vol/Sat:	0.06	0.08	0.05	0.05	0.07	0.04	0.02	0.29	0.03	0.03	0.27	0.04
Crit Moves:	****				****			****		****		

Newport Banning Ranch
Year 2016 with Project - TPO Analysis
AM Peak Hour

Level Of Service Computation Report
ICU 1(Loss as Cycle Length %) Method (Future Volume Alternative)

Intersection #47 Tustin Ave/17th St

Cycle (sec):	100	Critical Vol./Cap.(X):	0.537
Loss Time (sec):	0 (Y+R=4.0 sec)	Average Delay (sec/veh):	xxxxxx
Optimal Cycle:	40	Level Of Service:	A

Street Name:	Tustin Avenue						17th Street					
Approach:	North Bound			South Bound			East Bound			West Bound		
Movement:	L - T - R			L - T - R			L - T - R			L - T - R		
Control:	Permitted			Permitted			Prot+Permit			Prot+Permit		
Rights:	Include			Include			Include			Include		
Min. Green:	0	0	0	0	0	0	0	0	0	0	0	0
Lanes:	1 0 0	1 0		1 0	1 0 1		1 0	1 1 0		1 0	1 1 0	
Volume Module:												
Base Vol:	94	139	80	48	94	39	36	807	91	40	732	34
Growth Adj:	1.07	1.07	1.07	1.07	1.07	1.07	1.07	1.07	1.07	1.07	1.07	1.07
Initial Bse:	101	149	86	51	101	42	39	865	98	43	785	36
Added Vol:	0	0	0	0	0	0	0	77	0	0	29	0
Committed P:	0	0	2	2	0	0	0	7	0	2	14	2
Initial Fut:	101	149	88	53	101	42	39	949	98	45	828	38
User Adj:	1.00	1.00	1.00	1.00	1.00	1.00	1.00	1.00	1.00	1.00	1.00	1.00
PHF Adj:	1.00	1.00	1.00	1.00	1.00	1.00	1.00	1.00	1.00	1.00	1.00	1.00
PHF Volume:	101	149	88	53	101	42	39	949	98	45	828	38
Reduct Vol:	0	0	0	0	0	0	0	0	0	0	0	0
Reduced Vol:	101	149	88	53	101	42	39	949	98	45	828	38
PCE Adj:	1.00	1.00	1.00	1.00	1.00	1.00	1.00	1.00	1.00	1.00	1.00	1.00
MLF Adj:	1.00	1.00	1.00	1.00	1.00	1.00	1.00	1.00	1.00	1.00	1.00	1.00
FinalVolume:	101	149	88	53	101	42	39	949	98	45	828	38
Saturation Flow Module:												
Sat/Lane:	1600	1600	1600	1600	1600	1600	1600	1600	1600	1600	1600	1600
Adjustment:	1.00	1.00	1.00	1.00	1.00	1.00	1.00	1.00	1.00	1.00	1.00	1.00
Lanes:	1.00	0.63	0.37	1.00	1.00	1.00	1.00	1.81	0.19	1.00	1.91	0.09
Final Sat.:	1600	1007	593	1600	1600	1600	1600	2902	298	1600	3058	142
Capacity Analysis Module:												
Vol/Sat:	0.06	0.15	0.15	0.03	0.06	0.03	0.02	0.33	0.33	0.03	0.27	0.27
Crit Moves:		****		****				****		****		

Newport Banning Ranch
Year 2016 with Project - TPO Analysis
AM Peak Hour

Level Of Service Computation Report
ICU 1(Loss as Cycle Length %) Method (Future Volume Alternative)

Intersection #48 Irvine Ave/17th St

Cycle (sec):	100	Critical Vol./Cap.(X):	0.552
Loss Time (sec):	0 (Y+R=4.0 sec)	Average Delay (sec/veh):	xxxxxx
Optimal Cycle:	51	Level Of Service:	A

Street Name:	Irvine Avenue						17th Street					
Approach:	North Bound			South Bound			East Bound			West Bound		
Movement:	L - T - R			L - T - R			L - T - R			L - T - R		
Control:	Protected			Protected			Protected			Protected		
Rights:	Include			Include			Include			Include		
Min. Green:	0	0	0	0	0	0	0	0	0	0	0	0
Lanes:	2 0 2	0 1		2 0 2	0 1		2 0 1	1 0		1 0 1	1 0	
Volume Module:												
Base Vol:	274	590	35	203	458	127	209	489	217	33	299	40
Growth Adj:	1.07	1.07	1.07	1.07	1.07	1.07	1.07	1.07	1.07	1.07	1.07	1.07
Initial Bse:	294	632	38	218	491	136	224	524	233	35	321	43
Added Vol:	0	0	0	0	0	0	0	77	0	0	29	0
Committed P:	1	1	0	0	0	6	3	9	1	0	14	0
Initial Fut:	295	633	38	218	491	142	227	610	234	35	364	43
User Adj:	1.00	1.00	1.00	1.00	1.00	1.00	1.00	1.00	1.00	1.00	1.00	1.00
PHF Adj:	1.00	1.00	1.00	1.00	1.00	1.00	1.00	1.00	1.00	1.00	1.00	1.00
PHF Volume:	295	633	38	218	491	142	227	610	234	35	364	43
Reduct Vol:	0	0	0	0	0	0	0	0	0	0	0	0
Reduced Vol:	295	633	38	218	491	142	227	610	234	35	364	43
PCE Adj:	1.00	1.00	1.00	1.00	1.00	1.00	1.00	1.00	1.00	1.00	1.00	1.00
MLF Adj:	1.00	1.00	1.00	1.00	1.00	1.00	1.00	1.00	1.00	1.00	1.00	1.00
FinalVolume:	295	633	38	218	491	142	227	610	234	35	364	43
Saturation Flow Module:												
Sat/Lane:	1600	1600	1600	1600	1600	1600	1600	1600	1600	1600	1600	1600
Adjustment:	1.00	1.00	1.00	1.00	1.00	1.00	1.00	1.00	1.00	1.00	1.00	1.00
Lanes:	2.00	2.00	1.00	2.00	2.00	1.00	2.00	1.45	0.55	1.00	1.79	0.21
Final Sat.:	3200	3200	1600	3200	3200	1600	3200	2314	886	1600	2862	338
Capacity Analysis Module:												
Vol/Sat:	0.09	0.20	0.02	0.07	0.15	0.09	0.07	0.26	0.26	0.02	0.13	0.13
Crit Moves:		****		****				****		****		

Newport Banning Ranch
Year 2016 with Project - TPO Analysis
AM Peak Hour

Level Of Service Computation Report
ICU 1(Loss as Cycle Length %) Method (Future Volume Alternative)

Intersection #49 Placentia Ave/16th St

Cycle (sec):	100	Critical Vol./Cap.(X):	0.353
Loss Time (sec):	0 (Y+R=4.0 sec)	Average Delay (sec/veh):	xxxxxx
Optimal Cycle:	22	Level Of Service:	A

Street Name:	Placentia Avenue						16th Street					
Approach:	North Bound			South Bound			East Bound			West Bound		
Movement:	L - T - R			L - T - R			L - T - R			L - T - R		
Control:	Permitted			Permitted			Permitted			Permitted		
Rights:	Include			Include			Include			Include		
Min. Green:	0	0	0	0	0	0	0	0	0	0	0	0
Lanes:	1 0	1 1	0	1 0	1 1	0	1 0	0 1	0	1 0	0 1	0
Volume Module:												
Base Vol:	76	454	36	70	442	88	26	57	31	17	105	35
Growth Adj:	1.07	1.07	1.07	1.07	1.07	1.07	1.07	1.07	1.07	1.07	1.07	1.07
Initial Bse:	81	487	39	75	474	94	28	61	33	18	113	38
Added Vol:	-21	-146	0	0	-52	7	20	134	-8	0	40	0
Committed P:	3	13	3	0	3	0	0	0	0	0	0	0
Initial Fut:	63	354	42	75	425	101	48	195	25	18	153	38
User Adj:	1.00	1.00	1.00	1.00	1.00	1.00	1.00	1.00	1.00	1.00	1.00	1.00
PHF Adj:	1.00	1.00	1.00	1.00	1.00	1.00	1.00	1.00	1.00	1.00	1.00	1.00
PHF Volume:	63	354	42	75	425	101	48	195	25	18	153	38
Reduct Vol:	0	0	0	0	0	0	0	0	0	0	0	0
Reduced Vol:	63	354	42	75	425	101	48	195	25	18	153	38
PCE Adj:	1.00	1.00	1.00	1.00	1.00	1.00	1.00	1.00	1.00	1.00	1.00	1.00
MLF Adj:	1.00	1.00	1.00	1.00	1.00	1.00	1.00	1.00	1.00	1.00	1.00	1.00
FinalVolume:	63	354	42	75	425	101	48	195	25	18	153	38
Saturation Flow Module:												
Sat/Lane:	1600	1600	1600	1600	1600	1600	1600	1600	1600	1600	1600	1600
Adjustment:	1.00	1.00	1.00	1.00	1.00	1.00	1.00	1.00	1.00	1.00	1.00	1.00
Lanes:	1.00	1.79	0.21	1.00	1.61	0.39	1.00	0.89	0.11	1.00	0.80	0.20
Final Sat.:	1600	2863	337	1600	2584	616	1600	1417	183	1600	1284	316
Capacity Analysis Module:												
Vol/Sat:	0.04	0.12	0.12	0.05	0.16	0.16	0.03	0.14	0.14	0.01	0.12	0.12
Crit Moves:	****				****			****		****		

Newport Banning Ranch
Year 2016 with Project - TPO Analysis
AM Peak Hour

Level Of Service Computation Report
ICU 1(Loss as Cycle Length %) Method (Future Volume Alternative)

Intersection #50 Superior Ave/16th St

Cycle (sec):	100	Critical Vol./Cap.(X):	0.558
Loss Time (sec):	0 (Y+R=4.0 sec)	Average Delay (sec/veh):	xxxxxx
Optimal Cycle:	33	Level Of Service:	A

Street Name:	Superior Avenue						16th Street					
Approach:	North Bound			South Bound			East Bound			West Bound		
Movement:	L - T - R			L - T - R			L - T - R			L - T - R		
Control:	Permitted			Permitted			Permitted			Permitted		
Rights:	Include			Include			Include			Include		
Min. Green:	0	0	0	0	0	0	0	0	0	0	0	0
Lanes:	1 0 2	0	1	1 0 1	1	0	1 0 1	0	0	0 1 0	0	1
Volume Module:												
Base Vol:	25	967	66	41	540	130	23	173	0	15	153	15
Growth Adj:	1.07	1.07	1.07	1.07	1.07	1.07	1.07	1.07	1.07	1.07	1.07	1.07
Initial Bse:	27	1037	71	44	579	139	25	185	0	16	164	16
Added Vol:	0	68	0	0	25	17	56	78	0	0	23	0
Committed P:	0	27	0	0	23	0	0	0	0	0	0	0
Initial Fut:	27	1132	71	44	627	156	81	263	0	16	187	16
User Adj:	1.00	1.00	1.00	1.00	1.00	1.00	1.00	1.00	1.00	1.00	1.00	1.00
PHF Adj:	1.00	1.00	1.00	1.00	1.00	1.00	1.00	1.00	1.00	1.00	1.00	1.00
PHF Volume:	27	1132	71	44	627	156	81	263	0	16	187	16
Reduct Vol:	0	0	0	0	0	0	0	0	0	0	0	0
Reduced Vol:	27	1132	71	44	627	156	81	263	0	16	187	16
PCE Adj:	1.00	1.00	1.00	1.00	1.00	1.00	1.00	1.00	1.00	1.00	1.00	1.00
MLF Adj:	1.00	1.00	1.00	1.00	1.00	1.00	1.00	1.00	1.00	1.00	1.00	1.00
FinalVolume:	27	1132	71	44	627	156	81	263	0	16	187	16
Saturation Flow Module:												
Sat/Lane:	1600	1600	1600	1600	1600	1600	1600	1600	1600	1600	1600	1600
Adjustment:	1.00	1.00	1.00	1.00	1.00	1.00	1.00	1.00	1.00	1.00	1.00	1.00
Lanes:	1.00	2.00	1.00	1.00	1.60	0.40	1.00	1.00	0.00	0.08	0.92	1.00
Final Sat.:	1600	3200	1600	1600	2561	639	1600	1600	0	127	1473	1600
Capacity Analysis Module:												
Vol/Sat:	0.02	0.35	0.04	0.03	0.24	0.24	0.05	0.16	0.00	0.01	0.13	0.01
Crit Moves:		****		****			****				****	

Newport Banning Ranch
Year 2016 with Project - TPO Analysis
AM Peak Hour

Level Of Service Computation Report
ICU 1(Loss as Cycle Length %) Method (Future Volume Alternative)

Intersection #51 Newport Blvd/16th St

Cycle (sec):	120	Critical Vol./Cap.(X):	0.564
Loss Time (sec):	0 (Y+R=4.0 sec)	Average Delay (sec/veh):	xxxxxx
Optimal Cycle:	43	Level Of Service:	A

Street Name:	Newport Boulevard									16th Street								
Approach:	North Bound						South Bound						East Bound						West Bound					
Movement:	L	-	T	-	R		L	-	T	-	R		L	-	T	-	R		L	-	T	-	R	
Control:	Protected						Protected						Permitted						Permitted					
Rights:		Include						Include						Include						Include				
Min. Green:	0	0		0			0	0		0			0	0		0			0	0		0		
Lanes:	1	0	2	1	0		1	0	3	0	1		0	0	1!	0	0		0	0	1!	0	0	
Volume Module:																								
Base Vol:	8	1539		42			60	1370		49			38	44		13			19	68		77		
Growth Adj:	1.07	1.07		1.07			1.07	1.07		1.07			1.07	1.07		1.07			1.07	1.07		1.07		
Initial Bse:	9	1650		45			64	1469		53			41	47		14			20	73		83		
Added Vol:	0	75		0			0	23		0			0	0		0			0	0		0		
Committed P:	2	47		10			0	53		0			0	0		5			12	0		0		
Initial Fut:	11	1772		55			64	1545		53			41	47		19			32	73		83		
User Adj:	1.00	1.00		1.00			1.00	1.00		1.00			1.00	1.00		1.00			1.00	1.00		1.00		
PHF Adj:	1.00	1.00		1.00			1.00	1.00		1.00			1.00	1.00		1.00			1.00	1.00		1.00		
PHF Volume:	11	1772		55			64	1545		53			41	47		19			32	73		83		
Reduct Vol:	0	0		0			0	0		0			0	0		0			0	0		0		
Reduced Vol:	11	1772		55			64	1545		53			41	47		19			32	73		83		
PCE Adj:	1.00	1.00		1.00			1.00	1.00		1.00			1.00	1.00		1.00			1.00	1.00		1.00		
MLF Adj:	1.00	1.00		1.00			1.00	1.00		1.00			1.00	1.00		1.00			1.00	1.00		1.00		
FinalVolume:	11	1772		55			64	1545		53			41	47		19			32	73		83		
Saturation Flow Module:																								
Sat/Lane:	1600	1600		1600			1600	1600		1600			1600	1600		1600			1600	1600		1600		
Adjustment:	1.00	1.00		1.00			1.00	1.00		1.00			1.00	1.00		1.00			1.00	1.00		1.00		
Lanes:	1.00	2.91		0.09			1.00	3.00		1.00			0.38	0.44		0.18			0.17	0.39		0.44		
Final Sat.:	1600	4655		145			1600	4800		1600			610	706		284			276	621		703		
Capacity Analysis Module:																								
Vol/Sat:	0.01	0.38		0.38			0.04	0.32		0.03			0.03	0.07		0.07			0.02	0.12		0.12		
Crit Moves:		****					****						****							****				

Newport Banning Ranch
Year 2016 with Project - TPO Analysis
AM Peak Hour

Level Of Service Computation Report
ICU 1(Loss as Cycle Length %) Method (Future Volume Alternative)

Intersection #52 Bluff Rd/Victoria St

Cycle (sec):	100	Critical Vol./Cap.(X):	0.504
Loss Time (sec):	0 (Y+R=4.0 sec)	Average Delay (sec/veh):	xxxxxx
Optimal Cycle:	46	Level Of Service:	A

Street Name:	Bluff Road						Victoria St					
Approach:	North Bound			South Bound			East Bound			West Bound		
Movement:	L - T - R			L - T - R			L - T - R			L - T - R		
Control:	Protected			Protected			Protected			Protected		
Rights:	Include			Include			Include			Include		
Min. Green:	0	0	0	0	0	0	0	0	0	0	0	0
Lanes:	0 0 0 0 0			0 0 0 0 0			0 0 2 0 0			0 0 2 0 0		
Volume Module:												
Base Vol:	0	0	0	0	0	0	0	1505	0	0	749	0
Growth Adj:	1.00	1.00	1.00	1.00	1.00	1.00	1.00	1.07	1.00	1.00	1.07	1.00
Initial Bse:	0	0	0	0	0	0	0	1613	0	0	803	0
Added Vol:	0	0	0	0	0	0	0	0	0	0	0	0
PasserByVol:	0	0	0	0	0	0	0	0	0	0	0	0
Initial Fut:	0	0	0	0	0	0	0	1613	0	0	803	0
User Adj:	1.00	1.00	1.00	1.00	1.00	1.00	1.00	1.00	1.00	1.00	1.00	1.00
PHF Adj:	1.00	1.00	1.00	1.00	1.00	1.00	1.00	1.00	1.00	1.00	1.00	1.00
PHF Volume:	0	0	0	0	0	0	0	1613	0	0	803	0
Reduct Vol:	0	0	0	0	0	0	0	0	0	0	0	0
Reduced Vol:	0	0	0	0	0	0	0	1613	0	0	803	0
PCE Adj:	1.00	1.00	1.00	1.00	1.00	1.00	1.00	1.00	1.00	1.00	1.00	1.00
MLF Adj:	1.00	1.00	1.00	1.00	1.00	1.00	1.00	1.00	1.00	1.00	1.00	1.00
FinalVolume:	0	0	0	0	0	0	0	1613	0	0	803	0
Saturation Flow Module:												
Sat/Lane:	1600	1600	1600	1600	1600	1600	1600	1600	1600	1600	1600	1600
Adjustment:	1.00	1.00	1.00	1.00	1.00	1.00	1.00	1.00	1.00	1.00	1.00	1.00
Lanes:	0.00	0.00	0.00	0.00	0.00	0.00	0.00	2.00	0.00	0.00	2.00	0.00
Final Sat.:	0	0	0	0	0	0	0	3200	0	0	3200	0
Capacity Analysis Module:												
Vol/Sat:	0.00	0.00	0.00	0.00	0.00	0.00	0.00	0.50	0.00	0.00	0.25	0.00
Crit Moves:								****		****		

Newport Banning Ranch
Year 2016 with Project - TPO Analysis
AM Peak Hour

Level Of Service Computation Report
ICU 1(Loss as Cycle Length %) Method (Future Volume Alternative)

Intersection #53 Bluff Rd/19th St

Cycle (sec):	100	Critical Vol./Cap.(X):	0.079
Loss Time (sec):	0 (Y+R=4.0 sec)	Average Delay (sec/veh):	xxxxxx
Optimal Cycle:	16	Level Of Service:	A

Street Name:	Bluff Rd						19th Street					
Approach:	North Bound			South Bound			East Bound			West Bound		
Movement:	L - T - R			L - T - R			L - T - R			L - T - R		
Control:	Permitted			Permitted			Permitted			Permitted		
Rights:	Include			Include			Include			Include		
Min. Green:	0	0	0	0	0	0	0	0	0	0	0	0
Lanes:	0 0 1	0	1	0 1	0	0	0 0 0	0	0	1 0	0	0
Volume Module:												
Base Vol:	0	0	0	0	0	0	0	0	0	0	0	0
Growth Adj:	1.00	1.00	1.00	1.00	1.00	1.00	1.00	1.00	1.00	1.00	1.00	1.00
Initial Bse:	0	0	0	0	0	0	0	0	0	0	0	0
Added Vol:	0	0	97	0	0	0	0	0	0	29	0	0
PasserByVol:	0	0	0	0	0	0	0	0	0	0	0	0
Initial Fut:	0	0	97	0	0	0	0	0	0	29	0	0
User Adj:	1.00	1.00	1.00	1.00	1.00	1.00	1.00	1.00	1.00	1.00	1.00	1.00
PHF Adj:	1.00	1.00	1.00	1.00	1.00	1.00	1.00	1.00	1.00	1.00	1.00	1.00
PHF Volume:	0	0	97	0	0	0	0	0	0	29	0	0
Reduct Vol:	0	0	0	0	0	0	0	0	0	0	0	0
Reduced Vol:	0	0	97	0	0	0	0	0	0	29	0	0
PCE Adj:	1.00	1.00	1.00	1.00	1.00	1.00	1.00	1.00	1.00	1.00	1.00	1.00
MLF Adj:	1.00	1.00	1.00	1.00	1.00	1.00	1.00	1.00	1.00	1.00	1.00	1.00
FinalVolume:	0	0	97	0	0	0	0	0	0	29	0	0
Saturation Flow Module:												
Sat/Lane:	1600	1600	1600	1600	1600	1600	1600	1600	1600	1600	1600	1600
Adjustment:	1.00	1.00	1.00	1.00	1.00	1.00	1.00	1.00	1.00	1.00	1.00	1.00
Lanes:	0.00	1.00	1.00	0.00	1.00	0.00	0.00	0.00	0.00	1.00	0.00	0.00
Final Sat.:	0	1600	1600	0	1600	0	0	0	0	1600	0	0
Capacity Analysis Module:												
Vol/Sat:	0.00	0.00	0.06	0.00	0.00	0.00	0.00	0.00	0.00	0.02	0.00	0.00
Crit Moves:			****							****		

Newport Banning Ranch
Year 2016 with Project - TPO Analysis
AM Peak Hour

Level Of Service Computation Report
ICU 1(Loss as Cycle Length %) Method (Future Volume Alternative)

Intersection #54 Bluff Rd/17th St

Cycle (sec):	100	Critical Vol./Cap.(X):	0.129
Loss Time (sec):	0 (Y+R=4.0 sec)	Average Delay (sec/veh):	xxxxxx
Optimal Cycle:	17	Level Of Service:	A

Street Name:	Bluff Road						17th Street					
Approach:	North Bound			South Bound			East Bound			West Bound		
Movement:	L - T - R			L - T - R			L - T - R			L - T - R		
Control:	Permitted			Permitted			Permitted			Permitted		
Rights:	Include			Include			Include			Include		
Min. Green:	0	0	0	0	0	0	0	0	0	0	0	0
Lanes:	1 0 1	1 0		1 0 0	1 0		0 1 0	0 0		1 0 1	0 1	
Volume Module:												
Base Vol:	0	0	0	0	0	0	0	0	0	0	0	0
Growth Adj:	1.00	1.00	1.00	1.00	1.00	1.00	1.00	1.00	1.00	1.00	1.00	1.00
Initial Bse:	0	0	0	0	0	0	0	0	0	0	0	0
Added Vol:	0	84	139	0	65	3	10	1	0	57	0	0
PasserByVol:	0	0	0	0	0	0	0	0	0	0	0	0
Initial Fut:	0	84	139	0	65	3	10	1	0	57	0	0
User Adj:	1.00	1.00	1.00	1.00	1.00	1.00	1.00	1.00	1.00	1.00	1.00	1.00
PHF Adj:	1.00	1.00	1.00	1.00	1.00	1.00	1.00	1.00	1.00	1.00	1.00	1.00
PHF Volume:	0	84	139	0	65	3	10	1	0	57	0	0
Reduct Vol:	0	0	0	0	0	0	0	0	0	0	0	0
Reduced Vol:	0	84	139	0	65	3	10	1	0	57	0	0
PCE Adj:	1.00	1.00	1.00	1.00	1.00	1.00	1.00	1.00	1.00	1.00	1.00	1.00
MLF Adj:	1.00	1.00	1.00	1.00	1.00	1.00	1.00	1.00	1.00	1.00	1.00	1.00
FinalVolume:	0	84	139	0	65	3	10	1	0	57	0	0
Saturation Flow Module:												
Sat/Lane:	1600	1600	1600	1600	1600	1600	1600	1600	1600	1600	1600	1600
Adjustment:	1.00	1.00	1.00	1.00	1.00	1.00	1.00	1.00	1.00	1.00	1.00	1.00
Lanes:	1.00	1.00	1.00	1.00	0.96	0.04	0.91	0.09	0.00	1.00	1.00	1.00
Final Sat.:	1600	1600	1600	1600	1529	71	1455	145	0	1600	1600	1600
Capacity Analysis Module:												
Vol/Sat:	0.00	0.05	0.09	0.00	0.04	0.04	0.01	0.01	0.00	0.04	0.00	0.00
Crit Moves:			****	****				****		****		

Newport Banning Ranch
Year 2016 with Project - TPO Analysis
AM Peak Hour

Level Of Service Computation Report
2000 HCM Unsignalized Method (Future Volume Alternative)

Intersection #55 Bluff Rd/16th St

Average Delay (sec/veh): 3.3 Worst Case Level Of Service: B[13.3]

Street Name:	Bluff Road						16th Street					
Approach:	North Bound			South Bound			East Bound			West Bound		
Movement:	L - T - R			L - T - R			L - T - R			L - T - R		
Control:	Uncontrolled			Uncontrolled			Stop Sign			Stop Sign		
Rights:	Include			Include			Include			Include		
Lanes:	1 0 1	1 0		1 0 1	1 0		0 0 0	1 0		0 0 1!	0 0	
Volume Module:												
Base Vol:	0	0	0	0	0	0	0	0	0	0	0	0
Growth Adj:	1.00	1.00	1.00	1.00	1.00	1.00	1.00	1.00	1.00	1.00	1.00	1.00
Initial Bse:	0	0	0	0	0	0	0	0	0	0	0	0
Added Vol:	7	202	69	105	211	0	0	23	23	25	7	30
PasserByVol:	0	0	0	0	0	0	0	0	0	0	0	0
Initial Fut:	7	202	69	105	211	0	0	23	23	25	7	30
User Adj:	1.00	1.00	1.00	1.00	1.00	1.00	1.00	1.00	1.00	1.00	1.00	1.00
PHF Adj:	1.00	1.00	1.00	1.00	1.00	1.00	1.00	1.00	1.00	1.00	1.00	1.00
PHF Volume:	7	202	69	105	211	0	0	23	23	25	7	30
Reduct Vol:	0	0	0	0	0	0	0	0	0	0	0	0
FinalVolume:	7	202	69	105	211	0	0	23	23	25	7	30
Critical Gap Module:												
Critical Gp:	4.1	xxxx	xxxxx	4.1	xxxx	xxxxx	xxxxx	6.5	6.9	7.5	6.5	6.9
FollowUpTim:	2.2	xxxx	xxxxx	2.2	xxxx	xxxxx	xxxxx	4.0	3.3	3.5	4.0	3.3
Capacity Module:												
Cnflict Vol:	211	xxxx	xxxxx	271	xxxx	xxxxx	xxxx	706	106	578	672	136
Potent Cap.:	1372	xxxx	xxxxx	1304	xxxx	xxxxx	xxxx	363	935	404	380	895
Move Cap.:	1372	xxxx	xxxxx	1304	xxxx	xxxxx	xxxx	332	935	349	348	895
Volume/Cap:	0.01	xxxx	xxxx	0.08	xxxx	xxxx	xxxx	0.07	0.02	0.07	0.02	0.03
Level Of Service Module:												
2Way95thQ:	0.0	xxxx	xxxxx	0.3	xxxx	xxxxx	xxxx	xxxx	xxxxx	xxxx	xxxx	xxxxx
Control Del:	7.6	xxxx	xxxxx	8.0	xxxx	xxxxx	xxxxx	xxxx	xxxxx	xxxxx	xxxx	xxxxx
LOS by Move:	A	*	*	A	*	*	*	*	*	*	*	*
Movement:	LT - LTR - RT			LT - LTR - RT			LT - LTR - RT			LT - LTR - RT		
Shared Cap.:	xxxx	xxxx	xxxxx	xxxx	xxxx	xxxxx	xxxx	xxxx	490	xxxx	495	xxxxx
SharedQueue:	xxxxx	xxxx	xxxxx	xxxxx	xxxx	xxxxx	xxxxx	xxxx	0.3	xxxxx	0.4	xxxxx
Shrd ConDel:	xxxxx	xxxx	xxxxx	xxxxx	xxxx	xxxxx	xxxxx	xxxx	13.1	xxxxx	13.3	xxxxx
Shared LOS:	*	*	*	*	*	*	*	*	B	*	B	*
ApproachDel:	xxxxxx			xxxxxx			13.1			13.3		
ApproachLOS:	*			*			B			B		

Note: Queue reported is the number of cars per lane.

Newport Banning Ranch
Year 2016 with Project - TPO Analysis
AM Peak Hour

Level Of Service Computation Report
ICU 1(Loss as Cycle Length %) Method (Future Volume Alternative)

Intersection #56 Bluff Rd/15th St

Cycle (sec):	100	Critical Vol./Cap.(X):	0.188
Loss Time (sec):	0 (Y+R=4.0 sec)	Average Delay (sec/veh):	xxxxxx
Optimal Cycle:	23	Level Of Service:	A

Street Name:	Bluff Road						15th Street					
Approach:	North Bound			South Bound			East Bound			West Bound		
Movement:	L - T - R			L - T - R			L - T - R			L - T - R		
Control:	Split Phase			Split Phase			Permitted			Permitted		
Rights:	Include			Include			Include			Include		
Min. Green:	0	0	0	0	0	0	0	0	0	0	0	0
Lanes:	0 0 0 0 0			1 0 0 0 2			2 0 2 0 0			0 0 2 1 0		
Volume Module:												
Base Vol:	0	0	0	0	0	0	0	0	0	0	0	0
Growth Adj:	1.00	1.00	1.00	1.00	1.00	1.00	1.00	1.00	1.00	1.00	1.00	1.00
Initial Bse:	0	0	0	0	0	0	0	0	0	0	0	0
Added Vol:	0	0	0	46	0	257	275	246	0	0	92	14
PasserByVol:	0	0	0	0	0	0	0	0	0	0	0	0
Initial Fut:	0	0	0	46	0	257	275	246	0	0	92	14
User Adj:	1.00	1.00	1.00	1.00	1.00	1.00	1.00	1.00	1.00	1.00	1.00	1.00
PHF Adj:	1.00	1.00	1.00	1.00	1.00	1.00	1.00	1.00	1.00	1.00	1.00	1.00
PHF Volume:	0	0	0	46	0	257	275	246	0	0	92	14
Reduct Vol:	0	0	0	0	0	0	0	0	0	0	0	0
Reduced Vol:	0	0	0	46	0	257	275	246	0	0	92	14
PCE Adj:	1.00	1.00	1.00	1.00	1.00	1.00	1.00	1.00	1.00	1.00	1.00	1.00
MLF Adj:	1.00	1.00	1.00	1.00	1.00	1.00	1.00	1.00	1.00	1.00	1.00	1.00
FinalVolume:	0	0	0	46	0	257	275	246	0	0	92	14
Saturation Flow Module:												
Sat/Lane:	1600	1600	1600	1600	1600	1600	1600	1600	1600	1600	1600	1600
Adjustment:	1.00	1.00	1.00	1.00	1.00	1.00	1.00	1.00	1.00	1.00	1.00	1.00
Lanes:	0.00	0.00	0.00	1.00	0.00	2.00	2.00	2.00	0.00	0.00	2.60	0.40
Final Sat.:	0	0	0	1600	0	3200	3200	3200	0	0	4166	634
Capacity Analysis Module:												
Vol/Sat:	0.00	0.00	0.00	0.03	0.00	0.08	0.09	0.08	0.00	0.00	0.02	0.02
Crit Moves:						****	****				****	

Newport Banning Ranch
Year 2016 with Project - TPO Analysis
AM Peak Hour

Level Of Service Computation Report
ICU 1(Loss as Cycle Length %) Method (Future Volume Alternative)

Intersection #57 Bluff Rd/W. Coast Hwy

Cycle (sec):	120	Critical Vol./Cap.(X):	0.647
Loss Time (sec):	0 (Y+R=4.0 sec)	Average Delay (sec/veh):	xxxxxx
Optimal Cycle:	65	Level Of Service:	B

Street Name:	Bluff Road									W. Coast Highway								
Approach:	North Bound					South Bound				East Bound					West Bound			
Movement:	L	-	T	-	R	L	-	T	-	R	L	-	T	-	R	L	-	T	-	R
Control:	Split Phase					Split Phase					Protected					Protected				
Rights:	Include					Include					Include					Include				
Min. Green:	0	0	0			0	0	0			0	0	0			0	0	0		
Lanes:	0	0	0	0	0	2	0	0	0	2	2	0	3	0	0	0	0	3	0	1
Volume Module:																				
Base Vol:	0	0	0			0	0	0			0	2834	0			0	1183	0		
Growth Adj:	1.00	1.00	1.00			1.00	1.00	1.00			1.00	1.07	1.00			1.00	1.07	1.00		
Initial Bse:	0	0	0			0	0	0			0	3038	0			0	1268	0		
Added Vol:	0	0	0			114	0	277			406	-350	0			0	-125	45		
PasserByVol:	0	0	0			0	0	0			0	0	0			0	0	0		
Initial Fut:	0	0	0			114	0	277			406	2688	0			0	1143	45		
User Adj:	1.00	1.00	1.00			1.00	1.00	1.00			1.00	1.00	1.00			1.00	1.00	1.00		
PHF Adj:	1.00	1.00	1.00			1.00	1.00	1.00			1.00	1.00	1.00			1.00	1.00	1.00		
PHF Volume:	0	0	0			114	0	277			406	2688	0			0	1143	45		
Reduct Vol:	0	0	0			0	0	0			0	0	0			0	0	0		
Reduced Vol:	0	0	0			114	0	277			406	2688	0			0	1143	45		
PCE Adj:	1.00	1.00	1.00			1.00	1.00	1.00			1.00	1.00	1.00			1.00	1.00	1.00		
MLF Adj:	1.00	1.00	1.00			1.00	1.00	1.00			1.00	1.00	1.00			1.00	1.00	1.00		
FinalVolume:	0	0	0			114	0	277			406	2688	0			0	1143	45		
Saturation Flow Module:																				
Sat/Lane:	1600	1600	1600			1600	1600	1600			1600	1600	1600			1600	1600	1600		
Adjustment:	1.00	1.00	1.00			1.00	1.00	1.00			1.00	1.00	1.00			1.00	1.00	1.00		
Lanes:	0.00	0.00	0.00			2.00	0.00	2.00			2.00	3.00	0.00			0.00	3.00	1.00		
Final Sat.:	0	0	0			3200	0	3200			3200	4800	0			0	4800	1600		
Capacity Analysis Module:																				
Vol/Sat:	0.00	0.00	0.00			0.04	0.00	0.09			0.13	0.56	0.00			0.00	0.24	0.03		
Crit Moves:								****				****				****				

Newport Banning Ranch
Year 2016 with Project - TPO Analysis
AM Peak Hour

Level Of Service Computation Report
2000 HCM 4-Way Stop Method (Future Volume Alternative)

Intersection #58 Monrovia Ave/15th Street

Cycle (sec):	100	Critical Vol./Cap.(X):	0.373
Loss Time (sec):	0 (Y+R=4.0 sec)	Average Delay (sec/veh):	9.3
Optimal Cycle:	0	Level Of Service:	A

Street Name:	Monrovia Ave						15th Street					
Approach:	North Bound			South Bound			East Bound			West Bound		
Movement:	L - T	- R		L - T	- R		L - T	- R		L - T	- R	
Control:	Stop Sign			Stop Sign			Stop Sign			Stop Sign		
Rights:	Include			Include			Include			Include		
Min. Green:	0	0	0	0	0	0	0	0	0	0	0	0
Lanes:	0 0	0 1	0	0 0	1! 0	0	0 1	0 0	0	0 0	1! 0	0
Volume Module: >> Count Date: 4 May 2011 << Existing AM Peak Hour												
Base Vol:	0	6	11	113	3	1	1	0	0	5	2	82
Growth Adj:	1.00	1.00	1.00	1.00	1.00	1.00	1.00	1.00	1.00	1.00	1.00	1.00
Initial Bse:	0	6	11	113	3	1	1	0	0	5	2	82
Added Vol:	0	0	0	-8	0	23	63	229	0	0	83	-21
PasserByVol:	0	0	0	0	0	0	0	0	0	0	0	0
Initial Fut:	0	6	11	105	3	24	64	229	0	5	85	61
User Adj:	1.00	1.00	1.00	1.00	1.00	1.00	1.00	1.00	1.00	1.00	1.00	1.00
PHF Adj:	1.00	1.00	1.00	1.00	1.00	1.00	1.00	1.00	1.00	1.00	1.00	1.00
PHF Volume:	0	6	11	105	3	24	64	229	0	5	85	61
Reduct Vol:	0	0	0	0	0	0	0	0	0	0	0	0
Reduced Vol:	0	6	11	105	3	24	64	229	0	5	85	61
PCE Adj:	1.00	1.00	1.00	1.00	1.00	1.00	1.00	1.00	1.00	1.00	1.00	1.00
MLF Adj:	1.00	1.00	1.00	1.00	1.00	1.00	1.00	1.00	1.00	1.00	1.00	1.00
FinalVolume:	0	6	11	105	3	24	64	229	0	5	85	61
Saturation Flow Module:												
Adjustment:	1.00	1.00	1.00	1.00	1.00	1.00	1.00	1.00	1.00	1.00	1.00	1.00
Lanes:	0.00	0.35	0.65	0.80	0.02	0.18	0.22	0.78	0.00	0.03	0.57	0.40
Final Sat.:	0	247	453	542	15	124	171	614	0	26	448	322
Capacity Analysis Module:												
Vol/Sat:	xxxx	0.02	0.02	0.19	0.19	0.19	0.37	0.37	xxxx	0.19	0.19	0.19
Crit Moves:		****			****			****			****	
Delay/Veh:	0.0	7.8	7.8	9.0	9.0	9.0	10.0	10.0	0.0	8.3	8.3	8.3
Delay Adj:	1.00	1.00	1.00	1.00	1.00	1.00	1.00	1.00	1.00	1.00	1.00	1.00
AdjDel/Veh:	0.0	7.8	7.8	9.0	9.0	9.0	10.0	10.0	0.0	8.3	8.3	8.3
LOS by Move:	*	A	A	A	A	A	B	B	*	A	A	A
ApproachDel:		7.8			9.0			10.0			8.3	
Delay Adj:		1.00			1.00			1.00			1.00	
ApprAdjDel:		7.8			9.0			10.0			8.3	
LOS by Appr:		A			A			B			A	
AllWayAvgQ:	0.0	0.0	0.0	0.2	0.2	0.2	0.6	0.6	0.6	0.2	0.2	0.2

Newport Banning Ranch
Year 2016 with Project - TPO Analysis
AM Peak Hour

Note: Queue reported is the number of cars per lane.

Newport Banning Ranch
Year 2016 with Project - TPO Analysis
AM Peak Hour

Level Of Service Computation Report
ICU 1(Loss as Cycle Length %) Method (Future Volume Alternative)

Intersection #100 Pomona Ave/16th St

Cycle (sec):	100	Critical Vol./Cap.(X):	0.027
Loss Time (sec):	0 (Y+R=4.0 sec)	Average Delay (sec/veh):	xxxxxx
Optimal Cycle:	15	Level Of Service:	A

Street Name:	Pomona Avenue						16th Street					
Approach:	North Bound			South Bound			East Bound			West Bound		
Movement:	L - T - R			L - T - R			L - T - R			L - T - R		
Control:	Permitted			Permitted			Permitted			Permitted		
Rights:	Include			Include			Include			Include		
Min. Green:	0	0	0	0	0	0	0	0	0	0	0	0
Lanes:	0 0 0 0 0			1 0 0 1 0			1 0 0 1 0			0 0 0 1 0		
Volume Module:												
Base Vol:	0	0	0	37	30	11	0	-200	0	0	-200	0
Growth Adj:	1.07	1.07	1.07	1.07	1.07	1.07	1.07	1.07	1.07	1.07	1.07	1.07
Initial Bse:	0	0	0	40	32	12	0	-214	0	0	-214	0
Added Vol:	0	0	0	0	0	0	0	134	0	0	40	0
PasserByVol:	0	0	0	0	0	0	0	0	0	0	0	0
Initial Fut:	0	0	0	40	32	12	0	-80	0	0	-174	0
User Adj:	1.00	1.00	1.00	1.00	1.00	1.00	1.00	0.00	1.00	1.00	0.00	1.00
PHF Adj:	1.00	1.00	1.00	1.00	1.00	1.00	1.00	0.00	1.00	1.00	0.00	1.00
PHF Volume:	0	0	0	40	32	12	0	0	0	0	0	0
Reduct Vol:	0	0	0	0	0	0	0	0	0	0	0	0
Reduced Vol:	0	0	0	40	32	12	0	0	0	0	0	0
PCE Adj:	1.00	1.00	1.00	1.00	1.00	1.00	1.00	0.00	1.00	1.00	0.00	1.00
MLF Adj:	1.00	1.00	1.00	1.00	1.00	1.00	1.00	0.00	1.00	1.00	0.00	1.00
FinalVolume:	0	0	0	40	32	12	0	0	0	0	0	0
Saturation Flow Module:												
Sat/Lane:	1600	1600	1600	1600	1600	1600	1600	1600	1600	1600	1600	1600
Adjustment:	1.00	1.00	1.00	1.00	1.00	1.00	1.00	1.00	1.00	1.00	1.00	1.00
Lanes:	0.00	0.00	0.00	1.00	0.73	0.27	1.00	1.00	0.00	0.00	1.00	0.00
Final Sat.:	0	0	0	1600	1171	429	1600	1600	0	0	1600	0
Capacity Analysis Module:												
Vol/Sat:	0.00	0.00	0.00	0.02	0.03	0.03	0.00	0.00	0.00	0.00	0.00	0.00
Crit Moves:					****							

Newport Banning Ranch
Year 2016 with Project - TPO Analysis
PM Peak Hour

Scenario Report

Scenario:	TPO 2016 w/ Project PM ICU
Command:	TPO 2016 w/ Project PM ICU
Volume:	Existing+Commited PM
Geometry:	2016 Planned ICU
Impact Fee:	Default Impact Fee
Trip Generation:	Proposed Project PM
Trip Distribution:	Project
Paths:	Bluff to 19th
Routes:	Default Route
Configuration:	2016 ICU

Newport Banning Ranch
Year 2016 with Project - TPO Analysis
PM Peak Hour

Level Of Service Computation Report
2000 HCM 4-Way Stop Method (Future Volume Alternative)

Intersection #1 Monrovia Ave/16th St

Cycle (sec):	100	Critical Vol./Cap.(X):	0.354
Loss Time (sec):	0 (Y+R=4.0 sec)	Average Delay (sec/veh):	10.2
Optimal Cycle:	0	Level Of Service:	B

Street Name:	Monrovia Avenue						16th Street					
Approach:	North Bound			South Bound			East Bound			West Bound		
Movement:	L -	T -	R	L -	T -	R	L -	T -	R	L -	T -	R
Control:	Stop Sign			Stop Sign			Stop Sign			Stop Sign		
Rights:	Include			Include			Include			Include		
Min. Green:	0	0	0	0	0	0	0	0	0	0	0	0
Lanes:	0 0	1! 0	0	0 0	1! 0	0	0 0	1! 0	0	0 0	1! 0	0
Volume Module:												
Base Vol:	8	73	23	29	95	17	37	70	21	18	23	31
Growth Adj:	1.00	1.00	1.00	1.00	1.00	1.00	1.00	1.00	1.00	1.00	1.00	1.00
Initial Bse:	8	73	23	29	95	17	37	70	21	18	23	31
Added Vol:	0	16	0	-21	42	42	16	94	0	0	177	-8
Committed P:	0	0	0	0	0	0	0	0	0	0	0	0
Initial Fut:	8	89	23	8	137	59	53	164	21	18	200	23
User Adj:	1.00	1.00	1.00	1.00	1.00	1.00	1.00	1.00	1.00	1.00	1.00	1.00
PHF Adj:	1.00	1.00	1.00	1.00	1.00	1.00	1.00	1.00	1.00	1.00	1.00	1.00
PHF Volume:	8	89	23	8	137	59	53	164	21	18	200	23
Reduct Vol:	0	0	0	0	0	0	0	0	0	0	0	0
Reduced Vol:	8	89	23	8	137	59	53	164	21	18	200	23
PCE Adj:	1.00	1.00	1.00	1.00	1.00	1.00	1.00	1.00	1.00	1.00	1.00	1.00
MLF Adj:	1.00	1.00	1.00	1.00	1.00	1.00	1.00	1.00	1.00	1.00	1.00	1.00
FinalVolume:	8	89	23	8	137	59	53	164	21	18	200	23
Saturation Flow Module:												
Adjustment:	1.00	1.00	1.00	1.00	1.00	1.00	1.00	1.00	1.00	1.00	1.00	1.00
Lanes:	0.07	0.74	0.19	0.04	0.67	0.29	0.22	0.69	0.09	0.07	0.83	0.10
Final Sat.:	41	462	119	26	442	191	151	466	60	51	566	65
Capacity Analysis Module:												
Vol/Sat:	0.19	0.19	0.19	0.31	0.31	0.31	0.35	0.35	0.35	0.35	0.35	0.35
Crit Moves:	****				****			****			****	
Delay/Veh:	9.4	9.4	9.4	10.1	10.1	10.1	10.5	10.5	10.5	10.5	10.5	10.5
Delay Adj:	1.00	1.00	1.00	1.00	1.00	1.00	1.00	1.00	1.00	1.00	1.00	1.00
AdjDel/Veh:	9.4	9.4	9.4	10.1	10.1	10.1	10.5	10.5	10.5	10.5	10.5	10.5
LOS by Move:	A	A	A	B	B	B	B	B	B	B	B	B
ApproachDel:	9.4			10.1			10.5			10.5		
Delay Adj:	1.00			1.00			1.00			1.00		
ApprAdjDel:	9.4			10.1			10.5			10.5		
LOS by Appr:	A			B			B			B		
AllWayAvgQ:	0.2	0.2	0.2	0.4	0.4	0.4	0.5	0.5	0.5	0.5	0.5	0.5

Newport Banning Ranch
Year 2016 with Project - TPO Analysis
PM Peak Hour

Note: Queue reported is the number of cars per lane.

Newport Banning Ranch
Year 2016 with Project - TPO Analysis
PM Peak Hour

Level Of Service Computation Report
ICU 1(Loss as Cycle Length %) Method (Future Volume Alternative)

Intersection #2 Placentia Ave/15th St

Cycle (sec):	100	Critical Vol./Cap.(X):	0.483
Loss Time (sec):	0 (Y+R=4.0 sec)	Average Delay (sec/veh):	xxxxxx
Optimal Cycle:	44	Level Of Service:	A

Street Name:	Placentia Ave						15th Street					
Approach:	North Bound			South Bound			East Bound			West Bound		
Movement:	L - T - R			L - T - R			L - T - R			L - T - R		
Control:	Prot+Permit			Prot+Permit			Split Phase			Split Phase		
Rights:	Include			Include			Include			Include		
Min. Green:	0	0	0	0	0	0	0	0	0	0	0	0
Lanes:	1 0 1	1 0		1 0 1	1 0		0 0 1!	0 0		0 1 0	0 1	
Volume Module:												
Base Vol:	71	440	17	14	394	30	27	23	132	10	48	84
Growth Adj:	1.00	1.00	1.00	1.00	1.00	1.00	1.00	1.00	1.00	1.00	1.00	1.00
Initial Bse:	71	440	17	14	394	30	27	23	132	10	48	84
Added Vol:	147	-72	0	0	-189	24	12	0	97	0	70	0
Committed P:	0	32	0	0	12	0	0	0	0	0	0	0
Initial Fut:	218	400	17	14	217	54	39	23	229	10	118	84
User Adj:	1.00	1.00	1.00	1.00	1.00	1.00	1.00	1.00	1.00	1.00	1.00	1.00
PHF Adj:	1.00	1.00	1.00	1.00	1.00	1.00	1.00	1.00	1.00	1.00	1.00	1.00
PHF Volume:	218	400	17	14	217	54	39	23	229	10	118	84
Reduct Vol:	0	0	0	0	0	0	0	0	0	0	0	0
Reduced Vol:	218	400	17	14	217	54	39	23	229	10	118	84
PCE Adj:	1.00	1.00	1.00	1.00	1.00	1.00	1.00	1.00	1.00	1.00	1.00	1.00
MLF Adj:	1.00	1.00	1.00	1.00	1.00	1.00	1.00	1.00	1.00	1.00	1.00	1.00
FinalVolume:	218	400	17	14	217	54	39	23	229	10	118	84
Saturation Flow Module:												
Sat/Lane:	1600	1600	1600	1600	1600	1600	1600	1600	1600	1600	1600	1600
Adjustment:	1.00	1.00	1.00	1.00	1.00	1.00	1.00	1.00	1.00	1.00	1.00	1.00
Lanes:	1.00	1.92	0.08	1.00	1.60	0.40	0.13	0.08	0.79	0.08	0.92	1.00
Final Sat.:	1600	3070	130	1600	2562	638	214	126	1259	125	1475	1600
Capacity Analysis Module:												
Vol/Sat:	0.14	0.13	0.13	0.01	0.08	0.08	0.18	0.18	0.18	0.08	0.08	0.05
Crit Moves:	****				****			****			****	

Newport Banning Ranch
Year 2016 with Project - TPO Analysis
PM Peak Hour

Level Of Service Computation Report
2000 HCM Unsignalized Method (Future Volume Alternative)

Intersection #3 Superior Ave/15th St

Average Delay (sec/veh): 1.2 Worst Case Level Of Service: D[32.1]

Street Name:	Superior Avenue						15th Street					
Approach:	North Bound			South Bound			East Bound			West Bound		
Movement:	L - T - R			L - T - R			L - T - R			L - T - R		
Control:	Uncontrolled			Uncontrolled			Stop Sign			Stop Sign		
Rights:	Include			Include			Include			Include		
Lanes:	1 0 2 0 0			0 0 1 1 0			1 0 0 0 1			0 0 0 0 0		
Volume Module:												
Base Vol:	35	593	0	0	786	92	35	0	24	0	0	0
Growth Adj:	1.00	1.00	1.00	1.00	1.00	1.00	1.00	1.00	1.00	1.00	1.00	1.00
Initial Bse:	35	593	0	0	786	92	35	0	24	0	0	0
Added Vol:	0	68	0	0	15	70	0	0	0	0	0	0
Committed P:	0	40	0	0	124	0	0	0	0	0	0	0
Initial Fut:	35	701	0	0	925	162	35	0	24	0	0	0
User Adj:	1.00	1.00	1.00	1.00	1.00	1.00	1.00	1.00	1.00	1.00	1.00	1.00
PHF Adj:	1.00	1.00	1.00	1.00	1.00	1.00	1.00	1.00	1.00	1.00	1.00	1.00
PHF Volume:	35	701	0	0	925	162	35	0	24	0	0	0
Reduct Vol:	0	0	0	0	0	0	0	0	0	0	0	0
FinalVolume:	35	701	0	0	925	162	35	0	24	0	0	0
Critical Gap Module:												
Critical Gp:	4.1	xxxx	xxxxx	xxxxx	xxxx	xxxxx	6.8	xxxx	6.9	xxxxx	xxxx	xxxxx
FollowUpTim:	2.2	xxxx	xxxxx	xxxxx	xxxx	xxxxx	3.5	xxxx	3.3	xxxxx	xxxx	xxxxx
Capacity Module:												
Cnflict Vol:	1087	xxxx	xxxxx	xxxx	xxxx	xxxxx	1427	xxxx	544	xxxx	xxxx	xxxxx
Potent Cap.:	649	xxxx	xxxxx	xxxx	xxxx	xxxxx	129	xxxx	489	xxxx	xxxx	xxxxx
Move Cap.:	649	xxxx	xxxxx	xxxx	xxxx	xxxxx	123	xxxx	489	xxxx	xxxx	xxxxx
Volume/Cap:	0.05	xxxx	xxxx	xxxx	xxxx	xxxx	0.28	xxxx	0.05	xxxx	xxxx	xxxx
Level Of Service Module:												
2Way95thQ:	0.2	xxxx	xxxxx	xxxx	xxxx	xxxxx	1.1	xxxx	0.2	xxxx	xxxx	xxxxx
Control Del:	10.9	xxxx	xxxxx	xxxxx	xxxx	xxxxx	45.4	xxxx	12.7	xxxxx	xxxx	xxxxx
LOS by Move:	B	*	*	*	*	*	E	*	B	*	*	*
Movement:	LT - LTR - RT			LT - LTR - RT			LT - LTR - RT			LT - LTR - RT		
Shared Cap.:	xxxx	xxxx	xxxxx	xxxx	xxxx	xxxxx	xxxx	xxxx	xxxxx	xxxx	xxxx	xxxxx
SharedQueue:	xxxxx	xxxx	xxxxx	xxxxx	xxxx	xxxxx	xxxxx	xxxx	xxxxx	xxxxx	xxxx	xxxxx
Shrd ConDel:	xxxxx	xxxx	xxxxx	xxxxx	xxxx	xxxxx	xxxxx	xxxx	xxxxx	xxxxx	xxxx	xxxxx
Shared LOS:	*	*	*	*	*	*	*	*	*	*	*	*
ApproachDel:	xxxxxx			xxxxxx			32.1			xxxxxx		
ApproachLOS:	*			*			D			*		

Note: Queue reported is the number of cars per lane.

Newport Banning Ranch
Year 2016 with Project - TPO Analysis
PM Peak Hour

Level Of Service Computation Report
ICU 1(Loss as Cycle Length %) Method (Future Volume Alternative)

Intersection #4 Superior Ave/Placentia Ave

Cycle (sec):	100	Critical Vol./Cap.(X):	0.549
Loss Time (sec):	0 (Y+R=4.0 sec)	Average Delay (sec/veh):	xxxxxx
Optimal Cycle:	41	Level Of Service:	A

Street Name:	Superior Avenue						Placentia Avenue					
Approach:	North Bound			South Bound			East Bound			West Bound		
Movement:	L - T - R			L - T - R			L - T - R			L - T - R		
Control:	Protected			Protected			Permitted			Permitted		
Rights:	Include			Include			Include			Include		
Min. Green:	0	0	0	0	0	0	0	0	0	0	0	0
Lanes:	1 0 1	1 0		1 0 1	1 0		1 0 1	0 1		0 1 0	1 0	
Volume Module:												
Base Vol:	224	419	22	57	664	11	11	166	316	41	287	86
Growth Adj:	1.00	1.00	1.00	1.00	1.00	1.00	1.00	1.00	1.00	1.00	1.00	1.00
Initial Bse:	224	419	22	57	664	11	11	166	316	41	287	86
Added Vol:	-80	-50	0	0	-140	155	118	0	-210	0	0	0
Committed P:	0	40	0	55	69	0	0	2	0	6	32	0
Initial Fut:	144	409	22	112	593	166	129	168	106	47	319	86
User Adj:	1.00	1.00	1.00	1.00	1.00	1.00	1.00	1.00	1.00	1.00	1.00	1.00
PHF Adj:	1.00	1.00	1.00	1.00	1.00	1.00	1.00	1.00	1.00	1.00	1.00	1.00
PHF Volume:	144	409	22	112	593	166	129	168	106	47	319	86
Reduct Vol:	0	0	0	0	0	0	0	0	0	0	0	0
Reduced Vol:	144	409	22	112	593	166	129	168	106	47	319	86
PCE Adj:	1.00	1.00	1.00	1.00	1.00	1.00	1.00	1.00	1.00	1.00	1.00	1.00
MLF Adj:	1.00	1.00	1.00	1.00	1.00	1.00	1.00	1.00	1.00	1.00	1.00	1.00
FinalVolume:	144	409	22	112	593	166	129	168	106	47	319	86
Saturation Flow Module:												
Sat/Lane:	1600	1600	1600	1600	1600	1600	1600	1600	1600	1600	1600	1600
Adjustment:	1.00	1.00	1.00	1.00	1.00	1.00	1.00	1.00	1.00	1.00	1.00	1.00
Lanes:	1.00	1.90	0.10	1.00	1.56	0.44	1.00	1.00	1.00	0.21	1.41	0.38
Final Sat.:	1600	3037	163	1600	2500	700	1600	1600	1600	333	2258	609
Capacity Analysis Module:												
Vol/Sat:	0.09	0.13	0.13	0.07	0.24	0.24	0.08	0.11	0.07	0.03	0.14	0.14
Crit Moves:	****				****		****				****	

Newport Banning Ranch
Year 2016 with Project - TPO Analysis
PM Peak Hour

Level Of Service Computation Report
ICU 1(Loss as Cycle Length %) Method (Future Volume Alternative)

Intersection #5 Hospital Rd/Newport Blvd

Cycle (sec):	120	Critical Vol./Cap.(X):	0.636
Loss Time (sec):	0 (Y+R=4.0 sec)	Average Delay (sec/veh):	xxxxxx
Optimal Cycle:	63	Level Of Service:	B

Street Name:	Newport Boulevard						Hospital Road					
Approach:	North Bound			South Bound			East Bound			West Bound		
Movement:	L - T - R			L - T - R			L - T - R			L - T - R		
Control:	Protected			Protected			Protected			Protected		
Rights:	Include			Include			Include			Include		
Min. Green:	0	0	0	0	0	0	0	0	0	0	0	0
Lanes:	1 0 3 0 1			1 0 3 0 1			2 0 1 0 1			1 0 1 1 0		
Volume Module:												
Base Vol:	117	1215	55	48	1513	205	293	135	187	121	178	38
Growth Adj:	1.00	1.00	1.00	1.00	1.00	1.00	1.00	1.00	1.00	1.00	1.00	1.00
Initial Bse:	117	1215	55	48	1513	205	293	135	187	121	178	38
Added Vol:	0	0	0	0	0	0	0	0	0	0	0	0
Committed P:	26	69	0	0	62	6	19	0	41	0	0	0
Initial Fut:	143	1284	55	48	1575	211	312	135	228	121	178	38
User Adj:	1.00	1.00	1.00	1.00	1.00	1.00	1.00	1.00	1.00	1.00	1.00	1.00
PHF Adj:	1.00	1.00	1.00	1.00	1.00	1.00	1.00	1.00	1.00	1.00	1.00	1.00
PHF Volume:	143	1284	55	48	1575	211	312	135	228	121	178	38
Reduct Vol:	0	0	0	0	0	0	0	0	0	0	0	0
Reduced Vol:	143	1284	55	48	1575	211	312	135	228	121	178	38
PCE Adj:	1.00	1.00	1.00	1.00	1.00	1.00	1.00	1.00	1.00	1.00	1.00	1.00
MLF Adj:	1.00	1.00	1.00	1.00	1.00	1.00	1.00	1.00	1.00	1.00	1.00	1.00
FinalVolume:	143	1284	55	48	1575	211	312	135	228	121	178	38
Saturation Flow Module:												
Sat/Lane:	1600	1600	1600	1600	1600	1600	1600	1600	1600	1600	1600	1600
Adjustment:	1.00	1.00	1.00	1.00	1.00	1.00	1.00	1.00	1.00	1.00	1.00	1.00
Lanes:	1.00	3.00	1.00	1.00	3.00	1.00	2.00	1.00	1.00	1.00	1.65	0.35
Final Sat.:	1600	4800	1600	1600	4800	1600	3200	1600	1600	1600	2637	563
Capacity Analysis Module:												
Vol/Sat:	0.09	0.27	0.03	0.03	0.33	0.13	0.10	0.08	0.14	0.08	0.07	0.07
Crit Moves:	****				****				****	****		

Newport Banning Ranch
Year 2016 with Project - TPO Analysis
PM Peak Hour

Level Of Service Computation Report
ICU 1(Loss as Cycle Length %) Method (Future Volume Alternative)

Intersection #6 Orange St/W. Coast Hwy

Cycle (sec):	120	Critical Vol./Cap.(X):	0.748
Loss Time (sec):	0 (Y+R=4.0 sec)	Average Delay (sec/veh):	xxxxxx
Optimal Cycle:	74	Level Of Service:	C

Street Name:	Orange Street						W. Coast Highway					
Approach:	North Bound			South Bound			East Bound			West Bound		
Movement:	L - T - R			L - T - R			L - T - R			L - T - R		
Control:	Permitted			Permitted			Protected			Protected		
Rights:	Include			Include			Include			Include		
Min. Green:	0	0	0	0	0	0	0	0	0	0	0	0
Lanes:	0 1	0 0	1	0 1	0 0	1	1 0	2 1	0	1 0	3 0	1
Volume Module:												
Base Vol:	37	8	29	32	2	18	44	1170	19	53	2788	26
Growth Adj:	1.00	1.00	1.00	1.00	1.00	1.00	1.07	1.07	1.07	1.07	1.07	1.07
Initial Bse:	37	8	29	32	2	18	47	1254	20	57	2989	28
Added Vol:	0	0	0	0	0	0	0	199	0	0	132	0
Committed P:	0	0	0	0	0	0	0	56	0	0	95	0
Initial Fut:	37	8	29	32	2	18	47	1509	20	57	3216	28
User Adj:	1.00	1.00	1.00	1.00	1.00	1.00	1.00	1.00	1.00	1.00	1.00	1.00
PHF Adj:	1.00	1.00	1.00	1.00	1.00	1.00	1.00	1.00	1.00	1.00	1.00	1.00
PHF Volume:	37	8	29	32	2	18	47	1509	20	57	3216	28
Reduct Vol:	0	0	0	0	0	0	0	0	0	0	0	0
Reduced Vol:	37	8	29	32	2	18	47	1509	20	57	3216	28
PCE Adj:	1.00	1.00	1.00	1.00	1.00	1.00	1.00	1.00	1.00	1.00	1.00	1.00
MLF Adj:	1.00	1.00	1.00	1.00	1.00	1.00	1.00	1.00	1.00	1.00	1.00	1.00
FinalVolume:	37	8	29	32	2	18	47	1509	20	57	3216	28
Saturation Flow Module:												
Sat/Lane:	1600	1600	1600	1600	1600	1600	1600	1600	1600	1600	1600	1600
Adjustment:	1.00	1.00	1.00	1.00	1.00	1.00	1.00	1.00	1.00	1.00	1.00	1.00
Lanes:	0.82	0.18	1.00	0.94	0.06	1.00	1.00	2.96	0.04	1.00	3.00	1.00
Final Sat.:	1316	284	1600	1506	94	1600	1600	4736	64	1600	4800	1600
Capacity Analysis Module:												
Vol/Sat:	0.02	0.03	0.02	0.02	0.02	0.01	0.03	0.32	0.32	0.04	0.67	0.02
Crit Moves:		****		****			****				****	

Newport Banning Ranch
Year 2016 with Project - TPO Analysis
PM Peak Hour

Level Of Service Computation Report
ICU 1(Loss as Cycle Length %) Method (Future Volume Alternative)

Intersection #7 Prospect St/W. Coast Hwy

Cycle (sec):	120	Critical Vol./Cap.(X):	0.721
Loss Time (sec):	0 (Y+R=4.0 sec)	Average Delay (sec/veh):	xxxxxx
Optimal Cycle:	67	Level Of Service:	C

Street Name:	Prospect Street						W. Coast Highway					
Approach:	North Bound			South Bound			East Bound			West Bound		
Movement:	L - T - R			L - T - R			L - T - R			L - T - R		
Control:	Permitted			Permitted			Protected			Protected		
Rights:	Include			Include			Include			Include		
Min. Green:	0	0	0	0	0	0	0	0	0	0	0	0
Lanes:	0 1 0	0 1		0 0 1!	0 0		1 0 2	1 0		1 0 2	1 0	
Volume Module:												
Base Vol:	21	0	28	88	1	8	16	1279	10	23	2645	132
Growth Adj:	1.00	1.00	1.00	1.00	1.00	1.00	1.07	1.07	1.07	1.07	1.07	0.00
Initial Bse:	21	0	28	88	1	8	17	1371	11	25	2835	0
Added Vol:	0	0	0	0	0	0	0	199	0	0	132	0
Committed P:	0	0	0	0	0	0	0	56	0	0	95	0
Initial Fut:	21	0	28	88	1	8	17	1626	11	25	3062	0
User Adj:	1.00	1.00	1.00	1.00	1.00	1.00	1.00	1.00	1.00	1.00	1.00	1.00
PHF Adj:	1.00	1.00	1.00	1.00	1.00	1.00	1.00	1.00	1.00	1.00	1.00	1.00
PHF Volume:	21	0	28	88	1	8	17	1626	11	25	3062	0
Reduct Vol:	0	0	0	0	0	0	0	0	0	0	0	0
Reduced Vol:	21	0	28	88	1	8	17	1626	11	25	3062	0
PCE Adj:	1.00	1.00	1.00	1.00	1.00	1.00	1.00	1.00	1.00	1.00	1.00	1.00
MLF Adj:	1.00	1.00	1.00	1.00	1.00	1.00	1.00	1.00	1.00	1.00	1.00	1.00
FinalVolume:	21	0	28	88	1	8	17	1626	11	25	3062	0
Saturation Flow Module:												
Sat/Lane:	1600	1600	1600	1600	1600	1600	1600	1600	1600	1600	1600	1600
Adjustment:	1.00	1.00	1.00	1.00	1.00	1.00	1.00	1.00	1.00	1.00	1.00	1.00
Lanes:	1.00	0.00	1.00	0.91	0.01	0.08	1.00	2.98	0.02	1.00	3.00	0.00
Final Sat.:	1600	0	1600	1452	16	132	1600	4769	31	1600	4800	0
Capacity Analysis Module:												
Vol/Sat:	0.01	0.00	0.02	0.06	0.06	0.06	0.01	0.34	0.34	0.02	0.64	0.00
Crit Moves:			****	****			****				****	

Newport Banning Ranch
Year 2016 with Project - TPO Analysis
PM Peak Hour

Level Of Service Computation Report
ICU 1(Loss as Cycle Length %) Method (Future Volume Alternative)

Intersection #8 W. Coast Hwy/Superior Ave

Cycle (sec):	120	Critical Vol./Cap.(X):	0.650
Loss Time (sec):	0 (Y+R=4.0 sec)	Average Delay (sec/veh):	xxxxxx
Optimal Cycle:	65	Level Of Service:	B

Street Name:	Superior Avenue						W. Coast Highway					
Approach:	North Bound			South Bound			East Bound			West Bound		
Movement:	L - T - R			L - T - R			L - T - R			L - T - R		
Control:	Split Phase			Split Phase			Protected			Protected		
Rights:	Include			Ovl			Include			Include		
Min. Green:	0	0	0	0	0	0	0	0	0	0	0	0
Lanes:	1 1 0	1 0		1 1 1	0 2		2 0	3 0 1		1 0	3 1 0	
Volume Module:												
Base Vol:	254	208	78	228	243	710	258	986	243	226	1854	162
Growth Adj:	1.00	1.00	1.00	1.00	1.00	1.00	1.07	1.07	1.07	1.07	1.07	1.07
Initial Bse:	254	208	78	228	243	710	277	1057	260	242	1987	174
Added Vol:	56	0	0	0	0	-350	-130	77	36	0	121	0
Committed P:	0	8	1	0	14	55	32	36	3	0	67	0
Initial Fut:	310	216	79	228	257	415	179	1170	299	242	2175	174
User Adj:	1.00	1.00	1.00	1.00	1.00	1.00	1.00	1.00	1.00	1.00	1.00	1.00
PHF Adj:	1.00	1.00	1.00	1.00	1.00	1.00	1.00	1.00	1.00	1.00	1.00	1.00
PHF Volume:	310	216	79	228	257	415	179	1170	299	242	2175	174
Reduct Vol:	0	0	0	0	0	0	0	0	0	0	0	0
Reduced Vol:	310	216	79	228	257	415	179	1170	299	242	2175	174
PCE Adj:	1.00	1.00	1.00	1.00	1.00	1.00	1.00	1.00	1.00	1.00	1.00	1.00
MLF Adj:	1.00	1.00	1.00	1.00	1.00	1.00	1.00	1.00	1.00	1.00	1.00	1.00
FinalVolume:	310	216	79	228	257	415	179	1170	299	242	2175	174
OvlAdjVol:						236						
Saturation Flow Module:												
Sat/Lane:	1600	1600	1600	1600	1600	1600	1600	1600	1600	1600	1600	1600
Adjustment:	1.00	1.00	1.00	1.00	1.00	1.00	1.00	1.00	1.00	1.00	1.00	1.00
Lanes:	1.54	1.07	0.39	1.41	1.59	2.00	2.00	3.00	1.00	1.00	3.70	0.30
Final Sat.:	2462	1712	625	2256	2544	3200	3200	4800	1600	1600	5927	473
Capacity Analysis Module:												
Vol/Sat:	0.13	0.13	0.13	0.10	0.10	0.13	0.06	0.24	0.19	0.15	0.37	0.37
OvlAdjV/S:						0.07						
Crit Moves:			****		****		****				****	

Newport Banning Ranch
Year 2016 with Project - TPO Analysis
PM Peak Hour

Level Of Service Computation Report
ICU 1(Loss as Cycle Length %) Method (Future Volume Alternative)

Intersection #9 Newport Blvd/W. Coast Hwy

Cycle (sec):	120	Critical Vol./Cap.(X):	0.728
Loss Time (sec):	0 (Y+R=4.0 sec)	Average Delay (sec/veh):	xxxxxx
Optimal Cycle:	84	Level Of Service:	C

Street Name:	Newport Boulevard						W. Coast Highway					
Approach:	North Bound			South Bound			East Bound			West Bound		
Movement:	L - T - R			L - T - R			L - T - R			L - T - R		
Control:	Protected			Protected			Protected			Protected		
Rights:	Include			Include			Ignore			Ignore		
Min. Green:	0	0	0	0	0	0	0	0	0	0	0	0
Lanes:	0 0 0 0 0			2 0 0 0 1			0 0 2 0 1			0 0 3 0 1		
Volume Module:												
Base Vol:	0	0	0	586	0	393	0	1261	159	0	1823	487
Growth Adj:	1.00	1.00	1.00	1.00	1.00	1.00	1.00	1.07	1.07	1.00	1.07	1.07
Initial Bse:	0	0	0	586	0	393	0	1352	170	0	1954	522
Added Vol:	0	0	0	0	0	0	0	77	0	0	121	0
Committed P:	0	0	0	44	0	19	0	76	7	0	26	0
Initial Fut:	0	0	0	630	0	412	0	1505	177	0	2101	522
User Adj:	1.00	1.00	1.00	1.00	1.00	1.00	1.00	1.00	0.00	1.00	1.00	0.00
PHF Adj:	1.00	1.00	1.00	1.00	1.00	1.00	1.00	1.00	0.00	1.00	1.00	0.00
PHF Volume:	0	0	0	630	0	412	0	1505	0	0	2101	0
Reduct Vol:	0	0	0	0	0	0	0	0	0	0	0	0
Reduced Vol:	0	0	0	630	0	412	0	1505	0	0	2101	0
PCE Adj:	1.00	1.00	1.00	1.00	1.00	1.00	1.00	1.00	0.00	1.00	1.00	0.00
MLF Adj:	1.00	1.00	1.00	1.00	1.00	1.00	1.00	1.00	0.00	1.00	1.00	0.00
FinalVolume:	0	0	0	630	0	412	0	1505	0	0	2101	0
Saturation Flow Module:												
Sat/Lane:	1600	1600	1600	1600	1600	1600	1600	1600	1600	1600	1600	1600
Adjustment:	1.00	1.00	1.00	1.00	1.00	1.00	1.00	1.00	1.00	1.00	1.00	1.00
Lanes:	0.00	0.00	0.00	2.00	0.00	1.00	0.00	2.00	1.00	0.00	3.00	1.00
Final Sat.:	0	0	0	3200	0	1600	0	3200	1600	0	4800	1600
Capacity Analysis Module:												
Vol/Sat:	0.00	0.00	0.00	0.20	0.00	0.26	0.00	0.47	0.00	0.00	0.44	0.00
Crit Moves:						****		****		****		

Newport Banning Ranch
Year 2016 with Project - TPO Analysis
PM Peak Hour

Level Of Service Computation Report
ICU 1(Loss as Cycle Length %) Method (Future Volume Alternative)

Intersection #10 Riverside Ave/W. Coast Hwy

Cycle (sec):	120	Critical Vol./Cap.(X):	0.809
Loss Time (sec):	0 (Y+R=4.0 sec)	Average Delay (sec/veh):	xxxxxx
Optimal Cycle:	97	Level Of Service:	D

Street Name:	Riverside Avenue						W. Coast Highway					
Approach:	North Bound			South Bound			East Bound			West Bound		
Movement:	L - T - R			L - T - R			L - T - R			L - T - R		
Control:	Permitted			Permitted			Protected			Protected		
Rights:	Include			Ovl			Include			Include		
Min. Green:	0	0	0	0	0	0	0	0	0	0	0	0
Lanes:	0 0	1! 0	0	0 1	0 0	1	1 0	1 1	0	1 0	3 0	1
Volume Module:												
Base Vol:	10	11	2	98	2	404	244	1373	5	11	2155	70
Growth Adj:	1.00	1.00	1.00	1.00	1.00	1.00	1.07	1.07	1.07	1.07	1.07	1.07
Initial Bse:	10	11	2	98	2	404	262	1472	5	12	2310	75
Added Vol:	0	0	0	0	0	35	20	57	0	0	86	0
Committed P:	0	0	0	2	0	0	0	138	0	0	139	3
Initial Fut:	10	11	2	100	2	439	282	1667	5	12	2535	78
User Adj:	1.00	1.00	1.00	1.00	1.00	1.00	1.00	1.00	1.00	1.00	1.00	1.00
PHF Adj:	1.00	1.00	1.00	1.00	1.00	1.00	1.00	1.00	1.00	1.00	1.00	1.00
PHF Volume:	10	11	2	100	2	439	282	1667	5	12	2535	78
Reduct Vol:	0	0	0	0	0	0	0	0	0	0	0	0
Reduced Vol:	10	11	2	100	2	439	282	1667	5	12	2535	78
PCE Adj:	1.00	1.00	1.00	1.00	1.00	1.00	1.00	1.00	1.00	1.00	1.00	1.00
MLF Adj:	1.00	1.00	1.00	1.00	1.00	1.00	1.00	1.00	1.00	1.00	1.00	1.00
FinalVolume:	10	11	2	100	2	439	282	1667	5	12	2535	78
OvlAdjVol:						157						
Saturation Flow Module:												
Sat/Lane:	1600	1600	1600	1600	1600	1600	1600	1600	1600	1600	1600	1600
Adjustment:	1.00	1.00	1.00	1.00	1.00	1.00	1.00	1.00	1.00	1.00	1.00	1.00
Lanes:	0.43	0.48	0.09	0.98	0.02	1.00	1.00	1.99	0.01	1.00	3.00	1.00
Final Sat.:	696	765	139	1569	31	1600	1600	3190	10	1600	4800	1600
Capacity Analysis Module:												
Vol/Sat:	0.01	0.01	0.01	0.06	0.06	0.27	0.18	0.52	0.52	0.01	0.53	0.05
OvlAdjV/S:						0.10						
Crit Moves:	****					****	****				****	

Newport Banning Ranch
Year 2016 with Project - TPO Analysis
PM Peak Hour

Level Of Service Computation Report
ICU 1(Loss as Cycle Length %) Method (Future Volume Alternative)

Intersection #11 Tustin Ave/W. Coast Hwy

Cycle (sec):	120	Critical Vol./Cap.(X):	0.680
Loss Time (sec):	0 (Y+R=4.0 sec)	Average Delay (sec/veh):	xxxxxx
Optimal Cycle:	58	Level Of Service:	B

Street Name:	Tustin Avenue						W. Coast Highway					
Approach:	North Bound			South Bound			East Bound			West Bound		
Movement:	L - T - R			L - T - R			L - T - R			L - T - R		
Control:	Permitted			Permitted			Protected			Permitted		
Rights:	Include			Include			Include			Include		
Min. Green:	0	0	0	0	0	0	0	0	0	0	0	0
Lanes:	0 0 0 1 0			0 0 1! 0 0			1 0 1 1 0			0 0 3 0 1		
Volume Module:												
Base Vol:	0	1	2	55	0	27	94	1376	20	0	2230	52
Growth Adj:	1.00	1.00	1.00	1.00	1.00	1.00	1.07	1.07	1.07	1.07	1.07	1.07
Initial Bse:	0	1	2	55	0	27	101	1475	21	0	2391	56
Added Vol:	0	0	0	0	0	23	17	40	0	0	63	0
Committed P:	0	0	0	0	0	0	0	140	0	0	143	0
Initial Fut:	0	1	2	55	0	50	118	1655	21	0	2597	56
User Adj:	1.00	1.00	1.00	1.00	1.00	1.00	1.00	1.00	1.00	1.00	1.00	1.00
PHF Adj:	1.00	1.00	1.00	1.00	1.00	1.00	1.00	1.00	1.00	1.00	1.00	1.00
PHF Volume:	0	1	2	55	0	50	118	1655	21	0	2597	56
Reduct Vol:	0	0	0	0	0	0	0	0	0	0	0	0
Reduced Vol:	0	1	2	55	0	50	118	1655	21	0	2597	56
PCE Adj:	1.00	1.00	1.00	1.00	1.00	1.00	1.00	1.00	1.00	1.00	1.00	1.00
MLF Adj:	1.00	1.00	1.00	1.00	1.00	1.00	1.00	1.00	1.00	1.00	1.00	1.00
FinalVolume:	0	1	2	55	0	50	118	1655	21	0	2597	56
Saturation Flow Module:												
Sat/Lane:	1600	1600	1600	1600	1600	1600	1600	1600	1600	1600	1600	1600
Adjustment:	1.00	1.00	1.00	1.00	1.00	1.00	1.00	1.00	1.00	1.00	1.00	1.00
Lanes:	0.00	0.33	0.67	0.52	0.00	0.48	1.00	1.97	0.03	0.00	3.00	1.00
Final Sat.:	0	533	1067	838	0	762	1600	3159	41	0	4800	1600
Capacity Analysis Module:												
Vol/Sat:	0.00	0.00	0.00	0.03	0.00	0.07	0.07	0.52	0.52	0.00	0.54	0.03
Crit Moves:	****					****	****				****	

Newport Banning Ranch
Year 2016 with Project - TPO Analysis
PM Peak Hour

Level Of Service Computation Report
ICU 1(Loss as Cycle Length %) Method (Future Volume Alternative)

Intersection #12 Dover Dr/W. Coast Hwy

Cycle (sec):	120	Critical Vol./Cap.(X):	0.797
Loss Time (sec):	0 (Y+R=4.0 sec)	Average Delay (sec/veh):	xxxxxx
Optimal Cycle:	113	Level Of Service:	C

Street Name:	Dover Drive						W. Coast Highway					
Approach:	North Bound			South Bound			East Bound			West Bound		
Movement:	L - T - R			L - T - R			L - T - R			L - T - R		
Control:	Split Phase			Split Phase			Protected			Protected		
Rights:	Include			Include			Include			Ignore		
Min. Green:	0	0	0	0	0	0	0	0	0	0	0	0
Lanes:	1 0 1	1 0		3 0 1	0 1		2 0 2	1 0		1 0 3	0 1	
Volume Module:												
Base Vol:	35	42	41	918	61	119	145	1270	25	50	2153	1021
Growth Adj:	1.00	1.00	1.00	1.00	1.00	1.00	1.07	1.07	1.07	1.07	1.07	1.07
Initial Bse:	35	42	41	918	61	119	155	1361	27	54	2308	1095
Added Vol:	0	0	0	0	0	0	0	40	0	0	63	0
Committed P:	0	0	0	3	0	23	34	132	0	0	127	12
Initial Fut:	35	42	41	921	61	142	189	1533	27	54	2498	1107
User Adj:	1.00	1.00	1.00	1.00	1.00	1.00	1.00	1.00	1.00	1.00	1.00	0.00
PHF Adj:	1.00	1.00	1.00	1.00	1.00	1.00	1.00	1.00	1.00	1.00	1.00	0.00
PHF Volume:	35	42	41	921	61	142	189	1533	27	54	2498	0
Reduct Vol:	0	0	0	0	0	0	0	0	0	0	0	0
Reduced Vol:	35	42	41	921	61	142	189	1533	27	54	2498	0
PCE Adj:	1.00	1.00	1.00	1.00	1.00	1.00	1.00	1.00	1.00	1.00	1.00	0.00
MLF Adj:	1.00	1.00	1.00	1.00	1.00	1.00	1.00	1.00	1.00	1.00	1.00	0.00
FinalVolume:	35	42	41	921	61	142	189	1533	27	54	2498	0
Saturation Flow Module:												
Sat/Lane:	1600	1600	1600	1600	1600	1600	1600	1600	1600	1600	1600	1600
Adjustment:	1.00	1.00	1.00	1.00	1.00	1.00	1.00	1.00	1.00	1.00	1.00	1.00
Lanes:	1.00	1.01	0.99	3.00	1.00	1.00	2.00	2.95	0.05	1.00	3.00	1.00
Final Sat.:	1600	1619	1581	4800	1600	1600	3200	4718	82	1600	4800	1600
Capacity Analysis Module:												
Vol/Sat:	0.02	0.03	0.03	0.19	0.04	0.09	0.06	0.33	0.33	0.03	0.52	0.00
Crit Moves:			****	****			****				****	

Newport Banning Ranch
Year 2016 with Project - TPO Analysis
PM Peak Hour

Level Of Service Computation Report
ICU 1(Loss as Cycle Length %) Method (Future Volume Alternative)

Intersection #13 Magnolia St/Hamilton Ave

Cycle (sec):	100	Critical Vol./Cap.(X):	0.594
Loss Time (sec):	5 (Y+R=4.0 sec)	Average Delay (sec/veh):	xxxxxx
Optimal Cycle:	29	Level Of Service:	A

Street Name:	Magnolia Street						Hamilton Avenue					
Approach:	North Bound			South Bound			East Bound			West Bound		
Movement:	L - T - R			L - T - R			L - T - R			L - T - R		
Control:	Prot+Permit			Prot+Permit			Permitted			Permitted		
Rights:	Include			Include			Include			Include		
Min. Green:	0	0	0	0	0	0	0	0	0	0	0	0
Lanes:	1 0 1	1 0		1 0 2	0 1		1 0 0	1 0		1 0 1	0 1	
Volume Module:												
Base Vol:	100	365	55	192	247	25	9	188	71	71	413	379
Growth Adj:	1.07	1.07	1.07	1.07	1.07	1.07	1.07	1.07	1.07	1.07	1.07	1.07
Initial Bse:	107	391	59	206	265	27	10	202	76	76	443	406
Added Vol:	21	17	0	18	31	0	0	15	34	0	12	15
Committed P:	4	6	0	0	5	0	0	0	2	0	0	0
Initial Fut:	132	414	59	224	301	27	10	217	112	76	455	421
User Adj:	1.00	1.00	1.00	1.00	1.00	1.00	1.00	1.00	1.00	1.00	1.00	1.00
PHF Adj:	1.00	1.00	1.00	1.00	1.00	1.00	1.00	1.00	1.00	1.00	1.00	1.00
PHF Volume:	132	414	59	224	301	27	10	217	112	76	455	421
Reduct Vol:	0	0	0	0	0	0	0	0	0	0	0	0
Reduced Vol:	132	414	59	224	301	27	10	217	112	76	455	421
PCE Adj:	1.00	1.00	1.00	1.00	1.00	1.00	1.00	1.00	1.00	1.00	1.00	1.00
MLF Adj:	1.00	1.00	1.00	1.00	1.00	1.00	1.00	1.00	1.00	1.00	1.00	1.00
FinalVolume:	132	414	59	224	301	27	10	217	112	76	455	421
Saturation Flow Module:												
Sat/Lane:	1600	1600	1600	1600	1600	1600	1600	1600	1600	1600	1600	1600
Adjustment:	1.06	1.06	1.06	1.06	1.06	1.06	1.06	1.06	1.06	1.06	1.06	1.06
Lanes:	1.00	1.75	0.25	1.00	2.00	1.00	1.00	0.66	0.34	1.00	1.00	1.00
Final Sat.:	1700	2976	424	1700	3400	1700	1700	1120	580	1700	1700	1700
Capacity Analysis Module:												
Vol/Sat:	0.08	0.14	0.14	0.13	0.09	0.02	0.01	0.19	0.19	0.04	0.27	0.25
Crit Moves:		****		****			****				****	

Newport Banning Ranch
Year 2016 with Project - TPO Analysis
PM Peak Hour

Level Of Service Computation Report
ICU 1(Loss as Cycle Length %) Method (Future Volume Alternative)

Intersection #14 Bushard St/Hamilton Ave

Cycle (sec):	100	Critical Vol./Cap.(X):	0.570
Loss Time (sec):	5 (Y+R=4.0 sec)	Average Delay (sec/veh):	xxxxxx
Optimal Cycle:	27	Level Of Service:	A

Street Name:	Bushard Street						Hamilton Avenue					
Approach:	North Bound			South Bound			East Bound			West Bound		
Movement:	L - T - R			L - T - R			L - T - R			L - T - R		
Control:	Permitted			Permitted			Permitted			Permitted		
Rights:	Include			Include			Include			Include		
Min. Green:	0	0	0	0	0	0	0	0	0	0	0	0
Lanes:	1 0 1	1 0		1 0 1	1 0		1 0 1	1 0		1 0 1	1 0	
Volume Module:												
Base Vol:	55	265	43	117	143	39	26	355	43	44	779	251
Growth Adj:	1.07	1.07	1.07	1.07	1.07	1.07	1.07	1.07	1.07	1.07	1.07	1.07
Initial Bse:	59	284	46	125	153	42	28	381	46	47	835	269
Added Vol:	0	0	0	0	0	0	0	33	0	0	27	0
Committed P:	0	0	0	0	0	0	0	0	0	0	0	0
Initial Fut:	59	284	46	125	153	42	28	414	46	47	862	269
User Adj:	1.00	1.00	1.00	1.00	1.00	1.00	1.00	1.00	1.00	1.00	1.00	1.00
PHF Adj:	1.00	1.00	1.00	1.00	1.00	1.00	1.00	1.00	1.00	1.00	1.00	1.00
PHF Volume:	59	284	46	125	153	42	28	414	46	47	862	269
Reduct Vol:	0	0	0	0	0	0	0	0	0	0	0	0
Reduced Vol:	59	284	46	125	153	42	28	414	46	47	862	269
PCE Adj:	1.00	1.00	1.00	1.00	1.00	1.00	1.00	1.00	1.00	1.00	1.00	1.00
MLF Adj:	1.00	1.00	1.00	1.00	1.00	1.00	1.00	1.00	1.00	1.00	1.00	1.00
FinalVolume:	59	284	46	125	153	42	28	414	46	47	862	269
Saturation Flow Module:												
Sat/Lane:	1600	1600	1600	1600	1600	1600	1600	1600	1600	1600	1600	1600
Adjustment:	1.06	1.06	1.06	1.06	1.06	1.06	1.06	1.06	1.06	1.06	1.06	1.06
Lanes:	1.00	1.72	0.28	1.00	1.57	0.43	1.00	1.80	0.20	1.00	1.52	0.48
Final Sat.:	1700	2925	475	1700	2671	729	1700	3059	341	1700	2591	809
Capacity Analysis Module:												
Vol/Sat:	0.03	0.10	0.10	0.07	0.06	0.06	0.02	0.14	0.14	0.03	0.33	0.33
Crit Moves:		****		****			****				****	

Newport Banning Ranch
Year 2016 with Project - TPO Analysis
PM Peak Hour

Level Of Service Computation Report
ICU 1(Loss as Cycle Length %) Method (Future Volume Alternative)

Intersection #15 Brookhurst St/Hamilton Ave (Victoria St)

Cycle (sec):	100	Critical Vol./Cap.(X):	0.684
Loss Time (sec):	5 (Y+R=4.0 sec)	Average Delay (sec/veh):	xxxxxx
Optimal Cycle:	36	Level Of Service:	B

Street Name:	Brookhurst						Hamilton Avenue (Victoria Street)					
Approach:	North Bound			South Bound			East Bound			West Bound		
Movement:	L - T - R			L - T - R			L - T - R			L - T - R		
Control:	Protected			Protected			Prot+Permit			Prot+Permit		
Rights:	Include			Include			Include			Include		
Min. Green:	0	0	0	0	0	0	0	0	0	0	0	0
Lanes:	1 0 3 0 1			2 0 2 1 0			1 0 1 1 0			1 0 2 0 1		
Volume Module:												
Base Vol:	117	581	192	397	335	106	113	353	67	277	943	489
Growth Adj:	1.07	1.07	1.07	1.07	1.07	1.07	1.07	1.07	1.07	1.07	1.07	1.07
Initial Bse:	125	623	206	426	359	114	121	378	72	297	1011	524
Added Vol:	27	32	0	0	49	0	0	0	33	0	0	0
Committed P:	0	5	0	0	0	0	0	0	0	0	0	0
Initial Fut:	152	660	206	426	408	114	121	378	105	297	1011	524
User Adj:	1.00	1.00	1.00	1.00	1.00	1.00	1.00	1.00	1.00	1.00	1.00	1.00
PHF Adj:	1.00	1.00	1.00	1.00	1.00	1.00	1.00	1.00	1.00	1.00	1.00	1.00
PHF Volume:	152	660	206	426	408	114	121	378	105	297	1011	524
Reduct Vol:	0	0	0	0	0	0	0	0	0	0	0	0
Reduced Vol:	152	660	206	426	408	114	121	378	105	297	1011	524
PCE Adj:	1.00	1.00	1.00	1.00	1.00	1.00	1.00	1.00	1.00	1.00	1.00	1.00
MLF Adj:	1.00	1.00	1.00	1.00	1.00	1.00	1.00	1.00	1.00	1.00	1.00	1.00
FinalVolume:	152	660	206	426	408	114	121	378	105	297	1011	524
Saturation Flow Module:												
Sat/Lane:	1600	1600	1600	1600	1600	1600	1600	1600	1600	1600	1600	1600
Adjustment:	1.06	1.06	1.06	1.06	1.06	1.06	1.06	1.06	1.06	1.06	1.06	1.06
Lanes:	1.00	3.00	1.00	2.00	2.35	0.65	1.00	1.57	0.43	1.00	2.00	1.00
Final Sat.:	1700	5100	1700	3400	3989	1111	1700	2662	738	1700	3400	1700
Capacity Analysis Module:												
Vol/Sat:	0.09	0.13	0.12	0.13	0.10	0.10	0.07	0.14	0.14	0.17	0.30	0.31
Crit Moves:		****		****			****					****

Newport Banning Ranch
Year 2016 with Project - TPO Analysis
PM Peak Hour

Level Of Service Computation Report
ICU 1(Loss as Cycle Length %) Method (Future Volume Alternative)

Intersection #16 Magnolia St/Banning Ave

Cycle (sec):	100	Critical Vol./Cap.(X):	0.306
Loss Time (sec):	5 (Y+R=4.0 sec)	Average Delay (sec/veh):	xxxxxx
Optimal Cycle:	17	Level Of Service:	A

Street Name:	Magnolia Street						Banning Avenue					
Approach:	North Bound			South Bound			East Bound			West Bound		
Movement:	L - T - R			L - T - R			L - T - R			L - T - R		
Control:	Protected			Protected			Split Phase			Split Phase		
Rights:	Include			Include			Include			Include		
Min. Green:	0	0	0	0	0	0	0	0	0	0	0	0
Lanes:	0 0 1	1 0		1 0 2	0 0		0 0 0	0 0		2 0 0	0 1	
Volume Module:												
Base Vol:	0	435	60	76	300	0	0	0	0	23	0	56
Growth Adj:	1.07	1.07	1.07	1.07	1.07	1.07	1.07	1.07	1.07	1.07	1.07	1.07
Initial Bse:	0	466	64	81	322	0	0	0	0	25	0	60
Added Vol:	0	38	0	0	65	0	0	0	0	0	0	0
Committed P:	0	18	0	0	11	0	0	0	0	0	0	0
Initial Fut:	0	522	64	81	398	0	0	0	0	25	0	60
User Adj:	1.00	1.00	1.00	1.00	1.00	1.00	1.00	1.00	1.00	1.00	1.00	1.00
PHF Adj:	1.00	1.00	1.00	1.00	1.00	1.00	1.00	1.00	1.00	1.00	1.00	1.00
PHF Volume:	0	522	64	81	398	0	0	0	0	25	0	60
Reduct Vol:	0	0	0	0	0	0	0	0	0	0	0	0
Reduced Vol:	0	522	64	81	398	0	0	0	0	25	0	60
PCE Adj:	1.00	1.00	1.00	1.00	1.00	1.00	1.00	1.00	1.00	1.00	1.00	1.00
MLF Adj:	1.00	1.00	1.00	1.00	1.00	1.00	1.00	1.00	1.00	1.00	1.00	1.00
FinalVolume:	0	522	64	81	398	0	0	0	0	25	0	60
Saturation Flow Module:												
Sat/Lane:	1600	1600	1600	1600	1600	1600	1600	1600	1600	1600	1600	1600
Adjustment:	1.06	1.06	1.06	1.06	1.06	1.06	1.06	1.06	1.06	1.06	1.06	1.06
Lanes:	0.00	1.78	0.22	1.00	2.00	0.00	0.00	0.00	0.00	2.00	0.00	1.00
Final Sat.:	0	3027	373	1700	3400	0	0	0	0	3400	0	1700
Capacity Analysis Module:												
Vol/Sat:	0.00	0.17	0.17	0.05	0.12	0.00	0.00	0.00	0.00	0.01	0.00	0.04
Crit Moves:		****		****								****

Newport Banning Ranch
Year 2016 with Project - TPO Analysis
PM Peak Hour

Level Of Service Computation Report
2000 HCM 4-Way Stop Method (Future Volume Alternative)

Intersection #17 Bushard St/Banning Ave

Cycle (sec):	100	Critical Vol./Cap.(X):	0.201
Loss Time (sec):	5 (Y+R=4.0 sec)	Average Delay (sec/veh):	9.2
Optimal Cycle:	0	Level Of Service:	A

Street Name:	Bushard Street						Banning Avenue					
Approach:	North Bound			South Bound			East Bound			West Bound		
Movement:	L - T - R			L - T - R			L - T - R			L - T - R		
Control:	Stop Sign			Stop Sign			Stop Sign			Stop Sign		
Rights:	Include			Include			Include			Include		
Min. Green:	0	0	0	0	0	0	0	0	0	0	0	0
Lanes:	1 0 1	1 0		1 0 1	1 0		1 0 0	1 0		1 0 0	1 0	
Volume Module:												
Base Vol:	28	213	23	12	116	38	25	52	10	24	50	21
Growth Adj:	1.07	1.07	1.07	1.07	1.07	1.07	1.07	1.07	1.07	1.07	1.07	1.07
Initial Bse:	30	228	25	13	124	41	27	56	11	26	54	23
Added Vol:	0	0	0	0	0	0	0	0	0	0	0	0
Committed P:	0	3	0	0	2	0	0	0	0	0	0	0
Initial Fut:	30	231	25	13	126	41	27	56	11	26	54	23
User Adj:	1.00	1.00	1.00	1.00	1.00	1.00	1.00	1.00	1.00	1.00	1.00	1.00
PHF Adj:	1.00	1.00	1.00	1.00	1.00	1.00	1.00	1.00	1.00	1.00	1.00	1.00
PHF Volume:	30	231	25	13	126	41	27	56	11	26	54	23
Reduct Vol:	0	0	0	0	0	0	0	0	0	0	0	0
Reduced Vol:	30	231	25	13	126	41	27	56	11	26	54	23
PCE Adj:	1.00	1.00	1.00	1.00	1.00	1.00	1.00	1.00	1.00	1.00	1.00	1.00
MLF Adj:	1.00	1.00	1.00	1.00	1.00	1.00	1.00	1.00	1.00	1.00	1.00	1.00
FinalVolume:	30	231	25	13	126	41	27	56	11	26	54	23
Saturation Flow Module:												
Adjustment:	1.00	1.00	1.00	1.00	1.00	1.00	1.00	1.00	1.00	1.00	1.00	1.00
Lanes:	1.00	1.81	0.19	1.00	1.51	0.49	1.00	0.84	0.16	1.00	0.70	0.30
Final Sat.:	579	1152	124	554	929	311	541	501	96	543	429	180
Capacity Analysis Module:												
Vol/Sat:	0.05	0.20	0.20	0.02	0.14	0.13	0.05	0.11	0.11	0.05	0.13	0.13
Crit Moves:		****			****			****			****	
Delay/Veh:	9.0	9.4	9.3	9.0	9.1	8.8	9.3	9.0	9.0	9.3	9.0	9.0
Delay Adj:	1.00	1.00	1.00	1.00	1.00	1.00	1.00	1.00	1.00	1.00	1.00	1.00
AdjDel/Veh:	9.0	9.4	9.3	9.0	9.1	8.8	9.3	9.0	9.0	9.3	9.0	9.0
LOS by Move:	A	A	A	A	A	A	A	A	A	A	A	A
ApproachDel:		9.4			9.1			9.1			9.1	
Delay Adj:		1.00			1.00			1.00			1.00	
ApprAdjDel:		9.4			9.1			9.1			9.1	
LOS by Appr:		A			A			A			A	
AllWayAvgQ:	0.1	0.2	0.2	0.0	0.1	0.1	0.0	0.1	0.1	0.0	0.1	0.1

Newport Banning Ranch
Year 2016 with Project - TPO Analysis
PM Peak Hour

Note: Queue reported is the number of cars per lane.

Newport Banning Ranch
Year 2016 with Project - TPO Analysis
PM Peak Hour

Level Of Service Computation Report
ICU 1(Loss as Cycle Length %) Method (Future Volume Alternative)

Intersection #18 Brookhurst St/Banning Ave

Cycle (sec):	100	Critical Vol./Cap.(X):	0.264
Loss Time (sec):	5 (Y+R=4.0 sec)	Average Delay (sec/veh):	xxxxxx
Optimal Cycle:	17	Level Of Service:	A

Street Name:	Brookhurst Street						Banning Avenue					
Approach:	North Bound			South Bound			East Bound			West Bound		
Movement:	L - T - R			L - T - R			L - T - R			L - T - R		
Control:	Protected			Protected			Split Phase			Split Phase		
Rights:	Include			Include			Include			Include		
Min. Green:	0	0	0	0	0	0	0	0	0	0	0	0
Lanes:	1 0 3 0 0			0 0 2 1 0			1 0 0 0 1			0 0 0 0 0		
Volume Module:												
Base Vol:	12	769	0	0	509	100	61	0	7	0	0	0
Growth Adj:	1.07	1.07	1.07	1.07	1.07	1.07	1.07	1.07	1.07	1.07	1.07	1.07
Initial Bse:	13	824	0	0	546	107	65	0	8	0	0	0
Added Vol:	0	59	0	0	81	0	0	0	0	0	0	0
Committed P:	0	10	0	0	4	0	0	0	0	0	0	0
Initial Fut:	13	893	0	0	631	107	65	0	8	0	0	0
User Adj:	1.00	1.00	1.00	1.00	1.00	1.00	1.00	1.00	1.00	1.00	1.00	1.00
PHF Adj:	1.00	1.00	1.00	1.00	1.00	1.00	1.00	1.00	1.00	1.00	1.00	1.00
PHF Volume:	13	893	0	0	631	107	65	0	8	0	0	0
Reduct Vol:	0	0	0	0	0	0	0	0	0	0	0	0
Reduced Vol:	13	893	0	0	631	107	65	0	8	0	0	0
PCE Adj:	1.00	1.00	1.00	1.00	1.00	1.00	1.00	1.00	1.00	1.00	1.00	1.00
MLF Adj:	1.00	1.00	1.00	1.00	1.00	1.00	1.00	1.00	1.00	1.00	1.00	1.00
FinalVolume:	13	893	0	0	631	107	65	0	8	0	0	0
Saturation Flow Module:												
Sat/Lane:	1600	1600	1600	1600	1600	1600	1600	1600	1600	1600	1600	1600
Adjustment:	1.06	1.06	1.06	1.06	1.06	1.06	1.06	1.06	1.06	1.06	1.06	1.06
Lanes:	1.00	3.00	0.00	0.00	2.56	0.44	1.00	0.00	1.00	0.00	0.00	0.00
Final Sat.:	1700	5100	0	0	4359	741	1700	0	1700	0	0	0
Capacity Analysis Module:												
Vol/Sat:	0.01	0.18	0.00	0.00	0.14	0.14	0.04	0.00	0.00	0.00	0.00	0.00
Crit Moves:		****		****			****					

Newport Banning Ranch
Year 2016 with Project - TPO Analysis
PM Peak Hour

Level Of Service Computation Report
ICU 1(Loss as Cycle Length %) Method (Future Volume Alternative)

Intersection #19 Magnolia St/PCH

Cycle (sec):	120	Critical Vol./Cap.(X):	0.631
Loss Time (sec):	6 (Y+R=4.0 sec)	Average Delay (sec/veh):	xxxxxx
Optimal Cycle:	34	Level Of Service:	B

Street Name:	Magnolia Street						Pacific Coast Highway					
Approach:	North Bound			South Bound			East Bound			West Bound		
Movement:	L - T - R			L - T - R			L - T - R			L - T - R		
Control:	Split Phase			Split Phase			Protected			Protected		
Rights:	Include			Include			Include			Include		
Min. Green:	0	0	0	0	0	0	0	0	0	0	0	0
Lanes:	1 0 0 1 0			1 1 0 0 1			1 0 3 0 1			1 0 3 0 1		
Volume Module:												
Base Vol:	10	22	15	101	30	152	137	885	17	30	1706	295
Growth Adj:	1.07	1.07	1.07	1.07	1.07	1.07	1.07	1.07	1.07	1.07	1.07	1.07
Initial Bse:	11	24	16	108	32	163	147	949	18	32	1829	316
Added Vol:	0	0	0	65	0	0	0	53	0	0	35	38
Committed P:	0	0	0	11	0	0	0	31	0	0	53	18
Initial Fut:	11	24	16	184	32	163	147	1033	18	32	1917	372
User Adj:	1.00	1.00	1.00	1.00	1.00	1.00	1.00	1.00	1.00	1.00	1.00	1.00
PHF Adj:	1.00	1.00	1.00	1.00	1.00	1.00	1.00	1.00	1.00	1.00	1.00	1.00
PHF Volume:	11	24	16	184	32	163	147	1033	18	32	1917	372
Reduct Vol:	0	0	0	0	0	0	0	0	0	0	0	0
Reduced Vol:	11	24	16	184	32	163	147	1033	18	32	1917	372
PCE Adj:	1.00	1.00	1.00	1.00	1.00	1.00	1.00	1.00	1.00	1.00	1.00	1.00
MLF Adj:	1.00	1.00	1.00	1.00	1.00	1.00	1.00	1.00	1.00	1.00	1.00	1.00
FinalVolume:	11	24	16	184	32	163	147	1033	18	32	1917	372
Saturation Flow Module:												
Sat/Lane:	1600	1600	1600	1600	1600	1600	1600	1600	1600	1600	1600	1600
Adjustment:	1.06	1.06	1.06	1.06	1.06	1.06	1.06	1.06	1.06	1.06	1.06	1.06
Lanes:	1.00	0.59	0.41	1.70	0.30	1.00	1.00	3.00	1.00	1.00	3.00	1.00
Final Sat.:	1700	1011	689	2895	505	1700	1700	5100	1700	1700	5100	1700
Capacity Analysis Module:												
Vol/Sat:	0.01	0.02	0.02	0.06	0.06	0.10	0.09	0.20	0.01	0.02	0.38	0.22
Crit Moves:		****				****	****				****	

Newport Banning Ranch
Year 2016 with Project - TPO Analysis
PM Peak Hour

Level Of Service Computation Report
ICU 1(Loss as Cycle Length %) Method (Future Volume Alternative)

Intersection #20 Brookhurst St/Bushard St

Cycle (sec):	100	Critical Vol./Cap.(X):	0.362
Loss Time (sec):	5 (Y+R=4.0 sec)	Average Delay (sec/veh):	xxxxxx
Optimal Cycle:	19	Level Of Service:	A

Street Name:	Brookhurst Street									Bushard Street								
Approach:	North Bound			South Bound			East Bound			West Bound		
Movement:	L - T - R			L - T - R			L - T - R			L - T - R		
Control:	Protected			Protected			Permitted			Permitted		
Rights:	Include			Include			Include			Include		
Min. Green:	0	0	0	0	0	0	0	0	0	0	0	0
Lanes:	1 0 2	1 0		1 0 3	0 1		1 0 0	0 1		0 0 1!	0 0	
Volume Module:												
Base Vol:	222	662	0	0	430	22	13	0	92	0	0	0
Growth Adj:	1.07	1.07	1.07	1.07	1.07	1.07	1.07	1.07	1.07	1.07	1.07	1.07
Initial Bse:	238	710	0	0	461	24	14	0	99	0	0	0
Added Vol:	0	59	0	0	81	0	0	0	0	0	0	0
Committed P:	6	18	0	0	8	0	0	0	5	0	0	0
Initial Fut:	244	787	0	0	550	24	14	0	104	0	0	0
User Adj:	1.00	1.00	1.00	1.00	1.00	1.00	1.00	1.00	1.00	1.00	1.00	1.00
PHF Adj:	1.00	1.00	1.00	1.00	1.00	1.00	1.00	1.00	1.00	1.00	1.00	1.00
PHF Volume:	244	787	0	0	550	24	14	0	104	0	0	0
Reduct Vol:	0	0	0	0	0	0	0	0	0	0	0	0
Reduced Vol:	244	787	0	0	550	24	14	0	104	0	0	0
PCE Adj:	1.00	1.00	1.00	1.00	1.00	1.00	1.00	1.00	1.00	1.00	1.00	1.00
MLF Adj:	1.00	1.00	1.00	1.00	1.00	1.00	1.00	1.00	1.00	1.00	1.00	1.00
FinalVolume:	244	787	0	0	550	24	14	0	104	0	0	0
Saturation Flow Module:												
Sat/Lane:	1600	1600	1600	1600	1600	1600	1600	1600	1600	1600	1600	1600
Adjustment:	1.06	1.06	1.06	1.06	1.06	1.06	1.06	1.06	1.06	1.06	1.06	1.06
Lanes:	1.00	3.00	0.00	1.00	3.00	1.00	1.00	0.00	1.00	0.00	1.00	0.00
Final Sat.:	1700	5100	0	1700	5100	1700	1700	0	1700	0	1700	0
Capacity Analysis Module:												
Vol/Sat:	0.14	0.15	0.00	0.00	0.11	0.01	0.01	0.00	0.06	0.00	0.00	0.00
Crit Moves:	****				****				****			

Newport Banning Ranch
Year 2016 with Project - TPO Analysis
PM Peak Hour

Level Of Service Computation Report
ICU 1(Loss as Cycle Length %) Method (Future Volume Alternative)

Intersection #21 Brookhurst St/PCH

Cycle (sec):	120	Critical Vol./Cap.(X):	0.742
Loss Time (sec):	6 (Y+R=4.0 sec)	Average Delay (sec/veh):	xxxxxx
Optimal Cycle:	47	Level Of Service:	C

Street Name:	Brookhurst Street						Pacific Coast HIghway					
Approach:	North Bound			South Bound			East Bound			West Bound		
Movement:	L - T - R			L - T - R			L - T - R			L - T - R		
Control:	Split Phase			Split Phase			Protected			Protected		
Rights:	Include			Include			Include			Ovl		
Min. Green:	0	0	0	0	0	0	0	0	0	0	0	0
Lanes:	1 0 0 1 0			2 0 1 0 1			1 0 3 0 1			1 0 3 0 1		
Volume Module:												
Base Vol:	8	23	17	324	6	179	182	797	2	13	1871	757
Growth Adj:	1.07	1.07	1.07	1.07	1.07	1.07	1.07	1.07	1.07	1.07	1.07	1.07
Initial Bse:	9	25	18	347	6	192	195	854	2	14	2006	812
Added Vol:	0	0	0	81	0	0	0	117	0	0	73	59
Committed P:	0	0	0	14	0	0	0	42	0	0	71	24
Initial Fut:	9	25	18	442	6	192	195	1013	2	14	2150	895
User Adj:	1.00	1.00	1.00	1.00	1.00	1.00	1.00	1.00	1.00	1.00	1.00	1.00
PHF Adj:	1.00	1.00	1.00	1.00	1.00	1.00	1.00	1.00	1.00	1.00	1.00	1.00
PHF Volume:	9	25	18	442	6	192	195	1013	2	14	2150	895
Reduct Vol:	0	0	0	0	0	0	0	0	0	0	0	0
Reduced Vol:	9	25	18	442	6	192	195	1013	2	14	2150	895
PCE Adj:	1.00	1.00	1.00	1.00	1.00	1.00	1.00	1.00	1.00	1.00	1.00	1.00
MLF Adj:	1.00	1.00	1.00	1.00	1.00	1.00	1.00	1.00	1.00	1.00	1.00	1.00
FinalVolume:	9	25	18	442	6	192	195	1013	2	14	2150	895
OvlAdjVol:												673
Saturation Flow Module:												
Sat/Lane:	1600	1600	1600	1600	1600	1600	1600	1600	1600	1600	1600	1600
Adjustment:	1.06	1.06	1.06	1.06	1.06	1.06	1.06	1.06	1.06	1.06	1.06	1.06
Lanes:	1.00	0.57	0.43	2.00	1.00	1.00	1.00	3.00	1.00	1.00	3.00	1.00
Final Sat.:	1700	978	723	3400	1700	1700	1700	5100	1700	1700	5100	1700
Capacity Analysis Module:												
Vol/Sat:	0.01	0.03	0.03	0.13	0.00	0.11	0.11	0.20	0.00	0.01	0.42	0.53
OvlAdjV/S:												0.40
Crit Moves:			****	****			****				****	

Newport Banning Ranch
Year 2016 with Project - TPO Analysis
PM Peak Hour

Level Of Service Computation Report
ICU 1(Loss as Cycle Length %) Method (Future Volume Alternative)

Intersection #22 Placentia Ave/Victoria St

Cycle (sec):	100	Critical Vol./Cap.(X):	0.863
Loss Time (sec):	0 (Y+R=4.0 sec)	Average Delay (sec/veh):	xxxxxx
Optimal Cycle:	166	Level Of Service:	D

Street Name:	Placentia Avenue						Victoria Street					
Approach:	North Bound			South Bound			East Bound			West Bound		
Movement:	L - T - R			L - T - R			L - T - R			L - T - R		
Control:	Protected			Protected			Protected			Protected		
Rights:	Include			Include			Ovl			Include		
Min. Green:	0	0	0	0	0	0	0	0	0	0	0	0
Lanes:	2 0 2	0 1		1 0 2	0 1		1 0 2	0 1		1 0 2	0 1	
Volume Module:												
Base Vol:	520	674	157	103	490	152	71	587	306	166	1376	87
Growth Adj:	1.07	1.07	1.07	1.07	1.07	1.07	1.07	1.07	1.07	1.07	1.07	1.07
Initial Bse:	557	723	168	110	525	163	76	629	328	178	1475	93
Added Vol:	0	34	0	0	51	0	0	0	0	0	0	0
Committed P:	0	0	0	0	0	0	0	0	0	0	0	0
Initial Fut:	557	757	168	110	576	163	76	629	328	178	1475	93
User Adj:	1.00	1.00	1.00	1.00	1.00	1.00	1.00	1.00	1.00	1.00	1.00	1.00
PHF Adj:	1.00	1.00	1.00	1.00	1.00	1.00	1.00	1.00	1.00	1.00	1.00	1.00
PHF Volume:	557	757	168	110	576	163	76	629	328	178	1475	93
Reduct Vol:	0	0	0	0	0	0	0	0	0	0	0	0
Reduced Vol:	557	757	168	110	576	163	76	629	328	178	1475	93
PCE Adj:	1.00	1.00	1.00	1.00	1.00	1.00	1.00	1.00	1.00	1.00	1.00	1.00
MLF Adj:	1.00	1.00	1.00	1.00	1.00	1.00	1.00	1.00	1.00	1.00	1.00	1.00
FinalVolume:	557	757	168	110	576	163	76	629	328	178	1475	93
OvlAdjVol:									49			
Saturation Flow Module:												
Sat/Lane:	1600	1600	1600	1600	1600	1600	1600	1600	1600	1600	1600	1600
Adjustment:	1.00	1.00	1.00	1.00	1.00	1.00	1.00	1.00	1.00	1.00	1.00	1.00
Lanes:	2.00	2.00	1.00	1.00	2.00	1.00	1.00	2.00	1.00	1.00	2.00	1.00
Final Sat.:	3200	3200	1600	1600	3200	1600	1600	3200	1600	1600	3200	1600
Capacity Analysis Module:												
Vol/Sat:	0.17	0.24	0.11	0.07	0.18	0.10	0.05	0.20	0.21	0.11	0.46	0.06
OvlAdjV/S:									0.03			
Crit Moves:	****				****		****				****	

Newport Banning Ranch
Year 2016 with Project - TPO Analysis
PM Peak Hour

Level Of Service Computation Report
ICU 1(Loss as Cycle Length %) Method (Future Volume Alternative)

Intersection #23 Pomona Ave/Victoria St

Cycle (sec):	100	Critical Vol./Cap.(X):	0.711
Loss Time (sec):	0 (Y+R=4.0 sec)	Average Delay (sec/veh):	xxxxxx
Optimal Cycle:	50	Level Of Service:	C

Street Name:	Pomona Avenue						Victoria Street					
Approach:	North Bound			South Bound			East Bound			West Bound		
Movement:	L - T - R			L - T - R			L - T - R			L - T - R		
Control:	Permitted			Permitted			Permitted			Permitted		
Rights:	Include			Include			Include			Include		
Min. Green:	0	0	0	0	0	0	0	0	0	0	0	0
Lanes:	1 0 0 1 0			1 0 0 1 0			1 0 2 0 1			1 0 2 0 1		
Volume Module:												
Base Vol:	50	138	119	20	145	28	21	806	79	118	1526	29
Growth Adj:	1.07	1.07	1.07	1.07	1.07	1.07	1.07	1.07	1.07	1.07	1.07	1.07
Initial Bse:	54	148	128	21	155	30	23	864	85	126	1636	31
Added Vol:	0	0	0	0	0	0	0	0	0	0	0	0
Committed P:	0	0	0	0	0	0	0	0	0	0	0	0
Initial Fut:	54	148	128	21	155	30	23	864	85	126	1636	31
User Adj:	1.00	1.00	1.00	1.00	1.00	1.00	1.00	1.00	1.00	1.00	1.00	1.00
PHF Adj:	1.00	1.00	1.00	1.00	1.00	1.00	1.00	1.00	1.00	1.00	1.00	1.00
PHF Volume:	54	148	128	21	155	30	23	864	85	126	1636	31
Reduct Vol:	0	0	0	0	0	0	0	0	0	0	0	0
Reduced Vol:	54	148	128	21	155	30	23	864	85	126	1636	31
PCE Adj:	1.00	1.00	1.00	1.00	1.00	1.00	1.00	1.00	1.00	1.00	1.00	1.00
MLF Adj:	1.00	1.00	1.00	1.00	1.00	1.00	1.00	1.00	1.00	1.00	1.00	1.00
FinalVolume:	54	148	128	21	155	30	23	864	85	126	1636	31
Saturation Flow Module:												
Sat/Lane:	1600	1600	1600	1600	1600	1600	1600	1600	1600	1600	1600	1600
Adjustment:	1.00	1.00	1.00	1.00	1.00	1.00	1.00	1.00	1.00	1.00	1.00	1.00
Lanes:	1.00	0.54	0.46	1.00	0.84	0.16	1.00	2.00	1.00	1.00	2.00	1.00
Final Sat.:	1600	859	741	1600	1341	259	1600	3200	1600	1600	3200	1600
Capacity Analysis Module:												
Vol/Sat:	0.03	0.17	0.17	0.01	0.12	0.12	0.01	0.27	0.05	0.08	0.51	0.02
Crit Moves:		****		****			****				****	

Newport Banning Ranch
Year 2016 with Project - TPO Analysis
PM Peak Hour

Level Of Service Computation Report
ICU 1(Loss as Cycle Length %) Method (Future Volume Alternative)

Intersection #24 Harbor Blvd/Victoria St

Cycle (sec):	100	Critical Vol./Cap.(X):	0.847
Loss Time (sec):	0 (Y+R=4.0 sec)	Average Delay (sec/veh):	xxxxxx
Optimal Cycle:	149	Level Of Service:	D

Street Name:	Harbor Boulevard						Victoria Street					
Approach:	North Bound			South Bound			East Bound			West Bound		
Movement:	L - T - R			L - T - R			L - T - R			L - T - R		
Control:	Protected			Protected			Protected			Protected		
Rights:	Include			Ovl			Include			Include		
Min. Green:	0	0	0	0	0	0	0	0	0	0	0	0
Lanes:	1 0 3 0 1			1 0 3 0 1			2 0 1 1 0			2 0 2 0 1		
Volume Module:												
Base Vol:	118	1081	124	142	1116	294	269	639	80	121	1212	159
Growth Adj:	1.07	1.07	1.07	1.07	1.07	1.07	1.07	1.07	1.07	1.07	1.07	1.07
Initial Bse:	126	1159	133	152	1196	315	288	685	86	130	1299	170
Added Vol:	0	69	0	0	104	0	0	0	0	0	0	0
Committed P:	0	0	0	0	0	0	0	0	0	0	0	0
Initial Fut:	126	1228	133	152	1300	315	288	685	86	130	1299	170
User Adj:	1.00	1.00	1.00	1.00	1.00	1.00	1.00	1.00	1.00	1.00	1.00	1.00
PHF Adj:	1.00	1.00	1.00	1.00	1.00	1.00	1.00	1.00	1.00	1.00	1.00	1.00
PHF Volume:	126	1228	133	152	1300	315	288	685	86	130	1299	170
Reduct Vol:	0	0	0	0	0	0	0	0	0	0	0	0
Reduced Vol:	126	1228	133	152	1300	315	288	685	86	130	1299	170
PCE Adj:	1.00	1.00	1.00	1.00	1.00	1.00	1.00	1.00	1.00	1.00	1.00	1.00
MLF Adj:	1.00	1.00	1.00	1.00	1.00	1.00	1.00	1.00	1.00	1.00	1.00	1.00
FinalVolume:	126	1228	133	152	1300	315	288	685	86	130	1299	170
OvlAdjVol:						171						
Saturation Flow Module:												
Sat/Lane:	1600	1600	1600	1600	1600	1600	1600	1600	1600	1600	1600	1600
Adjustment:	1.00	1.00	1.00	1.00	1.00	1.00	1.00	1.00	1.00	1.00	1.00	1.00
Lanes:	1.00	3.00	1.00	1.00	3.00	1.00	2.00	1.78	0.22	2.00	2.00	1.00
Final Sat.:	1600	4800	1600	1600	4800	1600	3200	2844	356	3200	3200	1600
Capacity Analysis Module:												
Vol/Sat:	0.08	0.26	0.08	0.10	0.27	0.20	0.09	0.24	0.24	0.04	0.41	0.11
OvlAdjV/S:						0.11						
Crit Moves:		****		****			****				****	

Newport Banning Ranch
Year 2016 with Project - TPO Analysis
PM Peak Hour

Level Of Service Computation Report
ICU 1(Loss as Cycle Length %) Method (Future Volume Alternative)

Intersection #25 Newport Blvd/Victoria St [Ramp]

Cycle (sec):	120	Critical Vol./Cap.(X):	0.482
Loss Time (sec):	0 (Y+R=4.0 sec)	Average Delay (sec/veh):	xxxxxx
Optimal Cycle:	36	Level Of Service:	A

Street Name:	Newport Boulevard									Victoria Street								
Approach:	North Bound						South Bound						East Bound						West Bound					
Movement:	L	-	T	-	R		L	-	T	-	R		L	-	T	-	R		L	-	T	-	R	
Control:	Permitted						Permitted						Protected						Protected					
Rights:	Include						Ignore						Include						Include					
Min. Green:	0	0	0				0	0	0				0	0	0				0	0	0			
Lanes:	0	0	0	0	0		1	1	2	0	1		0	0	2	1	0		1	0	1	0	0	
Volume Module:																								
Base Vol:	0	0	0				590	911	1230				0	765	36				77	233	0			
Growth Adj:	1.07	1.07	1.07				1.07	1.07	1.07				1.07	1.07	1.07				1.07	1.07	1.07			
Initial Bse:	0	0	0				632	977	1319				0	820	39				83	250	0			
Added Vol:	0	0	0				0	0	0				0	0	0				0	0	0			
Committed P:	0	0	0				0	0	0				0	0	0				0	0	0			
Initial Fut:	0	0	0				632	977	1319				0	820	39				83	250	0			
User Adj:	1.00	1.00	1.00				1.00	1.00	0.00				1.00	1.00	1.00				1.00	1.00	1.00			
PHF Adj:	1.00	1.00	1.00				1.00	1.00	0.00				1.00	1.00	1.00				1.00	1.00	1.00			
PHF Volume:	0	0	0				632	977	0				0	820	39				83	250	0			
Reduct Vol:	0	0	0				0	0	0				0	0	0				0	0	0			
Reduced Vol:	0	0	0				632	977	0				0	820	39				83	250	0			
PCE Adj:	1.00	1.00	1.00				1.00	1.00	0.00				1.00	1.00	1.00				1.00	1.00	1.00			
MLF Adj:	1.00	1.00	1.00				1.00	1.00	0.00				1.00	1.00	1.00				1.00	1.00	1.00			
FinalVolume:	0	0	0				632	977	0				0	820	39				83	250	0			
Saturation Flow Module:																								
Sat/Lane:	1600	1600	1600				1600	1600	1600				1600	1600	1600				1600	1600	1600			
Adjustment:	1.00	1.00	1.00				1.00	1.00	1.00				1.00	1.00	1.00				1.00	1.00	1.00			
Lanes:	0.00	0.00	0.00				1.57	2.43	1.00				0.00	2.87	0.13				1.00	1.00	0.00			
Final Sat.:	0	0	0				2516	3884	1600				0	4584	216				1600	1600	0			
Capacity Analysis Module:																								
Vol/Sat:	0.00	0.00	0.00				0.25	0.25	0.00				0.00	0.18	0.18				0.05	0.16	0.00			
Crit Moves:							****							****					****					

Newport Banning Ranch
Year 2016 with Project - TPO Analysis
PM Peak Hour

Level Of Service Computation Report
ICU 1(Loss as Cycle Length %) Method (Future Volume Alternative)

Intersection #26 Newport Blvd /Victoria St (22nd St) [Ramp]

Cycle (sec):	120	Critical Vol./Cap.(X):	0.608
Loss Time (sec):	0 (Y+R=4.0 sec)	Average Delay (sec/veh):	xxxxxx
Optimal Cycle:	47	Level Of Service:	B

Street Name:	Newport Boulevard						Victoria Street (22nd Street)					
Approach:	North Bound			South Bound			East Bound			West Bound		
Movement:	L - T - R			L - T - R			L - T - R			L - T - R		
Control:	Permitted			Permitted			Protected			Protected		
Rights:	Include			Include			Include			Include		
Min. Green:	0	0	0	0	0	0	0	0	0	0	0	0
Lanes:	0 1 2	0 1		0 0 0	0 0		2 0 2	0 0		0 0 1	0 1	
Volume Module:												
Base Vol:	109	907	92	0	0	0	734	601	0	0	202	203
Growth Adj:	1.07	1.07	1.07	1.07	1.07	1.07	1.07	1.07	1.07	1.07	1.07	1.07
Initial Bse:	117	972	99	0	0	0	787	644	0	0	217	218
Added Vol:	0	0	0	0	0	0	0	0	0	0	0	0
Committed P:	0	0	0	0	0	0	0	0	0	0	0	0
Initial Fut:	117	972	99	0	0	0	787	644	0	0	217	218
User Adj:	1.00	1.00	1.00	1.00	1.00	1.00	1.00	1.00	1.00	1.00	1.00	1.00
PHF Adj:	1.00	1.00	1.00	1.00	1.00	1.00	1.00	1.00	1.00	1.00	1.00	1.00
PHF Volume:	117	972	99	0	0	0	787	644	0	0	217	218
Reduct Vol:	0	0	0	0	0	0	0	0	0	0	0	0
Reduced Vol:	117	972	99	0	0	0	787	644	0	0	217	218
PCE Adj:	1.00	1.00	1.00	1.00	1.00	1.00	1.00	1.00	1.00	1.00	1.00	1.00
MLF Adj:	1.00	1.00	1.00	1.00	1.00	1.00	1.00	1.00	1.00	1.00	1.00	1.00
FinalVolume:	117	972	99	0	0	0	787	644	0	0	217	218
Saturation Flow Module:												
Sat/Lane:	1600	1600	1600	1600	1600	1600	1600	1600	1600	1600	1600	1600
Adjustment:	1.00	1.00	1.00	1.00	1.00	1.00	1.00	1.00	1.00	1.00	1.00	1.00
Lanes:	0.32	2.68	1.00	0.00	0.00	0.00	2.00	2.00	0.00	0.00	1.00	1.00
Final Sat.:	515	4285	1600	0	0	0	3200	3200	0	0	1600	1600
Capacity Analysis Module:												
Vol/Sat:	0.07	0.23	0.06	0.00	0.00	0.00	0.25	0.20	0.00	0.00	0.14	0.14
Crit Moves:		****					****				****	

Newport Banning Ranch
Year 2016 with Project - TPO Analysis
PM Peak Hour

Level Of Service Computation Report
2000 HCM 4-Way Stop Method (Future Volume Alternative)

Intersection #27 Whittier Ave/19th St

Cycle (sec): 100 Critical Vol./Cap.(X): 0.353
Loss Time (sec): 0 (Y+R=4.0 sec) Average Delay (sec/veh): 10.1
Optimal Cycle: 0 Level Of Service: B

Street Name:	Whittier Avenue						19th St					
Approach:	North Bound			South Bound			East Bound			West Bound		
Movement:	L -	T -	R	L -	T -	R	L -	T -	R	L -	T -	R
Control:	Stop Sign			Stop Sign			Stop Sign			Stop Sign		
Rights:	Include			Include			Include			Include		
Min. Green:	0	0	0	0	0	0	0	0	0	0	0	0
Lanes:	0 0	1! 0	0	0 1	0 0	0	1 0	0 1	0	1 0	0 1	0
Volume Module:												
Base Vol:	32	6	175	17	4	0	1	66	11	146	97	18
Growth Adj:	1.07	1.07	1.07	1.07	1.07	1.07	1.07	1.07	1.07	1.07	1.07	1.07
Initial Bse:	34	6	188	18	4	0	1	71	12	157	104	19
Added Vol:	0	0	0	0	0	0	0	69	0	0	114	0
Committed P:	0	0	0	0	0	0	0	0	0	0	0	0
Initial Fut:	34	6	188	18	4	0	1	140	12	157	218	19
User Adj:	1.00	1.00	1.00	1.00	1.00	1.00	1.00	1.00	1.00	1.00	1.00	1.00
PHF Adj:	1.00	1.00	1.00	1.00	1.00	1.00	1.00	1.00	1.00	1.00	1.00	1.00
PHF Volume:	34	6	188	18	4	0	1	140	12	157	218	19
Reduct Vol:	0	0	0	0	0	0	0	0	0	0	0	0
Reduced Vol:	34	6	188	18	4	0	1	140	12	157	218	19
PCE Adj:	1.00	1.00	1.00	1.00	1.00	1.00	1.00	1.00	1.00	1.00	1.00	1.00
MLF Adj:	1.00	1.00	1.00	1.00	1.00	1.00	1.00	1.00	1.00	1.00	1.00	1.00
FinalVolume:	34	6	188	18	4	0	1	140	12	157	218	19
Saturation Flow Module:												
Adjustment:	1.00	1.00	1.00	1.00	1.00	1.00	1.00	1.00	1.00	1.00	1.00	1.00
Lanes:	0.15	0.03	0.82	0.81	0.19	0.00	1.00	0.92	0.08	1.00	0.92	0.08
Final Sat.:	107	20	587	468	110	0	571	579	49	608	617	55
Capacity Analysis Module:												
Vol/Sat:	0.32	0.32	0.32	0.04	0.04	xxxx	0.00	0.24	0.24	0.26	0.35	0.35
Crit Moves:		****			****			****			****	
Delay/Veh:	9.8	9.8	9.8	8.9	8.9	0.0	8.8	9.8	9.8	10.4	10.6	10.6
Delay Adj:	1.00	1.00	1.00	1.00	1.00	1.00	1.00	1.00	1.00	1.00	1.00	1.00
AdjDel/Veh:	9.8	9.8	9.8	8.9	8.9	0.0	8.8	9.8	9.8	10.4	10.6	10.6
LOS by Move:	A	A	A	A	A	*	A	A	A	B	B	B
ApproachDel:		9.8			8.9			9.8			10.5	
Delay Adj:		1.00			1.00			1.00			1.00	
ApprAdjDel:		9.8			8.9			9.8			10.5	
LOS by Appr:		A			A			A			B	
AllWayAvgQ:	0.4	0.4	0.4	0.0	0.0	0.0	0.0	0.3	0.3	0.3	0.5	0.5

Newport Banning Ranch
Year 2016 with Project - TPO Analysis
PM Peak Hour

Note: Queue reported is the number of cars per lane.

Newport Banning Ranch
Year 2016 with Project - TPO Analysis
PM Peak Hour

Level Of Service Computation Report
2000 HCM 4-Way Stop Method (Future Volume Alternative)

Intersection #28 Monrovia Ave/19th St

Cycle (sec): 100 Critical Vol./Cap.(X): 0.750
Loss Time (sec): 0 (Y+R=4.0 sec) Average Delay (sec/veh): 20.2
Optimal Cycle: 0 Level Of Service: C

Street Name:	Monrovia Avenue						19th Street					
Approach:	North Bound			South Bound			East Bound			West Bound		
Movement:	L - T - R			L - T - R			L - T - R			L - T - R		
Control:	Stop Sign			Stop Sign			Stop Sign			Stop Sign		
Rights:	Include			Include			Include			Include		
Min. Green:	0	0	0	0	0	0	0	0	0	0	0	0
Lanes:	0 1	0 0	1	0 0	1!	0 0	1	0 1	0 1	1	0 1	0 1
Volume Module:												
Base Vol:	14	25	243	50	9	3	6	259	9	124	255	50
Growth Adj:	1.07	1.07	1.07	1.07	1.07	1.07	1.07	1.07	1.07	1.07	1.07	1.07
Initial Bse:	15	27	260	54	10	3	6	278	10	133	273	54
Added Vol:	0	0	2	0	0	0	0	69	0	4	114	0
Committed P:	0	0	0	0	0	0	0	0	0	0	0	0
Initial Fut:	15	27	262	54	10	3	6	347	10	137	387	54
User Adj:	1.00	1.00	1.00	1.00	1.00	1.00	1.00	1.00	1.00	1.00	1.00	1.00
PHF Adj:	1.00	1.00	1.00	1.00	1.00	1.00	1.00	1.00	1.00	1.00	1.00	1.00
PHF Volume:	15	27	262	54	10	3	6	347	10	137	387	54
Reduct Vol:	0	0	0	0	0	0	0	0	0	0	0	0
Reduced Vol:	15	27	262	54	10	3	6	347	10	137	387	54
PCE Adj:	1.00	1.00	1.00	1.00	1.00	1.00	1.00	1.00	1.00	1.00	1.00	1.00
MLF Adj:	1.00	1.00	1.00	1.00	1.00	1.00	1.00	1.00	1.00	1.00	1.00	1.00
FinalVolume:	15	27	262	54	10	3	6	347	10	137	387	54
Saturation Flow Module:												
Adjustment:	1.00	1.00	1.00	1.00	1.00	1.00	1.00	1.00	1.00	1.00	1.00	1.00
Lanes:	0.36	0.64	1.00	0.81	0.14	0.05	1.00	1.00	1.00	1.00	1.00	1.00
Final Sat.:	166	296	528	329	59	20	446	486	525	476	516	562
Capacity Analysis Module:												
Vol/Sat:	0.09	0.09	0.50	0.16	0.16	0.16	0.01	0.71	0.02	0.29	0.75	0.10
Crit Moves:			****		****			****			****	
Delay/Veh:	10.8	10.8	14.9	12.3	12.3	12.3	10.5	24.8	9.3	12.9	26.5	9.5
Delay Adj:	1.00	1.00	1.00	1.00	1.00	1.00	1.00	1.00	1.00	1.00	1.00	1.00
AdjDel/Veh:	10.8	10.8	14.9	12.3	12.3	12.3	10.5	24.8	9.3	12.9	26.5	9.5
LOS by Move:	B	B	B	B	B	B	B	C	A	B	D	A
ApproachDel:	14.4			12.3			24.2			21.7		
Delay Adj:	1.00			1.00			1.00			1.00		
ApprAdjDel:	14.4			12.3			24.2			21.7		
LOS by Appr:	B			B			C			C		
AllWayAvgQ:	0.1	0.1	0.8	0.2	0.2	0.2	0.0	2.0	0.0	0.4	2.4	0.1

Newport Banning Ranch
Year 2016 with Project - TPO Analysis
PM Peak Hour

Note: Queue reported is the number of cars per lane.

Newport Banning Ranch
Year 2016 with Project - TPO Analysis
PM Peak Hour

Level Of Service Computation Report
ICU 1(Loss as Cycle Length %) Method (Future Volume Alternative)

Intersection #29 Placentia Ave/19th St

Cycle (sec):	100	Critical Vol./Cap.(X):	0.758
Loss Time (sec):	0 (Y+R=4.0 sec)	Average Delay (sec/veh):	xxxxxx
Optimal Cycle:	94	Level Of Service:	C

Street Name:	Placentia Avenue						19th Street					
Approach:	North Bound			South Bound			East Bound			West Bound		
Movement:	L - T - R			L - T - R			L - T - R			L - T - R		
Control:	Protected			Protected			Protected			Protected		
Rights:	Include			Include			Include			Include		
Min. Green:	0	0	0	0	0	0	0	0	0	0	0	0
Lanes:	1 0 2	0 1		1 0 1	1 0		2 0 1	1 0		2 0 2	0 1	
Volume Module:												
Base Vol:	49	863	246	206	565	221	306	600	56	248	405	281
Growth Adj:	1.07	1.07	1.07	1.07	1.07	1.07	1.07	1.07	1.07	1.07	1.07	1.07
Initial Bse:	53	925	264	221	606	237	328	643	60	266	434	301
Added Vol:	-8	32	2	0	49	3	2	69	-21	4	115	0
Committed P:	1	5	1	0	0	0	0	0	0	0	0	0
Initial Fut:	46	962	267	221	655	240	330	712	39	270	549	301
User Adj:	1.00	1.00	1.00	1.00	1.00	1.00	1.00	1.00	1.00	1.00	1.00	1.00
PHF Adj:	1.00	1.00	1.00	1.00	1.00	1.00	1.00	1.00	1.00	1.00	1.00	1.00
PHF Volume:	46	962	267	221	655	240	330	712	39	270	549	301
Reduct Vol:	0	0	0	0	0	0	0	0	0	0	0	0
Reduced Vol:	46	962	267	221	655	240	330	712	39	270	549	301
PCE Adj:	1.00	1.00	1.00	1.00	1.00	1.00	1.00	1.00	1.00	1.00	1.00	1.00
MLF Adj:	1.00	1.00	1.00	1.00	1.00	1.00	1.00	1.00	1.00	1.00	1.00	1.00
FinalVolume:	46	962	267	221	655	240	330	712	39	270	549	301
Saturation Flow Module:												
Sat/Lane:	1600	1600	1600	1600	1600	1600	1600	1600	1600	1600	1600	1600
Adjustment:	1.00	1.00	1.00	1.00	1.00	1.00	1.00	1.00	1.00	1.00	1.00	1.00
Lanes:	1.00	2.00	1.00	1.00	1.46	0.54	2.00	1.90	0.10	2.00	2.00	1.00
Final Sat.:	1600	3200	1600	1600	2342	858	3200	3034	166	3200	3200	1600
Capacity Analysis Module:												
Vol/Sat:	0.03	0.30	0.17	0.14	0.28	0.28	0.10	0.23	0.23	0.08	0.17	0.19
Crit Moves:		****		****				****		****		

Newport Banning Ranch
Year 2016 with Project - TPO Analysis
PM Peak Hour

Level Of Service Computation Report
ICU 1(Loss as Cycle Length %) Method (Future Volume Alternative)

Intersection #30 Pomona Ave/19th St

Cycle (sec):	100	Critical Vol./Cap.(X):	0.635
Loss Time (sec):	0 (Y+R=4.0 sec)	Average Delay (sec/veh):	xxxxxx
Optimal Cycle:	63	Level Of Service:	B

Street Name:	Pomona Avenue						19th Street					
Approach:	North Bound			South Bound			East Bound			West Bound		
Movement:	L - T - R			L - T - R			L - T - R			L - T - R		
Control:	Protected			Protected			Prot+Permit			Prot+Permit		
Rights:	Include			Include			Include			Include		
Min. Green:	0	0	0	0	0	0	0	0	0	0	0	0
Lanes:	1 0 0 1 0			1 0 0 1 0			1 0 1 1 0			1 0 1 1 0		
Volume Module:												
Base Vol:	50	125	110	63	98	55	40	922	47	127	809	59
Growth Adj:	1.07	1.07	1.07	1.07	1.07	1.07	1.07	1.07	1.07	1.07	1.07	1.07
Initial Bse:	54	134	118	68	105	59	43	988	50	136	867	63
Added Vol:	0	0	2	0	0	0	0	71	0	4	118	0
Committed P:	0	0	0	0	0	0	0	0	0	0	0	0
Initial Fut:	54	134	120	68	105	59	43	1059	50	140	985	63
User Adj:	1.00	1.00	1.00	1.00	1.00	1.00	1.00	1.00	1.00	1.00	1.00	1.00
PHF Adj:	1.00	1.00	1.00	1.00	1.00	1.00	1.00	1.00	1.00	1.00	1.00	1.00
PHF Volume:	54	134	120	68	105	59	43	1059	50	140	985	63
Reduct Vol:	0	0	0	0	0	0	0	0	0	0	0	0
Reduced Vol:	54	134	120	68	105	59	43	1059	50	140	985	63
PCE Adj:	1.00	1.00	1.00	1.00	1.00	1.00	1.00	1.00	1.00	1.00	1.00	1.00
MLF Adj:	1.00	1.00	1.00	1.00	1.00	1.00	1.00	1.00	1.00	1.00	1.00	1.00
FinalVolume:	54	134	120	68	105	59	43	1059	50	140	985	63
Saturation Flow Module:												
Sat/Lane:	1600	1600	1600	1600	1600	1600	1600	1600	1600	1600	1600	1600
Adjustment:	1.00	1.00	1.00	1.00	1.00	1.00	1.00	1.00	1.00	1.00	1.00	1.00
Lanes:	1.00	0.53	0.47	1.00	0.64	0.36	1.00	1.91	0.09	1.00	1.88	0.12
Final Sat.:	1600	844	756	1600	1025	575	1600	3055	145	1600	3007	193
Capacity Analysis Module:												
Vol/Sat:	0.03	0.16	0.16	0.04	0.10	0.10	0.03	0.35	0.35	0.09	0.33	0.33
Crit Moves:		****		****				****		****		

Newport Banning Ranch
Year 2016 with Project - TPO Analysis
PM Peak Hour

Level Of Service Computation Report
ICU 1(Loss as Cycle Length %) Method (Future Volume Alternative)

Intersection #31 Anaheim Ave/19th St

Cycle (sec):	100	Critical Vol./Cap.(X):	0.607
Loss Time (sec):	0 (Y+R=4.0 sec)	Average Delay (sec/veh):	xxxxxx
Optimal Cycle:	47	Level Of Service:	B

Street Name:	Anaheim Avenue						19th Street					
Approach:	North Bound			South Bound			East Bound			West Bound		
Movement:	L - T - R			L - T - R			L - T - R			L - T - R		
Control:	Permitted			Permitted			Prot+Permit			Prot+Permit		
Rights:	Include			Include			Include			Include		
Min. Green:	0	0	0	0	0	0	0	0	0	0	0	0
Lanes:	1 0 0	1 0		0 1 0	1 0		0 1 0	1 1 0		1 0 2	0 1	
Volume Module:												
Base Vol:	61	60	97	59	48	26	45	1023	53	118	947	109
Growth Adj:	1.07	1.07	1.07	1.07	1.07	1.07	1.07	1.07	1.07	1.07	1.07	1.07
Initial Bse:	65	64	104	63	51	28	48	1097	57	126	1015	117
Added Vol:	0	0	0	0	0	0	0	73	0	0	122	0
Committed P:	0	0	0	0	0	0	0	0	0	0	0	0
Initial Fut:	65	64	104	63	51	28	48	1170	57	126	1137	117
User Adj:	1.00	1.00	1.00	1.00	1.00	1.00	1.00	1.00	1.00	1.00	1.00	1.00
PHF Adj:	1.00	1.00	1.00	1.00	1.00	1.00	1.00	1.00	1.00	1.00	1.00	1.00
PHF Volume:	65	64	104	63	51	28	48	1170	57	126	1137	117
Reduct Vol:	0	0	0	0	0	0	0	0	0	0	0	0
Reduced Vol:	65	64	104	63	51	28	48	1170	57	126	1137	117
PCE Adj:	1.00	1.00	1.00	1.00	1.00	1.00	1.00	1.00	1.00	1.00	1.00	1.00
MLF Adj:	1.00	1.00	1.00	1.00	1.00	1.00	1.00	1.00	1.00	1.00	1.00	1.00
FinalVolume:	65	64	104	63	51	28	48	1170	57	126	1137	117
Saturation Flow Module:												
Sat/Lane:	1600	1600	1600	1600	1600	1600	1600	1600	1600	1600	1600	1600
Adjustment:	1.00	1.00	1.00	1.00	1.00	1.00	1.00	1.00	1.00	1.00	1.00	1.00
Lanes:	1.00	0.38	0.62	1.00	0.65	0.35	1.00	1.91	0.09	1.00	2.00	1.00
Final Sat.:	1600	611	989	1600	1038	562	1600	3052	148	1600	3200	1600
Capacity Analysis Module:												
Vol/Sat:	0.04	0.11	0.11	0.04	0.05	0.05	0.03	0.38	0.38	0.08	0.36	0.07
Crit Moves:		****		****				****		****		

Newport Banning Ranch
Year 2016 with Project - TPO Analysis
PM Peak Hour

Level Of Service Computation Report
ICU 1(Loss as Cycle Length %) Method (Future Volume Alternative)

Intersection #32 Park Ave/19th St

Cycle (sec):	100	Critical Vol./Cap.(X):	0.605
Loss Time (sec):	0 (Y+R=4.0 sec)	Average Delay (sec/veh):	xxxxxx
Optimal Cycle:	47	Level Of Service:	B

Street Name:	Park Avenue						19th St					
Approach:	North Bound			South Bound			East Bound			West Bound		
Movement:	L - T - R			L - T - R			L - T - R			L - T - R		
Control:	Permitted			Permitted			Prot+Permit			Prot+Permit		
Rights:	Include			Include			Include			Include		
Min. Green:	0	0	0	0	0	0	0	0	0	0	0	0
Lanes:	2 0 0 0 1			0 0 0 0 0			1 0 2 0 1			1 0 3 0 0		
Volume Module:												
Base Vol:	119	0	153	0	0	0	20	1069	70	183	1034	0
Growth Adj:	1.07	1.07	1.07	1.07	1.07	1.07	1.07	1.07	1.07	1.07	1.07	1.07
Initial Bse:	128	0	164	0	0	0	21	1146	75	196	1108	0
Added Vol:	0	0	0	0	0	0	0	69	0	0	115	0
Committed P:	0	0	0	0	0	0	0	0	0	0	0	0
Initial Fut:	128	0	164	0	0	0	21	1215	75	196	1223	0
User Adj:	1.00	1.00	1.00	1.00	1.00	1.00	1.00	1.00	1.00	1.00	1.00	1.00
PHF Adj:	1.00	1.00	1.00	1.00	1.00	1.00	1.00	1.00	1.00	1.00	1.00	1.00
PHF Volume:	128	0	164	0	0	0	21	1215	75	196	1223	0
Reduct Vol:	0	0	0	0	0	0	0	0	0	0	0	0
Reduced Vol:	128	0	164	0	0	0	21	1215	75	196	1223	0
PCE Adj:	1.00	1.00	1.00	1.00	1.00	1.00	1.00	1.00	1.00	1.00	1.00	1.00
MLF Adj:	1.00	1.00	1.00	1.00	1.00	1.00	1.00	1.00	1.00	1.00	1.00	1.00
FinalVolume:	128	0	164	0	0	0	21	1215	75	196	1223	0
Saturation Flow Module:												
Sat/Lane:	1600	1600	1600	1600	1600	1600	1600	1600	1600	1600	1600	1600
Adjustment:	1.00	1.00	1.00	1.00	1.00	1.00	1.00	1.00	1.00	1.00	1.00	1.00
Lanes:	2.00	0.00	1.00	0.00	0.00	0.00	1.00	2.00	1.00	1.00	3.00	0.00
Final Sat.:	3200	0	1600	0	0	0	1600	3200	1600	1600	4800	0
Capacity Analysis Module:												
Vol/Sat:	0.04	0.00	0.10	0.00	0.00	0.00	0.01	0.38	0.05	0.12	0.25	0.00
Crit Moves:			****					****		****		

Newport Banning Ranch
Year 2016 with Project - TPO Analysis
PM Peak Hour

Level Of Service Computation Report
ICU 1(Loss as Cycle Length %) Method (Future Volume Alternative)

Intersection #33 Harbor Blvd/19th St

Cycle (sec):	100	Critical Vol./Cap.(X):	0.647
Loss Time (sec):	0 (Y+R=4.0 sec)	Average Delay (sec/veh):	xxxxxx
Optimal Cycle:	65	Level Of Service:	B

Street Name:	Harbor Boulevard						19th Street					
Approach:	North Bound			South Bound			East Bound			West Bound		
Movement:	L - T - R			L - T - R			L - T - R			L - T - R		
Control:	Protected			Protected			Protected			Protected		
Rights:	Include			Include			Include			Include		
Min. Green:	0	0	0	0	0	0	0	0	0	0	0	0
Lanes:	1 0 2	1 0		1 0 2	0 1		2 0 2	1 0		1 0 3	0 1	
Volume Module:												
Base Vol:	75	453	23	183	614	317	481	749	65	188	791	215
Growth Adj:	1.06	1.06	1.06	1.06	1.06	1.06	1.06	1.06	1.06	1.06	1.06	1.06
Initial Bse:	80	481	24	194	652	336	511	795	69	200	840	228
Added Vol:	0	42	0	0	61	44	27	42	0	0	71	0
Committed P:	3	11	0	0	24	0	0	0	6	0	0	0
Initial Fut:	83	534	24	194	737	380	538	837	75	200	911	228
User Adj:	1.00	1.00	1.00	1.00	1.00	1.00	1.00	1.00	1.00	1.00	1.00	1.00
PHF Adj:	1.00	1.00	1.00	1.00	1.00	1.00	1.00	1.00	1.00	1.00	1.00	1.00
PHF Volume:	83	534	24	194	737	380	538	837	75	200	911	228
Reduct Vol:	0	0	0	0	0	0	0	0	0	0	0	0
Reduced Vol:	83	534	24	194	737	380	538	837	75	200	911	228
PCE Adj:	1.00	1.00	1.00	1.00	1.00	1.00	1.00	1.00	1.00	1.00	1.00	1.00
MLF Adj:	1.00	1.00	1.00	1.00	1.00	1.00	1.00	1.00	1.00	1.00	1.00	1.00
FinalVolume:	83	534	24	194	737	380	538	837	75	200	911	228
Saturation Flow Module:												
Sat/Lane:	1600	1600	1600	1600	1600	1600	1600	1600	1600	1600	1600	1600
Adjustment:	1.00	1.00	1.00	1.00	1.00	1.00	1.00	1.00	1.00	1.00	1.00	1.00
Lanes:	1.00	2.87	0.13	1.00	2.00	1.00	2.00	2.75	0.25	1.00	3.00	1.00
Final Sat.:	1600	4590	210	1600	3200	1600	3200	4405	395	1600	4800	1600
Capacity Analysis Module:												
Vol/Sat:	0.05	0.12	0.12	0.12	0.23	0.24	0.17	0.19	0.19	0.12	0.19	0.14
Crit Moves:	****					****	****				****	

Newport Banning Ranch
Year 2016 with Project - TPO Analysis
PM Peak Hour

Level Of Service Computation Report
ICU 1(Loss as Cycle Length %) Method (Future Volume Alternative)

Intersection #34 Newport Blvd/19th St

Cycle (sec):	120	Critical Vol./Cap.(X):	0.874
Loss Time (sec):	0 (Y+R=4.0 sec)	Average Delay (sec/veh):	xxxxxx
Optimal Cycle:	180	Level Of Service:	D

Street Name:	Newport Boulevard						19th Street					
Approach:	North Bound			South Bound			East Bound			West Bound		
Movement:	L - T - R			L - T - R			L - T - R			L - T - R		
Control:	Protected			Protected			Split Phase			Split Phase		
Rights:	Include			Include			Include			Include		
Min. Green:	0	0	0	0	0	0	0	0	0	0	0	0
Lanes:	1 0 3	1 0		1 0 3	1 1		2 1 1	0 1		1 0 2	1 1	
Volume Module:												
Base Vol:	65	2649	38	202	3114	757	731	171	33	54	321	152
Growth Adj:	1.07	1.07	1.07	1.07	1.07	1.07	1.07	1.07	1.07	1.07	1.07	1.07
Initial Bse:	70	2840	41	217	3338	812	784	183	35	58	344	163
Added Vol:	0	217	0	0	318	71	42	0	0	0	0	0
Committed P:	0	21	0	0	31	0	0	0	11	0	0	0
Initial Fut:	70	3078	41	217	3687	883	826	183	46	58	344	163
User Adj:	1.00	1.00	1.00	1.00	1.00	1.00	1.00	1.00	1.00	1.00	1.00	1.00
PHF Adj:	1.00	1.00	1.00	1.00	1.00	1.00	1.00	1.00	1.00	1.00	1.00	1.00
PHF Volume:	70	3078	41	217	3687	883	826	183	46	58	344	163
Reduct Vol:	0	0	0	0	0	0	0	0	0	0	0	0
Reduced Vol:	70	3078	41	217	3687	883	826	183	46	58	344	163
PCE Adj:	1.00	1.00	1.00	1.00	1.00	1.00	1.00	1.00	1.00	1.00	1.00	1.00
MLF Adj:	1.00	1.00	1.00	1.00	1.00	1.00	1.00	1.00	1.00	1.00	1.00	1.00
FinalVolume:	70	3078	41	217	3687	883	826	183	46	58	344	163
Saturation Flow Module:												
Sat/Lane:	1600	1600	1600	1600	1600	1600	1600	1600	1600	1600	1600	1600
Adjustment:	1.00	1.00	1.00	1.00	1.00	1.00	1.00	1.00	1.00	1.00	1.00	1.00
Lanes:	1.00	3.95	0.05	1.00	4.00	1.00	3.00	1.00	1.00	1.00	2.71	1.29
Final Sat.:	1600	6316	84	1600	6400	1600	4800	1600	1600	1600	4343	2057
Capacity Analysis Module:												
Vol/Sat:	0.04	0.49	0.49	0.14	0.58	0.55	0.17	0.11	0.03	0.04	0.08	0.08
Crit Moves:		****		****			****				****	

Newport Banning Ranch
Year 2016 with Project - TPO Analysis
PM Peak Hour

Level Of Service Computation Report
ICU 1(Loss as Cycle Length %) Method (Future Volume Alternative)

Intersection #35 Newport Blvd/Broadway

Cycle (sec):	120	Critical Vol./Cap.(X):	0.850
Loss Time (sec):	0 (Y+R=4.0 sec)	Average Delay (sec/veh):	xxxxxx
Optimal Cycle:	124	Level Of Service:	D

Street Name:	Newport Boulevard									Broadway								
Approach:	North Bound			South Bound			East Bound			West Bound		
Movement:	L	- T	- R	L	- T	- R	L	- T	- R	L	- T	- R
Control:	Protected			Protected			Permitted			Permitted		
Rights:	Include			Include			Include			Include		
Min. Green:	0	0	0	0	0	0	0	0	0	0	0	0
Lanes:	1 0	3 1	0	1 0	3 0	1	0 1	0 0	1	1 0	0 1	0
Volume Module:												
Base Vol:	7	2542	55	142	3061	62	18	23	14	33	15	95
Growth Adj:	1.07	1.07	1.07	1.07	1.07	1.07	1.07	1.07	1.07	1.07	1.07	1.07
Initial Bse:	8	2725	59	152	3281	66	19	25	15	35	16	102
Added Vol:	0	217	0	0	318	0	0	0	0	0	0	0
Committed P:	0	25	0	0	48	0	0	0	0	0	0	0
Initial Fut:	8	2967	59	152	3647	66	19	25	15	35	16	102
User Adj:	1.00	1.00	1.00	1.00	1.00	1.00	1.00	1.00	1.00	1.00	1.00	1.00
PHF Adj:	1.00	1.00	1.00	1.00	1.00	1.00	1.00	1.00	1.00	1.00	1.00	1.00
PHF Volume:	8	2967	59	152	3647	66	19	25	15	35	16	102
Reduct Vol:	0	0	0	0	0	0	0	0	0	0	0	0
Reduced Vol:	8	2967	59	152	3647	66	19	25	15	35	16	102
PCE Adj:	1.00	1.00	1.00	1.00	1.00	1.00	1.00	1.00	1.00	1.00	1.00	1.00
MLF Adj:	1.00	1.00	1.00	1.00	1.00	1.00	1.00	1.00	1.00	1.00	1.00	1.00
FinalVolume:	8	2967	59	152	3647	66	19	25	15	35	16	102
Saturation Flow Module:												
Sat/Lane:	1600	1600	1600	1600	1600	1600	1600	1600	1600	1600	1600	1600
Adjustment:	1.00	1.00	1.00	1.00	1.00	1.00	1.00	1.00	1.00	1.00	1.00	1.00
Lanes:	1.00	3.92	0.08	1.00	3.00	1.00	0.44	0.56	1.00	1.00	0.14	0.86
Final Sat.:	1600	6275	125	1600	4800	1600	702	898	1600	1600	218	1382
Capacity Analysis Module:												
Vol/Sat:	0.00	0.47	0.47	0.10	0.76	0.04	0.01	0.03	0.01	0.02	0.07	0.07
Crit Moves:	****				****		****				****	

Newport Banning Ranch
Year 2016 with Project - TPO Analysis
PM Peak Hour

Level Of Service Computation Report
ICU 1(Loss as Cycle Length %) Method (Future Volume Alternative)

Intersection #36 Newport Blvd/Harbor Blvd

Cycle (sec):	120	Critical Vol./Cap.(X):	1.141
Loss Time (sec):	0 (Y+R=4.0 sec)	Average Delay (sec/veh):	xxxxxx
Optimal Cycle:	180	Level Of Service:	F

Street Name:	Newport Boulevard						Harbor Boulevard					
Approach:	North Bound			South Bound			East Bound			West Bound		
Movement:	L - T - R			L - T - R			L - T - R			L - T - R		
Control:	Protected			Protected			Protected			Protected		
Rights:	Include			Include			Ovl			Include		
Min. Green:	0	0	0	0	0	0	0	0	0	0	0	0
Lanes:	2 0 4 0 0			0 0 2 1 0			1 0 0 0 2			0 0 0 0 0		
Volume Module:												
Base Vol:	726	2480	0	0	3160	50	123	0	537	0	0	0
Growth Adj:	1.07	1.07	1.07	1.07	1.07	1.07	1.07	1.07	1.07	1.07	1.07	1.07
Initial Bse:	778	2659	0	0	3388	54	132	0	576	0	0	0
Added Vol:	42	217	0	0	318	0	0	0	61	0	0	0
Committed P:	27	28	0	0	51	0	0	0	50	0	0	0
Initial Fut:	847	2904	0	0	3757	54	132	0	687	0	0	0
User Adj:	1.00	1.00	1.00	1.00	1.00	1.00	1.00	1.00	1.00	1.00	1.00	1.00
PHF Adj:	1.00	1.00	1.00	1.00	1.00	1.00	1.00	1.00	1.00	1.00	1.00	1.00
PHF Volume:	847	2904	0	0	3757	54	132	0	687	0	0	0
Reduct Vol:	0	0	0	0	0	0	0	0	0	0	0	0
Reduced Vol:	847	2904	0	0	3757	54	132	0	687	0	0	0
PCE Adj:	1.00	1.00	1.00	1.00	1.00	1.00	1.00	1.00	1.00	1.00	1.00	1.00
MLF Adj:	1.00	1.00	1.00	1.00	1.00	1.00	1.00	1.00	1.00	1.00	1.00	1.00
FinalVolume:	847	2904	0	0	3757	54	132	0	687	0	0	0
OvlAdjVol:									0			
Saturation Flow Module:												
Sat/Lane:	1600	1600	1600	1600	1600	1600	1600	1600	1600	1600	1600	1600
Adjustment:	1.00	1.00	1.00	1.00	1.00	1.00	1.00	1.00	1.00	1.00	1.00	1.00
Lanes:	2.00	4.00	0.00	0.00	2.96	0.04	1.00	0.00	2.00	0.00	0.00	0.00
Final Sat.:	3200	6400	0	0	4732	68	1600	0	3200	0	0	0
Capacity Analysis Module:												
Vol/Sat:	0.26	0.45	0.00	0.00	0.79	0.79	0.08	0.00	0.21	0.00	0.00	0.00
OvlAdjV/S:									0.00			
Crit Moves:	****				****		****					

Newport Banning Ranch
Year 2016 with Project - TPO Analysis
PM Peak Hour

Level Of Service Computation Report
ICU 1(Loss as Cycle Length %) Method (Future Volume Alternative)

Intersection #37 Newport Blvd/18th St (Rochester St)

Cycle (sec):	120	Critical Vol./Cap.(X):	1.153
Loss Time (sec):	0 (Y+R=4.0 sec)	Average Delay (sec/veh):	xxxxxx
Optimal Cycle:	180	Level Of Service:	F

Street Name:	Newport Boulevard						18th Street (Rochester Street)					
Approach:	North Bound			South Bound			East Bound			West Bound		
Movement:	L - T - R			L - T - R			L - T - R			L - T - R		
Control:	Protected			Protected			Split Phase			Split Phase		
Rights:	Include			Include			Include			Include		
Min. Green:	0	0	0	0	0	0	0	0	0	0	0	0
Lanes:	1 0 3	1 0		1 0 3	0 1		2 0 1	0 1		1 0 0	1 0	
Volume Module:												
Base Vol:	111	2724	15	125	3515	144	251	75	48	18	124	22
Growth Adj:	1.07	1.07	1.07	1.07	1.07	1.07	1.07	1.07	1.07	1.07	1.07	1.07
Initial Bse:	119	2920	16	134	3768	154	269	80	51	19	133	24
Added Vol:	0	215	0	0	317	62	44	0	0	0	0	0
Committed P:	14	68	0	0	111	0	0	0	21	0	0	0
Initial Fut:	133	3203	16	134	4196	216	313	80	72	19	133	24
User Adj:	1.00	1.00	1.00	1.00	1.00	1.00	1.00	1.00	1.00	1.00	1.00	1.00
PHF Adj:	1.00	1.00	1.00	1.00	1.00	1.00	1.00	1.00	1.00	1.00	1.00	1.00
PHF Volume:	133	3203	16	134	4196	216	313	80	72	19	133	24
Reduct Vol:	0	0	0	0	0	0	0	0	0	0	0	0
Reduced Vol:	133	3203	16	134	4196	216	313	80	72	19	133	24
PCE Adj:	1.00	1.00	1.00	1.00	1.00	1.00	1.00	1.00	1.00	1.00	1.00	1.00
MLF Adj:	1.00	1.00	1.00	1.00	1.00	1.00	1.00	1.00	1.00	1.00	1.00	1.00
FinalVolume:	133	3203	16	134	4196	216	313	80	72	19	133	24
Saturation Flow Module:												
Sat/Lane:	1600	1600	1600	1600	1600	1600	1600	1600	1600	1600	1600	1600
Adjustment:	1.00	1.00	1.00	1.00	1.00	1.00	1.00	1.00	1.00	1.00	1.00	1.00
Lanes:	1.00	3.98	0.02	1.00	3.00	1.00	2.00	1.00	1.00	1.00	0.85	0.15
Final Sat.:	1600	6368	32	1600	4800	1600	3200	1600	1600	1600	1359	241
Capacity Analysis Module:												
Vol/Sat:	0.08	0.50	0.50	0.08	0.87	0.14	0.10	0.05	0.05	0.01	0.10	0.10
Crit Moves:	****				****		****					****

Newport Banning Ranch
Year 2016 with Project - TPO Analysis
PM Peak Hour

Level Of Service Computation Report
ICU 1(Loss as Cycle Length %) Method (Future Volume Alternative)

Intersection #38 Placentia Ave/18th St

Cycle (sec):	100	Critical Vol./Cap.(X):	0.539
Loss Time (sec):	0 (Y+R=4.0 sec)	Average Delay (sec/veh):	xxxxxx
Optimal Cycle:	40	Level Of Service:	A

Street Name:	Placentia Avenue						18th Street					
Approach:	North Bound			South Bound			East Bound			West Bound		
Movement:	L - T - R			L - T - R			L - T - R			L - T - R		
Control:	Protected			Protected			Permitted			Permitted		
Rights:	Include			Include			Include			Include		
Min. Green:	0	0	0	0	0	0	0	0	0	0	0	0
Lanes:	1 0 1	1 0		1 0 1	1 0		1 0 0	1 0		1 0 0	1 0	
Volume Module:												
Base Vol:	14	889	58	45	523	47	60	169	27	16	87	80
Growth Adj:	1.07	1.07	1.07	1.07	1.07	1.07	1.07	1.07	1.07	1.07	1.07	1.07
Initial Bse:	15	953	62	48	561	50	64	181	29	17	93	86
Added Vol:	0	-10	0	0	-63	0	0	44	0	0	62	0
Committed P:	1	10	1	0	1	0	0	0	0	0	0	0
Initial Fut:	16	953	63	48	499	50	64	225	29	17	155	86
User Adj:	1.00	1.00	1.00	1.00	1.00	1.00	1.00	1.00	1.00	1.00	1.00	1.00
PHF Adj:	1.00	1.00	1.00	1.00	1.00	1.00	1.00	1.00	1.00	1.00	1.00	1.00
PHF Volume:	16	953	63	48	499	50	64	225	29	17	155	86
Reduct Vol:	0	0	0	0	0	0	0	0	0	0	0	0
Reduced Vol:	16	953	63	48	499	50	64	225	29	17	155	86
PCE Adj:	1.00	1.00	1.00	1.00	1.00	1.00	1.00	1.00	1.00	1.00	1.00	1.00
MLF Adj:	1.00	1.00	1.00	1.00	1.00	1.00	1.00	1.00	1.00	1.00	1.00	1.00
FinalVolume:	16	953	63	48	499	50	64	225	29	17	155	86
Saturation Flow Module:												
Sat/Lane:	1600	1600	1600	1600	1600	1600	1600	1600	1600	1600	1600	1600
Adjustment:	1.00	1.00	1.00	1.00	1.00	1.00	1.00	1.00	1.00	1.00	1.00	1.00
Lanes:	1.00	1.88	0.12	1.00	1.82	0.18	1.00	0.89	0.11	1.00	0.64	0.36
Final Sat.:	1600	3001	199	1600	2906	294	1600	1418	182	1600	1031	569
Capacity Analysis Module:												
Vol/Sat:	0.01	0.32	0.32	0.03	0.17	0.17	0.04	0.16	0.16	0.01	0.15	0.15
Crit Moves:		****		****			****				****	

Newport Banning Ranch
Year 2016 with Project - TPO Analysis
PM Peak Hour

Level Of Service Computation Report
2000 HCM 4-Way Stop Method (Future Volume Alternative)

Intersection #39 Whittier Ave/17th St

Cycle (sec):	100	Critical Vol./Cap.(X):	0.543
Loss Time (sec):	0 (Y+R=4.0 sec)	Average Delay (sec/veh):	11.2
Optimal Cycle:	0	Level Of Service:	B

Street Name:	Whittier Avenue						17th St					
Approach:	North Bound			South Bound			East Bound			West Bound		
Movement:	L -	T -	R	L -	T -	R	L -	T -	R	L -	T -	R
Control:	Stop Sign			Stop Sign			Stop Sign			Stop Sign		
Rights:	Include			Include			Include			Include		
Min. Green:	0	0	0	0	0	0	0	0	0	0	0	0
Lanes:	0 0	0 1	0	0 0	1! 0	0	0 1	0 0	0	0 0	1! 0	0
Volume Module:												
Base Vol:	0	11	8	62	9	3	2	14	0	14	9	83
Growth Adj:	1.07	1.07	1.07	1.07	1.07	1.07	1.07	1.07	1.07	1.07	1.07	1.07
Initial Bse:	0	12	9	66	10	3	2	15	0	15	10	89
Added Vol:	0	0	0	0	0	62	44	194	0	0	310	0
Committed P:	0	0	0	0	0	0	0	0	0	0	0	0
Initial Fut:	0	12	9	66	10	65	46	209	0	15	320	89
User Adj:	1.00	1.00	1.00	1.00	1.00	1.00	1.00	1.00	1.00	1.00	1.00	1.00
PHF Adj:	1.00	1.00	1.00	1.00	1.00	1.00	1.00	1.00	1.00	1.00	1.00	1.00
PHF Volume:	0	12	9	66	10	65	46	209	0	15	320	89
Reduct Vol:	0	0	0	0	0	0	0	0	0	0	0	0
Reduced Vol:	0	12	9	66	10	65	46	209	0	15	320	89
PCE Adj:	1.00	1.00	1.00	1.00	1.00	1.00	1.00	1.00	1.00	1.00	1.00	1.00
MLF Adj:	1.00	1.00	1.00	1.00	1.00	1.00	1.00	1.00	1.00	1.00	1.00	1.00
FinalVolume:	0	12	9	66	10	65	46	209	0	15	320	89
Saturation Flow Module:												
Adjustment:	1.00	1.00	1.00	1.00	1.00	1.00	1.00	1.00	1.00	1.00	1.00	1.00
Lanes:	0.00	0.58	0.42	0.47	0.07	0.46	0.18	0.82	0.00	0.04	0.75	0.21
Final Sat.:	0	337	245	295	43	289	130	590	0	28	589	164
Capacity Analysis Module:												
Vol/Sat:	xxxx	0.04	0.04	0.23	0.23	0.23	0.35	0.35	xxxx	0.54	0.54	0.54
Crit Moves:		****			****			****			****	
Delay/Veh:	0.0	8.5	8.5	9.6	9.6	9.6	10.3	10.3	0.0	12.5	12.5	12.5
Delay Adj:	1.00	1.00	1.00	1.00	1.00	1.00	1.00	1.00	1.00	1.00	1.00	1.00
AdjDel/Veh:	0.0	8.5	8.5	9.6	9.6	9.6	10.3	10.3	0.0	12.5	12.5	12.5
LOS by Move:	*	A	A	A	A	A	B	B	*	B	B	B
ApproachDel:		8.5			9.6			10.3			12.5	
Delay Adj:		1.00			1.00			1.00			1.00	
ApprAdjDel:		8.5			9.6			10.3			12.5	
LOS by Appr:		A			A			B			B	
AllWayAvgQ:	0.0	0.0	0.0	0.2	0.2	0.2	0.5	0.5	0.5	1.1	1.1	1.1

Newport Banning Ranch
Year 2016 with Project - TPO Analysis
PM Peak Hour

Note: Queue reported is the number of cars per lane.

Newport Banning Ranch
Year 2016 with Project - TPO Analysis
PM Peak Hour

Level Of Service Computation Report
2000 HCM 4-Way Stop Method (Future Volume Alternative)

Intersection #40 Monrovia Ave/17th St

Cycle (sec): 100 Critical Vol./Cap.(X): 0.660
Loss Time (sec): 0 (Y+R=4.0 sec) Average Delay (sec/veh): 16.0
Optimal Cycle: 0 Level Of Service: C

Street Name:	Monrovia Avenue						17th Street					
Approach:	North Bound			South Bound			East Bound			West Bound		
Movement:	L -	T -	R	L -	T -	R	L -	T -	R	L -	T -	R
Control:	Stop Sign			Stop Sign			Stop Sign			Stop Sign		
Rights:	Include			Include			Include			Include		
Min. Green:	0	0	0	0	0	0	0	0	0	0	0	0
Lanes:	0 0	1! 0	0	0 0	1! 0	0	0 0	1! 0	0	0 0	1! 0	0
Volume Module:												
Base Vol:	25	120	46	43	65	12	14	79	43	21	77	47
Growth Adj:	1.07	1.07	1.07	1.07	1.07	1.07	1.07	1.07	1.07	1.07	1.07	1.07
Initial Bse:	27	129	49	46	70	13	15	85	46	23	83	50
Added Vol:	0	24	0	-21	63	77	30	164	0	0	233	-8
Committed P:	0	0	0	0	0	0	0	0	0	0	0	0
Initial Fut:	27	153	49	25	133	90	45	249	46	23	316	42
User Adj:	1.00	1.00	1.00	1.00	1.00	1.00	1.00	1.00	1.00	1.00	1.00	1.00
PHF Adj:	1.00	1.00	1.00	1.00	1.00	1.00	1.00	1.00	1.00	1.00	1.00	1.00
PHF Volume:	27	153	49	25	133	90	45	249	46	23	316	42
Reduct Vol:	0	0	0	0	0	0	0	0	0	0	0	0
Reduced Vol:	27	153	49	25	133	90	45	249	46	23	316	42
PCE Adj:	1.00	1.00	1.00	1.00	1.00	1.00	1.00	1.00	1.00	1.00	1.00	1.00
MLF Adj:	1.00	1.00	1.00	1.00	1.00	1.00	1.00	1.00	1.00	1.00	1.00	1.00
FinalVolume:	27	153	49	25	133	90	45	249	46	23	316	42
Saturation Flow Module:												
Adjustment:	1.00	1.00	1.00	1.00	1.00	1.00	1.00	1.00	1.00	1.00	1.00	1.00
Lanes:	0.12	0.67	0.21	0.10	0.54	0.36	0.13	0.73	0.14	0.06	0.83	0.11
Final Sat.:	59	338	109	53	278	189	75	413	77	34	478	64
Capacity Analysis Module:												
Vol/Sat:	0.45	0.45	0.45	0.48	0.48	0.48	0.60	0.60	0.60	0.66	0.66	0.66
Crit Moves:	****			****				****		****		
Delay/Veh:	13.6	13.6	13.6	13.8	13.8	13.8	16.6	16.6	16.6	18.4	18.4	18.4
Delay Adj:	1.00	1.00	1.00	1.00	1.00	1.00	1.00	1.00	1.00	1.00	1.00	1.00
AdjDel/Veh:	13.6	13.6	13.6	13.8	13.8	13.8	16.6	16.6	16.6	18.4	18.4	18.4
LOS by Move:	B	B	B	B	B	B	C	C	C	C	C	C
ApproachDel:	13.6			13.8			16.6			18.4		
Delay Adj:	1.00			1.00			1.00			1.00		
ApprAdjDel:	13.6			13.8			16.6			18.4		
LOS by Appr:	B			B			C			C		
AllWayAvgQ:	0.6	0.6	0.6	0.7	0.7	0.7	1.2	1.2	1.2	1.5	1.5	1.5

Newport Banning Ranch
Year 2016 with Project - TPO Analysis
PM Peak Hour

Note: Queue reported is the number of cars per lane.

Newport Banning Ranch
Year 2016 with Project - TPO Analysis
PM Peak Hour

Level Of Service Computation Report
ICU 1(Loss as Cycle Length %) Method (Future Volume Alternative)

Intersection #41 Placentia Ave/17th St

Cycle (sec):	100	Critical Vol./Cap.(X):	0.689
Loss Time (sec):	0 (Y+R=4.0 sec)	Average Delay (sec/veh):	xxxxxx
Optimal Cycle:	46	Level Of Service:	B

Street Name:	Placentia Avenue						17th St					
Approach:	North Bound			South Bound			East Bound			West Bound		
Movement:	L - T - R			L - T - R			L - T - R			L - T - R		
Control:	Permitted			Permitted			Permitted			Permitted		
Rights:	Include			Include			Include			Include		
Min. Green:	0	0	0	0	0	0	0	0	0	0	0	0
Lanes:	1 0 1	1 0		1 0 1	1 0		1 0 0	1 0		1 0 0	1 0	
Volume Module:												
Base Vol:	49	668	69	113	387	26	52	151	34	37	108	187
Growth Adj:	1.07	1.07	1.07	1.07	1.07	1.07	1.07	1.07	1.07	1.07	1.07	1.07
Initial Bse:	53	716	74	121	415	28	56	162	36	40	116	200
Added Vol:	-8	-33	4	0	-101	37	23	141	-21	7	196	0
Committed P:	4	15	4	0	4	0	0	0	2	0	0	0
Initial Fut:	49	698	82	121	318	65	79	303	17	47	312	200
User Adj:	1.00	1.00	1.00	1.00	1.00	1.00	1.00	1.00	1.00	1.00	1.00	1.00
PHF Adj:	1.00	1.00	1.00	1.00	1.00	1.00	1.00	1.00	1.00	1.00	1.00	1.00
PHF Volume:	49	698	82	121	318	65	79	303	17	47	312	200
Reduct Vol:	0	0	0	0	0	0	0	0	0	0	0	0
Reduced Vol:	49	698	82	121	318	65	79	303	17	47	312	200
PCE Adj:	1.00	1.00	1.00	1.00	1.00	1.00	1.00	1.00	1.00	1.00	1.00	1.00
MLF Adj:	1.00	1.00	1.00	1.00	1.00	1.00	1.00	1.00	1.00	1.00	1.00	1.00
FinalVolume:	49	698	82	121	318	65	79	303	17	47	312	200
Saturation Flow Module:												
Sat/Lane:	1600	1600	1600	1600	1600	1600	1600	1600	1600	1600	1600	1600
Adjustment:	1.00	1.00	1.00	1.00	1.00	1.00	1.00	1.00	1.00	1.00	1.00	1.00
Lanes:	1.00	1.79	0.21	1.00	1.66	0.34	1.00	0.95	0.05	1.00	0.61	0.39
Final Sat.:	1600	2864	336	1600	2658	542	1600	1513	87	1600	974	626
Capacity Analysis Module:												
Vol/Sat:	0.03	0.24	0.24	0.08	0.12	0.12	0.05	0.20	0.20	0.03	0.32	0.32
Crit Moves:		****		****			****				****	

Newport Banning Ranch
Year 2016 with Project - TPO Analysis
PM Peak Hour

Level Of Service Computation Report
2000 HCM 4-Way Stop Method (Future Volume Alternative)

Intersection #42 Pomona Ave/17th St

Cycle (sec): 100 Critical Vol./Cap.(X): 1.016
Loss Time (sec): 0 (Y+R=4.0 sec) Average Delay (sec/veh): 46.3
Optimal Cycle: 0 Level Of Service: E

Street Name:	Pomona Avenue						17th Street					
Approach:	North Bound			South Bound			East Bound			West Bound		
Movement:	L -	T -	R	L -	T -	R	L -	T -	R	L -	T -	R
Control:	Stop Sign			Stop Sign			Stop Sign			Stop Sign		
Rights:	Include			Include			Include			Include		
Min. Green:	0	0	0	0	0	0	0	0	0	0	0	0
Lanes:	0 0	1! 0	0	0 0	1! 0	0	1 0	0 1	0	1 0	1 0	1
Volume Module:												
Base Vol:	20	130	53	65	86	32	52	308	16	43	297	102
Growth Adj:	1.07	1.07	1.07	1.07	1.07	1.07	1.07	1.07	1.07	1.07	1.07	1.07
Initial Bse:	21	139	57	70	92	34	56	330	17	46	318	109
Added Vol:	0	2	0	0	4	0	0	141	0	0	196	0
Committed P:	0	0	0	0	0	0	0	0	0	0	0	0
Initial Fut:	21	141	57	70	96	34	56	471	17	46	514	109
User Adj:	1.00	1.00	1.00	1.00	1.00	1.00	1.00	1.00	1.00	1.00	1.00	1.00
PHF Adj:	1.00	1.00	1.00	1.00	1.00	1.00	1.00	1.00	1.00	1.00	1.00	1.00
PHF Volume:	21	141	57	70	96	34	56	471	17	46	514	109
Reduct Vol:	0	0	0	0	0	0	0	0	0	0	0	0
Reduced Vol:	21	141	57	70	96	34	56	471	17	46	514	109
PCE Adj:	1.00	1.00	1.00	1.00	1.00	1.00	1.00	1.00	1.00	1.00	1.00	1.00
MLF Adj:	1.00	1.00	1.00	1.00	1.00	1.00	1.00	1.00	1.00	1.00	1.00	1.00
FinalVolume:	21	141	57	70	96	34	56	471	17	46	514	109
Saturation Flow Module:												
Adjustment:	1.00	1.00	1.00	1.00	1.00	1.00	1.00	1.00	1.00	1.00	1.00	1.00
Lanes:	0.10	0.64	0.26	0.35	0.48	0.17	1.00	0.96	0.04	1.00	1.00	1.00
Final Sat.:	45	295	118	156	215	77	466	482	18	470	506	558
Capacity Analysis Module:												
Vol/Sat:	0.48	0.48	0.48	0.45	0.45	0.45	0.12	0.98	0.98	0.10	1.02	0.20
Crit Moves:			****	****				****			****	
Delay/Veh:	17.2	17.2	17.2	16.8	16.8	16.8	11.5	60.9	60.9	11.1	70.7	10.7
Delay Adj:	1.00	1.00	1.00	1.00	1.00	1.00	1.00	1.00	1.00	1.00	1.00	1.00
AdjDel/Veh:	17.2	17.2	17.2	16.8	16.8	16.8	11.5	60.9	60.9	11.1	70.7	10.7
LOS by Move:	C	C	C	C	C	C	B	F	F	B	F	B
ApproachDel:	17.2			16.8			55.8			56.8		
Delay Adj:	1.00			1.00			1.00			1.00		
ApprAdjDel:	17.2			16.8			55.8			56.8		
LOS by Appr:	C			C			F			F		
AllWayAvgQ:	0.8	0.8	0.8	0.7	0.7	0.7	0.1	7.1	7.1	0.1	8.6	0.2

Newport Banning Ranch
Year 2016 with Project - TPO Analysis
PM Peak Hour

Note: Queue reported is the number of cars per lane.

Newport Banning Ranch
Year 2016 with Project - TPO Analysis
PM Peak Hour

Level Of Service Computation Report
ICU 1(Loss as Cycle Length %) Method (Future Volume Alternative)

Intersection #43 Superior Ave/17th St

Cycle (sec):	100	Critical Vol./Cap.(X):	0.977
Loss Time (sec):	0 (Y+R=4.0 sec)	Average Delay (sec/veh):	xxxxxx
Optimal Cycle:	180	Level Of Service:	E

Street Name:	Superior Avenue						17th Street					
Approach:	North Bound			South Bound			East Bound			West Bound		
Movement:	L - T - R			L - T - R			L - T - R			L - T - R		
Control:	Prot+Permit			Prot+Permit			Prot+Permit			Prot+Permit		
Rights:	Include			Include			Include			Include		
Min. Green:	0	0	0	0	0	0	0	0	0	0	0	0
Lanes:	1 0 0 1 1			1 0 1 1 0			1 0 1 1 0			1 0 1 1 0		
Volume Module:												
Base Vol:	100	184	620	89	287	84	25	497	65	423	436	81
Growth Adj:	1.07	1.07	1.07	1.07	1.07	1.07	1.07	1.07	1.07	1.07	1.07	1.07
Initial Bse:	107	197	665	95	308	90	27	533	70	453	467	87
Added Vol:	0	0	98	0	0	0	0	141	0	145	196	0
Committed P:	3	25	0	0	101	0	0	0	11	0	0	0
Initial Fut:	110	222	763	95	409	90	27	674	81	598	663	87
User Adj:	1.00	1.00	1.00	1.00	1.00	1.00	1.00	1.00	1.00	1.00	1.00	1.00
PHF Adj:	1.00	1.00	1.00	1.00	1.00	1.00	1.00	1.00	1.00	1.00	1.00	1.00
PHF Volume:	110	222	763	95	409	90	27	674	81	598	663	87
Reduct Vol:	0	0	0	0	0	0	0	0	0	0	0	0
Reduced Vol:	110	222	763	95	409	90	27	674	81	598	663	87
PCE Adj:	1.00	1.00	1.00	1.00	1.00	1.00	1.00	1.00	1.00	1.00	1.00	1.00
MLF Adj:	1.00	1.00	1.00	1.00	1.00	1.00	1.00	1.00	1.00	1.00	1.00	1.00
FinalVolume:	110	222	763	95	409	90	27	674	81	598	663	87
Saturation Flow Module:												
Sat/Lane:	1600	1600	1600	1600	1600	1600	1600	1600	1600	1600	1600	1600
Adjustment:	1.00	1.00	1.00	1.00	1.00	1.00	1.00	1.00	1.00	1.00	1.00	1.00
Lanes:	1.00	0.45	1.55	1.00	1.64	0.36	1.00	1.79	0.21	1.00	1.77	0.23
Final Sat.:	1600	722	2478	1600	2622	578	1600	2858	342	1600	2830	370
Capacity Analysis Module:												
Vol/Sat:	0.07	0.31	0.31	0.06	0.16	0.16	0.02	0.24	0.24	0.37	0.23	0.23
Crit Moves:		****		****				****		****		

Newport Banning Ranch
Year 2016 with Project - TPO Analysis
PM Peak Hour

Level Of Service Computation Report
ICU 1(Loss as Cycle Length %) Method (Future Volume Alternative)

Intersection #44 Newport Blvd/17th St

Cycle (sec):	120	Critical Vol./Cap.(X):	0.911
Loss Time (sec):	0 (Y+R=4.0 sec)	Average Delay (sec/veh):	xxxxxx
Optimal Cycle:	180	Level Of Service:	E

Street Name:	Newport Boulevard									17th Street								
Approach:	North Bound			South Bound			East Bound			West Bound		
Movement:	L	- T	- R	L	- T	- R	L	- T	- R	L	- T	- R
Control:	Protected			Protected			Protected			Protected		
Rights:	Include			Include			Include			Include		
Min. Green:	0	0	0	0	0	0	0	0	0	0	0	0
Lanes:	1 0	3 1	0	2 0	3 0	1	3 0	1 1	0	2 0	3 0	1
Volume Module:												
Base Vol:	63	1820	169	714	2315	347	707	393	22	276	485	201
Growth Adj:	1.07	1.07	1.07	1.07	1.07	1.07	1.07	1.07	1.07	1.07	1.07	1.07
Initial Bse:	68	1951	181	765	2482	372	758	421	24	296	520	215
Added Vol:	0	33	13	0	59	258	182	57	0	23	83	0
Committed P:	0	67	0	0	51	0	0	0	0	0	0	0
Initial Fut:	68	2051	194	765	2592	630	940	478	24	319	603	215
User Adj:	1.00	1.00	1.00	1.00	1.00	1.00	1.00	1.00	1.00	1.00	1.00	1.00
PHF Adj:	1.00	1.00	1.00	1.00	1.00	1.00	1.00	1.00	1.00	1.00	1.00	1.00
PHF Volume:	68	2051	194	765	2592	630	940	478	24	319	603	215
Reduct Vol:	0	0	0	0	0	0	0	0	0	0	0	0
Reduced Vol:	68	2051	194	765	2592	630	940	478	24	319	603	215
PCE Adj:	1.00	1.00	1.00	1.00	1.00	1.00	1.00	1.00	1.00	1.00	1.00	1.00
MLF Adj:	1.00	1.00	1.00	1.00	1.00	1.00	1.00	1.00	1.00	1.00	1.00	1.00
FinalVolume:	68	2051	194	765	2592	630	940	478	24	319	603	215
Saturation Flow Module:												
Sat/Lane:	1600	1600	1600	1600	1600	1600	1600	1600	1600	1600	1600	1600
Adjustment:	1.00	1.00	1.00	1.00	1.00	1.00	1.00	1.00	1.00	1.00	1.00	1.00
Lanes:	1.00	3.65	0.35	2.00	3.00	1.00	3.00	1.91	0.09	2.00	3.00	1.00
Final Sat.:	1600	5847	553	3200	4800	1600	4800	3050	150	3200	4800	1600
Capacity Analysis Module:												
Vol/Sat:	0.04	0.35	0.35	0.24	0.54	0.39	0.20	0.16	0.16	0.10	0.13	0.13
Crit Moves:		****		****			****				****	

Newport Banning Ranch
Year 2016 with Project - TPO Analysis
PM Peak Hour

Level Of Service Computation Report
ICU 1(Loss as Cycle Length %) Method (Future Volume Alternative)

Intersection #45 Orange Ave/17th St

Cycle (sec):	100	Critical Vol./Cap.(X):	0.688
Loss Time (sec):	0 (Y+R=4.0 sec)	Average Delay (sec/veh):	xxxxxx
Optimal Cycle:	73	Level Of Service:	B

Street Name:	Orange Avenue						17th Street					
Approach:	North Bound			South Bound			East Bound			West Bound		
Movement:	L - T - R			L - T - R			L - T - R			L - T - R		
Control:	Prot+Permit			Prot+Permit			Prot+Permit			Prot+Permit		
Rights:	Include			Include			Include			Include		
Min. Green:	0	0	0	0	0	0	0	0	0	0	0	0
Lanes:	1 0 1	1 0		1 0 1	0 1		1 0 2	0 1		1 0 2	0 1	
Volume Module:												
Base Vol:	168	276	68	214	204	121	140	910	157	83	895	198
Growth Adj:	1.07	1.07	1.07	1.07	1.07	1.07	1.07	1.07	1.07	1.07	1.07	1.07
Initial Bse:	180	296	73	229	219	130	150	976	168	89	959	212
Added Vol:	0	0	0	0	0	0	0	70	0	0	106	0
Committed P:	0	0	2	2	0	0	0	5	0	1	4	1
Initial Fut:	180	296	75	231	219	130	150	1051	168	90	1069	213
User Adj:	1.00	1.00	1.00	1.00	1.00	1.00	1.00	1.00	1.00	1.00	1.00	1.00
PHF Adj:	1.00	1.00	1.00	1.00	1.00	1.00	1.00	1.00	1.00	1.00	1.00	1.00
PHF Volume:	180	296	75	231	219	130	150	1051	168	90	1069	213
Reduct Vol:	0	0	0	0	0	0	0	0	0	0	0	0
Reduced Vol:	180	296	75	231	219	130	150	1051	168	90	1069	213
PCE Adj:	1.00	1.00	1.00	1.00	1.00	1.00	1.00	1.00	1.00	1.00	1.00	1.00
MLF Adj:	1.00	1.00	1.00	1.00	1.00	1.00	1.00	1.00	1.00	1.00	1.00	1.00
FinalVolume:	180	296	75	231	219	130	150	1051	168	90	1069	213
Saturation Flow Module:												
Sat/Lane:	1600	1600	1600	1600	1600	1600	1600	1600	1600	1600	1600	1600
Adjustment:	1.00	1.00	1.00	1.00	1.00	1.00	1.00	1.00	1.00	1.00	1.00	1.00
Lanes:	1.00	1.60	0.40	1.00	1.00	1.00	1.00	2.00	1.00	1.00	2.00	1.00
Final Sat.:	1600	2554	646	1600	1600	1600	1600	3200	1600	1600	3200	1600
Capacity Analysis Module:												
Vol/Sat:	0.11	0.12	0.12	0.14	0.14	0.08	0.09	0.33	0.11	0.06	0.33	0.13
Crit Moves:		****		****			****				****	

Newport Banning Ranch
Year 2016 with Project - TPO Analysis
PM Peak Hour

Level Of Service Computation Report
ICU 1(Loss as Cycle Length %) Method (Future Volume Alternative)

Intersection #46 Santa Ana Ave/17th St

Cycle (sec):	100	Critical Vol./Cap.(X):	0.677
Loss Time (sec):	0 (Y+R=4.0 sec)	Average Delay (sec/veh):	xxxxxx
Optimal Cycle:	58	Level Of Service:	B

Street Name:	Santa Ana Avenue						17th Street					
Approach:	North Bound			South Bound			East Bound			West Bound		
Movement:	L - T - R			L - T - R			L - T - R			L - T - R		
Control:	Permitted			Permitted			Prot+Permit			Prot+Permit		
Rights:	Include			Include			Include			Include		
Min. Green:	0	0	0	0	0	0	0	0	0	0	0	0
Lanes:	1 0 1	0 1		1 0 1	0 1		1 0 2	0 1		1 0 2	0 1	
Volume Module:												
Base Vol:	126	173	94	115	170	88	96	937	69	147	1137	130
Growth Adj:	1.07	1.07	1.07	1.07	1.07	1.07	1.07	1.07	1.07	1.07	1.07	1.07
Initial Bse:	135	185	101	123	182	94	103	1004	74	158	1219	139
Added Vol:	0	0	0	0	0	0	0	70	0	0	106	0
Committed P:	0	0	5	5	0	0	0	12	0	3	9	3
Initial Fut:	135	185	106	128	182	94	103	1086	74	161	1334	142
User Adj:	1.00	1.00	1.00	1.00	1.00	1.00	1.00	1.00	1.00	1.00	1.00	1.00
PHF Adj:	1.00	1.00	1.00	1.00	1.00	1.00	1.00	1.00	1.00	1.00	1.00	1.00
PHF Volume:	135	185	106	128	182	94	103	1086	74	161	1334	142
Reduct Vol:	0	0	0	0	0	0	0	0	0	0	0	0
Reduced Vol:	135	185	106	128	182	94	103	1086	74	161	1334	142
PCE Adj:	1.00	1.00	1.00	1.00	1.00	1.00	1.00	1.00	1.00	1.00	1.00	1.00
MLF Adj:	1.00	1.00	1.00	1.00	1.00	1.00	1.00	1.00	1.00	1.00	1.00	1.00
FinalVolume:	135	185	106	128	182	94	103	1086	74	161	1334	142
Saturation Flow Module:												
Sat/Lane:	1600	1600	1600	1600	1600	1600	1600	1600	1600	1600	1600	1600
Adjustment:	1.00	1.00	1.00	1.00	1.00	1.00	1.00	1.00	1.00	1.00	1.00	1.00
Lanes:	1.00	1.00	1.00	1.00	1.00	1.00	1.00	2.00	1.00	1.00	2.00	1.00
Final Sat.:	1600	1600	1600	1600	1600	1600	1600	3200	1600	1600	3200	1600
Capacity Analysis Module:												
Vol/Sat:	0.08	0.12	0.07	0.08	0.11	0.06	0.06	0.34	0.05	0.10	0.42	0.09
Crit Moves:		****		****			****				****	

Newport Banning Ranch
Year 2016 with Project - TPO Analysis
PM Peak Hour

Level Of Service Computation Report
ICU 1(Loss as Cycle Length %) Method (Future Volume Alternative)

Intersection #47 Tustin Ave/17th St

Cycle (sec):	100	Critical Vol./Cap.(X):	0.733
Loss Time (sec):	0 (Y+R=4.0 sec)	Average Delay (sec/veh):	xxxxxx
Optimal Cycle:	70	Level Of Service:	C

Street Name:	Tustin Avenue						17th Street					
Approach:	North Bound			South Bound			East Bound			West Bound		
Movement:	L - T - R			L - T - R			L - T - R			L - T - R		
Control:	Permitted			Permitted			Prot+Permit			Prot+Permit		
Rights:	Include			Include			Include			Include		
Min. Green:	0	0	0	0	0	0	0	0	0	0	0	0
Lanes:	1 0 0 1 0			1 0 1 0 1			1 0 1 1 0			1 0 1 1 0		
Volume Module:												
Base Vol:	124	157	83	77	111	56	46	996	62	76	1243	82
Growth Adj:	1.07	1.07	1.07	1.07	1.07	1.07	1.07	1.07	1.07	1.07	1.07	1.07
Initial Bse:	133	168	89	83	119	60	49	1068	66	81	1332	88
Added Vol:	0	0	0	0	0	0	0	70	0	0	106	0
Committed P:	0	0	5	5	0	0	0	30	0	3	17	3
Initial Fut:	133	168	94	88	119	60	49	1168	66	84	1455	91
User Adj:	1.00	1.00	1.00	1.00	1.00	1.00	1.00	1.00	1.00	1.00	1.00	1.00
PHF Adj:	1.00	1.00	1.00	1.00	1.00	1.00	1.00	1.00	1.00	1.00	1.00	1.00
PHF Volume:	133	168	94	88	119	60	49	1168	66	84	1455	91
Reduct Vol:	0	0	0	0	0	0	0	0	0	0	0	0
Reduced Vol:	133	168	94	88	119	60	49	1168	66	84	1455	91
PCE Adj:	1.00	1.00	1.00	1.00	1.00	1.00	1.00	1.00	1.00	1.00	1.00	1.00
MLF Adj:	1.00	1.00	1.00	1.00	1.00	1.00	1.00	1.00	1.00	1.00	1.00	1.00
FinalVolume:	133	168	94	88	119	60	49	1168	66	84	1455	91
Saturation Flow Module:												
Sat/Lane:	1600	1600	1600	1600	1600	1600	1600	1600	1600	1600	1600	1600
Adjustment:	1.00	1.00	1.00	1.00	1.00	1.00	1.00	1.00	1.00	1.00	1.00	1.00
Lanes:	1.00	0.64	0.36	1.00	1.00	1.00	1.00	1.89	0.11	1.00	1.88	0.12
Final Sat.:	1600	1027	573	1600	1600	1600	1600	3028	172	1600	3012	188
Capacity Analysis Module:												
Vol/Sat:	0.08	0.16	0.16	0.05	0.07	0.04	0.03	0.39	0.39	0.05	0.48	0.48
Crit Moves:		****		****			****				****	

Newport Banning Ranch
Year 2016 with Project - TPO Analysis
PM Peak Hour

Level Of Service Computation Report
ICU 1(Loss as Cycle Length %) Method (Future Volume Alternative)

Intersection #48 Irvine Ave/17th St

Cycle (sec):	100	Critical Vol./Cap.(X):	0.708
Loss Time (sec):	0 (Y+R=4.0 sec)	Average Delay (sec/veh):	xxxxxx
Optimal Cycle:	78	Level Of Service:	C

Street Name:	Irvine Avenue						17th Street					
Approach:	North Bound			South Bound			East Bound			West Bound		
Movement:	L - T - R			L - T - R			L - T - R			L - T - R		
Control:	Protected			Protected			Protected			Protected		
Rights:	Include			Include			Include			Include		
Min. Green:	0	0	0	0	0	0	0	0	0	0	0	0
Lanes:	2 0 2	0 1		2 0 2	0 1		2 0 1	1 0		1 0 1	1 0	
Volume Module:												
Base Vol:	373	623	49	168	528	334	233	570	200	101	646	61
Growth Adj:	1.07	1.07	1.07	1.07	1.07	1.07	1.07	1.07	1.07	1.07	1.07	1.07
Initial Bse:	400	668	53	180	566	358	250	611	214	108	693	65
Added Vol:	1	0	0	0	0	0	0	69	1	0	104	0
Committed P:	0	0	0	8	0	0	14	35	0	0	23	0
Initial Fut:	401	668	53	188	566	358	264	715	215	108	820	65
User Adj:	1.00	1.00	1.00	1.00	1.00	1.00	1.00	1.00	1.00	1.00	1.00	1.00
PHF Adj:	1.00	1.00	1.00	1.00	1.00	1.00	1.00	1.00	1.00	1.00	1.00	1.00
PHF Volume:	401	668	53	188	566	358	264	715	215	108	820	65
Reduct Vol:	0	0	0	0	0	0	0	0	0	0	0	0
Reduced Vol:	401	668	53	188	566	358	264	715	215	108	820	65
PCE Adj:	1.00	1.00	1.00	1.00	1.00	1.00	1.00	1.00	1.00	1.00	1.00	1.00
MLF Adj:	1.00	1.00	1.00	1.00	1.00	1.00	1.00	1.00	1.00	1.00	1.00	1.00
FinalVolume:	401	668	53	188	566	358	264	715	215	108	820	65
Saturation Flow Module:												
Sat/Lane:	1600	1600	1600	1600	1600	1600	1600	1600	1600	1600	1600	1600
Adjustment:	1.00	1.00	1.00	1.00	1.00	1.00	1.00	1.00	1.00	1.00	1.00	1.00
Lanes:	2.00	2.00	1.00	2.00	2.00	1.00	2.00	1.54	0.46	1.00	1.85	0.15
Final Sat.:	3200	3200	1600	3200	3200	1600	3200	2459	741	1600	2964	236
Capacity Analysis Module:												
Vol/Sat:	0.13	0.21	0.03	0.06	0.18	0.22	0.08	0.29	0.29	0.07	0.28	0.28
Crit Moves:	****					****	****				****	

Newport Banning Ranch
Year 2016 with Project - TPO Analysis
PM Peak Hour

Level Of Service Computation Report
ICU 1(Loss as Cycle Length %) Method (Future Volume Alternative)

Intersection #49 Placentia Ave/16th St

Cycle (sec):	100	Critical Vol./Cap.(X):	0.409
Loss Time (sec):	0 (Y+R=4.0 sec)	Average Delay (sec/veh):	xxxxxx
Optimal Cycle:	24	Level Of Service:	A

Street Name:	Placentia Avenue						16th Street					
Approach:	North Bound			South Bound			East Bound			West Bound		
Movement:	L - T - R			L - T - R			L - T - R			L - T - R		
Control:	Permitted			Permitted			Permitted			Permitted		
Rights:	Include			Include			Include			Include		
Min. Green:	0	0	0	0	0	0	0	0	0	0	0	0
Lanes:	1 0 1	1 0		1 0 1	1 0		1 0 0	1 0		1 0 0	1 0	
Volume Module:												
Base Vol:	34	530	22	21	381	20	64	42	59	21	28	82
Growth Adj:	1.07	1.07	1.07	1.07	1.07	1.07	1.07	1.07	1.07	1.07	1.07	1.07
Initial Bse:	36	568	24	23	408	21	69	45	63	23	30	88
Added Vol:	-8	-52	0	0	-144	29	14	80	-21	0	148	0
Committed P:	0	28	0	0	9	0	0	0	0	0	0	0
Initial Fut:	28	544	24	23	273	50	83	125	42	23	178	88
User Adj:	1.00	1.00	1.00	1.00	1.00	1.00	1.00	1.00	1.00	1.00	1.00	1.00
PHF Adj:	1.00	1.00	1.00	1.00	1.00	1.00	1.00	1.00	1.00	1.00	1.00	1.00
PHF Volume:	28	544	24	23	273	50	83	125	42	23	178	88
Reduct Vol:	0	0	0	0	0	0	0	0	0	0	0	0
Reduced Vol:	28	544	24	23	273	50	83	125	42	23	178	88
PCE Adj:	1.00	1.00	1.00	1.00	1.00	1.00	1.00	1.00	1.00	1.00	1.00	1.00
MLF Adj:	1.00	1.00	1.00	1.00	1.00	1.00	1.00	1.00	1.00	1.00	1.00	1.00
FinalVolume:	28	544	24	23	273	50	83	125	42	23	178	88
Saturation Flow Module:												
Sat/Lane:	1600	1600	1600	1600	1600	1600	1600	1600	1600	1600	1600	1600
Adjustment:	1.00	1.00	1.00	1.00	1.00	1.00	1.00	1.00	1.00	1.00	1.00	1.00
Lanes:	1.00	1.92	0.08	1.00	1.69	0.31	1.00	0.75	0.25	1.00	0.67	0.33
Final Sat.:	1600	3067	133	1600	2702	498	1600	1196	404	1600	1071	529
Capacity Analysis Module:												
Vol/Sat:	0.02	0.18	0.18	0.01	0.10	0.10	0.05	0.10	0.10	0.01	0.17	0.17
Crit Moves:		****		****			****				****	

Newport Banning Ranch
Year 2016 with Project - TPO Analysis
PM Peak Hour

Level Of Service Computation Report
ICU 1(Loss as Cycle Length %) Method (Future Volume Alternative)

Intersection #50 Superior Ave/16th St

Cycle (sec):	100	Critical Vol./Cap.(X):	0.564
Loss Time (sec):	0 (Y+R=4.0 sec)	Average Delay (sec/veh):	xxxxxx
Optimal Cycle:	33	Level Of Service:	A

Street Name:	Superior Avenue						16th Street					
Approach:	North Bound			South Bound			East Bound			West Bound		
Movement:	L - T - R			L - T - R			L - T - R			L - T - R		
Control:	Permitted			Permitted			Permitted			Permitted		
Rights:	Include			Include			Include			Include		
Min. Green:	0	0	0	0	0	0	0	0	0	0	0	0
Lanes:	1 0 2	0	1	1 0 1	1	0	1 0 0	1	0	0 1 0	0	1
Volume Module:												
Base Vol:	23	699	23	25	864	43	30	94	0	16	87	14
Growth Adj:	1.07	1.07	1.07	1.07	1.07	1.07	1.07	1.07	1.07	1.07	1.07	1.07
Initial Bse:	25	749	25	27	926	46	32	101	0	17	93	15
Added Vol:	0	68	0	0	85	60	30	47	0	0	85	0
Committed P:	2	34	0	0	118	0	0	0	3	0	0	0
Initial Fut:	27	851	25	27	1129	106	62	148	3	17	178	15
User Adj:	1.00	1.00	1.00	1.00	1.00	1.00	1.00	1.00	1.00	1.00	1.00	1.00
PHF Adj:	1.00	1.00	1.00	1.00	1.00	1.00	1.00	1.00	1.00	1.00	1.00	1.00
PHF Volume:	27	851	25	27	1129	106	62	148	3	17	178	15
Reduct Vol:	0	0	0	0	0	0	0	0	0	0	0	0
Reduced Vol:	27	851	25	27	1129	106	62	148	3	17	178	15
PCE Adj:	1.00	1.00	1.00	1.00	1.00	1.00	1.00	1.00	1.00	1.00	1.00	1.00
MLF Adj:	1.00	1.00	1.00	1.00	1.00	1.00	1.00	1.00	1.00	1.00	1.00	1.00
FinalVolume:	27	851	25	27	1129	106	62	148	3	17	178	15
Saturation Flow Module:												
Sat/Lane:	1600	1600	1600	1600	1600	1600	1600	1600	1600	1600	1600	1600
Adjustment:	1.00	1.00	1.00	1.00	1.00	1.00	1.00	1.00	1.00	1.00	1.00	1.00
Lanes:	1.00	2.00	1.00	1.00	1.83	0.17	1.00	0.98	0.02	0.09	0.91	1.00
Final Sat.:	1600	3200	1600	1600	2925	275	1600	1568	32	140	1460	1600
Capacity Analysis Module:												
Vol/Sat:	0.02	0.27	0.02	0.02	0.39	0.39	0.04	0.09	0.09	0.01	0.12	0.01
Crit Moves:	****				****		****				****	

Newport Banning Ranch
Year 2016 with Project - TPO Analysis
PM Peak Hour

Level Of Service Computation Report
ICU 1(Loss as Cycle Length %) Method (Future Volume Alternative)

Intersection #51 Newport Blvd/16th St

Cycle (sec):	120	Critical Vol./Cap.(X):	0.616
Loss Time (sec):	0 (Y+R=4.0 sec)	Average Delay (sec/veh):	xxxxxx
Optimal Cycle:	48	Level Of Service:	B

Street Name:	Newport Boulevard									16th Street								
Approach:	North Bound						South Bound						East Bound						West Bound					
Movement:	L	-	T	-	R		L	-	T	-	R		L	-	T	-	R		L	-	T	-	R	
Control:	Protected						Protected						Permitted						Permitted					
Rights:		Include						Include						Include						Include				
Min. Green:	0	0		0			0	0		0			0	0		0			0	0		0		
Lanes:	1	0	2	1	0		1	0	3	0	1		0	0	1!	0	0		0	0	1!	0	0	
Volume Module:																								
Base Vol:	20	1402		50			85	2084		29			36	48		21			20	37		59		
Growth Adj:	1.07	1.07		1.07			1.07	1.07		1.07			1.07	1.07		1.07			1.07	1.07		1.07		
Initial Bse:	21	1503		54			91	2234		31			39	51		23			21	40		63		
Added Vol:	0	46		0			0	82		0			0	0		0			0	0		0		
Committed P:	3	67		12			0	51		0			0	0		5			9	0		0		
Initial Fut:	24	1616		66			91	2367		31			39	51		28			30	40		63		
User Adj:	1.00	1.00		1.00			1.00	1.00		1.00			1.00	1.00		1.00			1.00	1.00		1.00		
PHF Adj:	1.00	1.00		1.00			1.00	1.00		1.00			1.00	1.00		1.00			1.00	1.00		1.00		
PHF Volume:	24	1616		66			91	2367		31			39	51		28			30	40		63		
Reduct Vol:	0	0		0			0	0		0			0	0		0			0	0		0		
Reduced Vol:	24	1616		66			91	2367		31			39	51		28			30	40		63		
PCE Adj:	1.00	1.00		1.00			1.00	1.00		1.00			1.00	1.00		1.00			1.00	1.00		1.00		
MLF Adj:	1.00	1.00		1.00			1.00	1.00		1.00			1.00	1.00		1.00			1.00	1.00		1.00		
FinalVolume:	24	1616		66			91	2367		31			39	51		28			30	40		63		
Saturation Flow Module:																								
Sat/Lane:	1600	1600		1600			1600	1600		1600			1600	1600		1600			1600	1600		1600		
Adjustment:	1.00	1.00		1.00			1.00	1.00		1.00			1.00	1.00		1.00			1.00	1.00		1.00		
Lanes:	1.00	2.88		0.12			1.00	3.00		1.00			0.33	0.44		0.23			0.23	0.30		0.47		
Final Sat.:	1600	4613		187			1600	4800		1600			525	700		374			365	476		759		
Capacity Analysis Module:																								
Vol/Sat:	0.02	0.35		0.35			0.06	0.49		0.02			0.02	0.07		0.07			0.02	0.08		0.08		
Crit Moves:	****							****					****							****				

Newport Banning Ranch
Year 2016 with Project - TPO Analysis
PM Peak Hour

Level Of Service Computation Report
ICU 1(Loss as Cycle Length %) Method (Future Volume Alternative)

Intersection #52 Bluff Rd/Victoria St

Cycle (sec):	100	Critical Vol./Cap.(X):	0.573
Loss Time (sec):	0 (Y+R=4.0 sec)	Average Delay (sec/veh):	xxxxxx
Optimal Cycle:	53	Level Of Service:	A

Street Name:	Bluff Road						Victoria St					
Approach:	North Bound			South Bound			East Bound			West Bound		
Movement:	L - T - R			L - T - R			L - T - R			L - T - R		
Control:	Protected			Protected			Protected			Protected		
Rights:	Include			Include			Include			Include		
Min. Green:	0	0	0	0	0	0	0	0	0	0	0	0
Lanes:	0 0 0 0 0			0 0 0 0 0			0 0 2 0 0			0 0 2 0 0		
Volume Module:												
Base Vol:	0	0	0	0	0	0	0	942	0	0	1709	0
Growth Adj:	1.00	1.00	1.00	1.00	1.00	1.00	1.00	1.07	1.00	1.00	1.07	1.00
Initial Bse:	0	0	0	0	0	0	0	1010	0	0	1832	0
Added Vol:	0	0	0	0	0	0	0	0	0	0	0	0
PasserByVol:	0	0	0	0	0	0	0	0	0	0	0	0
Initial Fut:	0	0	0	0	0	0	0	1010	0	0	1832	0
User Adj:	1.00	1.00	1.00	1.00	1.00	1.00	1.00	1.00	1.00	1.00	1.00	1.00
PHF Adj:	1.00	1.00	1.00	1.00	1.00	1.00	1.00	1.00	1.00	1.00	1.00	1.00
PHF Volume:	0	0	0	0	0	0	0	1010	0	0	1832	0
Reduct Vol:	0	0	0	0	0	0	0	0	0	0	0	0
Reduced Vol:	0	0	0	0	0	0	0	1010	0	0	1832	0
PCE Adj:	1.00	1.00	1.00	1.00	1.00	1.00	1.00	1.00	1.00	1.00	1.00	1.00
MLF Adj:	1.00	1.00	1.00	1.00	1.00	1.00	1.00	1.00	1.00	1.00	1.00	1.00
FinalVolume:	0	0	0	0	0	0	0	1010	0	0	1832	0
Saturation Flow Module:												
Sat/Lane:	1600	1600	1600	1600	1600	1600	1600	1600	1600	1600	1600	1600
Adjustment:	1.00	1.00	1.00	1.00	1.00	1.00	1.00	1.00	1.00	1.00	1.00	1.00
Lanes:	0.00	0.00	0.00	0.00	0.00	0.00	0.00	2.00	0.00	0.00	2.00	0.00
Final Sat.:	0	0	0	0	0	0	0	3200	0	0	3200	0
Capacity Analysis Module:												
Vol/Sat:	0.00	0.00	0.00	0.00	0.00	0.00	0.00	0.32	0.00	0.00	0.57	0.00
Crit Moves:							****				****	

Newport Banning Ranch
Year 2016 with Project - TPO Analysis
PM Peak Hour

Level Of Service Computation Report
ICU 1(Loss as Cycle Length %) Method (Future Volume Alternative)

Intersection #53 Bluff Rd/19th St

Cycle (sec):	100	Critical Vol./Cap.(X):	0.114
Loss Time (sec):	0 (Y+R=4.0 sec)	Average Delay (sec/veh):	xxxxxx
Optimal Cycle:	16	Level Of Service:	A

Street Name:	Bluff Rd						19th Street					
Approach:	North Bound			South Bound			East Bound			West Bound		
Movement:	L - T - R			L - T - R			L - T - R			L - T - R		
Control:	Permitted			Permitted			Permitted			Permitted		
Rights:	Include			Include			Include			Include		
Min. Green:	0	0	0	0	0	0	0	0	0	0	0	0
Lanes:	0 0 1	0	1	0 1	0	0	0 0 0	0	0	1 0	0	0
Volume Module:												
Base Vol:	0	0	0	0	0	0	0	0	0	0	0	0
Growth Adj:	1.00	1.00	1.00	1.00	1.00	1.00	1.00	1.00	1.00	1.00	1.00	1.00
Initial Bse:	0	0	0	0	0	0	0	0	0	0	0	0
Added Vol:	0	0	69	0	0	0	0	0	0	114	0	0
PasserByVol:	0	0	0	0	0	0	0	0	0	0	0	0
Initial Fut:	0	0	69	0	0	0	0	0	0	114	0	0
User Adj:	1.00	1.00	1.00	1.00	1.00	1.00	1.00	1.00	1.00	1.00	1.00	1.00
PHF Adj:	1.00	1.00	1.00	1.00	1.00	1.00	1.00	1.00	1.00	1.00	1.00	1.00
PHF Volume:	0	0	69	0	0	0	0	0	0	114	0	0
Reduct Vol:	0	0	0	0	0	0	0	0	0	0	0	0
Reduced Vol:	0	0	69	0	0	0	0	0	0	114	0	0
PCE Adj:	1.00	1.00	1.00	1.00	1.00	1.00	1.00	1.00	1.00	1.00	1.00	1.00
MLF Adj:	1.00	1.00	1.00	1.00	1.00	1.00	1.00	1.00	1.00	1.00	1.00	1.00
FinalVolume:	0	0	69	0	0	0	0	0	0	114	0	0
Saturation Flow Module:												
Sat/Lane:	1600	1600	1600	1600	1600	1600	1600	1600	1600	1600	1600	1600
Adjustment:	1.00	1.00	1.00	1.00	1.00	1.00	1.00	1.00	1.00	1.00	1.00	1.00
Lanes:	0.00	1.00	1.00	0.00	1.00	0.00	0.00	0.00	0.00	1.00	0.00	0.00
Final Sat.:	0	1600	1600	0	1600	0	0	0	0	1600	0	0
Capacity Analysis Module:												
Vol/Sat:	0.00	0.00	0.04	0.00	0.00	0.00	0.00	0.00	0.00	0.07	0.00	0.00
Crit Moves:			****							****		

Newport Banning Ranch
Year 2016 with Project - TPO Analysis
PM Peak Hour

Level Of Service Computation Report
ICU 1(Loss as Cycle Length %) Method (Future Volume Alternative)

Intersection #54 Bluff Rd/17th St

Cycle (sec):	100	Critical Vol./Cap.(X):	0.207
Loss Time (sec):	0 (Y+R=4.0 sec)	Average Delay (sec/veh):	xxxxxx
Optimal Cycle:	18	Level Of Service:	A

Street Name:	Bluff Road						17th Street					
Approach:	North Bound			South Bound			East Bound			West Bound		
Movement:	L - T - R			L - T - R			L - T - R			L - T - R		
Control:	Permitted			Permitted			Permitted			Permitted		
Rights:	Include			Include			Include			Include		
Min. Green:	0	0	0	0	0	0	0	0	0	0	0	0
Lanes:	1 0 1	1 0		1 0 0	1 0		0 0 1!	0 0		1 0 1	0 1	
Volume Module:												
Base Vol:	0	0	0	0	0	0	0	0	0	0	0	0
Growth Adj:	1.00	1.00	1.00	1.00	1.00	1.00	1.00	1.00	1.00	1.00	1.00	1.00
Initial Bse:	0	0	0	0	0	0	0	0	0	0	0	0
Added Vol:	0	111	70	0	125	11	6	1	0	156	1	0
Internal Ca:	5	3	3	0	6	7	5	3	3	3	2	0
Initial Fut:	5	114	73	0	131	18	11	4	3	159	3	0
User Adj:	1.00	1.00	1.00	1.00	1.00	1.00	1.00	1.00	1.00	1.00	1.00	1.00
PHF Adj:	1.00	1.00	1.00	1.00	1.00	1.00	1.00	1.00	1.00	1.00	1.00	1.00
PHF Volume:	5	114	73	0	131	18	11	4	3	159	3	0
Reduct Vol:	0	0	0	0	0	0	0	0	0	0	0	0
Reduced Vol:	5	114	73	0	131	18	11	4	3	159	3	0
PCE Adj:	1.00	1.00	1.00	1.00	1.00	1.00	1.00	1.00	1.00	1.00	1.00	1.00
MLF Adj:	1.00	1.00	1.00	1.00	1.00	1.00	1.00	1.00	1.00	1.00	1.00	1.00
FinalVolume:	5	114	73	0	131	18	11	4	3	159	3	0
Saturation Flow Module:												
Sat/Lane:	1600	1600	1600	1600	1600	1600	1600	1600	1600	1600	1600	1600
Adjustment:	1.00	1.00	1.00	1.00	1.00	1.00	1.00	1.00	1.00	1.00	1.00	1.00
Lanes:	1.00	1.22	0.78	1.00	0.88	0.12	0.61	0.22	0.17	1.00	1.00	1.00
Final Sat.:	1600	1951	1249	1600	1407	193	978	356	267	1600	1600	1600
Capacity Analysis Module:												
Vol/Sat:	0.00	0.06	0.06	0.00	0.09	0.09	0.01	0.01	0.01	0.10	0.00	0.00
Crit Moves:	****				****			****		****		

Newport Banning Ranch
Year 2016 with Project - TPO Analysis
PM Peak Hour

Level Of Service Computation Report
2000 HCM Unsignalized Method (Future Volume Alternative)

Intersection #55 Bluff Rd/16th St

Average Delay (sec/veh): 5.4 Worst Case Level Of Service: C[19.3]

Street Name:	Bluff Road						16th Street					
Approach:	North Bound			South Bound			East Bound			West Bound		
Movement:	L - T - R			L - T - R			L - T - R			L - T - R		
Control:	Uncontrolled			Uncontrolled			Stop Sign			Stop Sign		
Rights:	Include			Include			Include			Include		
Lanes:	1 0 1	1 0		1 0 1	1 0		0 0 1!	0 0		0 0 1!	0 0	
Volume Module:												
Base Vol:	0	0	0	0	0	0	0	0	0	0	0	0
Growth Adj:	1.00	1.00	1.00	1.00	1.00	1.00	1.00	1.00	1.00	1.00	1.00	1.00
Initial Bse:	0	0	0	0	0	0	0	0	0	0	0	0
Added Vol:	25	281	33	63	310	0	0	14	14	81	25	113
Internal Ca:	0	9	0	0	12	4	2	0	0	0	0	0
Initial Fut:	25	290	33	63	322	4	2	14	14	81	25	113
User Adj:	1.00	1.00	1.00	1.00	1.00	1.00	1.00	1.00	1.00	1.00	1.00	1.00
PHF Adj:	1.00	1.00	1.00	1.00	1.00	1.00	1.00	1.00	1.00	1.00	1.00	1.00
PHF Volume:	25	290	33	63	322	4	2	14	14	81	25	113
Reduct Vol:	0	0	0	0	0	0	0	0	0	0	0	0
FinalVolume:	25	290	33	63	322	4	2	14	14	81	25	113
Critical Gap Module:												
Critical Gp:	4.1	xxxx	xxxxx	4.1	xxxx	xxxxx	7.5	6.5	6.9	7.5	6.5	6.9
FollowUpTim:	2.2	xxxx	xxxxx	2.2	xxxx	xxxxx	3.5	4.0	3.3	3.5	4.0	3.3
Capacity Module:												
Cnflict Vol:	326	xxxx	xxxxx	323	xxxx	xxxxx	658	823	163	651	809	162
Potent Cap.:	1245	xxxx	xxxxx	1248	xxxx	xxxxx	354	311	859	358	317	861
Move Cap.:	1245	xxxx	xxxxx	1248	xxxx	xxxxx	272	289	859	321	295	861
Volume/Cap:	0.02	xxxx	xxxx	0.05	xxxx	xxxx	0.01	0.05	0.02	0.25	0.08	0.13
Level Of Service Module:												
2Way95thQ:	0.1	xxxx	xxxxx	0.2	xxxx	xxxxx	xxxx	xxxx	xxxxx	xxxx	xxxx	xxxxx
Control Del:	8.0	xxxx	xxxxx	8.0	xxxx	xxxxx	xxxxx	xxxx	xxxxx	xxxxx	xxxx	xxxxx
LOS by Move:	A	*	*	A	*	*	*	*	*	*	*	*
Movement:	LT - LTR - RT			LT - LTR - RT			LT - LTR - RT			LT - LTR - RT		
Shared Cap.:	xxxx	xxxx	xxxxx	xxxx	xxxx	xxxxx	xxxx	416	xxxxx	xxxx	468	xxxxx
SharedQueue:	xxxxx	xxxx	xxxxx	xxxxx	xxxx	xxxxx	xxxxx	0.2	xxxxx	xxxxx	2.4	xxxxx
Shrd ConDel:	xxxxx	xxxx	xxxxx	xxxxx	xxxx	xxxxx	xxxxx	14.3	xxxxx	xxxxx	19.3	xxxxx
Shared LOS:	*	*	*	*	*	*	*	B	*	*	C	*
ApproachDel:	xxxxxx			xxxxxx			14.3			19.3		
ApproachLOS:	*			*			B			C		

Note: Queue reported is the number of cars per lane.

Newport Banning Ranch
Year 2016 with Project - TPO Analysis
PM Peak Hour

Level Of Service Computation Report
ICU 1(Loss as Cycle Length %) Method (Future Volume Alternative)

Intersection #56 Bluff Rd/15th St

Cycle (sec):	100	Critical Vol./Cap.(X):	0.291
Loss Time (sec):	0 (Y+R=4.0 sec)	Average Delay (sec/veh):	xxxxxx
Optimal Cycle:	26	Level Of Service:	A

Street Name:	Bluff Road						15th Street					
Approach:	North Bound			South Bound			East Bound			West Bound		
Movement:	L - T - R			L - T - R			L - T - R			L - T - R		
Control:	Split Phase			Split Phase			Permitted			Permitted		
Rights:	Include			Include			Include			Include		
Min. Green:	0	0	0	0	0	0	0	0	0	0	0	0
Lanes:	0 0 0 0 0			1 0 0 0 2			2 0 2 0 0			0 0 2 1 0		
Volume Module:												
Base Vol:	0	0	0	0	0	0	0	0	0	0	0	0
Growth Adj:	1.00	1.00	1.00	1.00	1.00	1.00	1.00	1.00	1.00	1.00	1.00	1.00
Initial Bse:	0	0	0	0	0	0	0	0	0	0	0	0
Added Vol:	0	0	0	28	0	385	337	126	0	0	262	50
Internal Ca:	0	0	0	0	0	1	1	0	0	0	0	0
Initial Fut:	0	0	0	28	0	386	338	126	0	0	262	50
User Adj:	1.00	1.00	1.00	1.00	1.00	1.00	1.00	1.00	1.00	1.00	1.00	1.00
PHF Adj:	1.00	1.00	1.00	1.00	1.00	1.00	1.00	1.00	1.00	1.00	1.00	1.00
PHF Volume:	0	0	0	28	0	386	338	126	0	0	262	50
Reduct Vol:	0	0	0	0	0	0	0	0	0	0	0	0
Reduced Vol:	0	0	0	28	0	386	338	126	0	0	262	50
PCE Adj:	1.00	1.00	1.00	1.00	1.00	1.00	1.00	1.00	1.00	1.00	1.00	1.00
MLF Adj:	1.00	1.00	1.00	1.00	1.00	1.00	1.00	1.00	1.00	1.00	1.00	1.00
FinalVolume:	0	0	0	28	0	386	338	126	0	0	262	50
Saturation Flow Module:												
Sat/Lane:	1600	1600	1600	1600	1600	1600	1600	1600	1600	1600	1600	1600
Adjustment:	1.00	1.00	1.00	1.00	1.00	1.00	1.00	1.00	1.00	1.00	1.00	1.00
Lanes:	0.00	0.00	0.00	1.00	0.00	2.00	2.00	2.00	0.00	0.00	2.52	0.48
Final Sat.:	0	0	0	1600	0	3200	3200	3200	0	0	4031	769
Capacity Analysis Module:												
Vol/Sat:	0.00	0.00	0.00	0.02	0.00	0.12	0.11	0.04	0.00	0.00	0.07	0.06
Crit Moves:						****	****				****	

Newport Banning Ranch
Year 2016 with Project - TPO Analysis
PM Peak Hour

Level Of Service Computation Report
ICU 1(Loss as Cycle Length %) Method (Future Volume Alternative)

Intersection #57 Bluff Rd/W. Coast Hwy

Cycle (sec):	120	Critical Vol./Cap.(X):	0.810
Loss Time (sec):	0 (Y+R=4.0 sec)	Average Delay (sec/veh):	xxxxxx
Optimal Cycle:	120	Level Of Service:	D

Street Name:	Bluff Road						W. Coast Highway					
Approach:	North Bound			South Bound			East Bound			West Bound		
Movement:	L - T - R			L - T - R			L - T - R			L - T - R		
Control:	Split Phase			Split Phase			Protected			Protected		
Rights:	Include			Include			Include			Include		
Min. Green:	0	0	0	0	0	0	0	0	0	0	0	0
Lanes:	0 0 0 0 0			2 0 0 0 2			2 0 3 0 0			0 0 3 0 1		
Volume Module:												
Base Vol:	0	0	0	0	0	0	0	1487	0	0	2818	0
Growth Adj:	1.00	1.00	1.00	1.00	1.00	1.00	1.00	1.07	1.00	1.00	1.07	1.00
Initial Bse:	0	0	0	0	0	0	0	1594	0	0	3021	0
Added Vol:	0	0	0	114	0	482	329	-130	0	0	-350	176
PasserByVol:	0	0	0	0	0	0	0	0	0	0	0	0
Initial Fut:	0	0	0	114	0	482	329	1464	0	0	2671	176
User Adj:	1.00	1.00	1.00	1.00	1.00	1.00	1.00	1.00	1.00	1.00	1.00	1.00
PHF Adj:	1.00	1.00	1.00	1.00	1.00	1.00	1.00	1.00	1.00	1.00	1.00	1.00
PHF Volume:	0	0	0	114	0	482	329	1464	0	0	2671	176
Reduct Vol:	0	0	0	0	0	0	0	0	0	0	0	0
Reduced Vol:	0	0	0	114	0	482	329	1464	0	0	2671	176
PCE Adj:	1.00	1.00	1.00	1.00	1.00	1.00	1.00	1.00	1.00	1.00	1.00	1.00
MLF Adj:	1.00	1.00	1.00	1.00	1.00	1.00	1.00	1.00	1.00	1.00	1.00	1.00
FinalVolume:	0	0	0	114	0	482	329	1464	0	0	2671	176
Saturation Flow Module:												
Sat/Lane:	1600	1600	1600	1600	1600	1600	1600	1600	1600	1600	1600	1600
Adjustment:	1.00	1.00	1.00	1.00	1.00	1.00	1.00	1.00	1.00	1.00	1.00	1.00
Lanes:	0.00	0.00	0.00	2.00	0.00	2.00	2.00	3.00	0.00	0.00	3.00	1.00
Final Sat.:	0	0	0	3200	0	3200	3200	4800	0	0	4800	1600
Capacity Analysis Module:												
Vol/Sat:	0.00	0.00	0.00	0.04	0.00	0.15	0.10	0.31	0.00	0.00	0.56	0.11
Crit Moves:						****	****				****	

Newport Banning Ranch
Year 2016 with Project - TPO Analysis
PM Peak Hour

Level Of Service Computation Report
2000 HCM 4-Way Stop Method (Future Volume Alternative)

Intersection #58 Monrovia Ave/15th Street

Cycle (sec):	100	Critical Vol./Cap.(X):	0.374
Loss Time (sec):	0 (Y+R=4.0 sec)	Average Delay (sec/veh):	9.3
Optimal Cycle:	0	Level Of Service:	A

Street Name:	Monrovia Ave						15th Street					
Approach:	North Bound			South Bound			East Bound			West Bound		
Movement:	L - T - R			L - T - R			L - T - R			L - T - R		
Control:	Stop Sign			Stop Sign			Stop Sign			Stop Sign		
Rights:	Include			Include			Include			Include		
Min. Green:	0	0	0	0	0	0	0	0	0	0	0	0
Lanes:	0 0 0 1 0			0 0 1! 0 0			0 1 0 0 0			0 0 1! 0 0		
Volume Module: >> Count Date: 4 May 2011 << Existing PM Peak Hour												
Base Vol:	0	5	17	92	5	1	9	7	0	11	2	42
Growth Adj:	1.00	1.00	1.00	1.00	1.00	1.00	1.00	1.00	1.00	1.00	1.00	1.00
Initial Bse:	0	5	17	92	5	1	9	7	0	11	2	42
Added Vol:	0	0	0	-21	0	63	24	130	0	0	249	-8
PasserByVol:	0	0	0	0	0	0	0	0	0	0	0	0
Initial Fut:	0	5	17	71	5	64	33	137	0	11	251	34
User Adj:	1.00	1.00	1.00	1.00	1.00	1.00	1.00	1.00	1.00	1.00	1.00	1.00
PHF Adj:	1.00	1.00	1.00	1.00	1.00	1.00	1.00	1.00	1.00	1.00	1.00	1.00
PHF Volume:	0	5	17	71	5	64	33	137	0	11	251	34
Reduct Vol:	0	0	0	0	0	0	0	0	0	0	0	0
Reduced Vol:	0	5	17	71	5	64	33	137	0	11	251	34
PCE Adj:	1.00	1.00	1.00	1.00	1.00	1.00	1.00	1.00	1.00	1.00	1.00	1.00
MLF Adj:	1.00	1.00	1.00	1.00	1.00	1.00	1.00	1.00	1.00	1.00	1.00	1.00
FinalVolume:	0	5	17	71	5	64	33	137	0	11	251	34
Saturation Flow Module:												
Adjustment:	1.00	1.00	1.00	1.00	1.00	1.00	1.00	1.00	1.00	1.00	1.00	1.00
Lanes:	0.00	0.23	0.77	0.51	0.03	0.46	0.19	0.81	0.00	0.04	0.85	0.11
Final Sat.:	0	158	538	355	25	320	145	602	0	29	672	91
Capacity Analysis Module:												
Vol/Sat:	xxxx	0.03	0.03	0.20	0.20	0.20	0.23	0.23	xxxx	0.37	0.37	0.37
Crit Moves:		****				****		****			****	
Delay/Veh:	0.0	7.8	7.8	8.9	8.9	8.9	8.9	8.9	0.0	9.9	9.9	9.9
Delay Adj:	1.00	1.00	1.00	1.00	1.00	1.00	1.00	1.00	1.00	1.00	1.00	1.00
AdjDel/Veh:	0.0	7.8	7.8	8.9	8.9	8.9	8.9	8.9	0.0	9.9	9.9	9.9
LOS by Move:	*	A	A	A	A	A	A	A	*	A	A	A
ApproachDel:		7.8			8.9			8.9			9.9	
Delay Adj:		1.00			1.00			1.00			1.00	
ApprAdjDel:		7.8			8.9			8.9			9.9	
LOS by Appr:		A			A			A			A	
AllWayAvgQ:	0.0	0.0	0.0	0.2	0.2	0.2	0.3	0.3	0.3	0.6	0.6	0.6

Newport Banning Ranch
Year 2016 with Project - TPO Analysis
PM Peak Hour

Note: Queue reported is the number of cars per lane.

Newport Banning Ranch
Year 2016 with Project - TPO Analysis
PM Peak Hour

Level Of Service Computation Report
ICU 1(Loss as Cycle Length %) Method (Future Volume Alternative)

Intersection #100 Pomona Ave/16th St

Cycle (sec):	100	Critical Vol./Cap.(X):	0.051
Loss Time (sec):	0 (Y+R=4.0 sec)	Average Delay (sec/veh):	xxxxxx
Optimal Cycle:	15	Level Of Service:	A

Street Name:	Pomona Avenue						16th Street					
Approach:	North Bound			South Bound			East Bound			West Bound		
Movement:	L - T - R			L - T - R			L - T - R			L - T - R		
Control:	Permitted			Permitted			Permitted			Permitted		
Rights:	Include			Include			Include			Include		
Min. Green:	0	0	0	0	0	0	0	0	0	0	0	0
Lanes:	0 0 0 0 0			1 0 0 1 0			1 0 0 1 0			0 0 0 1 0		
Volume Module:												
Base Vol:	0	0	0	34	56	15	0	-200	0	0	-200	0
Growth Adj:	1.07	1.07	1.07	1.07	1.07	1.07	1.07	1.07	1.07	1.07	1.07	1.07
Initial Bse:	0	0	0	36	60	16	0	-214	0	0	-214	0
Added Vol:	0	0	0	0	0	4	2	78	0	0	145	0
PasserByVol:	0	0	0	0	0	0	0	0	0	0	0	0
Initial Fut:	0	0	0	36	60	20	2	-136	0	0	-69	0
User Adj:	1.00	1.00	1.00	1.00	1.00	1.00	1.00	0.00	1.00	1.00	0.00	1.00
PHF Adj:	1.00	1.00	1.00	1.00	1.00	1.00	1.00	0.00	1.00	1.00	0.00	1.00
PHF Volume:	0	0	0	36	60	20	2	0	0	0	0	0
Reduct Vol:	0	0	0	0	0	0	0	0	0	0	0	0
Reduced Vol:	0	0	0	36	60	20	2	0	0	0	0	0
PCE Adj:	1.00	1.00	1.00	1.00	1.00	1.00	1.00	0.00	1.00	1.00	0.00	1.00
MLF Adj:	1.00	1.00	1.00	1.00	1.00	1.00	1.00	0.00	1.00	1.00	0.00	1.00
FinalVolume:	0	0	0	36	60	20	2	0	0	0	0	0
Saturation Flow Module:												
Sat/Lane:	1600	1600	1600	1600	1600	1600	1600	1600	1600	1600	1600	1600
Adjustment:	1.00	1.00	1.00	1.00	1.00	1.00	1.00	1.00	1.00	1.00	1.00	1.00
Lanes:	0.00	0.00	0.00	1.00	0.75	0.25	1.00	1.00	0.00	0.00	1.00	0.00
Final Sat.:	0	0	0	1600	1199	401	1600	1600	0	0	1600	0
Capacity Analysis Module:												
Vol/Sat:	0.00	0.00	0.00	0.02	0.05	0.05	0.00	0.00	0.00	0.00	0.00	0.00
Crit Moves:					****		****					

Newport Banning Ranch
Year 2016 with Project Bluff Road Alternative - TPO Analysis
AM Peak Hour

Scenario Report

Scenario:	TPO 2016 w/ Proj Alt AM ICU
Command:	TPO 2016 w/ Proj Alt AM ICU
Volume:	Existing+Commited AM
Geometry:	2016 Bluff to 17th ICU
Impact Fee:	Default Impact Fee
Trip Generation:	Proposed Project AM
Trip Distribution:	Project
Paths:	Bluff to 17th
Routes:	Default Route
Configuration:	2016 ICU

Newport Banning Ranch
Year 2016 with Project Bluff Road Alternative - TPO Analysis
AM Peak Hour

Level Of Service Computation Report
2000 HCM 4-Way Stop Method (Future Volume Alternative)

Intersection #1 Monrovia Ave/16th St

Cycle (sec):	100	Critical Vol./Cap.(X):	0.417
Loss Time (sec):	0 (Y+R=4.0 sec)	Average Delay (sec/veh):	10.9
Optimal Cycle:	0	Level Of Service:	B

Street Name:	Monrovia Avenue						16th Street					
Approach:	North Bound			South Bound			East Bound			West Bound		
Movement:	L -	T -	R	L -	T -	R	L -	T -	R	L -	T -	R
Control:	Stop Sign			Stop Sign			Stop Sign			Stop Sign		
Rights:	Include			Include			Include			Include		
Min. Green:	0	0	0	0	0	0	0	0	0	0	0	0
Lanes:	0 0	1! 0	0	0 0	1! 0	0	0 0	1! 0	0	0 0	1! 0	0
Volume Module:												
Base Vol:	4	92	54	35	104	19	9	20	10	112	44	44
Growth Adj:	1.00	1.00	1.00	1.00	1.00	1.00	1.00	1.00	1.00	1.00	1.00	1.00
Initial Bse:	4	92	54	35	104	19	9	20	10	112	44	44
Added Vol:	0	32	0	-8	11	15	42	193	0	0	56	-21
Committed P:	0	0	0	0	0	0	0	0	0	0	0	0
Initial Fut:	4	124	54	27	115	34	51	213	10	112	100	23
User Adj:	1.00	1.00	1.00	1.00	1.00	1.00	1.00	1.00	1.00	1.00	1.00	1.00
PHF Adj:	1.00	1.00	1.00	1.00	1.00	1.00	1.00	1.00	1.00	1.00	1.00	1.00
PHF Volume:	4	124	54	27	115	34	51	213	10	112	100	23
Reduct Vol:	0	0	0	0	0	0	0	0	0	0	0	0
Reduced Vol:	4	124	54	27	115	34	51	213	10	112	100	23
PCE Adj:	1.00	1.00	1.00	1.00	1.00	1.00	1.00	1.00	1.00	1.00	1.00	1.00
MLF Adj:	1.00	1.00	1.00	1.00	1.00	1.00	1.00	1.00	1.00	1.00	1.00	1.00
FinalVolume:	4	124	54	27	115	34	51	213	10	112	100	23
Saturation Flow Module:												
Adjustment:	1.00	1.00	1.00	1.00	1.00	1.00	1.00	1.00	1.00	1.00	1.00	1.00
Lanes:	0.02	0.68	0.30	0.15	0.66	0.19	0.18	0.78	0.04	0.48	0.42	0.10
Final Sat.:	14	425	185	94	401	118	122	511	24	307	274	63
Capacity Analysis Module:												
Vol/Sat:	0.29	0.29	0.29	0.29	0.29	0.29	0.42	0.42	0.42	0.37	0.37	0.37
Crit Moves:		****				****		****			****	
Delay/Veh:	10.2	10.2	10.2	10.3	10.3	10.3	11.5	11.5	11.5	11.0	11.0	11.0
Delay Adj:	1.00	1.00	1.00	1.00	1.00	1.00	1.00	1.00	1.00	1.00	1.00	1.00
AdjDel/Veh:	10.2	10.2	10.2	10.3	10.3	10.3	11.5	11.5	11.5	11.0	11.0	11.0
LOS by Move:	B	B	B	B	B	B	B	B	B	B	B	B
ApproachDel:		10.2			10.3			11.5			11.0	
Delay Adj:		1.00			1.00			1.00			1.00	
ApprAdjDel:		10.2			10.3			11.5			11.0	
LOS by Appr:		B			B			B			B	
AllWayAvgQ:	0.3	0.3	0.3	0.3	0.3	0.3	0.6	0.6	0.6	0.5	0.5	0.5

Newport Banning Ranch
Year 2016 with Project Bluff Road Alternative - TPO Analysis
AM Peak Hour

Note: Queue reported is the number of cars per lane.
****

Newport Banning Ranch
Year 2016 with Project Bluff Road Alternative - TPO Analysis
AM Peak Hour

Level Of Service Computation Report
ICU 1(Loss as Cycle Length %) Method (Future Volume Alternative)

Intersection #2 Placentia Ave/15th St

Cycle (sec):	100	Critical Vol./Cap.(X):	0.588
Loss Time (sec):	0 (Y+R=4.0 sec)	Average Delay (sec/veh):	xxxxxx
Optimal Cycle:	55	Level Of Service:	A

Street Name:	Placentia Ave						15th Street					
Approach:	North Bound			South Bound			East Bound			West Bound		
Movement:	L - T - R			L - T - R			L - T - R			L - T - R		
Control:	Prot+Permit			Prot+Permit			Split Phase			Split Phase		
Rights:	Include			Include			Include			Include		
Min. Green:	0	0	0	0	0	0	0	0	0	0	0	0
Lanes:	1 0 1	1 0		1 0 1	1 0		0 0 1!	0 0		0 1 0	0 1	
Volume Module:												
Base Vol:	131	425	15	25	431	19	57	51	174	4	22	75
Growth Adj:	1.00	1.00	1.00	1.00	1.00	1.00	1.00	1.00	1.00	1.00	1.00	1.00
Initial Bse:	131	425	15	25	431	19	57	51	174	4	22	75
Added Vol:	29	-168	0	0	-60	8	22	0	200	0	25	0
Committed P:	0	24	0	0	5	0	0	0	0	0	0	0
Initial Fut:	160	281	15	25	376	27	79	51	374	4	47	75
User Adj:	1.00	1.00	1.00	1.00	1.00	1.00	1.00	1.00	1.00	1.00	1.00	1.00
PHF Adj:	1.00	1.00	1.00	1.00	1.00	1.00	1.00	1.00	1.00	1.00	1.00	1.00
PHF Volume:	160	281	15	25	376	27	79	51	374	4	47	75
Reduct Vol:	0	0	0	0	0	0	0	0	0	0	0	0
Reduced Vol:	160	281	15	25	376	27	79	51	374	4	47	75
PCE Adj:	1.00	1.00	1.00	1.00	1.00	1.00	1.00	1.00	1.00	1.00	1.00	1.00
MLF Adj:	1.00	1.00	1.00	1.00	1.00	1.00	1.00	1.00	1.00	1.00	1.00	1.00
FinalVolume:	160	281	15	25	376	27	79	51	374	4	47	75
Saturation Flow Module:												
Sat/Lane:	1600	1600	1600	1600	1600	1600	1600	1600	1600	1600	1600	1600
Adjustment:	1.00	1.00	1.00	1.00	1.00	1.00	1.00	1.00	1.00	1.00	1.00	1.00
Lanes:	1.00	1.90	0.10	1.00	1.87	0.13	0.16	0.10	0.74	0.08	0.92	1.00
Final Sat.:	1600	3038	162	1600	2986	214	251	162	1187	125	1475	1600
Capacity Analysis Module:												
Vol/Sat:	0.10	0.09	0.09	0.02	0.13	0.13	0.32	0.32	0.31	0.03	0.03	0.05
Crit Moves:	****				****			****				****

Newport Banning Ranch
Year 2016 with Project Bluff Road Alternative - TPO Analysis
AM Peak Hour

Level Of Service Computation Report
2000 HCM Unsignalized Method (Future Volume Alternative)

Intersection #3 Superior Ave/15th St

Average Delay (sec/veh): 1.7 Worst Case Level Of Service: C[22.3]

Street Name:	Superior Avenue						15th Street					
Approach:	North Bound			South Bound			East Bound			West Bound		
Movement:	L - T - R			L - T - R			L - T - R			L - T - R		
Control:	Uncontrolled			Uncontrolled			Stop Sign			Stop Sign		
Rights:	Include			Include			Include			Include		
Lanes:	1 0 2 0 0			0 0 1 1 0			1 0 0 0 1			0 0 0 0 0		
Volume Module:												
Base Vol:	77	799	0	0	328	59	64	0	21	0	0	0
Growth Adj:	1.00	1.00	1.00	1.00	1.00	1.00	1.00	1.00	1.00	1.00	1.00	1.00
Initial Bse:	77	799	0	0	328	59	64	0	21	0	0	0
Added Vol:	0	68	0	0	0	25	0	0	0	0	0	0
Committed P:	0	30	0	0	27	0	0	0	0	0	0	0
Initial Fut:	77	897	0	0	355	84	64	0	21	0	0	0
User Adj:	1.00	1.00	1.00	1.00	1.00	1.00	1.00	1.00	1.00	1.00	1.00	1.00
PHF Adj:	1.00	1.00	1.00	1.00	1.00	1.00	1.00	1.00	1.00	1.00	1.00	1.00
PHF Volume:	77	897	0	0	355	84	64	0	21	0	0	0
Reduct Vol:	0	0	0	0	0	0	0	0	0	0	0	0
FinalVolume:	77	897	0	0	355	84	64	0	21	0	0	0
Critical Gap Module:												
Critical Gp:	4.1	xxxx	xxxxx	xxxxx	xxxx	xxxxx	6.8	xxxx	6.9	xxxxx	xxxx	xxxxx
FollowUpTim:	2.2	xxxx	xxxxx	xxxxx	xxxx	xxxxx	3.5	xxxx	3.3	xxxxx	xxxx	xxxxx
Capacity Module:												
Cnflict Vol:	439	xxxx	xxxxx	xxxx	xxxx	xxxxx	1000	xxxx	220	xxxx	xxxx	xxxxx
Potent Cap.:	1132	xxxx	xxxxx	xxxx	xxxx	xxxxx	243	xxxx	791	xxxx	xxxx	xxxxx
Move Cap.:	1132	xxxx	xxxxx	xxxx	xxxx	xxxxx	231	xxxx	791	xxxx	xxxx	xxxxx
Volume/Cap:	0.07	xxxx	xxxx	xxxx	xxxx	xxxx	0.28	xxxx	0.03	xxxx	xxxx	xxxx
Level Of Service Module:												
2Way95thQ:	0.2	xxxx	xxxxx	xxxx	xxxx	xxxxx	1.1	xxxx	0.1	xxxx	xxxx	xxxxx
Control Del:	8.4	xxxx	xxxxx	xxxxx	xxxx	xxxxx	26.5	xxxx	9.7	xxxxx	xxxx	xxxxx
LOS by Move:	A	*	*	*	*	*	D	*	A	*	*	*
Movement:	LT - LTR - RT			LT - LTR - RT			LT - LTR - RT			LT - LTR - RT		
Shared Cap.:	xxxx	xxxx	xxxxx	xxxx	xxxx	xxxxx	xxxx	xxxx	xxxxx	xxxx	xxxx	xxxxx
SharedQueue:	xxxxx	xxxx	xxxxx	xxxxx	xxxx	xxxxx	xxxxx	xxxx	xxxxx	xxxxx	xxxx	xxxxx
Shrd ConDel:	xxxxx	xxxx	xxxxx	xxxxx	xxxx	xxxxx	xxxxx	xxxx	xxxxx	xxxxx	xxxx	xxxxx
Shared LOS:	*	*	*	*	*	*	*	*	*	*	*	*
ApproachDel:	xxxxxx			xxxxxx			22.3			xxxxxx		
ApproachLOS:	*			*			C			*		

Note: Queue reported is the number of cars per lane.

Newport Banning Ranch
Year 2016 with Project Bluff Road Alternative - TPO Analysis
AM Peak Hour

Level Of Service Computation Report
ICU 1(Loss as Cycle Length %) Method (Future Volume Alternative)

Intersection #4 Superior Ave/Placentia Ave

Cycle (sec):	100	Critical Vol./Cap.(X):	0.513
Loss Time (sec):	0 (Y+R=4.0 sec)	Average Delay (sec/veh):	xxxxxx
Optimal Cycle:	38	Level Of Service:	A

Street Name:	Superior Avenue						Placentia Avenue					
Approach:	North Bound			South Bound			East Bound			West Bound		
Movement:	L - T - R			L - T - R			L - T - R			L - T - R		
Control:	Protected			Protected			Permitted			Permitted		
Rights:	Include			Include			Include			Include		
Min. Green:	0	0	0	0	0	0	0	0	0	0	0	0
Lanes:	1 0 1	1 0		1 0 1	1 0		1 0 1	0 1		0 1 0	1 0	
Volume Module:												
Base Vol:	346	803	33	57	243	9	18	325	268	8	227	61
Growth Adj:	1.00	1.00	1.00	1.00	1.00	1.00	1.00	1.00	1.00	1.00	1.00	1.00
Initial Bse:	346	803	33	57	243	9	18	325	268	8	227	61
Added Vol:	-189	-140	0	0	-50	50	208	0	-68	0	0	0
Committed P:	0	30	0	12	15	0	0	5	0	4	24	0
Initial Fut:	157	693	33	69	208	59	226	330	200	12	251	61
User Adj:	1.00	1.00	1.00	1.00	1.00	1.00	1.00	1.00	1.00	1.00	1.00	1.00
PHF Adj:	1.00	1.00	1.00	1.00	1.00	1.00	1.00	1.00	1.00	1.00	1.00	1.00
PHF Volume:	157	693	33	69	208	59	226	330	200	12	251	61
Reduct Vol:	0	0	0	0	0	0	0	0	0	0	0	0
Reduced Vol:	157	693	33	69	208	59	226	330	200	12	251	61
PCE Adj:	1.00	1.00	1.00	1.00	1.00	1.00	1.00	1.00	1.00	1.00	1.00	1.00
MLF Adj:	1.00	1.00	1.00	1.00	1.00	1.00	1.00	1.00	1.00	1.00	1.00	1.00
FinalVolume:	157	693	33	69	208	59	226	330	200	12	251	61
Saturation Flow Module:												
Sat/Lane:	1600	1600	1600	1600	1600	1600	1600	1600	1600	1600	1600	1600
Adjustment:	1.00	1.00	1.00	1.00	1.00	1.00	1.00	1.00	1.00	1.00	1.00	1.00
Lanes:	1.00	1.91	0.09	1.00	1.56	0.44	1.00	1.00	1.00	0.07	1.55	0.38
Final Sat.:	1600	3055	145	1600	2493	707	1600	1600	1600	119	2479	602
Capacity Analysis Module:												
Vol/Sat:	0.10	0.23	0.23	0.04	0.08	0.08	0.14	0.21	0.13	0.01	0.10	0.10
Crit Moves:		****		****			****				****	

Newport Banning Ranch
Year 2016 with Project Bluff Road Alternative - TPO Analysis
AM Peak Hour

Level Of Service Computation Report
ICU 1(Loss as Cycle Length %) Method (Future Volume Alternative)

Intersection #5 Hospital Rd/Newport Blvd

Cycle (sec):	120	Critical Vol./Cap.(X):	0.525
Loss Time (sec):	0 (Y+R=4.0 sec)	Average Delay (sec/veh):	xxxxxx
Optimal Cycle:	48	Level Of Service:	A

Street Name:	Newport Boulevard						Hospital Road					
Approach:	North Bound			South Bound			East Bound			West Bound		
Movement:	L - T - R			L - T - R			L - T - R			L - T - R		
Control:	Protected			Protected			Protected			Protected		
Rights:	Include			Include			Include			Include		
Min. Green:	0	0	0	0	0	0	0	0	0	0	0	0
Lanes:	1 0 3 0 1			1 0 3 0 1			2 0 1 0 1			1 0 1 1 0		
Volume Module:												
Base Vol:	129	1373	96	56	1066	368	197	124	199	65	224	28
Growth Adj:	1.07	1.07	1.07	1.07	1.07	1.07	1.00	1.00	1.00	1.00	1.00	1.00
Initial Bse:	138	1472	103	60	1143	394	197	124	199	65	224	28
Added Vol:	0	0	0	0	0	0	0	0	0	0	0	0
Committed P:	23	49	0	0	64	10	12	0	9	0	1	0
Initial Fut:	161	1521	103	60	1207	404	209	124	208	65	225	28
User Adj:	1.00	1.00	1.00	1.00	1.00	1.00	1.00	1.00	1.00	1.00	1.00	1.00
PHF Adj:	1.00	1.00	1.00	1.00	1.00	1.00	1.00	1.00	1.00	1.00	1.00	1.00
PHF Volume:	161	1521	103	60	1207	404	209	124	208	65	225	28
Reduct Vol:	0	0	0	0	0	0	0	0	0	0	0	0
Reduced Vol:	161	1521	103	60	1207	404	209	124	208	65	225	28
PCE Adj:	1.00	1.00	1.00	1.00	1.00	1.00	1.00	1.00	1.00	1.00	1.00	1.00
MLF Adj:	1.00	1.00	1.00	1.00	1.00	1.00	1.00	1.00	1.00	1.00	1.00	1.00
FinalVolume:	161	1521	103	60	1207	404	209	124	208	65	225	28
Saturation Flow Module:												
Sat/Lane:	1600	1600	1600	1600	1600	1600	1600	1600	1600	1600	1600	1600
Adjustment:	1.00	1.00	1.00	1.00	1.00	1.00	1.00	1.00	1.00	1.00	1.00	1.00
Lanes:	1.00	3.00	1.00	1.00	3.00	1.00	2.00	1.00	1.00	1.00	1.78	0.22
Final Sat.:	1600	4800	1600	1600	4800	1600	3200	1600	1600	1600	2846	354
Capacity Analysis Module:												
Vol/Sat:	0.10	0.32	0.06	0.04	0.25	0.25	0.07	0.08	0.13	0.04	0.08	0.08
Crit Moves:		****		****					****	****		

Newport Banning Ranch
Year 2016 with Project Bluff Road Alternative - TPO Analysis
AM Peak Hour

Level Of Service Computation Report
ICU 1(Loss as Cycle Length %) Method (Future Volume Alternative)

Intersection #6 Orange St/W. Coast Hwy

Cycle (sec):	120	Critical Vol./Cap.(X):	0.804
Loss Time (sec):	0 (Y+R=4.0 sec)	Average Delay (sec/veh):	xxxxxx
Optimal Cycle:	95	Level Of Service:	D

Street Name:	Orange Street									W. Coast Highway								
Approach:	North Bound					South Bound				East Bound					West Bound			
Movement:	L	-	T	-	R	L	-	T	-	R	L	-	T	-	R	L	-	T	-	R
Control:	Permitted					Permitted					Protected					Protected				
Rights:	Include					Include					Include					Include				
Min. Green:	0	0	0			0	0	0			0	0	0			0	0	0		
Lanes:	0	1	0	0	1	0	1	0	0	1	1	0	2	1	0	1	0	3	0	1
Volume Module:																				
Base Vol:	49		1		70	40		2		19	11		3095		10	43		870		17
Growth Adj:	1.00	1.00	1.00	1.00	1.00	1.00	1.00	1.00	1.00	1.00	1.07	1.07	1.07	1.07	1.07	1.07	1.07	1.07	1.07	1.07
Initial Bse:	49		1		70	40		2		19	12		3318		11	46		933		18
Added Vol:	0		0		0	0		0		0	0		56		0	0		152		0
Committed P:	0		0		0	0		0		0	0		62		0	0		37		0
Initial Fut:	49		1		70	40		2		19	12		3436		11	46		1122		18
User Adj:	1.00	1.00	1.00	1.00	1.00	1.00	1.00	1.00	1.00	1.00	1.00	1.00	1.00	1.00	1.00	1.00	1.00	1.00	1.00	1.00
PHF Adj:	1.00	1.00	1.00	1.00	1.00	1.00	1.00	1.00	1.00	1.00	1.00	1.00	1.00	1.00	1.00	1.00	1.00	1.00	1.00	1.00
PHF Volume:	49		1		70	40		2		19	12		3436		11	46		1122		18
Reduct Vol:	0		0		0	0		0		0	0		0		0	0		0		0
Reduced Vol:	49		1		70	40		2		19	12		3436		11	46		1122		18
PCE Adj:	1.00	1.00	1.00	1.00	1.00	1.00	1.00	1.00	1.00	1.00	1.00	1.00	1.00	1.00	1.00	1.00	1.00	1.00	1.00	1.00
MLF Adj:	1.00	1.00	1.00	1.00	1.00	1.00	1.00	1.00	1.00	1.00	1.00	1.00	1.00	1.00	1.00	1.00	1.00	1.00	1.00	1.00
FinalVolume:	49		1		70	40		2		19	12		3436		11	46		1122		18
Saturation Flow Module:																				
Sat/Lane:	1600	1600	1600	1600	1600	1600	1600	1600	1600	1600	1600	1600	1600	1600	1600	1600	1600	1600	1600	1600
Adjustment:	1.00	1.00	1.00	1.00	1.00	1.00	1.00	1.00	1.00	1.00	1.00	1.00	1.00	1.00	1.00	1.00	1.00	1.00	1.00	1.00
Lanes:	0.98	0.02	1.00	0.95	0.05	1.00	1.00	1.00	1.00	1.00	1.00	1.00	2.99	0.01	1.00	1.00	1.00	3.00	1.00	1.00
Final Sat.:	1568		32		1600	1524		76		1600	1600		4785		15	1600		4800		1600
Capacity Analysis Module:																				
Vol/Sat:	0.03	0.03	0.04	0.03	0.03	0.01	0.01	0.72	0.72	0.03	0.23	0.01								
Crit Moves:	****					****				****						****				

Newport Banning Ranch
Year 2016 with Project Bluff Road Alternative - TPO Analysis
AM Peak Hour

Level Of Service Computation Report
ICU 1(Loss as Cycle Length %) Method (Future Volume Alternative)

Intersection #7 Prospect St/W. Coast Hwy

Cycle (sec):	120	Critical Vol./Cap.(X):	0.787
Loss Time (sec):	0 (Y+R=4.0 sec)	Average Delay (sec/veh):	xxxxxx
Optimal Cycle:	87	Level Of Service:	C

Street Name:	Prospect Street						W. Coast Highway					
Approach:	North Bound			South Bound			East Bound			West Bound		
Movement:	L - T - R			L - T - R			L - T - R			L - T - R		
Control:	Permitted			Permitted			Protected			Protected		
Rights:	Include			Include			Include			Include		
Min. Green:	0	0	0	0	0	0	0	0	0	0	0	0
Lanes:	0 1	0 0	1	0 0	1! 0	0	1 0	2 1	0	1 0	2 1	0
Volume Module:												
Base Vol:	19	0	33	267	0	7	17	2490	5	26	1112	34
Growth Adj:	1.00	1.00	1.00	1.00	1.00	1.00	1.07	1.07	1.07	1.07	1.07	1.07
Initial Bse:	19	0	33	267	0	7	18	2669	5	28	1192	36
Added Vol:	0	0	0	0	0	0	0	56	0	0	152	0
Committed P:	0	0	0	0	0	0	0	62	0	0	37	0
Initial Fut:	19	0	33	267	0	7	18	2787	5	28	1381	36
User Adj:	1.00	1.00	1.00	1.00	1.00	1.00	1.00	1.00	1.00	1.00	1.00	1.00
PHF Adj:	1.00	1.00	1.00	1.00	1.00	1.00	1.00	1.00	1.00	1.00	1.00	1.00
PHF Volume:	19	0	33	267	0	7	18	2787	5	28	1381	36
Reduct Vol:	0	0	0	0	0	0	0	0	0	0	0	0
Reduced Vol:	19	0	33	267	0	7	18	2787	5	28	1381	36
PCE Adj:	1.00	1.00	1.00	1.00	1.00	1.00	1.00	1.00	1.00	1.00	1.00	1.00
MLF Adj:	1.00	1.00	1.00	1.00	1.00	1.00	1.00	1.00	1.00	1.00	1.00	1.00
FinalVolume:	19	0	33	267	0	7	18	2787	5	28	1381	36
Saturation Flow Module:												
Sat/Lane:	1600	1600	1600	1600	1600	1600	1600	1600	1600	1600	1600	1600
Adjustment:	1.00	1.00	1.00	1.00	1.00	1.00	1.00	1.00	1.00	1.00	1.00	1.00
Lanes:	1.00	0.00	1.00	0.97	0.00	0.03	1.00	2.99	0.01	1.00	2.92	0.08
Final Sat.:	1600	0	1600	1559	0	41	1600	4791	9	1600	4677	123
Capacity Analysis Module:												
Vol/Sat:	0.01	0.00	0.02	0.17	0.00	0.17	0.01	0.58	0.58	0.02	0.30	0.30
Crit Moves:			****	****				****		****		

Newport Banning Ranch
Year 2016 with Project Bluff Road Alternative - TPO Analysis
AM Peak Hour

Level Of Service Computation Report
ICU 1(Loss as Cycle Length %) Method (Future Volume Alternative)

Intersection #8 W. Coast Hwy/Superior Ave

Cycle (sec):	120	Critical Vol./Cap.(X):	0.707
Loss Time (sec):	0 (Y+R=4.0 sec)	Average Delay (sec/veh):	xxxxxx
Optimal Cycle:	78	Level Of Service:	C

Street Name:	Superior Avenue						W. Coast Highway					
Approach:	North Bound			South Bound			East Bound			West Bound		
Movement:	L - T - R			L - T - R			L - T - R			L - T - R		
Control:	Split Phase			Split Phase			Protected			Protected		
Rights:	Include			Ovl			Include			Include		
Min. Green:	0	0	0	0	0	0	0	0	0	0	0	0
Lanes:	1 1 0	1 0		1 1 1	0 2		2 0 3	0 1		1 0 3	1 0	
Volume Module:												
Base Vol:	168	266	114	170	165	247	709	1914	211	95	768	155
Growth Adj:	1.00	1.00	1.00	1.00	1.00	1.00	1.07	1.07	1.07	1.07	1.07	1.07
Initial Bse:	168	266	114	170	165	247	760	2052	226	102	823	166
Added Vol:	15	0	0	0	0	-118	-329	69	39	0	27	0
Committed P:	1	6	0	0	3	12	24	49	0	0	42	0
Initial Fut:	184	272	114	170	168	141	455	2170	265	102	892	166
User Adj:	1.00	1.00	1.00	1.00	1.00	1.00	1.00	1.00	1.00	1.00	1.00	1.00
PHF Adj:	1.00	1.00	1.00	1.00	1.00	1.00	1.00	1.00	1.00	1.00	1.00	1.00
PHF Volume:	184	272	114	170	168	141	455	2170	265	102	892	166
Reduct Vol:	0	0	0	0	0	0	0	0	0	0	0	0
Reduced Vol:	184	272	114	170	168	141	455	2170	265	102	892	166
PCE Adj:	1.00	1.00	1.00	1.00	1.00	1.00	1.00	1.00	1.00	1.00	1.00	1.00
MLF Adj:	1.00	1.00	1.00	1.00	1.00	1.00	1.00	1.00	1.00	1.00	1.00	1.00
FinalVolume:	184	272	114	170	168	141	455	2170	265	102	892	166
OvlAdjVol:						0						
Saturation Flow Module:												
Sat/Lane:	1600	1600	1600	1600	1600	1600	1600	1600	1600	1600	1600	1600
Adjustment:	1.00	1.00	1.00	1.00	1.00	1.00	1.00	1.00	1.00	1.00	1.00	1.00
Lanes:	1.00	1.40	0.60	1.51	1.49	2.00	2.00	3.00	1.00	1.00	3.37	0.63
Final Sat.:	1600	2241	959	2414	2386	3200	3200	4800	1600	1600	5395	1005
Capacity Analysis Module:												
Vol/Sat:	0.12	0.12	0.12	0.07	0.07	0.04	0.14	0.45	0.17	0.06	0.17	0.17
OvlAdjV/S:						0.00						
Crit Moves:	****			****				****		****		

Newport Banning Ranch
Year 2016 with Project Bluff Road Alternative - TPO Analysis
AM Peak Hour

Level Of Service Computation Report
ICU 1(Loss as Cycle Length %) Method (Future Volume Alternative)

Intersection #9 Newport Blvd/W. Coast Hwy

Cycle (sec):	120	Critical Vol./Cap.(X):	0.925
Loss Time (sec):	0 (Y+R=4.0 sec)	Average Delay (sec/veh):	xxxxxx
Optimal Cycle:	180	Level Of Service:	E

Street Name:	Newport Boulevard									W. Coast Highway								
Approach:	North Bound					South Bound				East Bound					West Bound			
Movement:	L	-	T	-	R	L	-	T	-	R	L	-	T	-	R	L	-	T	-	R
Control:	Protected					Protected					Protected					Protected				
Rights:	Include					Include					Ignore					Ignore				
Min. Green:	0	0	0			0	0	0			0	0	0			0	0	0		
Lanes:	0	0	0	0	0	2	0	0	0	1	0	0	2	0	1	0	0	3	0	1
Volume Module:																				
Base Vol:	0		0		0	383		0		288	0		2082		188	0		812		349
Growth Adj:	1.00		1.00		1.00	1.00		1.00		1.00	1.00		1.07		1.07	1.00		1.07		1.07
Initial Bse:	0		0		0	383		0		288	0		2232		202	0		870		374
Added Vol:	0		0		0	0		0		0	0		69		0	0		27		0
Committed P:	0		0		0	17		0		35	0		12		4	0		42		0
Initial Fut:	0		0		0	400		0		323	0		2313		206	0		939		374
User Adj:	1.00		1.00		1.00	1.00		1.00		1.00	1.00		1.00		0.00	1.00		1.00		0.00
PHF Adj:	1.00		1.00		1.00	1.00		1.00		1.00	1.00		1.00		0.00	1.00		1.00		0.00
PHF Volume:	0		0		0	400		0		323	0		2313		0	0		939		0
Reduct Vol:	0		0		0	0		0		0	0		0		0	0		0		0
Reduced Vol:	0		0		0	400		0		323	0		2313		0	0		939		0
PCE Adj:	1.00		1.00		1.00	1.00		1.00		1.00	1.00		1.00		0.00	1.00		1.00		0.00
MLF Adj:	1.00		1.00		1.00	1.00		1.00		1.00	1.00		1.00		0.00	1.00		1.00		0.00
FinalVolume:	0		0		0	400		0		323	0		2313		0	0		939		0
Saturation Flow Module:																				
Sat/Lane:	1600		1600		1600	1600		1600		1600	1600		1600		1600	1600		1600		1600
Adjustment:	1.00		1.00		1.00	1.00		1.00		1.00	1.00		1.00		1.00	1.00		1.00		1.00
Lanes:	0.00		0.00		0.00	2.00		0.00		1.00	0.00		2.00		1.00	0.00		3.00		1.00
Final Sat.:	0		0		0	3200		0		1600	0		3200		1600	0		4800		1600
Capacity Analysis Module:																				
Vol/Sat:	0.00		0.00		0.00	0.13		0.00		0.20	0.00		0.72		0.00	0.00		0.20		0.00
Crit Moves:										****			****			****				

Newport Banning Ranch
Year 2016 with Project Bluff Road Alternative - TPO Analysis
AM Peak Hour

Level Of Service Computation Report
ICU 1(Loss as Cycle Length %) Method (Future Volume Alternative)

Intersection #10 Riverside Ave/W. Coast Hwy

Cycle (sec):	120	Critical Vol./Cap.(X):	0.746
Loss Time (sec):	0 (Y+R=4.0 sec)	Average Delay (sec/veh):	xxxxxx
Optimal Cycle:	73	Level Of Service:	C

Street Name:	Riverside Avenue						W. Coast Highway					
Approach:	North Bound			South Bound			East Bound			West Bound		
Movement:	L - T - R			L - T - R			L - T - R			L - T - R		
Control:	Permitted			Permitted			Protected			Protected		
Rights:	Include			Ovl			Include			Include		
Min. Green:	0	0	0	0	0	0	0	0	0	0	0	0
Lanes:	0 0 0 0 1			0 1 0 0 1			1 0 1 1 0			1 0 3 0 1		
Volume Module:												
Base Vol:	0	0	1	77	4	304	312	1893	4	17	1124	67
Growth Adj:	1.00	1.00	1.00	1.00	1.00	1.00	1.07	1.07	1.07	1.07	1.07	1.07
Initial Bse:	0	0	1	77	4	304	334	2029	4	18	1205	72
Added Vol:	0	0	0	0	0	4	13	56	0	0	23	0
Committed P:	0	0	0	2	0	0	0	103	0	0	92	1
Initial Fut:	0	0	1	79	4	308	347	2188	4	18	1320	73
User Adj:	1.00	1.00	1.00	1.00	1.00	1.00	1.00	1.00	1.00	1.00	1.00	1.00
PHF Adj:	1.00	1.00	1.00	1.00	1.00	1.00	1.00	1.00	1.00	1.00	1.00	1.00
PHF Volume:	0	0	1	79	4	308	347	2188	4	18	1320	73
Reduct Vol:	0	0	0	0	0	0	0	0	0	0	0	0
Reduced Vol:	0	0	1	79	4	308	347	2188	4	18	1320	73
PCE Adj:	1.00	1.00	1.00	1.00	1.00	1.00	1.00	1.00	1.00	1.00	1.00	1.00
MLF Adj:	1.00	1.00	1.00	1.00	1.00	1.00	1.00	1.00	1.00	1.00	1.00	1.00
FinalVolume:	0	0	1	79	4	308	347	2188	4	18	1320	73
OvlAdjVol:						0						
Saturation Flow Module:												
Sat/Lane:	1600	1600	1600	1600	1600	1600	1600	1600	1600	1600	1600	1600
Adjustment:	1.00	1.00	1.00	1.00	1.00	1.00	1.00	1.00	1.00	1.00	1.00	1.00
Lanes:	0.00	0.00	1.00	0.95	0.05	1.00	1.00	1.99	0.01	1.00	3.00	1.00
Final Sat.:	0	0	1600	1523	77	1600	1600	3194	6	1600	4800	1600
Capacity Analysis Module:												
Vol/Sat:	0.00	0.00	0.00	0.05	0.05	0.19	0.22	0.69	0.69	0.01	0.27	0.05
OvlAdjV/S:						0.00						
Crit Moves:	****			****				****		****		

Newport Banning Ranch
Year 2016 with Project Bluff Road Alternative - TPO Analysis
AM Peak Hour

Level Of Service Computation Report
ICU 1(Loss as Cycle Length %) Method (Future Volume Alternative)

Intersection #11 Tustin Ave/W. Coast Hwy

Cycle (sec):	120	Critical Vol./Cap.(X):	0.749
Loss Time (sec):	0 (Y+R=4.0 sec)	Average Delay (sec/veh):	xxxxxx
Optimal Cycle:	180	Level Of Service:	C

Street Name:	Tustin Avenue						W. Coast Highway					
Approach:	North Bound			South Bound			East Bound			West Bound		
Movement:	L - T - R			L - T - R			L - T - R			L - T - R		
Control:	Permitted			Permitted			Protected			Permitted		
Rights:	Include			Include			Include			Include		
Min. Green:	0	0	0	0	0	0	0	0	0	0	0	0
Lanes:	0 0	1! 0	0	0 0	1! 0	0	1 0	1	1 0	0 0	3 0	1
Volume Module:												
Base Vol:	0	0	0	33	1	14	42	1992	1	0	1220	35
Growth Adj:	1.00	1.00	1.00	1.00	1.00	1.00	1.07	1.07	1.07	1.07	1.07	1.07
Initial Bse:	0	0	0	33	1	14	45	2135	1	0	1308	38
Added Vol:	0	0	0	0	0	8	17	40	0	0	16	0
Committed P:	0	0	0	0	0	0	0	108	0	0	93	0
Initial Fut:	0	0	0	33	1	22	62	2283	1	0	1417	38
User Adj:	1.00	1.00	1.00	1.00	1.00	1.00	1.00	1.00	1.00	1.00	1.00	1.00
PHF Adj:	1.00	1.00	1.00	1.00	1.00	1.00	1.00	1.00	1.00	1.00	1.00	1.00
PHF Volume:	0	0	0	33	1	22	62	2283	1	0	1417	38
Reduct Vol:	0	0	0	0	0	0	0	0	0	0	0	0
Reduced Vol:	0	0	0	33	1	22	62	2283	1	0	1417	38
PCE Adj:	1.00	1.00	1.00	1.00	1.00	1.00	1.00	1.00	1.00	1.00	1.00	1.00
MLF Adj:	1.00	1.00	1.00	1.00	1.00	1.00	1.00	1.00	1.00	1.00	1.00	1.00
FinalVolume:	0	0	0	33	1	22	62	2283	1	0	1417	38
Saturation Flow Module:												
Sat/Lane:	1600	1600	1600	1600	1600	1600	1600	1600	1600	1600	1600	1600
Adjustment:	1.00	1.00	1.00	1.00	1.00	1.00	1.00	1.00	1.00	1.00	1.00	1.00
Lanes:	0.00	1.00	0.00	0.59	0.02	0.39	1.00	1.99	0.01	0.00	3.00	1.00
Final Sat.:	0	1600	0	943	29	629	1600	3198	2	0	4800	1600
Capacity Analysis Module:												
Vol/Sat:	0.00	0.00	0.00	0.02	0.03	0.03	0.04	0.71	0.71	0.00	0.30	0.02
Crit Moves:					****			****				

Newport Banning Ranch
Year 2016 with Project Bluff Road Alternative - TPO Analysis
AM Peak Hour

Level Of Service Computation Report
ICU 1(Loss as Cycle Length %) Method (Future Volume Alternative)

Intersection #12 Dover Dr/W. Coast Hwy

Cycle (sec):	120	Critical Vol./Cap.(X):	0.693
Loss Time (sec):	0 (Y+R=4.0 sec)	Average Delay (sec/veh):	xxxxxx
Optimal Cycle:	74	Level Of Service:	B

Street Name:	Dover Drive						W. Coast Highway					
Approach:	North Bound			South Bound			East Bound			West Bound		
Movement:	L - T - R			L - T - R			L - T - R			L - T - R		
Control:	Split Phase			Split Phase			Protected			Protected		
Rights:	Include			Include			Include			Ignore		
Min. Green:	0	0	0	0	0	0	0	0	0	0	0	0
Lanes:	1 0 1	1 0		3 0 1	0 1		2 0 2	1 0		1 0 3	0 1	
Volume Module:												
Base Vol:	16	61	29	840	51	108	117	1912	25	42	1212	469
Growth Adj:	1.00	1.00	1.00	1.00	1.00	1.00	1.07	1.07	1.07	1.07	1.07	1.07
Initial Bse:	16	61	29	840	51	108	125	2050	27	45	1299	503
Added Vol:	0	0	0	0	0	0	0	40	0	0	16	0
Committed P:	0	0	0	9	0	18	10	93	0	0	91	7
Initial Fut:	16	61	29	849	51	126	135	2183	27	45	1406	510
User Adj:	1.00	1.00	1.00	1.00	1.00	1.00	1.00	1.00	1.00	1.00	1.00	0.00
PHF Adj:	1.00	1.00	1.00	1.00	1.00	1.00	1.00	1.00	1.00	1.00	1.00	0.00
PHF Volume:	16	61	29	849	51	126	135	2183	27	45	1406	0
Reduct Vol:	0	0	0	0	0	0	0	0	0	0	0	0
Reduced Vol:	16	61	29	849	51	126	135	2183	27	45	1406	0
PCE Adj:	1.00	1.00	1.00	1.00	1.00	1.00	1.00	1.00	1.00	1.00	1.00	0.00
MLF Adj:	1.00	1.00	1.00	1.00	1.00	1.00	1.00	1.00	1.00	1.00	1.00	0.00
FinalVolume:	16	61	29	849	51	126	135	2183	27	45	1406	0
Saturation Flow Module:												
Sat/Lane:	1600	1600	1600	1600	1600	1600	1600	1600	1600	1600	1600	1600
Adjustment:	1.00	1.00	1.00	1.00	1.00	1.00	1.00	1.00	1.00	1.00	1.00	1.00
Lanes:	1.00	1.36	0.64	3.00	1.00	1.00	2.00	2.96	0.04	1.00	3.00	1.00
Final Sat.:	1600	2169	1031	4800	1600	1600	3200	4742	58	1600	4800	1600
Capacity Analysis Module:												
Vol/Sat:	0.01	0.03	0.03	0.18	0.03	0.08	0.04	0.46	0.46	0.03	0.29	0.00
Crit Moves:			****	****				****		****		

Newport Banning Ranch
Year 2016 with Project Bluff Road Alternative - TPO Analysis
AM Peak Hour

Level Of Service Computation Report
ICU 1(Loss as Cycle Length %) Method (Future Volume Alternative)

Intersection #13 Magnolia St/Hamilton Ave

Cycle (sec):	100	Critical Vol./Cap.(X):	0.591
Loss Time (sec):	5 (Y+R=4.0 sec)	Average Delay (sec/veh):	xxxxxx
Optimal Cycle:	28	Level Of Service:	A

Street Name:	Magnolia Street						Hamilton Avenue					
Approach:	North Bound			South Bound			East Bound			West Bound		
Movement:	L - T - R			L - T - R			L - T - R			L - T - R		
Control:	Prot+Permit			Prot+Permit			Permitted			Permitted		
Rights:	Include			Include			Include			Include		
Min. Green:	0	0	0	0	0	0	0	0	0	0	0	0
Lanes:	1 0 1	1 0		1 0 2	0 1		1 0 0	1 0		1 0 1	0 1	
Volume Module:												
Base Vol:	56	241	42	197	303	35	67	273	145	66	172	368
Growth Adj:	1.07	1.07	1.07	1.07	1.07	1.07	1.07	1.07	1.07	1.07	1.07	1.07
Initial Bse:	60	258	45	211	325	38	72	293	155	71	184	394
Added Vol:	27	29	0	5	9	0	0	5	9	0	11	9
Committed P:	2	3	0	0	6	0	0	0	3	0	0	0
Initial Fut:	89	290	45	216	340	38	72	298	167	71	195	403
User Adj:	1.00	1.00	1.00	1.00	1.00	1.00	1.00	1.00	1.00	1.00	1.00	1.00
PHF Adj:	1.00	1.00	1.00	1.00	1.00	1.00	1.00	1.00	1.00	1.00	1.00	1.00
PHF Volume:	89	290	45	216	340	38	72	298	167	71	195	403
Reduct Vol:	0	0	0	0	0	0	0	0	0	0	0	0
Reduced Vol:	89	290	45	216	340	38	72	298	167	71	195	403
PCE Adj:	1.00	1.00	1.00	1.00	1.00	1.00	1.00	1.00	1.00	1.00	1.00	1.00
MLF Adj:	1.00	1.00	1.00	1.00	1.00	1.00	1.00	1.00	1.00	1.00	1.00	1.00
FinalVolume:	89	290	45	216	340	38	72	298	167	71	195	403
Saturation Flow Module:												
Sat/Lane:	1600	1600	1600	1600	1600	1600	1600	1600	1600	1600	1600	1600
Adjustment:	1.06	1.06	1.06	1.06	1.06	1.06	1.06	1.06	1.06	1.06	1.06	1.06
Lanes:	1.00	1.73	0.27	1.00	2.00	1.00	1.00	0.64	0.36	1.00	1.00	1.00
Final Sat.:	1700	2944	456	1700	3400	1700	1700	1088	612	1700	1700	1700
Capacity Analysis Module:												
Vol/Sat:	0.05	0.10	0.10	0.13	0.10	0.02	0.04	0.27	0.27	0.04	0.11	0.24
Crit Moves:		****		****				****		****		

Newport Banning Ranch
Year 2016 with Project Bluff Road Alternative - TPO Analysis
AM Peak Hour

Level Of Service Computation Report
ICU 1(Loss as Cycle Length %) Method (Future Volume Alternative)

Intersection #14 Bushard St/Hamilton Ave

Cycle (sec):	100	Critical Vol./Cap.(X):	0.452
Loss Time (sec):	5 (Y+R=4.0 sec)	Average Delay (sec/veh):	xxxxxx
Optimal Cycle:	22	Level Of Service:	A

Street Name:	Bushard Street						Hamilton Avenue					
Approach:	North Bound			South Bound			East Bound			West Bound		
Movement:	L - T - R			L - T - R			L - T - R			L - T - R		
Control:	Permitted			Permitted			Permitted			Permitted		
Rights:	Include			Include			Include			Include		
Min. Green:	0	0	0	0	0	0	0	0	0	0	0	0
Lanes:	1 0	1 1	0	1 0	1 1	0	1 0	1 1	0	1 0	1 1	0
Volume Module:												
Base Vol:	66	176	51	188	297	145	59	526	33	52	409	94
Growth Adj:	1.07	1.07	1.07	1.07	1.07	1.07	1.07	1.07	1.07	1.07	1.07	1.07
Initial Bse:	71	189	55	202	318	155	63	564	35	56	438	101
Added Vol:	0	0	0	0	0	0	0	10	0	0	21	0
Committed P:	0	0	0	0	0	0	0	0	0	0	0	0
Initial Fut:	71	189	55	202	318	155	63	574	35	56	459	101
User Adj:	1.00	1.00	1.00	1.00	1.00	1.00	1.00	1.00	1.00	1.00	1.00	1.00
PHF Adj:	1.00	1.00	1.00	1.00	1.00	1.00	1.00	1.00	1.00	1.00	1.00	1.00
PHF Volume:	71	189	55	202	318	155	63	574	35	56	459	101
Reduct Vol:	0	0	0	0	0	0	0	0	0	0	0	0
Reduced Vol:	71	189	55	202	318	155	63	574	35	56	459	101
PCE Adj:	1.00	1.00	1.00	1.00	1.00	1.00	1.00	1.00	1.00	1.00	1.00	1.00
MLF Adj:	1.00	1.00	1.00	1.00	1.00	1.00	1.00	1.00	1.00	1.00	1.00	1.00
FinalVolume:	71	189	55	202	318	155	63	574	35	56	459	101
Saturation Flow Module:												
Sat/Lane:	1600	1600	1600	1600	1600	1600	1600	1600	1600	1600	1600	1600
Adjustment:	1.06	1.06	1.06	1.06	1.06	1.06	1.06	1.06	1.06	1.06	1.06	1.06
Lanes:	1.00	1.55	0.45	1.00	1.34	0.66	1.00	1.88	0.12	1.00	1.64	0.36
Final Sat.:	1700	2636	764	1700	2285	1115	1700	3203	197	1700	2788	612
Capacity Analysis Module:												
Vol/Sat:	0.04	0.07	0.07	0.12	0.14	0.14	0.04	0.18	0.18	0.03	0.16	0.16
Crit Moves:		****		****				****		****		

Newport Banning Ranch
Year 2016 with Project Bluff Road Alternative - TPO Analysis
AM Peak Hour

Level Of Service Computation Report
ICU 1(Loss as Cycle Length %) Method (Future Volume Alternative)

Intersection #15 Brookhurst St/Hamilton Ave (Victoria St)

Cycle (sec):	100	Critical Vol./Cap.(X):	0.722
Loss Time (sec):	5 (Y+R=4.0 sec)	Average Delay (sec/veh):	xxxxxx
Optimal Cycle:	40	Level Of Service:	C

Street Name:	Brookhurst						Hamilton Avenue (Victoria Street)					
Approach:	North Bound			South Bound			East Bound			West Bound		
Movement:	L - T - R			L - T - R			L - T - R			L - T - R		
Control:	Protected			Protected			Prot+Permit			Prot+Permit		
Rights:	Include			Include			Include			Include		
Min. Green:	0	0	0	0	0	0	0	0	0	0	0	0
Lanes:	1 0 3 0 1			2 0 2 1 0			1 0 1 1 0			1 0 2 0 1		
Volume Module:												
Base Vol:	59	289	321	501	483	110	95	683	47	124	348	277
Growth Adj:	1.07	1.07	1.07	1.07	1.07	1.07	1.07	1.07	1.07	1.07	1.07	1.07
Initial Bse:	63	310	344	537	518	118	102	732	50	133	373	297
Added Vol:	20	38	0	0	14	0	0	0	10	0	1	0
Committed P:	0	1	0	0	3	0	0	0	0	0	0	0
Initial Fut:	83	349	344	537	535	118	102	732	60	133	374	297
User Adj:	1.00	1.00	1.00	1.00	1.00	1.00	1.00	1.00	1.00	1.00	1.00	1.00
PHF Adj:	1.00	1.00	1.00	1.00	1.00	1.00	1.00	1.00	1.00	1.00	1.00	1.00
PHF Volume:	83	349	344	537	535	118	102	732	60	133	374	297
Reduct Vol:	0	0	0	0	0	0	0	0	0	0	0	0
Reduced Vol:	83	349	344	537	535	118	102	732	60	133	374	297
PCE Adj:	1.00	1.00	1.00	1.00	1.00	1.00	1.00	1.00	1.00	1.00	1.00	1.00
MLF Adj:	1.00	1.00	1.00	1.00	1.00	1.00	1.00	1.00	1.00	1.00	1.00	1.00
FinalVolume:	83	349	344	537	535	118	102	732	60	133	374	297
Saturation Flow Module:												
Sat/Lane:	1600	1600	1600	1600	1600	1600	1600	1600	1600	1600	1600	1600
Adjustment:	1.06	1.06	1.06	1.06	1.06	1.06	1.06	1.06	1.06	1.06	1.06	1.06
Lanes:	1.00	3.00	1.00	2.00	2.46	0.54	1.00	1.85	0.15	1.00	2.00	1.00
Final Sat.:	1700	5100	1700	3400	4179	921	1700	3141	259	1700	3400	1700
Capacity Analysis Module:												
Vol/Sat:	0.05	0.07	0.20	0.16	0.13	0.13	0.06	0.23	0.23	0.08	0.11	0.17
Crit Moves:			****	****				****		****		

Newport Banning Ranch
Year 2016 with Project Bluff Road Alternative - TPO Analysis
AM Peak Hour

Level Of Service Computation Report
ICU 1(Loss as Cycle Length %) Method (Future Volume Alternative)

Intersection #16 Magnolia St/Banning Ave

Cycle (sec):	100	Critical Vol./Cap.(X):	0.264
Loss Time (sec):	5 (Y+R=4.0 sec)	Average Delay (sec/veh):	xxxxxx
Optimal Cycle:	17	Level Of Service:	A

Street Name:	Magnolia Street						Banning Avenue					
Approach:	North Bound			South Bound			East Bound			West Bound		
Movement:	L - T - R			L - T - R			L - T - R			L - T - R		
Control:	Protected			Protected			Split Phase			Split Phase		
Rights:	Include			Include			Include			Include		
Min. Green:	0	0	0	0	0	0	0	0	0	0	0	0
Lanes:	0 0 1	1 0		1 0 2	0 0		0 0 0	0 0		2 0 0	0 1	
Volume Module:												
Base Vol:	0	197	37	82	376	0	0	0	0	62	0	112
Growth Adj:	1.07	1.07	1.07	1.07	1.07	1.07	1.07	1.07	1.07	1.07	1.07	1.07
Initial Bse:	0	211	40	88	403	0	0	0	0	66	0	120
Added Vol:	0	55	0	0	18	0	0	0	0	0	0	0
Committed P:	0	7	0	0	12	0	0	0	0	0	0	0
Initial Fut:	0	273	40	88	433	0	0	0	0	66	0	120
User Adj:	1.00	1.00	1.00	1.00	1.00	1.00	1.00	1.00	1.00	1.00	1.00	1.00
PHF Adj:	1.00	1.00	1.00	1.00	1.00	1.00	1.00	1.00	1.00	1.00	1.00	1.00
PHF Volume:	0	273	40	88	433	0	0	0	0	66	0	120
Reduct Vol:	0	0	0	0	0	0	0	0	0	0	0	0
Reduced Vol:	0	273	40	88	433	0	0	0	0	66	0	120
PCE Adj:	1.00	1.00	1.00	1.00	1.00	1.00	1.00	1.00	1.00	1.00	1.00	1.00
MLF Adj:	1.00	1.00	1.00	1.00	1.00	1.00	1.00	1.00	1.00	1.00	1.00	1.00
FinalVolume:	0	273	40	88	433	0	0	0	0	66	0	120
Saturation Flow Module:												
Sat/Lane:	1600	1600	1600	1600	1600	1600	1600	1600	1600	1600	1600	1600
Adjustment:	1.06	1.06	1.06	1.06	1.06	1.06	1.06	1.06	1.06	1.06	1.06	1.06
Lanes:	0.00	1.75	0.25	1.00	2.00	0.00	0.00	0.00	0.00	2.00	0.00	1.00
Final Sat.:	0	2969	431	1700	3400	0	0	0	0	3400	0	1700
Capacity Analysis Module:												
Vol/Sat:	0.00	0.09	0.09	0.05	0.13	0.00	0.00	0.00	0.00	0.02	0.00	0.07
Crit Moves:		****		****								****

Newport Banning Ranch
Year 2016 with Project Bluff Road Alternative - TPO Analysis
AM Peak Hour

Level Of Service Computation Report
2000 HCM 4-Way Stop Method (Future Volume Alternative)

Intersection #17 Bushard St/Banning Ave

Cycle (sec):	100	Critical Vol./Cap.(X):	0.304
Loss Time (sec):	5 (Y+R=4.0 sec)	Average Delay (sec/veh):	10.2
Optimal Cycle:	0	Level Of Service:	B

Street Name:	Bushard Street						Banning Avenue					
Approach:	North Bound			South Bound			East Bound			West Bound		
Movement:	L - T - R			L - T - R			L - T - R			L - T - R		
Control:	Stop Sign			Stop Sign			Stop Sign			Stop Sign		
Rights:	Include			Include			Include			Include		
Min. Green:	0	0	0	0	0	0	0	0	0	0	0	0
Lanes:	1 0 1	1 0		1 0 1	1 0		1 0 0	1 0		1 0 0	1 0	
Volume Module:												
Base Vol:	14	86	15	16	220	121	53	84	28	7	114	19
Growth Adj:	1.07	1.07	1.07	1.07	1.07	1.07	1.07	1.07	1.07	1.07	1.07	1.07
Initial Bse:	15	92	16	17	236	130	57	90	30	8	122	20
Added Vol:	0	0	0	0	0	0	0	0	0	0	0	0
Committed P:	0	0	0	0	3	0	0	0	0	0	0	0
Initial Fut:	15	92	16	17	239	130	57	90	30	8	122	20
User Adj:	1.00	1.00	1.00	1.00	1.00	1.00	1.00	1.00	1.00	1.00	1.00	1.00
PHF Adj:	1.00	1.00	1.00	1.00	1.00	1.00	1.00	1.00	1.00	1.00	1.00	1.00
PHF Volume:	15	92	16	17	239	130	57	90	30	8	122	20
Reduct Vol:	0	0	0	0	0	0	0	0	0	0	0	0
Reduced Vol:	15	92	16	17	239	130	57	90	30	8	122	20
PCE Adj:	1.00	1.00	1.00	1.00	1.00	1.00	1.00	1.00	1.00	1.00	1.00	1.00
MLF Adj:	1.00	1.00	1.00	1.00	1.00	1.00	1.00	1.00	1.00	1.00	1.00	1.00
FinalVolume:	15	92	16	17	239	130	57	90	30	8	122	20
Saturation Flow Module:												
Adjustment:	1.00	1.00	1.00	1.00	1.00	1.00	1.00	1.00	1.00	1.00	1.00	1.00
Lanes:	1.00	1.70	0.30	1.00	1.30	0.70	1.00	0.75	0.25	1.00	0.86	0.14
Final Sat.:	494	917	163	545	785	454	524	437	146	519	490	82
Capacity Analysis Module:												
Vol/Sat:	0.03	0.10	0.10	0.03	0.30	0.29	0.11	0.21	0.21	0.01	0.25	0.25
Crit Moves:		****			****			****			****	
Delay/Veh:	9.7	9.6	9.5	9.2	10.8	10.1	10.0	9.9	9.9	9.3	10.5	10.5
Delay Adj:	1.00	1.00	1.00	1.00	1.00	1.00	1.00	1.00	1.00	1.00	1.00	1.00
AdjDel/Veh:	9.7	9.6	9.5	9.2	10.8	10.1	10.0	9.9	9.9	9.3	10.5	10.5
LOS by Move:	A	A	A	A	B	B	A	A	A	A	B	B
ApproachDel:		9.6			10.5			9.9			10.4	
Delay Adj:		1.00			1.00			1.00			1.00	
ApprAdjDel:		9.6			10.5			9.9			10.4	
LOS by Appr:		A			B			A			B	
AllWayAvgQ:	0.0	0.1	0.1	0.0	0.4	0.4	0.1	0.2	0.2	0.0	0.3	0.3

Newport Banning Ranch
Year 2016 with Project Bluff Road Alternative - TPO Analysis
AM Peak Hour

Note: Queue reported is the number of cars per lane.

Newport Banning Ranch
Year 2016 with Project Bluff Road Alternative - TPO Analysis
AM Peak Hour

Level Of Service Computation Report
ICU 1(Loss as Cycle Length %) Method (Future Volume Alternative)

Intersection #18 Brookhurst St/Banning Ave

Cycle (sec):	100	Critical Vol./Cap.(X):	0.274
Loss Time (sec):	5 (Y+R=4.0 sec)	Average Delay (sec/veh):	xxxxxx
Optimal Cycle:	17	Level Of Service:	A

Street Name:	Brookhurst Street						Banning Avenue					
Approach:	North Bound			South Bound			East Bound			West Bound		
Movement:	L - T - R			L - T - R			L - T - R			L - T - R		
Control:	Protected			Protected			Split Phase			Split Phase		
Rights:	Include			Include			Include			Include		
Min. Green:	0	0	0	0	0	0	0	0	0	0	0	0
Lanes:	1 0 3 0 0			0 0 2 1 0			1 0 0 0 1			0 0 0 0 0		
Volume Module:												
Base Vol:	7	477	0	0	535	102	126	0	14	0	0	0
Growth Adj:	1.07	1.07	1.07	1.07	1.07	1.07	1.07	1.07	1.07	1.07	1.07	1.07
Initial Bse:	8	511	0	0	574	109	135	0	15	0	0	0
Added Vol:	0	58	0	0	24	0	0	0	0	0	0	0
Committed P:	0	3	0	0	6	0	0	0	0	0	0	0
Initial Fut:	8	572	0	0	604	109	135	0	15	0	0	0
User Adj:	1.00	1.00	1.00	1.00	1.00	1.00	1.00	1.00	1.00	1.00	1.00	1.00
PHF Adj:	1.00	1.00	1.00	1.00	1.00	1.00	1.00	1.00	1.00	1.00	1.00	1.00
PHF Volume:	8	572	0	0	604	109	135	0	15	0	0	0
Reduct Vol:	0	0	0	0	0	0	0	0	0	0	0	0
Reduced Vol:	8	572	0	0	604	109	135	0	15	0	0	0
PCE Adj:	1.00	1.00	1.00	1.00	1.00	1.00	1.00	1.00	1.00	1.00	1.00	1.00
MLF Adj:	1.00	1.00	1.00	1.00	1.00	1.00	1.00	1.00	1.00	1.00	1.00	1.00
FinalVolume:	8	572	0	0	604	109	135	0	15	0	0	0
Saturation Flow Module:												
Sat/Lane:	1600	1600	1600	1600	1600	1600	1600	1600	1600	1600	1600	1600
Adjustment:	1.06	1.06	1.06	1.06	1.06	1.06	1.06	1.06	1.06	1.06	1.06	1.06
Lanes:	1.00	3.00	0.00	0.00	2.54	0.46	1.00	0.00	1.00	0.00	0.00	0.00
Final Sat.:	1700	5100	0	0	4318	782	1700	0	1700	0	0	0
Capacity Analysis Module:												
Vol/Sat:	0.00	0.11	0.00	0.00	0.14	0.14	0.08	0.00	0.01	0.00	0.00	0.00
Crit Moves:	****				****		****					

Newport Banning Ranch
Year 2016 with Project Bluff Road Alternative - TPO Analysis
AM Peak Hour

Level Of Service Computation Report
ICU 1(Loss as Cycle Length %) Method (Future Volume Alternative)

Intersection #19 Magnolia St/PCH

Cycle (sec):	120	Critical Vol./Cap.(X):	0.523
Loss Time (sec):	6 (Y+R=4.0 sec)	Average Delay (sec/veh):	xxxxxx
Optimal Cycle:	27	Level Of Service:	A

Street Name:	Magnolia Street						Pacific Coast Highway					
Approach:	North Bound			South Bound			East Bound			West Bound		
Movement:	L - T - R			L - T - R			L - T - R			L - T - R		
Control:	Split Phase			Split Phase			Protected			Protected		
Rights:	Include			Include			Include			Include		
Min. Green:	0	0	0	0	0	0	0	0	0	0	0	0
Lanes:	1 0 0 1 0			1 1 0 0 1			1 0 3 0 1			1 0 3 0 1		
Volume Module:												
Base Vol:	3	24	7	232	41	137	116	1607	17	18	614	50
Growth Adj:	1.07	1.07	1.07	1.07	1.07	1.07	1.07	1.07	1.07	1.07	1.07	1.07
Initial Bse:	3	26	8	249	44	147	124	1723	18	19	658	54
Added Vol:	0	0	0	18	0	0	0	14	0	0	38	55
Committed P:	0	0	0	12	0	0	0	35	0	0	21	7
Initial Fut:	3	26	8	279	44	147	124	1772	18	19	717	116
User Adj:	1.00	1.00	1.00	1.00	1.00	1.00	1.00	1.00	1.00	1.00	1.00	1.00
PHF Adj:	1.00	1.00	1.00	1.00	1.00	1.00	1.00	1.00	1.00	1.00	1.00	1.00
PHF Volume:	3	26	8	279	44	147	124	1772	18	19	717	116
Reduct Vol:	0	0	0	0	0	0	0	0	0	0	0	0
Reduced Vol:	3	26	8	279	44	147	124	1772	18	19	717	116
PCE Adj:	1.00	1.00	1.00	1.00	1.00	1.00	1.00	1.00	1.00	1.00	1.00	1.00
MLF Adj:	1.00	1.00	1.00	1.00	1.00	1.00	1.00	1.00	1.00	1.00	1.00	1.00
FinalVolume:	3	26	8	279	44	147	124	1772	18	19	717	116
Saturation Flow Module:												
Sat/Lane:	1600	1600	1600	1600	1600	1600	1600	1600	1600	1600	1600	1600
Adjustment:	1.06	1.06	1.06	1.06	1.06	1.06	1.06	1.06	1.06	1.06	1.06	1.06
Lanes:	1.00	0.77	0.23	1.73	0.27	1.00	1.00	3.00	1.00	1.00	3.00	1.00
Final Sat.:	1700	1316	384	2937	463	1700	1700	5100	1700	1700	5100	1700
Capacity Analysis Module:												
Vol/Sat:	0.00	0.02	0.02	0.09	0.09	0.09	0.07	0.35	0.01	0.01	0.14	0.07
Crit Moves:		****		****				****		****		

Newport Banning Ranch
Year 2016 with Project Bluff Road Alternative - TPO Analysis
AM Peak Hour

Level Of Service Computation Report
ICU 1(Loss as Cycle Length %) Method (Future Volume Alternative)

Intersection #20 Brookhurst St/Bushard St

Cycle (sec):	100	Critical Vol./Cap.(X):	0.346
Loss Time (sec):	5 (Y+R=4.0 sec)	Average Delay (sec/veh):	xxxxxx
Optimal Cycle:	18	Level Of Service:	A

Street Name:	Brookhurst Street						Bushard Street					
Approach:	North Bound			South Bound			East Bound			West Bound		
Movement:	L - T - R			L - T - R			L - T - R			L - T - R		
Control:	Protected			Protected			Permitted			Permitted		
Rights:	Include			Include			Include			Include		
Min. Green:	0	0	0	0	0	0	0	0	0	0	0	0
Lanes:	1 0 2	1 0		1 0 3	0 1		1 0 0	0 1		0 0 0	1 0	
Volume Module:												
Base Vol:	79	427	2	2	487	10	8	0	210	0	1	4
Growth Adj:	1.07	1.07	1.07	1.07	1.07	1.07	1.07	1.07	1.07	1.07	1.07	1.07
Initial Bse:	85	458	2	2	522	11	9	0	225	0	1	4
Added Vol:	0	58	0	0	24	0	0	0	0	0	0	0
Committed P:	3	6	0	0	9	0	0	0	6	0	0	0
Initial Fut:	88	522	2	2	555	11	9	0	231	0	1	4
User Adj:	1.00	1.00	1.00	1.00	1.00	1.00	1.00	1.00	1.00	1.00	1.00	1.00
PHF Adj:	1.00	1.00	1.00	1.00	1.00	1.00	1.00	1.00	1.00	1.00	1.00	1.00
PHF Volume:	88	522	2	2	555	11	9	0	231	0	1	4
Reduct Vol:	0	0	0	0	0	0	0	0	0	0	0	0
Reduced Vol:	88	522	2	2	555	11	9	0	231	0	1	4
PCE Adj:	1.00	1.00	1.00	1.00	1.00	1.00	1.00	1.00	1.00	1.00	1.00	1.00
MLF Adj:	1.00	1.00	1.00	1.00	1.00	1.00	1.00	1.00	1.00	1.00	1.00	1.00
FinalVolume:	88	522	2	2	555	11	9	0	231	0	1	4
Saturation Flow Module:												
Sat/Lane:	1600	1600	1600	1600	1600	1600	1600	1600	1600	1600	1600	1600
Adjustment:	1.06	1.06	1.06	1.06	1.06	1.06	1.06	1.06	1.06	1.06	1.06	1.06
Lanes:	1.00	2.99	0.01	1.00	3.00	1.00	1.00	0.00	1.00	0.00	0.20	0.80
Final Sat.:	1700	5079	21	1700	5100	1700	1700	0	1700	0	340	1360
Capacity Analysis Module:												
Vol/Sat:	0.05	0.10	0.10	0.00	0.11	0.01	0.01	0.00	0.14	0.00	0.00	0.00
Crit Moves:	****				****				****	****		

Newport Banning Ranch
Year 2016 with Project Bluff Road Alternative - TPO Analysis
AM Peak Hour

Level Of Service Computation Report
ICU 1(Loss as Cycle Length %) Method (Future Volume Alternative)

Intersection #21 Brookhurst St/PCH

Cycle (sec):	120	Critical Vol./Cap.(X):	0.624
Loss Time (sec):	6 (Y+R=4.0 sec)	Average Delay (sec/veh):	xxxxxx
Optimal Cycle:	34	Level Of Service:	B

Street Name:	Brookhurst Street						Pacific Coast HIghway					
Approach:	North Bound			South Bound			East Bound			West Bound		
Movement:	L - T - R			L - T - R			L - T - R			L - T - R		
Control:	Split Phase			Split Phase			Protected			Protected		
Rights:	Include			Include			Include			Ovl		
Min. Green:	0	0	0	0	0	0	0	0	0	0	0	0
Lanes:	1 0 0 1 0			2 0 1 0 1			1 0 3 0 1			1 0 3 0 1		
Volume Module:												
Base Vol:	4	19	12	513	6	117	166	1721	2	6	639	305
Growth Adj:	1.07	1.07	1.07	1.07	1.07	1.07	1.07	1.07	1.07	1.07	1.07	1.07
Initial Bse:	4	20	13	550	6	125	178	1845	2	6	685	327
Added Vol:	0	0	0	24	0	0	0	32	0	0	94	58
Committed P:	0	0	0	15	0	0	0	47	0	0	28	9
Initial Fut:	4	20	13	589	6	125	178	1924	2	6	807	394
User Adj:	1.00	1.00	1.00	1.00	1.00	1.00	1.00	1.00	1.00	1.00	1.00	1.00
PHF Adj:	1.00	1.00	1.00	1.00	1.00	1.00	1.00	1.00	1.00	1.00	1.00	1.00
PHF Volume:	4	20	13	589	6	125	178	1924	2	6	807	394
Reduct Vol:	0	0	0	0	0	0	0	0	0	0	0	0
Reduced Vol:	4	20	13	589	6	125	178	1924	2	6	807	394
PCE Adj:	1.00	1.00	1.00	1.00	1.00	1.00	1.00	1.00	1.00	1.00	1.00	1.00
MLF Adj:	1.00	1.00	1.00	1.00	1.00	1.00	1.00	1.00	1.00	1.00	1.00	1.00
FinalVolume:	4	20	13	589	6	125	178	1924	2	6	807	394
OvlAdjVol:												99
Saturation Flow Module:												
Sat/Lane:	1600	1600	1600	1600	1600	1600	1600	1600	1600	1600	1600	1600
Adjustment:	1.06	1.06	1.06	1.06	1.06	1.06	1.06	1.06	1.06	1.06	1.06	1.06
Lanes:	1.00	0.61	0.39	2.00	1.00	1.00	1.00	3.00	1.00	1.00	3.00	1.00
Final Sat.:	1700	1042	658	3400	1700	1700	1700	5100	1700	1700	5100	1700
Capacity Analysis Module:												
Vol/Sat:	0.00	0.02	0.02	0.17	0.00	0.07	0.10	0.38	0.00	0.00	0.16	0.23
OvlAdjV/S:												0.06
Crit Moves:		****		****				****		****		

Newport Banning Ranch
Year 2016 with Project Bluff Road Alternative - TPO Analysis
AM Peak Hour

Level Of Service Computation Report
ICU 1(Loss as Cycle Length %) Method (Future Volume Alternative)

Intersection #22 Placentia Ave/Victoria St

Cycle (sec):	100	Critical Vol./Cap.(X):	0.802
Loss Time (sec):	0 (Y+R=4.0 sec)	Average Delay (sec/veh):	xxxxxx
Optimal Cycle:	115	Level Of Service:	D

Street Name:	Placentia Avenue						Victoria Street					
Approach:	North Bound			South Bound			East Bound			West Bound		
Movement:	L - T - R			L - T - R			L - T - R			L - T - R		
Control:	Protected			Protected			Protected			Protected		
Rights:	Include			Include			Ovl			Include		
Min. Green:	0	0	0	0	0	0	0	0	0	0	0	0
Lanes:	2 0 2	0 1		1 0 2	0 1		1 0 2	0 1		1 0 2	0 1	
Volume Module:												
Base Vol:	271	404	169	122	559	45	80	1192	464	179	493	101
Growth Adj:	1.07	1.07	1.07	1.07	1.07	1.07	1.07	1.07	1.07	1.07	1.07	1.07
Initial Bse:	291	433	181	131	599	48	86	1278	497	192	528	108
Added Vol:	1	38	0	0	14	0	0	0	0	0	0	0
Committed P:	0	0	0	0	0	0	0	0	0	0	0	0
Initial Fut:	292	471	181	131	613	48	86	1278	497	192	528	108
User Adj:	1.00	1.00	1.00	1.00	1.00	1.00	1.00	1.00	1.00	1.00	1.00	1.00
PHF Adj:	1.00	1.00	1.00	1.00	1.00	1.00	1.00	1.00	1.00	1.00	1.00	1.00
PHF Volume:	292	471	181	131	613	48	86	1278	497	192	528	108
Reduct Vol:	0	0	0	0	0	0	0	0	0	0	0	0
Reduced Vol:	292	471	181	131	613	48	86	1278	497	192	528	108
PCE Adj:	1.00	1.00	1.00	1.00	1.00	1.00	1.00	1.00	1.00	1.00	1.00	1.00
MLF Adj:	1.00	1.00	1.00	1.00	1.00	1.00	1.00	1.00	1.00	1.00	1.00	1.00
FinalVolume:	292	471	181	131	613	48	86	1278	497	192	528	108
OvlAdjVol:									352			
Saturation Flow Module:												
Sat/Lane:	1600	1600	1600	1600	1600	1600	1600	1600	1600	1600	1600	1600
Adjustment:	1.00	1.00	1.00	1.00	1.00	1.00	1.00	1.00	1.00	1.00	1.00	1.00
Lanes:	2.00	2.00	1.00	1.00	2.00	1.00	1.00	2.00	1.00	1.00	2.00	1.00
Final Sat.:	3200	3200	1600	1600	3200	1600	1600	3200	1600	1600	3200	1600
Capacity Analysis Module:												
Vol/Sat:	0.09	0.15	0.11	0.08	0.19	0.03	0.05	0.40	0.31	0.12	0.17	0.07
OvlAdjV/S:									0.22			
Crit Moves:	****				****			****		****		

Newport Banning Ranch
Year 2016 with Project Bluff Road Alternative - TPO Analysis
AM Peak Hour

Level Of Service Computation Report
ICU 1(Loss as Cycle Length %) Method (Future Volume Alternative)

Intersection #23 Pomona Ave/Victoria St

Cycle (sec):	100	Critical Vol./Cap.(X):	0.673
Loss Time (sec):	0 (Y+R=4.0 sec)	Average Delay (sec/veh):	xxxxxx
Optimal Cycle:	44	Level Of Service:	B

Street Name:	Pomona Avenue						Victoria Street					
Approach:	North Bound			South Bound			East Bound			West Bound		
Movement:	L - T - R			L - T - R			L - T - R			L - T - R		
Control:	Permitted			Permitted			Permitted			Permitted		
Rights:	Include			Include			Include			Include		
Min. Green:	0	0	0	0	0	0	0	0	0	0	0	0
Lanes:	1 0 0 1 0			1 0 0 1 0			1 0 2 0 1			1 0 2 0 1		
Volume Module:												
Base Vol:	32	89	77	10	110	14	15	1486	52	86	690	18
Growth Adj:	1.07	1.07	1.07	1.07	1.07	1.07	1.07	1.07	1.07	1.07	1.07	1.07
Initial Bse:	34	95	83	11	118	15	16	1593	56	92	740	19
Added Vol:	0	0	0	0	0	0	0	0	0	0	0	0
Committed P:	0	0	0	0	0	0	0	0	0	0	0	0
Initial Fut:	34	95	83	11	118	15	16	1593	56	92	740	19
User Adj:	1.00	1.00	1.00	1.00	1.00	1.00	1.00	1.00	1.00	1.00	1.00	1.00
PHF Adj:	1.00	1.00	1.00	1.00	1.00	1.00	1.00	1.00	1.00	1.00	1.00	1.00
PHF Volume:	34	95	83	11	118	15	16	1593	56	92	740	19
Reduct Vol:	0	0	0	0	0	0	0	0	0	0	0	0
Reduced Vol:	34	95	83	11	118	15	16	1593	56	92	740	19
PCE Adj:	1.00	1.00	1.00	1.00	1.00	1.00	1.00	1.00	1.00	1.00	1.00	1.00
MLF Adj:	1.00	1.00	1.00	1.00	1.00	1.00	1.00	1.00	1.00	1.00	1.00	1.00
FinalVolume:	34	95	83	11	118	15	16	1593	56	92	740	19
Saturation Flow Module:												
Sat/Lane:	1600	1600	1600	1600	1600	1600	1600	1600	1600	1600	1600	1600
Adjustment:	1.00	1.00	1.00	1.00	1.00	1.00	1.00	1.00	1.00	1.00	1.00	1.00
Lanes:	1.00	0.54	0.46	1.00	0.89	0.11	1.00	2.00	1.00	1.00	2.00	1.00
Final Sat.:	1600	858	742	1600	1419	181	1600	3200	1600	1600	3200	1600
Capacity Analysis Module:												
Vol/Sat:	0.02	0.11	0.11	0.01	0.08	0.08	0.01	0.50	0.03	0.06	0.23	0.01
Crit Moves:		****		****				****		****		

Newport Banning Ranch
Year 2016 with Project Bluff Road Alternative - TPO Analysis
AM Peak Hour

Level Of Service Computation Report
ICU 1(Loss as Cycle Length %) Method (Future Volume Alternative)

Intersection #24 Harbor Blvd/Victoria St

Cycle (sec):	100	Critical Vol./Cap.(X):	0.756
Loss Time (sec):	0 (Y+R=4.0 sec)	Average Delay (sec/veh):	xxxxxx
Optimal Cycle:	93	Level Of Service:	C

Street Name:	Harbor Boulevard									Victoria Street								
Approach:	North Bound					South Bound				East Bound					West Bound			
Movement:	L	-	T	-	R	L	-	T	-	R	L	-	T	-	R	L	-	T	-	R
Control:	Protected					Protected					Protected					Protected				
Rights:	Include					Ovl					Include					Include				
Min. Green:	0	0		0		0	0		0		0	0		0		0	0		0	
Lanes:	1	0	3	0	1	1	0	3	0	1	2	0	1	1	0	2	0	2	0	1
Volume Module:																				
Base Vol:	60	615		90		119	933		166		248	1272		89		135	623		109	
Growth Adj:	1.07	1.07		1.07		1.07	1.07		1.07		1.07	1.07		1.07		1.07	1.07		1.07	
Initial Bse:	64	659		96		128	1000		178		266	1364		95		145	668		117	
Added Vol:	0	77		0		0	29		0		0	0		0		0	0		0	
Committed P:	0	0		0		0	0		0		0	0		0		0	0		0	
Initial Fut:	64	736		96		128	1029		178		266	1364		95		145	668		117	
User Adj:	1.00	1.00		1.00		1.00	1.00		1.00		1.00	1.00		1.00		1.00	1.00		1.00	
PHF Adj:	1.00	1.00		1.00		1.00	1.00		1.00		1.00	1.00		1.00		1.00	1.00		1.00	
PHF Volume:	64	736		96		128	1029		178		266	1364		95		145	668		117	
Reduct Vol:	0	0		0		0	0		0		0	0		0		0	0		0	
Reduced Vol:	64	736		96		128	1029		178		266	1364		95		145	668		117	
PCE Adj:	1.00	1.00		1.00		1.00	1.00		1.00		1.00	1.00		1.00		1.00	1.00		1.00	
MLF Adj:	1.00	1.00		1.00		1.00	1.00		1.00		1.00	1.00		1.00		1.00	1.00		1.00	
FinalVolume:	64	736		96		128	1029		178		266	1364		95		145	668		117	
OvlAdjVol:									45											
Saturation Flow Module:																				
Sat/Lane:	1600	1600		1600		1600	1600		1600		1600	1600		1600		1600	1600		1600	
Adjustment:	1.00	1.00		1.00		1.00	1.00		1.00		1.00	1.00		1.00		1.00	1.00		1.00	
Lanes:	1.00	3.00		1.00		1.00	3.00		1.00		2.00	1.87		0.13		2.00	2.00		1.00	
Final Sat.:	1600	4800		1600		1600	4800		1600		3200	2991		209		3200	3200		1600	
Capacity Analysis Module:																				
Vol/Sat:	0.04	0.15		0.06		0.08	0.21		0.11		0.08	0.46		0.46		0.05	0.21		0.07	
OvlAdjV/S:									0.03											
Crit Moves:	****						****					****				****				

Newport Banning Ranch
Year 2016 with Project Bluff Road Alternative - TPO Analysis
AM Peak Hour

Level Of Service Computation Report
ICU 1(Loss as Cycle Length %) Method (Future Volume Alternative)

Intersection #25 Newport Blvd/Victoria St [Ramp]

Cycle (sec):	120	Critical Vol./Cap.(X):	0.591
Loss Time (sec):	0 (Y+R=4.0 sec)	Average Delay (sec/veh):	xxxxxx
Optimal Cycle:	46	Level Of Service:	A

Street Name:	Newport Boulevard									Victoria Street								
Approach:	North Bound					South Bound				East Bound					West Bound			
Movement:	L	-	T	-	R	L	-	T	- R	L	-	T	-	R	L	-	T	- R
Control:	Permitted					Permitted				Protected					Protected			
Rights:	Include					Ignore				Include					Include			
Min. Green:	0	0	0	0	0	0	0	0		0	0	0	0		0	0	0	
Lanes:	0	0	0	0	0	1	1	2	0 1	0	0	2	1	0	1	0	1	0 0
Volume Module:																		
Base Vol:	0	0	0	304	706	749	0	1629	30	77	279	0						
Growth Adj:	1.07	1.07	1.07	1.07	1.07	1.07	1.07	1.07	1.07	1.07	1.07	1.07						
Initial Bse:	0	0	0	326	757	803	0	1746	32	83	299	0						
Added Vol:	0	0	0	0	0	0	0	0	0	0	0	0						
Committed P:	0	0	0	0	0	0	0	0	0	0	0	0						
Initial Fut:	0	0	0	326	757	803	0	1746	32	83	299	0						
User Adj:	1.00	1.00	1.00	1.00	1.00	0.00	1.00	1.00	1.00	1.00	1.00	1.00						
PHF Adj:	1.00	1.00	1.00	1.00	1.00	0.00	1.00	1.00	1.00	1.00	1.00	1.00						
PHF Volume:	0	0	0	326	757	0	0	1746	32	83	299	0						
Reduct Vol:	0	0	0	0	0	0	0	0	0	0	0	0						
Reduced Vol:	0	0	0	326	757	0	0	1746	32	83	299	0						
PCE Adj:	1.00	1.00	1.00	1.00	1.00	0.00	1.00	1.00	1.00	1.00	1.00	1.00						
MLF Adj:	1.00	1.00	1.00	1.00	1.00	0.00	1.00	1.00	1.00	1.00	1.00	1.00						
FinalVolume:	0	0	0	326	757	0	0	1746	32	83	299	0						
Saturation Flow Module:																		
Sat/Lane:	1600	1600	1600	1600	1600	1600	1600	1600	1600	1600	1600	1600						
Adjustment:	1.00	1.00	1.00	1.00	1.00	1.00	1.00	1.00	1.00	1.00	1.00	1.00						
Lanes:	0.00	0.00	0.00	1.20	2.80	1.00	0.00	2.95	0.05	1.00	1.00	0.00						
Final Sat.:	0	0	0	1926	4474	1600	0	4713	87	1600	1600	0						
Capacity Analysis Module:																		
Vol/Sat:	0.00	0.00	0.00	0.17	0.17	0.00	0.00	0.37	0.37	0.05	0.19	0.00						
Crit Moves:				****				****		****								

Newport Banning Ranch
Year 2016 with Project Bluff Road Alternative - TPO Analysis
AM Peak Hour

Level Of Service Computation Report
ICU 1(Loss as Cycle Length %) Method (Future Volume Alternative)

Intersection #26 Newport Blvd /Victoria St (22nd St) [Ramp]

Cycle (sec):	120	Critical Vol./Cap.(X):	1.033
Loss Time (sec):	0 (Y+R=4.0 sec)	Average Delay (sec/veh):	xxxxxx
Optimal Cycle:	180	Level Of Service:	F

Street Name:	Newport Boulevard						Victoria Street (22nd Street)					
Approach:	North Bound			South Bound			East Bound			West Bound		
Movement:	L - T - R			L - T - R			L - T - R			L - T - R		
Control:	Permitted			Permitted			Protected			Protected		
Rights:	Include			Include			Include			Include		
Min. Green:	0	0	0	0	0	0	0	0	0	0	0	0
Lanes:	0 1	2 0	1	0 0	0 0	0	2 0	2 0	0	0 0	1 0	1
Volume Module:												
Base Vol:	87	1212	32	0	0	0	1587	316	0	0	266	316
Growth Adj:	1.07	1.07	1.07	1.07	1.07	1.07	1.07	1.07	1.07	1.07	1.07	1.07
Initial Bse:	93	1299	34	0	0	0	1701	339	0	0	285	339
Added Vol:	0	0	0	0	0	0	0	0	0	0	0	0
Committed P:	0	0	0	0	0	0	0	0	0	0	0	0
Initial Fut:	93	1299	34	0	0	0	1701	339	0	0	285	339
User Adj:	1.00	1.00	1.00	1.00	1.00	1.00	1.00	1.00	1.00	1.00	1.00	1.00
PHF Adj:	1.00	1.00	1.00	1.00	1.00	1.00	1.00	1.00	1.00	1.00	1.00	1.00
PHF Volume:	93	1299	34	0	0	0	1701	339	0	0	285	339
Reduct Vol:	0	0	0	0	0	0	0	0	0	0	0	0
Reduced Vol:	93	1299	34	0	0	0	1701	339	0	0	285	339
PCE Adj:	1.00	1.00	1.00	1.00	1.00	1.00	1.00	1.00	1.00	1.00	1.00	1.00
MLF Adj:	1.00	1.00	1.00	1.00	1.00	1.00	1.00	1.00	1.00	1.00	1.00	1.00
FinalVolume:	93	1299	34	0	0	0	1701	339	0	0	285	339
Saturation Flow Module:												
Sat/Lane:	1600	1600	1600	1600	1600	1600	1600	1600	1600	1600	1600	1600
Adjustment:	1.00	1.00	1.00	1.00	1.00	1.00	1.00	1.00	1.00	1.00	1.00	1.00
Lanes:	0.20	2.80	1.00	0.00	0.00	0.00	2.00	2.00	0.00	0.00	1.00	1.00
Final Sat.:	321	4479	1600	0	0	0	3200	3200	0	0	1600	1600
Capacity Analysis Module:												
Vol/Sat:	0.06	0.29	0.02	0.00	0.00	0.00	0.53	0.11	0.00	0.00	0.18	0.21
Crit Moves:		****					****					****

Newport Banning Ranch
Year 2016 with Project Bluff Road Alternative - TPO Analysis
AM Peak Hour

Level Of Service Computation Report
2000 HCM 4-Way Stop Method (Future Volume Alternative)

Intersection #27 Whittier Ave/19th St

Cycle (sec):	100	Critical Vol./Cap.(X):	0.378
Loss Time (sec):	0 (Y+R=4.0 sec)	Average Delay (sec/veh):	10.3
Optimal Cycle:	0	Level Of Service:	B

Street Name:	Whittier Avenue						19th St					
Approach:	North Bound			South Bound			East Bound			West Bound		
Movement:	L -	T -	R	L -	T -	R	L -	T -	R	L -	T -	R
Control:	Stop Sign			Stop Sign			Stop Sign			Stop Sign		
Rights:	Include			Include			Include			Include		
Min. Green:	0	0	0	0	0	0	0	0	0	0	0	0
Lanes:	0 0	1! 0	0	0 1	0 0	0	1 0	0 1	0	1 0	0 1	0
Volume Module:												
Base Vol:	5	6	258	10	6	0	1	123	7	210	29	10
Growth Adj:	1.07	1.07	1.07	1.07	1.07	1.07	1.07	1.07	1.07	1.07	1.07	1.07
Initial Bse:	5	6	277	11	6	0	1	132	8	225	31	11
Added Vol:	0	0	0	0	0	0	0	0	0	0	0	0
Committed P:	0	0	0	0	0	0	0	0	0	0	0	0
Initial Fut:	5	6	277	11	6	0	1	132	8	225	31	11
User Adj:	1.00	1.00	1.00	1.00	1.00	1.00	1.00	1.00	1.00	1.00	1.00	1.00
PHF Adj:	1.00	1.00	1.00	1.00	1.00	1.00	1.00	1.00	1.00	1.00	1.00	1.00
PHF Volume:	5	6	277	11	6	0	1	132	8	225	31	11
Reduct Vol:	0	0	0	0	0	0	0	0	0	0	0	0
Reduced Vol:	5	6	277	11	6	0	1	132	8	225	31	11
PCE Adj:	1.00	1.00	1.00	1.00	1.00	1.00	1.00	1.00	1.00	1.00	1.00	1.00
MLF Adj:	1.00	1.00	1.00	1.00	1.00	1.00	1.00	1.00	1.00	1.00	1.00	1.00
FinalVolume:	5	6	277	11	6	0	1	132	8	225	31	11
Saturation Flow Module:												
Adjustment:	1.00	1.00	1.00	1.00	1.00	1.00	1.00	1.00	1.00	1.00	1.00	1.00
Lanes:	0.02	0.02	0.96	0.62	0.38	0.00	1.00	0.95	0.05	1.00	0.74	0.26
Final Sat.:	14	17	740	376	225	0	572	593	34	595	497	172
Capacity Analysis Module:												
Vol/Sat:	0.37	0.37	0.37	0.03	0.03	xxxx	0.00	0.22	0.22	0.38	0.06	0.06
Crit Moves:	****				****			****		****		
Delay/Veh:	9.9	9.9	9.9	8.6	8.6	0.0	8.7	9.6	9.6	11.9	8.2	8.2
Delay Adj:	1.00	1.00	1.00	1.00	1.00	1.00	1.00	1.00	1.00	1.00	1.00	1.00
AdjDel/Veh:	9.9	9.9	9.9	8.6	8.6	0.0	8.7	9.6	9.6	11.9	8.2	8.2
LOS by Move:	A	A	A	A	A	*	A	A	A	B	A	A
ApproachDel:	9.9			8.6			9.6			11.3		
Delay Adj:	1.00			1.00			1.00			1.00		
ApprAdjDel:	9.9			8.6			9.6			11.3		
LOS by Appr:	A			A			A			B		
AllWayAvgQ:	0.5	0.5	0.5	0.0	0.0	0.0	0.0	0.3	0.3	0.6	0.1	0.1

Newport Banning Ranch
Year 2016 with Project Bluff Road Alternative - TPO Analysis
AM Peak Hour

Note: Queue reported is the number of cars per lane.
****

Newport Banning Ranch
Year 2016 with Project Bluff Road Alternative - TPO Analysis
AM Peak Hour

Level Of Service Computation Report
2000 HCM 4-Way Stop Method (Future Volume Alternative)

Intersection #28 Monrovia Ave/19th St

Cycle (sec):	100	Critical Vol./Cap.(X):	0.823
Loss Time (sec):	0 (Y+R=4.0 sec)	Average Delay (sec/veh):	19.9
Optimal Cycle:	0	Level Of Service:	C

Street Name:	Monrovia Avenue						19th Street					
Approach:	North Bound			South Bound			East Bound			West Bound		
Movement:	L -	T -	R	L -	T -	R	L -	T -	R	L -	T -	R
Control:	Stop Sign			Stop Sign			Stop Sign			Stop Sign		
Rights:	Include			Include			Include			Include		
Min. Green:	0	0	0	0	0	0	0	0	0	0	0	0
Lanes:	0 1	0 0	1	0 0	1!	0 0	1 0	1 0	1	1 0	1 0	1
Volume Module:												
Base Vol:	31	10	162	79	19	1	4	403	34	154	213	30
Growth Adj:	1.07	1.07	1.07	1.07	1.07	1.07	1.07	1.07	1.07	1.07	1.07	1.07
Initial Bse:	33	11	174	85	20	1	4	432	36	165	228	32
Added Vol:	0	0	0	0	0	0	0	0	0	0	0	0
Committed P:	0	0	0	0	0	0	0	0	0	0	0	0
Initial Fut:	33	11	174	85	20	1	4	432	36	165	228	32
User Adj:	1.00	1.00	1.00	1.00	1.00	1.00	1.00	1.00	1.00	1.00	1.00	1.00
PHF Adj:	1.00	1.00	1.00	1.00	1.00	1.00	1.00	1.00	1.00	1.00	1.00	1.00
PHF Volume:	33	11	174	85	20	1	4	432	36	165	228	32
Reduct Vol:	0	0	0	0	0	0	0	0	0	0	0	0
Reduced Vol:	33	11	174	85	20	1	4	432	36	165	228	32
PCE Adj:	1.00	1.00	1.00	1.00	1.00	1.00	1.00	1.00	1.00	1.00	1.00	1.00
MLF Adj:	1.00	1.00	1.00	1.00	1.00	1.00	1.00	1.00	1.00	1.00	1.00	1.00
FinalVolume:	33	11	174	85	20	1	4	432	36	165	228	32
Saturation Flow Module:												
Adjustment:	1.00	1.00	1.00	1.00	1.00	1.00	1.00	1.00	1.00	1.00	1.00	1.00
Lanes:	0.76	0.24	1.00	0.80	0.19	0.01	1.00	1.00	1.00	1.00	1.00	1.00
Final Sat.:	337	109	517	348	84	4	480	525	573	468	502	549
Capacity Analysis Module:												
Vol/Sat:	0.10	0.10	0.34	0.24	0.24	0.24	0.01	0.82	0.06	0.35	0.46	0.06
Crit Moves:			****			****		****			****	
Delay/Veh:	11.1	11.1	12.1	12.8	12.8	12.8	10.0	32.4	9.2	13.9	14.9	9.3
Delay Adj:	1.00	1.00	1.00	1.00	1.00	1.00	1.00	1.00	1.00	1.00	1.00	1.00
AdjDel/Veh:	11.1	11.1	12.1	12.8	12.8	12.8	10.0	32.4	9.2	13.9	14.9	9.3
LOS by Move:	B	B	B	B	B	B	B	D	A	B	B	A
ApproachDel:	11.9			12.8			30.4			14.1		
Delay Adj:	1.00			1.00			1.00			1.00		
ApprAdjDel:	11.9			12.8			30.4			14.1		
LOS by Appr:	B			B			D			B		
AllWayAvgQ:	0.1	0.1	0.4	0.3	0.3	0.3	0.0	3.4	0.1	0.5	0.7	0.1

Newport Banning Ranch
Year 2016 with Project Bluff Road Alternative - TPO Analysis
AM Peak Hour

Note: Queue reported is the number of cars per lane.
****

Newport Banning Ranch
Year 2016 with Project Bluff Road Alternative - TPO Analysis
AM Peak Hour

Level Of Service Computation Report
ICU 1(Loss as Cycle Length %) Method (Future Volume Alternative)

Intersection #29 Placentia Ave/19th St

Cycle (sec):	100	Critical Vol./Cap.(X):	0.525
Loss Time (sec):	0 (Y+R=4.0 sec)	Average Delay (sec/veh):	xxxxxx
Optimal Cycle:	48	Level Of Service:	A

Street Name:	Placentia Avenue						19th Street					
Approach:	North Bound			South Bound			East Bound			West Bound		
Movement:	L - T - R			L - T - R			L - T - R			L - T - R		
Control:	Protected			Protected			Protected			Protected		
Rights:	Include			Include			Include			Include		
Min. Green:	0	0	0	0	0	0	0	0	0	0	0	0
Lanes:	1 0 2	0 1		1 0 1	1 0		2 0 1	1 0		2 0 2	0 1	
Volume Module:												
Base Vol:	31	412	217	140	495	115	201	582	33	219	328	165
Growth Adj:	1.07	1.07	1.07	1.07	1.07	1.07	1.07	1.07	1.07	1.07	1.07	1.07
Initial Bse:	33	442	233	150	531	123	215	624	35	235	352	177
Added Vol:	0	39	13	0	14	0	0	0	0	4	0	0
Committed P:	0	1	0	0	0	0	0	0	0	0	0	0
Initial Fut:	33	482	246	150	545	123	215	624	35	239	352	177
User Adj:	1.00	1.00	1.00	1.00	1.00	1.00	1.00	1.00	1.00	1.00	1.00	1.00
PHF Adj:	1.00	1.00	1.00	1.00	1.00	1.00	1.00	1.00	1.00	1.00	1.00	1.00
PHF Volume:	33	482	246	150	545	123	215	624	35	239	352	177
Reduct Vol:	0	0	0	0	0	0	0	0	0	0	0	0
Reduced Vol:	33	482	246	150	545	123	215	624	35	239	352	177
PCE Adj:	1.00	1.00	1.00	1.00	1.00	1.00	1.00	1.00	1.00	1.00	1.00	1.00
MLF Adj:	1.00	1.00	1.00	1.00	1.00	1.00	1.00	1.00	1.00	1.00	1.00	1.00
FinalVolume:	33	482	246	150	545	123	215	624	35	239	352	177
Saturation Flow Module:												
Sat/Lane:	1600	1600	1600	1600	1600	1600	1600	1600	1600	1600	1600	1600
Adjustment:	1.00	1.00	1.00	1.00	1.00	1.00	1.00	1.00	1.00	1.00	1.00	1.00
Lanes:	1.00	2.00	1.00	1.00	1.63	0.37	2.00	1.89	0.11	2.00	2.00	1.00
Final Sat.:	1600	3200	1600	1600	2609	591	3200	3028	172	3200	3200	1600
Capacity Analysis Module:												
Vol/Sat:	0.02	0.15	0.15	0.09	0.21	0.21	0.07	0.21	0.21	0.07	0.11	0.11
Crit Moves:		****		****				****		****		

Newport Banning Ranch
Year 2016 with Project Bluff Road Alternative - TPO Analysis
AM Peak Hour

Level Of Service Computation Report
ICU 1(Loss as Cycle Length %) Method (Future Volume Alternative)

Intersection #30 Pomona Ave/19th St

Cycle (sec):	100	Critical Vol./Cap.(X):	0.503
Loss Time (sec):	0 (Y+R=4.0 sec)	Average Delay (sec/veh):	xxxxxx
Optimal Cycle:	46	Level Of Service:	A

Street Name:	Pomona Avenue						19th Street					
Approach:	North Bound			South Bound			East Bound			West Bound		
Movement:	L - T - R			L - T - R			L - T - R			L - T - R		
Control:	Protected			Protected			Prot+Permit			Prot+Permit		
Rights:	Include			Include			Include			Include		
Min. Green:	0	0	0	0	0	0	0	0	0	0	0	0
Lanes:	1 0 0 1 0			1 0 0 1 0			1 0 1 1 0			1 0 1 1 0		
Volume Module:												
Base Vol:	36	75	71	52	94	36	38	847	39	104	615	26
Growth Adj:	1.07	1.07	1.07	1.07	1.07	1.07	1.07	1.07	1.07	1.07	1.07	1.07
Initial Bse:	39	80	76	56	101	39	41	908	42	111	659	28
Added Vol:	0	0	0	0	0	0	0	13	0	0	4	0
Committed P:	0	0	0	0	0	0	0	0	0	0	0	0
Initial Fut:	39	80	76	56	101	39	41	921	42	111	663	28
User Adj:	1.00	1.00	1.00	1.00	1.00	1.00	1.00	1.00	1.00	1.00	1.00	1.00
PHF Adj:	1.00	1.00	1.00	1.00	1.00	1.00	1.00	1.00	1.00	1.00	1.00	1.00
PHF Volume:	39	80	76	56	101	39	41	921	42	111	663	28
Reduct Vol:	0	0	0	0	0	0	0	0	0	0	0	0
Reduced Vol:	39	80	76	56	101	39	41	921	42	111	663	28
PCE Adj:	1.00	1.00	1.00	1.00	1.00	1.00	1.00	1.00	1.00	1.00	1.00	1.00
MLF Adj:	1.00	1.00	1.00	1.00	1.00	1.00	1.00	1.00	1.00	1.00	1.00	1.00
FinalVolume:	39	80	76	56	101	39	41	921	42	111	663	28
Saturation Flow Module:												
Sat/Lane:	1600	1600	1600	1600	1600	1600	1600	1600	1600	1600	1600	1600
Adjustment:	1.00	1.00	1.00	1.00	1.00	1.00	1.00	1.00	1.00	1.00	1.00	1.00
Lanes:	1.00	0.51	0.49	1.00	0.72	0.28	1.00	1.91	0.09	1.00	1.92	0.08
Final Sat.:	1600	822	778	1600	1157	443	1600	3061	139	1600	3071	129
Capacity Analysis Module:												
Vol/Sat:	0.02	0.10	0.10	0.03	0.09	0.09	0.03	0.30	0.30	0.07	0.22	0.22
Crit Moves:		****		****				****		****		

Newport Banning Ranch
Year 2016 with Project Bluff Road Alternative - TPO Analysis
AM Peak Hour

Level Of Service Computation Report
ICU 1(Loss as Cycle Length %) Method (Future Volume Alternative)

Intersection #31 Anaheim Ave/19th St

Cycle (sec):	100	Critical Vol./Cap.(X):	0.505
Loss Time (sec):	0 (Y+R=4.0 sec)	Average Delay (sec/veh):	xxxxxx
Optimal Cycle:	38	Level Of Service:	A

Street Name:	Anaheim Avenue						19th Street					
Approach:	North Bound			South Bound			East Bound			West Bound		
Movement:	L - T - R			L - T - R			L - T - R			L - T - R		
Control:	Permitted			Permitted			Prot+Permit			Prot+Permit		
Rights:	Include			Include			Include			Include		
Min. Green:	0	0	0	0	0	0	0	0	0	0	0	0
Lanes:	1 0 0	1 0		0 1 0	1 0		0 1 0	1 0		1 1 0	1 0	
Volume Module:												
Base Vol:	27	26	88	41	41	23	24	961	18	103	724	33
Growth Adj:	1.07	1.07	1.07	1.07	1.07	1.07	1.07	1.07	1.07	1.07	1.07	1.07
Initial Bse:	29	28	94	44	44	25	26	1030	19	110	776	35
Added Vol:	0	0	0	0	0	0	0	13	0	0	4	0
Committed P:	0	0	0	0	0	0	0	0	0	0	0	0
Initial Fut:	29	28	94	44	44	25	26	1043	19	110	780	35
User Adj:	1.00	1.00	1.00	1.00	1.00	1.00	1.00	1.00	1.00	1.00	1.00	1.00
PHF Adj:	1.00	1.00	1.00	1.00	1.00	1.00	1.00	1.00	1.00	1.00	1.00	1.00
PHF Volume:	29	28	94	44	44	25	26	1043	19	110	780	35
Reduct Vol:	0	0	0	0	0	0	0	0	0	0	0	0
Reduced Vol:	29	28	94	44	44	25	26	1043	19	110	780	35
PCE Adj:	1.00	1.00	1.00	1.00	1.00	1.00	1.00	1.00	1.00	1.00	1.00	1.00
MLF Adj:	1.00	1.00	1.00	1.00	1.00	1.00	1.00	1.00	1.00	1.00	1.00	1.00
FinalVolume:	29	28	94	44	44	25	26	1043	19	110	780	35
Saturation Flow Module:												
Sat/Lane:	1600	1600	1600	1600	1600	1600	1600	1600	1600	1600	1600	1600
Adjustment:	1.00	1.00	1.00	1.00	1.00	1.00	1.00	1.00	1.00	1.00	1.00	1.00
Lanes:	1.00	0.23	0.77	1.00	0.64	0.36	1.00	1.96	0.04	1.00	2.00	1.00
Final Sat.:	1600	365	1235	1600	1025	575	1600	3142	58	1600	3200	1600
Capacity Analysis Module:												
Vol/Sat:	0.02	0.08	0.08	0.03	0.04	0.04	0.02	0.33	0.33	0.07	0.24	0.02
Crit Moves:		****		****				****		****		

Newport Banning Ranch
Year 2016 with Project Bluff Road Alternative - TPO Analysis
AM Peak Hour

Level Of Service Computation Report
ICU 1(Loss as Cycle Length %) Method (Future Volume Alternative)

Intersection #32 Park Ave/19th St

Cycle (sec):	100	Critical Vol./Cap.(X):	0.478
Loss Time (sec):	0 (Y+R=4.0 sec)	Average Delay (sec/veh):	xxxxxx
Optimal Cycle:	36	Level Of Service:	A

Street Name:	Park Avenue						19th St					
Approach:	North Bound			South Bound			East Bound			West Bound		
Movement:	L - T - R			L - T - R			L - T - R			L - T - R		
Control:	Permitted			Permitted			Prot+Permit			Prot+Permit		
Rights:	Include			Include			Include			Include		
Min. Green:	0	0	0	0	0	0	0	0	0	0	0	0
Lanes:	2 0 0 0 1			0 0 0 0 0			1 0 2 0 1			1 0 3 0 0		
Volume Module:												
Base Vol:	43	0	108	0	0	0	6	1012	60	94	800	0
Growth Adj:	1.07	1.07	1.07	1.07	1.07	1.07	1.07	1.07	1.07	1.07	1.07	1.07
Initial Bse:	46	0	116	0	0	0	6	1085	64	101	858	0
Added Vol:	0	0	0	0	0	0	0	13	0	0	4	0
Committed P:	0	0	0	0	0	0	0	0	0	0	0	0
Initial Fut:	46	0	116	0	0	0	6	1098	64	101	862	0
User Adj:	1.00	1.00	1.00	1.00	1.00	1.00	1.00	1.00	1.00	1.00	1.00	1.00
PHF Adj:	1.00	1.00	1.00	1.00	1.00	1.00	1.00	1.00	1.00	1.00	1.00	1.00
PHF Volume:	46	0	116	0	0	0	6	1098	64	101	862	0
Reduct Vol:	0	0	0	0	0	0	0	0	0	0	0	0
Reduced Vol:	46	0	116	0	0	0	6	1098	64	101	862	0
PCE Adj:	1.00	1.00	1.00	1.00	1.00	1.00	1.00	1.00	1.00	1.00	1.00	1.00
MLF Adj:	1.00	1.00	1.00	1.00	1.00	1.00	1.00	1.00	1.00	1.00	1.00	1.00
FinalVolume:	46	0	116	0	0	0	6	1098	64	101	862	0
Saturation Flow Module:												
Sat/Lane:	1600	1600	1600	1600	1600	1600	1600	1600	1600	1600	1600	1600
Adjustment:	1.00	1.00	1.00	1.00	1.00	1.00	1.00	1.00	1.00	1.00	1.00	1.00
Lanes:	2.00	0.00	1.00	0.00	0.00	0.00	1.00	2.00	1.00	1.00	3.00	0.00
Final Sat.:	3200	0	1600	0	0	0	1600	3200	1600	1600	4800	0
Capacity Analysis Module:												
Vol/Sat:	0.01	0.00	0.07	0.00	0.00	0.00	0.00	0.34	0.04	0.06	0.18	0.00
Crit Moves:			****					****		****		

Newport Banning Ranch
Year 2016 with Project Bluff Road Alternative - TPO Analysis
AM Peak Hour

Level Of Service Computation Report
ICU 1(Loss as Cycle Length %) Method (Future Volume Alternative)

Intersection #33 Harbor Blvd/19th St

Cycle (sec):	100	Critical Vol./Cap.(X):	0.431
Loss Time (sec):	0 (Y+R=4.0 sec)	Average Delay (sec/veh):	xxxxxx
Optimal Cycle:	40	Level Of Service:	A

Street Name:	Harbor Boulevard						19th Street					
Approach:	North Bound			South Bound			East Bound			West Bound		
Movement:	L - T - R			L - T - R			L - T - R			L - T - R		
Control:	Protected			Protected			Protected			Protected		
Rights:	Include			Include			Include			Include		
Min. Green:	0	0	0	0	0	0	0	0	0	0	0	0
Lanes:	1 0 2	1 0		1 0 2	0 1		2 0 2	1 0		1 0 3	0 1	
Volume Module:												
Base Vol:	18	287	14	141	425	260	216	928	37	36	630	161
Growth Adj:	1.07	1.07	1.07	1.07	1.07	1.07	1.07	1.07	1.07	1.07	1.07	1.07
Initial Bse:	19	308	15	151	456	279	232	995	40	39	675	173
Added Vol:	0	64	0	0	24	4	13	0	0	0	0	0
Committed P:	3	5	0	0	6	0	0	0	2	0	0	0
Initial Fut:	22	377	15	151	486	283	245	995	42	39	675	173
User Adj:	1.00	1.00	1.00	1.00	1.00	1.00	1.00	1.00	1.00	1.00	1.00	1.00
PHF Adj:	1.00	1.00	1.00	1.00	1.00	1.00	1.00	1.00	1.00	1.00	1.00	1.00
PHF Volume:	22	377	15	151	486	283	245	995	42	39	675	173
Reduct Vol:	0	0	0	0	0	0	0	0	0	0	0	0
Reduced Vol:	22	377	15	151	486	283	245	995	42	39	675	173
PCE Adj:	1.00	1.00	1.00	1.00	1.00	1.00	1.00	1.00	1.00	1.00	1.00	1.00
MLF Adj:	1.00	1.00	1.00	1.00	1.00	1.00	1.00	1.00	1.00	1.00	1.00	1.00
FinalVolume:	22	377	15	151	486	283	245	995	42	39	675	173
Saturation Flow Module:												
Sat/Lane:	1600	1600	1600	1600	1600	1600	1600	1600	1600	1600	1600	1600
Adjustment:	1.00	1.00	1.00	1.00	1.00	1.00	1.00	1.00	1.00	1.00	1.00	1.00
Lanes:	1.00	2.89	0.11	1.00	2.00	1.00	2.00	2.88	0.12	1.00	3.00	1.00
Final Sat.:	1600	4616	184	1600	3200	1600	3200	4607	193	1600	4800	1600
Capacity Analysis Module:												
Vol/Sat:	0.01	0.08	0.08	0.09	0.15	0.18	0.08	0.22	0.22	0.02	0.14	0.11
Crit Moves:	****					****		****		****		

Newport Banning Ranch
Year 2016 with Project Bluff Road Alternative - TPO Analysis
AM Peak Hour

Level Of Service Computation Report
ICU 1(Loss as Cycle Length %) Method (Future Volume Alternative)

Intersection #34 Newport Blvd/19th St

Cycle (sec):	120	Critical Vol./Cap.(X):	0.903
Loss Time (sec):	0 (Y+R=4.0 sec)	Average Delay (sec/veh):	xxxxxx
Optimal Cycle:	180	Level Of Service:	E

Street Name:	Newport Boulevard									19th Street								
Approach:	North Bound			South Bound			East Bound			West Bound		
Movement:	L	- T	- R	L	- T	- R	L	- T	- R	L	- T	- R
Control:	Protected			Protected			Split Phase			Split Phase		
Rights:	Include			Include			Include			Include		
Min. Green:	0	0	0	0	0	0	0	0	0	0	0	0
Lanes:	1 0	3 1	0	1 0	3 1	1	2 1	1 0	1	1 0	2 1	1
Volume Module:												
Base Vol:	31	2709	9	181	2440	486	886	183	14	21	162	237
Growth Adj:	1.07	1.07	1.07	1.07	1.07	1.07	1.07	1.07	1.07	1.07	1.07	1.07
Initial Bse:	33	2904	10	194	2616	521	950	196	15	23	174	254
Added Vol:	0	304	0	0	111	0	0	0	0	0	0	0
Committed P:	0	12	1	0	9	0	0	0	2	0	0	0
Initial Fut:	33	3220	11	194	2736	521	950	196	17	23	174	254
User Adj:	1.00	1.00	1.00	1.00	1.00	1.00	1.00	1.00	1.00	1.00	1.00	1.00
PHF Adj:	1.00	1.00	1.00	1.00	1.00	1.00	1.00	1.00	1.00	1.00	1.00	1.00
PHF Volume:	33	3220	11	194	2736	521	950	196	17	23	174	254
Reduct Vol:	0	0	0	0	0	0	0	0	0	0	0	0
Reduced Vol:	33	3220	11	194	2736	521	950	196	17	23	174	254
PCE Adj:	1.00	1.00	1.00	1.00	1.00	1.00	1.00	1.00	1.00	1.00	1.00	1.00
MLF Adj:	1.00	1.00	1.00	1.00	1.00	1.00	1.00	1.00	1.00	1.00	1.00	1.00
FinalVolume:	33	3220	11	194	2736	521	950	196	17	23	174	254
Saturation Flow Module:												
Sat/Lane:	1600	1600	1600	1600	1600	1600	1600	1600	1600	1600	1600	1600
Adjustment:	1.00	1.00	1.00	1.00	1.00	1.00	1.00	1.00	1.00	1.00	1.00	1.00
Lanes:	1.00	3.99	0.01	1.00	4.00	1.00	3.00	1.00	1.00	1.00	2.00	2.00
Final Sat.:	1600	6379	21	1600	6400	1600	4800	1600	1600	1600	3200	3200
Capacity Analysis Module:												
Vol/Sat:	0.02	0.50	0.50	0.12	0.43	0.33	0.20	0.12	0.01	0.01	0.05	0.08
Crit Moves:		****		****			****					****

Newport Banning Ranch
Year 2016 with Project Bluff Road Alternative - TPO Analysis
AM Peak Hour

Level Of Service Computation Report
ICU 1(Loss as Cycle Length %) Method (Future Volume Alternative)

Intersection #35 Newport Blvd/Broadway

Cycle (sec):	120	Critical Vol./Cap.(X):	0.644
Loss Time (sec):	0 (Y+R=4.0 sec)	Average Delay (sec/veh):	xxxxxx
Optimal Cycle:	52	Level Of Service:	B

Street Name:	Newport Boulevard									Broadway								
Approach:	North Bound			South Bound			East Bound			West Bound		
Movement:	L	- T	- R	L	- T	- R	L	- T	- R	L	- T	- R
Control:	Protected			Protected			Permitted			Permitted		
Rights:	Include			Include			Include			Include		
Min. Green:	0	0	0	0	0	0	0	0	0	0	0	0
Lanes:	1 0	3 1	0	1 0	3 0	1	0 1	0 0	1	1 0	0 1	0
Volume Module:												
Base Vol:	4	2678	8	60	2396	7	6	9	3	38	12	102
Growth Adj:	1.07	1.07	1.07	1.07	1.07	1.07	1.07	1.07	1.07	1.07	1.07	1.07
Initial Bse:	4	2871	9	64	2569	8	6	10	3	41	13	109
Added Vol:	0	304	0	0	111	0	0	0	0	0	0	0
Committed P:	0	14	1	0	12	0	0	0	0	0	0	0
Initial Fut:	4	3189	10	64	2692	8	6	10	3	41	13	109
User Adj:	1.00	1.00	1.00	1.00	1.00	1.00	1.00	1.00	1.00	1.00	1.00	1.00
PHF Adj:	1.00	1.00	1.00	1.00	1.00	1.00	1.00	1.00	1.00	1.00	1.00	1.00
PHF Volume:	4	3189	10	64	2692	8	6	10	3	41	13	109
Reduct Vol:	0	0	0	0	0	0	0	0	0	0	0	0
Reduced Vol:	4	3189	10	64	2692	8	6	10	3	41	13	109
PCE Adj:	1.00	1.00	1.00	1.00	1.00	1.00	1.00	1.00	1.00	1.00	1.00	1.00
MLF Adj:	1.00	1.00	1.00	1.00	1.00	1.00	1.00	1.00	1.00	1.00	1.00	1.00
FinalVolume:	4	3189	10	64	2692	8	6	10	3	41	13	109
Saturation Flow Module:												
Sat/Lane:	1600	1600	1600	1600	1600	1600	1600	1600	1600	1600	1600	1600
Adjustment:	1.00	1.00	1.00	1.00	1.00	1.00	1.00	1.00	1.00	1.00	1.00	1.00
Lanes:	1.00	3.99	0.01	1.00	3.00	1.00	0.40	0.60	1.00	1.00	0.11	0.89
Final Sat.:	1600	6381	19	1600	4800	1600	640	960	1600	1600	168	1432
Capacity Analysis Module:												
Vol/Sat:	0.00	0.50	0.50	0.04	0.56	0.00	0.00	0.01	0.00	0.03	0.08	0.08
Crit Moves:	****				****		****				****	

Newport Banning Ranch
Year 2016 with Project Bluff Road Alternative - TPO Analysis
AM Peak Hour

Level Of Service Computation Report
ICU 1(Loss as Cycle Length %) Method (Future Volume Alternative)

Intersection #36 Newport Blvd/Harbor Blvd

Cycle (sec):	120	Critical Vol./Cap.(X):	0.783
Loss Time (sec):	0 (Y+R=4.0 sec)	Average Delay (sec/veh):	xxxxxx
Optimal Cycle:	105	Level Of Service:	C

Street Name:	Newport Boulevard						Harbor Boulevard					
Approach:	North Bound			South Bound			East Bound			West Bound		
Movement:	L - T - R			L - T - R			L - T - R			L - T - R		
Control:	Protected			Protected			Protected			Protected		
Rights:	Include			Include			Ovl			Include		
Min. Green:	0	0	0	0	0	0	0	0	0	0	0	0
Lanes:	2 0 4 0 0			0 0 2 1 0			1 0 0 0 2			0 0 0 0 0		
Volume Module:												
Base Vol:	317	2653	0	0	2559	49	26	0	486	0	0	0
Growth Adj:	1.07	1.07	1.07	1.07	1.07	1.07	1.07	1.07	1.07	1.07	1.07	1.07
Initial Bse:	340	2844	0	0	2743	53	28	0	521	0	0	0
Added Vol:	64	304	0	0	111	0	0	0	24	0	0	0
Committed P:	13	17	0	0	14	0	0	0	14	0	0	0
Initial Fut:	417	3165	0	0	2868	53	28	0	559	0	0	0
User Adj:	1.00	1.00	1.00	1.00	1.00	1.00	1.00	1.00	1.00	1.00	1.00	1.00
PHF Adj:	1.00	1.00	1.00	1.00	1.00	1.00	1.00	1.00	1.00	1.00	1.00	1.00
PHF Volume:	417	3165	0	0	2868	53	28	0	559	0	0	0
Reduct Vol:	0	0	0	0	0	0	0	0	0	0	0	0
Reduced Vol:	417	3165	0	0	2868	53	28	0	559	0	0	0
PCE Adj:	1.00	1.00	1.00	1.00	1.00	1.00	1.00	1.00	1.00	1.00	1.00	1.00
MLF Adj:	1.00	1.00	1.00	1.00	1.00	1.00	1.00	1.00	1.00	1.00	1.00	1.00
FinalVolume:	417	3165	0	0	2868	53	28	0	559	0	0	0
OvlAdjVol:									142			
Saturation Flow Module:												
Sat/Lane:	1600	1600	1600	1600	1600	1600	1600	1600	1600	1600	1600	1600
Adjustment:	1.00	1.00	1.00	1.00	1.00	1.00	1.00	1.00	1.00	1.00	1.00	1.00
Lanes:	2.00	4.00	0.00	0.00	2.95	0.05	1.00	0.00	2.00	0.00	0.00	0.00
Final Sat.:	3200	6400	0	0	4714	86	1600	0	3200	0	0	0
Capacity Analysis Module:												
Vol/Sat:	0.13	0.49	0.00	0.00	0.61	0.61	0.02	0.00	0.17	0.00	0.00	0.00
OvlAdjV/S:									0.04			
Crit Moves:	****				****				****			

Newport Banning Ranch
Year 2016 with Project Bluff Road Alternative - TPO Analysis
AM Peak Hour

Level Of Service Computation Report
ICU 1(Loss as Cycle Length %) Method (Future Volume Alternative)

Intersection #37 Newport Blvd/18th St (Rochester St)

Cycle (sec):	120	Critical Vol./Cap.(X):	0.837
Loss Time (sec):	0 (Y+R=4.0 sec)	Average Delay (sec/veh):	xxxxxx
Optimal Cycle:	140	Level Of Service:	D

Street Name:	Newport Boulevard						18th Street (Rochester Street)					
Approach:	North Bound			South Bound			East Bound			West Bound		
Movement:	L - T - R			L - T - R			L - T - R			L - T - R		
Control:	Protected			Protected			Split Phase			Split Phase		
Rights:	Include			Include			Include			Include		
Min. Green:	0	0	0	0	0	0	0	0	0	0	0	0
Lanes:	1 0 3 1 0			1 0 3 0 1			2 0 1 0 1			1 0 0 1 0		
Volume Module:												
Base Vol:	64	2852	7	85	2743	165	179	81	26	7	68	30
Growth Adj:	1.07	1.07	1.07	1.07	1.07	1.07	1.07	1.07	1.07	1.07	1.07	1.07
Initial Bse:	69	3057	8	91	2940	177	192	87	28	8	73	32
Added Vol:	0	299	0	0	112	24	69	0	0	0	0	0
Committed P:	6	35	0	0	35	0	0	0	15	0	0	0
Initial Fut:	75	3391	8	91	3087	201	261	87	43	8	73	32
User Adj:	1.00	1.00	1.00	1.00	1.00	1.00	1.00	1.00	1.00	1.00	1.00	1.00
PHF Adj:	1.00	1.00	1.00	1.00	1.00	1.00	1.00	1.00	1.00	1.00	1.00	1.00
PHF Volume:	75	3391	8	91	3087	201	261	87	43	8	73	32
Reduct Vol:	0	0	0	0	0	0	0	0	0	0	0	0
Reduced Vol:	75	3391	8	91	3087	201	261	87	43	8	73	32
PCE Adj:	1.00	1.00	1.00	1.00	1.00	1.00	1.00	1.00	1.00	1.00	1.00	1.00
MLF Adj:	1.00	1.00	1.00	1.00	1.00	1.00	1.00	1.00	1.00	1.00	1.00	1.00
FinalVolume:	75	3391	8	91	3087	201	261	87	43	8	73	32
Saturation Flow Module:												
Sat/Lane:	1600	1600	1600	1600	1600	1600	1600	1600	1600	1600	1600	1600
Adjustment:	1.00	1.00	1.00	1.00	1.00	1.00	1.00	1.00	1.00	1.00	1.00	1.00
Lanes:	1.00	3.99	0.01	1.00	3.00	1.00	2.00	1.00	1.00	1.00	0.69	0.31
Final Sat.:	1600	6386	14	1600	4800	1600	3200	1600	1600	1600	1110	490
Capacity Analysis Module:												
Vol/Sat:	0.05	0.53	0.53	0.06	0.64	0.13	0.08	0.05	0.03	0.00	0.07	0.07
Crit Moves:	****				****		****				****	

Newport Banning Ranch
Year 2016 with Project Bluff Road Alternative - TPO Analysis
AM Peak Hour

Level Of Service Computation Report
ICU 1(Loss as Cycle Length %) Method (Future Volume Alternative)

Intersection #38 Placentia Ave/18th St

Cycle (sec):	100	Critical Vol./Cap.(X):	0.482
Loss Time (sec):	0 (Y+R=4.0 sec)	Average Delay (sec/veh):	xxxxxx
Optimal Cycle:	36	Level Of Service:	A

Street Name:	Placentia Avenue						18th Street					
Approach:	North Bound			South Bound			East Bound			West Bound		
Movement:	L - T - R			L - T - R			L - T - R			L - T - R		
Control:	Protected			Protected			Permitted			Permitted		
Rights:	Include			Include			Include			Include		
Min. Green:	0	0	0	0	0	0	0	0	0	0	0	0
Lanes:	1 0 1	1 0		1 0 1	1 0		1 0 0	1 0		1 0 0	1 0	
Volume Module:												
Base Vol:	25	488	23	38	725	106	46	120	27	41	173	45
Growth Adj:	1.07	1.07	1.07	1.07	1.07	1.07	1.07	1.07	1.07	1.07	1.07	1.07
Initial Bse:	27	523	25	41	777	114	49	129	29	44	185	48
Added Vol:	0	-43	0	0	-15	0	0	69	0	0	24	0
Committed P:	0	4	0	0	0	0	0	0	0	0	0	0
Initial Fut:	27	484	25	41	762	114	49	198	29	44	209	48
User Adj:	1.00	1.00	1.00	1.00	1.00	1.00	1.00	1.00	1.00	1.00	1.00	1.00
PHF Adj:	1.00	1.00	1.00	1.00	1.00	1.00	1.00	1.00	1.00	1.00	1.00	1.00
PHF Volume:	27	484	25	41	762	114	49	198	29	44	209	48
Reduct Vol:	0	0	0	0	0	0	0	0	0	0	0	0
Reduced Vol:	27	484	25	41	762	114	49	198	29	44	209	48
PCE Adj:	1.00	1.00	1.00	1.00	1.00	1.00	1.00	1.00	1.00	1.00	1.00	1.00
MLF Adj:	1.00	1.00	1.00	1.00	1.00	1.00	1.00	1.00	1.00	1.00	1.00	1.00
FinalVolume:	27	484	25	41	762	114	49	198	29	44	209	48
Saturation Flow Module:												
Sat/Lane:	1600	1600	1600	1600	1600	1600	1600	1600	1600	1600	1600	1600
Adjustment:	1.00	1.00	1.00	1.00	1.00	1.00	1.00	1.00	1.00	1.00	1.00	1.00
Lanes:	1.00	1.90	0.10	1.00	1.74	0.26	1.00	0.87	0.13	1.00	0.81	0.19
Final Sat.:	1600	3045	155	1600	2785	415	1600	1396	204	1600	1300	300
Capacity Analysis Module:												
Vol/Sat:	0.02	0.16	0.16	0.03	0.27	0.27	0.03	0.14	0.14	0.03	0.16	0.16
Crit Moves:	****				****		****				****	

Newport Banning Ranch
Year 2016 with Project Bluff Road Alternative - TPO Analysis
AM Peak Hour

Level Of Service Computation Report
2000 HCM 4-Way Stop Method (Future Volume Alternative)

Intersection #39 Whittier Ave/17th St

Cycle (sec):	100	Critical Vol./Cap.(X):	0.493
Loss Time (sec):	0 (Y+R=4.0 sec)	Average Delay (sec/veh):	10.3
Optimal Cycle:	0	Level Of Service:	B

Street Name:	Whittier Avenue						17th St					
Approach:	North Bound			South Bound			East Bound			West Bound		
Movement:	L -	T -	R	L -	T -	R	L -	T -	R	L -	T -	R
Control:	Stop Sign			Stop Sign			Stop Sign			Stop Sign		
Rights:	Include			Include			Include			Include		
Min. Green:	0	0	0	0	0	0	0	0	0	0	0	0
Lanes:	0 0	0 1	0	0 0	1! 0	0	0 0	1! 0	0	0 0	1! 0	0
Volume Module:												
Base Vol:	0	35	2	24	23	53	56	2	5	1	0	24
Growth Adj:	1.07	1.07	1.07	1.07	1.07	1.07	1.07	1.07	1.07	1.07	1.07	1.07
Initial Bse:	0	38	2	26	25	57	60	2	5	1	0	26
Added Vol:	0	0	0	0	0	24	69	247	0	0	105	0
Committed P:	0	0	0	0	0	0	0	0	0	0	0	0
Initial Fut:	0	38	2	26	25	81	129	249	5	1	105	26
User Adj:	1.00	1.00	1.00	1.00	1.00	1.00	1.00	1.00	1.00	1.00	1.00	1.00
PHF Adj:	1.00	1.00	1.00	1.00	1.00	1.00	1.00	1.00	1.00	1.00	1.00	1.00
PHF Volume:	0	38	2	26	25	81	129	249	5	1	105	26
Reduct Vol:	0	0	0	0	0	0	0	0	0	0	0	0
Reduced Vol:	0	38	2	26	25	81	129	249	5	1	105	26
PCE Adj:	1.00	1.00	1.00	1.00	1.00	1.00	1.00	1.00	1.00	1.00	1.00	1.00
MLF Adj:	1.00	1.00	1.00	1.00	1.00	1.00	1.00	1.00	1.00	1.00	1.00	1.00
FinalVolume:	0	38	2	26	25	81	129	249	5	1	105	26
Saturation Flow Module:												
Adjustment:	1.00	1.00	1.00	1.00	1.00	1.00	1.00	1.00	1.00	1.00	1.00	1.00
Lanes:	0.00	0.95	0.05	0.20	0.19	0.61	0.34	0.65	0.01	0.01	0.80	0.19
Final Sat.:	0	593	34	136	130	427	262	505	11	6	592	145
Capacity Analysis Module:												
Vol/Sat:	xxxx	0.06	0.06	0.19	0.19	0.19	0.49	0.49	0.49	0.18	0.18	0.18
Crit Moves:		****			****		****			****		
Delay/Veh:	0.0	8.5	8.5	8.8	8.8	8.8	11.7	11.7	11.7	8.6	8.6	8.6
Delay Adj:	1.00	1.00	1.00	1.00	1.00	1.00	1.00	1.00	1.00	1.00	1.00	1.00
AdjDel/Veh:	0.0	8.5	8.5	8.8	8.8	8.8	11.7	11.7	11.7	8.6	8.6	8.6
LOS by Move:	*	A	A	A	A	A	B	B	B	A	A	A
ApproachDel:		8.5			8.8			11.7			8.6	
Delay Adj:		1.00			1.00			1.00			1.00	
ApprAdjDel:		8.5			8.8			11.7			8.6	
LOS by Appr:		A			A			B			A	
AllWayAvgQ:	0.1	0.1	0.1	0.2	0.2	0.2	0.9	0.9	0.9	0.2	0.2	0.2

Newport Banning Ranch
Year 2016 with Project Bluff Road Alternative - TPO Analysis
AM Peak Hour

Note: Queue reported is the number of cars per lane.

Newport Banning Ranch
Year 2016 with Project Bluff Road Alternative - TPO Analysis
AM Peak Hour

Level Of Service Computation Report
2000 HCM 4-Way Stop Method (Future Volume Alternative)

Intersection #40 Monrovia Ave/17th St

Cycle (sec):	100	Critical Vol./Cap.(X):	0.626
Loss Time (sec):	0 (Y+R=4.0 sec)	Average Delay (sec/veh):	14.9
Optimal Cycle:	0	Level Of Service:	B

Street Name:	Monrovia Avenue						17th Street					
Approach:	North Bound			South Bound			East Bound			West Bound		
Movement:	L -	T -	R	L -	T -	R	L -	T -	R	L -	T -	R
Control:	Stop Sign			Stop Sign			Stop Sign			Stop Sign		
Rights:	Include			Include			Include			Include		
Min. Green:	0	0	0	0	0	0	0	0	0	0	0	0
Lanes:	0 0	1! 0	0	0 0	1! 0	0	0 0	1! 0	0	0 0	1! 0	0
Volume Module:												
Base Vol:	36	88	63	26	86	12	14	75	32	67	135	56
Growth Adj:	1.07	1.07	1.07	1.07	1.07	1.07	1.07	1.07	1.07	1.07	1.07	1.07
Initial Bse:	39	94	68	28	92	13	15	80	34	72	145	60
Added Vol:	0	53	0	-8	19	23	63	184	0	0	82	-21
Committed P:	0	0	0	0	0	0	0	0	0	0	0	0
Initial Fut:	39	147	68	20	111	36	78	264	34	72	227	39
User Adj:	1.00	1.00	1.00	1.00	1.00	1.00	1.00	1.00	1.00	1.00	1.00	1.00
PHF Adj:	1.00	1.00	1.00	1.00	1.00	1.00	1.00	1.00	1.00	1.00	1.00	1.00
PHF Volume:	39	147	68	20	111	36	78	264	34	72	227	39
Reduct Vol:	0	0	0	0	0	0	0	0	0	0	0	0
Reduced Vol:	39	147	68	20	111	36	78	264	34	72	227	39
PCE Adj:	1.00	1.00	1.00	1.00	1.00	1.00	1.00	1.00	1.00	1.00	1.00	1.00
MLF Adj:	1.00	1.00	1.00	1.00	1.00	1.00	1.00	1.00	1.00	1.00	1.00	1.00
FinalVolume:	39	147	68	20	111	36	78	264	34	72	227	39
Saturation Flow Module:												
Adjustment:	1.00	1.00	1.00	1.00	1.00	1.00	1.00	1.00	1.00	1.00	1.00	1.00
Lanes:	0.15	0.58	0.27	0.12	0.67	0.21	0.21	0.70	0.09	0.21	0.67	0.12
Final Sat.:	83	316	145	60	335	108	125	422	55	126	397	68
Capacity Analysis Module:												
Vol/Sat:	0.47	0.47	0.47	0.33	0.33	0.33	0.63	0.63	0.63	0.57	0.57	0.57
Crit Moves:		****				****		****			****	
Delay/Veh:	13.5	13.5	13.5	11.8	11.8	11.8	16.9	16.9	16.9	15.4	15.4	15.4
Delay Adj:	1.00	1.00	1.00	1.00	1.00	1.00	1.00	1.00	1.00	1.00	1.00	1.00
AdjDel/Veh:	13.5	13.5	13.5	11.8	11.8	11.8	16.9	16.9	16.9	15.4	15.4	15.4
LOS by Move:	B	B	B	B	B	B	C	C	C	C	C	C
ApproachDel:		13.5			11.8			16.9			15.4	
Delay Adj:		1.00			1.00			1.00			1.00	
ApprAdjDel:		13.5			11.8			16.9			15.4	
LOS by Appr:		B			B			C			C	
AllWayAvgQ:	0.7	0.7	0.7	0.4	0.4	0.4	1.4	1.4	1.4	1.1	1.1	1.1

Newport Banning Ranch
Year 2016 with Project Bluff Road Alternative - TPO Analysis
AM Peak Hour

Note: Queue reported is the number of cars per lane.

Newport Banning Ranch
Year 2016 with Project Bluff Road Alternative - TPO Analysis
AM Peak Hour

Level Of Service Computation Report
ICU 1(Loss as Cycle Length %) Method (Future Volume Alternative)

Intersection #41 Placentia Ave/17th St

Cycle (sec):	100	Critical Vol./Cap.(X):	0.490
Loss Time (sec):	0 (Y+R=4.0 sec)	Average Delay (sec/veh):	xxxxxx
Optimal Cycle:	28	Level Of Service:	A

Street Name:	Placentia Avenue						17th St					
Approach:	North Bound			South Bound			East Bound			West Bound		
Movement:	L - T - R			L - T - R			L - T - R			L - T - R		
Control:	Permitted			Permitted			Permitted			Permitted		
Rights:	Include			Include			Include			Include		
Min. Green:	0	0	0	0	0	0	0	0	0	0	0	0
Lanes:	1 0	1 1	0	1 0	1 1	0	1 0	0 1	0	1 0	0 1	0
Volume Module:												
Base Vol:	89	378	59	166	537	77	12	141	31	44	162	80
Growth Adj:	1.07	1.07	1.07	1.07	1.07	1.07	1.07	1.07	1.07	1.07	1.07	1.07
Initial Bse:	95	405	63	178	576	83	13	151	33	47	174	86
Added Vol:	-21	-88	0	0	-31	16	45	139	-8	0	66	0
Committed P:	3	5	3	0	2	0	0	0	0	0	0	0
Initial Fut:	77	322	66	178	547	99	58	290	25	47	240	86
User Adj:	1.00	1.00	1.00	1.00	1.00	1.00	1.00	1.00	1.00	1.00	1.00	1.00
PHF Adj:	1.00	1.00	1.00	1.00	1.00	1.00	1.00	1.00	1.00	1.00	1.00	1.00
PHF Volume:	77	322	66	178	547	99	58	290	25	47	240	86
Reduct Vol:	0	0	0	0	0	0	0	0	0	0	0	0
Reduced Vol:	77	322	66	178	547	99	58	290	25	47	240	86
PCE Adj:	1.00	1.00	1.00	1.00	1.00	1.00	1.00	1.00	1.00	1.00	1.00	1.00
MLF Adj:	1.00	1.00	1.00	1.00	1.00	1.00	1.00	1.00	1.00	1.00	1.00	1.00
FinalVolume:	77	322	66	178	547	99	58	290	25	47	240	86
Saturation Flow Module:												
Sat/Lane:	1600	1600	1600	1600	1600	1600	1600	1600	1600	1600	1600	1600
Adjustment:	1.00	1.00	1.00	1.00	1.00	1.00	1.00	1.00	1.00	1.00	1.00	1.00
Lanes:	1.00	1.66	0.34	1.00	1.69	0.31	1.00	0.92	0.08	1.00	0.74	0.26
Final Sat.:	1600	2654	546	1600	2711	489	1600	1472	128	1600	1178	422
Capacity Analysis Module:												
Vol/Sat:	0.05	0.12	0.12	0.11	0.20	0.20	0.04	0.20	0.20	0.03	0.20	0.20
Crit Moves:	****				****		****				****	

Newport Banning Ranch
Year 2016 with Project Bluff Road Alternative - TPO Analysis
AM Peak Hour

Level Of Service Computation Report
2000 HCM 4-Way Stop Method (Future Volume Alternative)

Intersection #42 Pomona Ave/17th St

Cycle (sec):	100	Critical Vol./Cap.(X):	0.888
Loss Time (sec):	0 (Y+R=4.0 sec)	Average Delay (sec/veh):	25.1
Optimal Cycle:	0	Level Of Service:	D

Street Name:	Pomona Avenue						17th Street					
Approach:	North Bound			South Bound			East Bound			West Bound		
Movement:	L -	T -	R	L -	T -	R	L -	T -	R	L -	T -	R
Control:	Stop Sign			Stop Sign			Stop Sign			Stop Sign		
Rights:	Include			Include			Include			Include		
Min. Green:	0	0	0	0	0	0	0	0	0	0	0	0
Lanes:	0 0	1! 0	0	0 0	1! 0	0	1 0	0 1	0	1 0	1 0	1
Volume Module:												
Base Vol:	6	40	19	101	116	59	12	303	29	60	273	53
Growth Adj:	1.07	1.07	1.07	1.07	1.07	1.07	1.07	1.07	1.07	1.07	1.07	1.07
Initial Bse:	6	43	20	108	124	63	13	325	31	64	293	57
Added Vol:	0	0	0	0	0	0	0	139	0	0	66	0
Committed P:	0	0	0	0	0	0	0	0	0	0	0	0
Initial Fut:	6	43	20	108	124	63	13	464	31	64	359	57
User Adj:	1.00	1.00	1.00	1.00	1.00	1.00	1.00	1.00	1.00	1.00	1.00	1.00
PHF Adj:	1.00	1.00	1.00	1.00	1.00	1.00	1.00	1.00	1.00	1.00	1.00	1.00
PHF Volume:	6	43	20	108	124	63	13	464	31	64	359	57
Reduct Vol:	0	0	0	0	0	0	0	0	0	0	0	0
Reduced Vol:	6	43	20	108	124	63	13	464	31	64	359	57
PCE Adj:	1.00	1.00	1.00	1.00	1.00	1.00	1.00	1.00	1.00	1.00	1.00	1.00
MLF Adj:	1.00	1.00	1.00	1.00	1.00	1.00	1.00	1.00	1.00	1.00	1.00	1.00
FinalVolume:	6	43	20	108	124	63	13	464	31	64	359	57
Saturation Flow Module:												
Adjustment:	1.00	1.00	1.00	1.00	1.00	1.00	1.00	1.00	1.00	1.00	1.00	1.00
Lanes:	0.09	0.62	0.29	0.37	0.42	0.21	1.00	0.94	0.06	1.00	1.00	1.00
Final Sat.:	41	271	129	190	218	111	510	522	35	497	538	595
Capacity Analysis Module:												
Vol/Sat:	0.16	0.16	0.16	0.57	0.57	0.57	0.03	0.89	0.89	0.13	0.67	0.10
Crit Moves:	****				****			****			****	
Delay/Veh:	11.4	11.4	11.4	17.1	17.1	17.1	9.8	39.2	39.2	10.7	20.5	9.1
Delay Adj:	1.00	1.00	1.00	1.00	1.00	1.00	1.00	1.00	1.00	1.00	1.00	1.00
AdjDel/Veh:	11.4	11.4	11.4	17.1	17.1	17.1	9.8	39.2	39.2	10.7	20.5	9.1
LOS by Move:	B	B	B	C	C	C	A	E	E	B	C	A
ApproachDel:	11.4			17.1			38.5			17.8		
Delay Adj:	1.00			1.00			1.00			1.00		
ApprAdjDel:	11.4			17.1			38.5			17.8		
LOS by Appr:	B			C			E			C		
AllWayAvgQ:	0.1	0.1	0.1	1.1	1.1	1.1	0.0	4.7	4.7	0.1	1.7	0.1

Newport Banning Ranch
Year 2016 with Project Bluff Road Alternative - TPO Analysis
AM Peak Hour

Note: Queue reported is the number of cars per lane.

Newport Banning Ranch
Year 2016 with Project Bluff Road Alternative - TPO Analysis
AM Peak Hour

Level Of Service Computation Report
ICU 1(Loss as Cycle Length %) Method (Future Volume Alternative)

Intersection #43 Superior Ave/17th St

Cycle (sec):	100	Critical Vol./Cap.(X):	0.820
Loss Time (sec):	0 (Y+R=4.0 sec)	Average Delay (sec/veh):	xxxxxx
Optimal Cycle:	127	Level Of Service:	D

Street Name:	Superior Avenue						17th Street					
Approach:	North Bound			South Bound			East Bound			West Bound		
Movement:	L - T - R			L - T - R			L - T - R			L - T - R		
Control:	Prot+Permit			Prot+Permit			Prot+Permit			Prot+Permit		
Rights:	Include			Include			Include			Include		
Min. Green:	0	0	0	0	0	0	0	0	0	0	0	0
Lanes:	1 0 0 1 1			1 0 1 1 0			1 0 1 1 0			1 0 1 1 0		
Volume Module:												
Base Vol:	39	123	703	49	213	39	8	386	35	363	366	48
Growth Adj:	1.07	1.07	1.07	1.07	1.07	1.07	1.07	1.07	1.07	1.07	1.07	1.07
Initial Bse:	42	132	754	53	228	42	9	414	38	389	392	51
Added Vol:	0	0	156	0	0	0	0	139	0	49	66	0
Committed P:	3	9	0	0	17	0	0	0	3	0	0	0
Initial Fut:	45	141	910	53	245	42	9	553	41	438	458	51
User Adj:	1.00	1.00	1.00	1.00	1.00	1.00	1.00	1.00	1.00	1.00	1.00	1.00
PHF Adj:	1.00	1.00	1.00	1.00	1.00	1.00	1.00	1.00	1.00	1.00	1.00	1.00
PHF Volume:	45	141	910	53	245	42	9	553	41	438	458	51
Reduct Vol:	0	0	0	0	0	0	0	0	0	0	0	0
Reduced Vol:	45	141	910	53	245	42	9	553	41	438	458	51
PCE Adj:	1.00	1.00	1.00	1.00	1.00	1.00	1.00	1.00	1.00	1.00	1.00	1.00
MLF Adj:	1.00	1.00	1.00	1.00	1.00	1.00	1.00	1.00	1.00	1.00	1.00	1.00
FinalVolume:	45	141	910	53	245	42	9	553	41	438	458	51
Saturation Flow Module:												
Sat/Lane:	1600	1600	1600	1600	1600	1600	1600	1600	1600	1600	1600	1600
Adjustment:	1.00	1.00	1.00	1.00	1.00	1.00	1.00	1.00	1.00	1.00	1.00	1.00
Lanes:	1.00	0.27	1.73	1.00	1.71	0.29	1.00	1.86	0.14	1.00	1.80	0.20
Final Sat.:	1600	429	2771	1600	2734	466	1600	2981	219	1600	2877	323
Capacity Analysis Module:												
Vol/Sat:	0.03	0.33	0.33	0.03	0.09	0.09	0.01	0.19	0.19	0.27	0.16	0.16
Crit Moves:		****		****				****		****		

Newport Banning Ranch
Year 2016 with Project Bluff Road Alternative - TPO Analysis
AM Peak Hour

Level Of Service Computation Report
ICU 1(Loss as Cycle Length %) Method (Future Volume Alternative)

Intersection #44 Newport Blvd/17th St

Cycle (sec):	120	Critical Vol./Cap.(X):	0.860
Loss Time (sec):	0 (Y+R=4.0 sec)	Average Delay (sec/veh):	xxxxxx
Optimal Cycle:	162	Level Of Service:	D

Street Name:	Newport Boulevard						17th Street					
Approach:	North Bound			South Bound			East Bound			West Bound		
Movement:	L - T - R			L - T - R			L - T - R			L - T - R		
Control:	Protected			Protected			Protected			Protected		
Rights:	Include			Include			Include			Include		
Min. Green:	0	0	0	0	0	0	0	0	0	0	0	0
Lanes:	1 0 3	1 0		2 0 3	0 1		3 0 1	1 0		2 0 3	0 1	
Volume Module:												
Base Vol:	50	1789	209	559	1808	328	759	396	3	142	400	147
Growth Adj:	1.07	1.07	1.07	1.07	1.07	1.07	1.07	1.07	1.07	1.07	1.07	1.07
Initial Bse:	54	1918	224	599	1938	352	814	425	3	152	429	158
Added Vol:	0	58	21	0	18	94	240	55	0	6	22	0
Committed P:	0	47	0	0	53	0	0	0	0	0	0	0
Initial Fut:	54	2023	245	599	2009	446	1054	480	3	158	451	158
User Adj:	1.00	1.00	1.00	1.00	1.00	1.00	1.00	1.00	1.00	1.00	1.00	1.00
PHF Adj:	1.00	1.00	1.00	1.00	1.00	1.00	1.00	1.00	1.00	1.00	1.00	1.00
PHF Volume:	54	2023	245	599	2009	446	1054	480	3	158	451	158
Reduct Vol:	0	0	0	0	0	0	0	0	0	0	0	0
Reduced Vol:	54	2023	245	599	2009	446	1054	480	3	158	451	158
PCE Adj:	1.00	1.00	1.00	1.00	1.00	1.00	1.00	1.00	1.00	1.00	1.00	1.00
MLF Adj:	1.00	1.00	1.00	1.00	1.00	1.00	1.00	1.00	1.00	1.00	1.00	1.00
FinalVolume:	54	2023	245	599	2009	446	1054	480	3	158	451	158
Saturation Flow Module:												
Sat/Lane:	1600	1600	1600	1600	1600	1600	1600	1600	1600	1600	1600	1600
Adjustment:	1.00	1.00	1.00	1.00	1.00	1.00	1.00	1.00	1.00	1.00	1.00	1.00
Lanes:	1.00	3.57	0.43	2.00	3.00	1.00	3.00	1.99	0.01	2.00	3.00	1.00
Final Sat.:	1600	5708	692	3200	4800	1600	4800	3179	21	3200	4800	1600
Capacity Analysis Module:												
Vol/Sat:	0.03	0.35	0.35	0.19	0.42	0.28	0.22	0.15	0.15	0.05	0.09	0.10
Crit Moves:		****		****			****					****

Newport Banning Ranch
Year 2016 with Project Bluff Road Alternative - TPO Analysis
AM Peak Hour

Level Of Service Computation Report
ICU 1(Loss as Cycle Length %) Method (Future Volume Alternative)

Intersection #45 Orange Ave/17th St

Cycle (sec):	100	Critical Vol./Cap.(X):	0.466
Loss Time (sec):	0 (Y+R=4.0 sec)	Average Delay (sec/veh):	xxxxxx
Optimal Cycle:	43	Level Of Service:	A

Street Name:	Orange Avenue						17th Street					
Approach:	North Bound			South Bound			East Bound			West Bound		
Movement:	L - T - R			L - T - R			L - T - R			L - T - R		
Control:	Prot+Permit			Prot+Permit			Prot+Permit			Prot+Permit		
Rights:	Include			Include			Include			Include		
Min. Green:	0	0	0	0	0	0	0	0	0	0	0	0
Lanes:	1 0 1	1 0		1 0 1	0 1		1 0 2	0 1		1 0 2	0 1	
Volume Module:												
Base Vol:	106	188	37	123	141	78	42	766	86	40	692	121
Growth Adj:	1.07	1.07	1.07	1.07	1.07	1.07	1.07	1.07	1.07	1.07	1.07	1.07
Initial Bse:	114	202	40	132	151	84	45	821	92	43	742	130
Added Vol:	0	0	0	0	0	0	0	76	0	0	28	0
Committed P:	0	0	0	0	0	0	0	1	0	1	2	1
Initial Fut:	114	202	40	132	151	84	45	898	92	44	772	131
User Adj:	1.00	1.00	1.00	1.00	1.00	1.00	1.00	1.00	1.00	1.00	1.00	1.00
PHF Adj:	1.00	1.00	1.00	1.00	1.00	1.00	1.00	1.00	1.00	1.00	1.00	1.00
PHF Volume:	114	202	40	132	151	84	45	898	92	44	772	131
Reduct Vol:	0	0	0	0	0	0	0	0	0	0	0	0
Reduced Vol:	114	202	40	132	151	84	45	898	92	44	772	131
PCE Adj:	1.00	1.00	1.00	1.00	1.00	1.00	1.00	1.00	1.00	1.00	1.00	1.00
MLF Adj:	1.00	1.00	1.00	1.00	1.00	1.00	1.00	1.00	1.00	1.00	1.00	1.00
FinalVolume:	114	202	40	132	151	84	45	898	92	44	772	131
Saturation Flow Module:												
Sat/Lane:	1600	1600	1600	1600	1600	1600	1600	1600	1600	1600	1600	1600
Adjustment:	1.00	1.00	1.00	1.00	1.00	1.00	1.00	1.00	1.00	1.00	1.00	1.00
Lanes:	1.00	1.67	0.33	1.00	1.00	1.00	1.00	2.00	1.00	1.00	2.00	1.00
Final Sat.:	1600	2674	526	1600	1600	1600	1600	3200	1600	1600	3200	1600
Capacity Analysis Module:												
Vol/Sat:	0.07	0.08	0.08	0.08	0.09	0.05	0.03	0.28	0.06	0.03	0.24	0.08
Crit Moves:		****		****				****		****		

Newport Banning Ranch
Year 2016 with Project Bluff Road Alternative - TPO Analysis
AM Peak Hour

Level Of Service Computation Report
ICU 1(Loss as Cycle Length %) Method (Future Volume Alternative)

Intersection #46 Santa Ana Ave/17th St

Cycle (sec):	100	Critical Vol./Cap.(X):	0.447
Loss Time (sec):	0 (Y+R=4.0 sec)	Average Delay (sec/veh):	xxxxxx
Optimal Cycle:	34	Level Of Service:	A

Street Name:	Santa Ana Avenue						17th Street					
Approach:	North Bound			South Bound			East Bound			West Bound		
Movement:	L - T - R			L - T - R			L - T - R			L - T - R		
Control:	Permitted			Permitted			Prot+Permit			Prot+Permit		
Rights:	Include			Include			Include			Include		
Min. Green:	0	0	0	0	0	0	0	0	0	0	0	0
Lanes:	1 0 1	0 1		1 0 1	0 1		1 0 2	0 1		1 0 2	0 1	
Volume Module:												
Base Vol:	89	120	70	74	106	62	34	787	41	40	761	58
Growth Adj:	1.07	1.07	1.07	1.07	1.07	1.07	1.07	1.07	1.07	1.07	1.07	1.07
Initial Bse:	95	129	75	79	114	66	36	844	44	43	816	62
Added Vol:	0	0	0	0	0	0	0	76	0	0	28	0
Committed P:	0	0	1	1	0	0	0	3	0	2	8	2
Initial Fut:	95	129	76	80	114	66	36	923	44	45	852	64
User Adj:	1.00	1.00	1.00	1.00	1.00	1.00	1.00	1.00	1.00	1.00	1.00	1.00
PHF Adj:	1.00	1.00	1.00	1.00	1.00	1.00	1.00	1.00	1.00	1.00	1.00	1.00
PHF Volume:	95	129	76	80	114	66	36	923	44	45	852	64
Reduct Vol:	0	0	0	0	0	0	0	0	0	0	0	0
Reduced Vol:	95	129	76	80	114	66	36	923	44	45	852	64
PCE Adj:	1.00	1.00	1.00	1.00	1.00	1.00	1.00	1.00	1.00	1.00	1.00	1.00
MLF Adj:	1.00	1.00	1.00	1.00	1.00	1.00	1.00	1.00	1.00	1.00	1.00	1.00
FinalVolume:	95	129	76	80	114	66	36	923	44	45	852	64
Saturation Flow Module:												
Sat/Lane:	1600	1600	1600	1600	1600	1600	1600	1600	1600	1600	1600	1600
Adjustment:	1.00	1.00	1.00	1.00	1.00	1.00	1.00	1.00	1.00	1.00	1.00	1.00
Lanes:	1.00	1.00	1.00	1.00	1.00	1.00	1.00	2.00	1.00	1.00	2.00	1.00
Final Sat.:	1600	1600	1600	1600	1600	1600	1600	3200	1600	1600	3200	1600
Capacity Analysis Module:												
Vol/Sat:	0.06	0.08	0.05	0.05	0.07	0.04	0.02	0.29	0.03	0.03	0.27	0.04
Crit Moves:	****				****			****		****		

Newport Banning Ranch
Year 2016 with Project Bluff Road Alternative - TPO Analysis
AM Peak Hour

Level Of Service Computation Report
ICU 1(Loss as Cycle Length %) Method (Future Volume Alternative)

Intersection #47 Tustin Ave/17th St

Cycle (sec):	100	Critical Vol./Cap.(X):	0.536
Loss Time (sec):	0 (Y+R=4.0 sec)	Average Delay (sec/veh):	xxxxxx
Optimal Cycle:	40	Level Of Service:	A

Street Name:	Tustin Avenue						17th Street					
Approach:	North Bound			South Bound			East Bound			West Bound		
Movement:	L - T - R			L - T - R			L - T - R			L - T - R		
Control:	Permitted			Permitted			Prot+Permit			Prot+Permit		
Rights:	Include			Include			Include			Include		
Min. Green:	0	0	0	0	0	0	0	0	0	0	0	0
Lanes:	1 0 0 1 0			1 0 1 0 1			1 0 1 1 0			1 0 1 1 0		
Volume Module:												
Base Vol:	94	139	80	48	94	39	36	807	91	40	732	34
Growth Adj:	1.07	1.07	1.07	1.07	1.07	1.07	1.07	1.07	1.07	1.07	1.07	1.07
Initial Bse:	101	149	86	51	101	42	39	865	98	43	785	36
Added Vol:	0	0	0	0	0	0	0	76	0	0	28	0
Committed P:	0	0	2	2	0	0	0	7	0	2	14	2
Initial Fut:	101	149	88	53	101	42	39	948	98	45	827	38
User Adj:	1.00	1.00	1.00	1.00	1.00	1.00	1.00	1.00	1.00	1.00	1.00	1.00
PHF Adj:	1.00	1.00	1.00	1.00	1.00	1.00	1.00	1.00	1.00	1.00	1.00	1.00
PHF Volume:	101	149	88	53	101	42	39	948	98	45	827	38
Reduct Vol:	0	0	0	0	0	0	0	0	0	0	0	0
Reduced Vol:	101	149	88	53	101	42	39	948	98	45	827	38
PCE Adj:	1.00	1.00	1.00	1.00	1.00	1.00	1.00	1.00	1.00	1.00	1.00	1.00
MLF Adj:	1.00	1.00	1.00	1.00	1.00	1.00	1.00	1.00	1.00	1.00	1.00	1.00
FinalVolume:	101	149	88	53	101	42	39	948	98	45	827	38
Saturation Flow Module:												
Sat/Lane:	1600	1600	1600	1600	1600	1600	1600	1600	1600	1600	1600	1600
Adjustment:	1.00	1.00	1.00	1.00	1.00	1.00	1.00	1.00	1.00	1.00	1.00	1.00
Lanes:	1.00	0.63	0.37	1.00	1.00	1.00	1.00	1.81	0.19	1.00	1.91	0.09
Final Sat.:	1600	1007	593	1600	1600	1600	1600	2901	299	1600	3058	142
Capacity Analysis Module:												
Vol/Sat:	0.06	0.15	0.15	0.03	0.06	0.03	0.02	0.33	0.33	0.03	0.27	0.27
Crit Moves:		****		****				****		****		

Newport Banning Ranch
Year 2016 with Project Bluff Road Alternative - TPO Analysis
AM Peak Hour

Level Of Service Computation Report
ICU 1(Loss as Cycle Length %) Method (Future Volume Alternative)

Intersection #48 Irvine Ave/17th St

Cycle (sec):	100	Critical Vol./Cap.(X):	0.551
Loss Time (sec):	0 (Y+R=4.0 sec)	Average Delay (sec/veh):	xxxxxx
Optimal Cycle:	51	Level Of Service:	A

Street Name:	Irvine Avenue						17th Street					
Approach:	North Bound			South Bound			East Bound			West Bound		
Movement:	L - T - R			L - T - R			L - T - R			L - T - R		
Control:	Protected			Protected			Protected			Protected		
Rights:	Include			Include			Include			Include		
Min. Green:	0	0	0	0	0	0	0	0	0	0	0	0
Lanes:	2 0 2	0 1		2 0 2	0 1		2 0 1	1 0		1 0 1	1 0	
Volume Module:												
Base Vol:	274	590	35	203	458	127	209	489	217	33	299	40
Growth Adj:	1.07	1.07	1.07	1.07	1.07	1.07	1.07	1.07	1.07	1.07	1.07	1.07
Initial Bse:	294	632	38	218	491	136	224	524	233	35	321	43
Added Vol:	0	0	0	0	0	0	0	76	0	0	28	0
Committed P:	1	1	0	0	0	6	3	9	1	0	14	0
Initial Fut:	295	633	38	218	491	142	227	609	234	35	363	43
User Adj:	1.00	1.00	1.00	1.00	1.00	1.00	1.00	1.00	1.00	1.00	1.00	1.00
PHF Adj:	1.00	1.00	1.00	1.00	1.00	1.00	1.00	1.00	1.00	1.00	1.00	1.00
PHF Volume:	295	633	38	218	491	142	227	609	234	35	363	43
Reduct Vol:	0	0	0	0	0	0	0	0	0	0	0	0
Reduced Vol:	295	633	38	218	491	142	227	609	234	35	363	43
PCE Adj:	1.00	1.00	1.00	1.00	1.00	1.00	1.00	1.00	1.00	1.00	1.00	1.00
MLF Adj:	1.00	1.00	1.00	1.00	1.00	1.00	1.00	1.00	1.00	1.00	1.00	1.00
FinalVolume:	295	633	38	218	491	142	227	609	234	35	363	43
Saturation Flow Module:												
Sat/Lane:	1600	1600	1600	1600	1600	1600	1600	1600	1600	1600	1600	1600
Adjustment:	1.00	1.00	1.00	1.00	1.00	1.00	1.00	1.00	1.00	1.00	1.00	1.00
Lanes:	2.00	2.00	1.00	2.00	2.00	1.00	2.00	1.45	0.55	1.00	1.79	0.21
Final Sat.:	3200	3200	1600	3200	3200	1600	3200	2313	887	1600	2862	338
Capacity Analysis Module:												
Vol/Sat:	0.09	0.20	0.02	0.07	0.15	0.09	0.07	0.26	0.26	0.02	0.13	0.13
Crit Moves:		****		****				****		****		

Newport Banning Ranch
Year 2016 with Project Bluff Road Alternative - TPO Analysis
AM Peak Hour

Level Of Service Computation Report
ICU 1(Loss as Cycle Length %) Method (Future Volume Alternative)

Intersection #49 Placentia Ave/16th St

Cycle (sec):	100	Critical Vol./Cap.(X):	0.382
Loss Time (sec):	0 (Y+R=4.0 sec)	Average Delay (sec/veh):	xxxxxx
Optimal Cycle:	23	Level Of Service:	A

Street Name:	Placentia Avenue						16th Street					
Approach:	North Bound			South Bound			East Bound			West Bound		
Movement:	L - T - R			L - T - R			L - T - R			L - T - R		
Control:	Permitted			Permitted			Permitted			Permitted		
Rights:	Include			Include			Include			Include		
Min. Green:	0	0	0	0	0	0	0	0	0	0	0	0
Lanes:	1 0 1	1 0		1 0 1	1 0		1 0 0	1 0		1 0 0	1 0	
Volume Module:												
Base Vol:	76	454	36	70	442	88	26	57	31	17	105	35
Growth Adj:	1.07	1.07	1.07	1.07	1.07	1.07	1.07	1.07	1.07	1.07	1.07	1.07
Initial Bse:	81	487	39	75	474	94	28	61	33	18	113	38
Added Vol:	-21	-125	0	0	-44	6	16	176	-8	0	50	0
Committed P:	3	13	3	0	3	0	0	0	0	0	0	0
Initial Fut:	63	375	42	75	433	100	44	237	25	18	163	38
User Adj:	1.00	1.00	1.00	1.00	1.00	1.00	1.00	1.00	1.00	1.00	1.00	1.00
PHF Adj:	1.00	1.00	1.00	1.00	1.00	1.00	1.00	1.00	1.00	1.00	1.00	1.00
PHF Volume:	63	375	42	75	433	100	44	237	25	18	163	38
Reduct Vol:	0	0	0	0	0	0	0	0	0	0	0	0
Reduced Vol:	63	375	42	75	433	100	44	237	25	18	163	38
PCE Adj:	1.00	1.00	1.00	1.00	1.00	1.00	1.00	1.00	1.00	1.00	1.00	1.00
MLF Adj:	1.00	1.00	1.00	1.00	1.00	1.00	1.00	1.00	1.00	1.00	1.00	1.00
FinalVolume:	63	375	42	75	433	100	44	237	25	18	163	38
Saturation Flow Module:												
Sat/Lane:	1600	1600	1600	1600	1600	1600	1600	1600	1600	1600	1600	1600
Adjustment:	1.00	1.00	1.00	1.00	1.00	1.00	1.00	1.00	1.00	1.00	1.00	1.00
Lanes:	1.00	1.80	0.20	1.00	1.62	0.38	1.00	0.90	0.10	1.00	0.81	0.19
Final Sat.:	1600	2880	320	1600	2598	602	1600	1446	154	1600	1300	300
Capacity Analysis Module:												
Vol/Sat:	0.04	0.13	0.13	0.05	0.17	0.17	0.03	0.16	0.16	0.01	0.13	0.13
Crit Moves:	****				****			****		****		

Newport Banning Ranch
Year 2016 with Project Bluff Road Alternative - TPO Analysis
AM Peak Hour

Level Of Service Computation Report
ICU 1(Loss as Cycle Length %) Method (Future Volume Alternative)

Intersection #50 Superior Ave/16th St

Cycle (sec):	100	Critical Vol./Cap.(X):	0.581
Loss Time (sec):	0 (Y+R=4.0 sec)	Average Delay (sec/veh):	xxxxxx
Optimal Cycle:	34	Level Of Service:	A

Street Name:	Superior Avenue						16th Street					
Approach:	North Bound			South Bound			East Bound			West Bound		
Movement:	L - T - R			L - T - R			L - T - R			L - T - R		
Control:	Permitted			Permitted			Permitted			Permitted		
Rights:	Include			Include			Include			Include		
Min. Green:	0	0	0	0	0	0	0	0	0	0	0	0
Lanes:	1 0	2 0	1	1 0	1 1	0	1 0	1 0	0	0 1	0 0	1
Volume Module:												
Base Vol:	25	967	66	41	540	130	23	173	0	15	153	15
Growth Adj:	1.07	1.07	1.07	1.07	1.07	1.07	1.07	1.07	1.07	1.07	1.07	1.07
Initial Bse:	27	1037	71	44	579	139	25	185	0	16	164	16
Added Vol:	0	68	0	0	25	24	89	88	0	0	26	0
Committed P:	0	27	0	0	23	0	0	0	0	0	0	0
Initial Fut:	27	1132	71	44	627	163	114	273	0	16	190	16
User Adj:	1.00	1.00	1.00	1.00	1.00	1.00	1.00	1.00	1.00	1.00	1.00	1.00
PHF Adj:	1.00	1.00	1.00	1.00	1.00	1.00	1.00	1.00	1.00	1.00	1.00	1.00
PHF Volume:	27	1132	71	44	627	163	114	273	0	16	190	16
Reduct Vol:	0	0	0	0	0	0	0	0	0	0	0	0
Reduced Vol:	27	1132	71	44	627	163	114	273	0	16	190	16
PCE Adj:	1.00	1.00	1.00	1.00	1.00	1.00	1.00	1.00	1.00	1.00	1.00	1.00
MLF Adj:	1.00	1.00	1.00	1.00	1.00	1.00	1.00	1.00	1.00	1.00	1.00	1.00
FinalVolume:	27	1132	71	44	627	163	114	273	0	16	190	16
Saturation Flow Module:												
Sat/Lane:	1600	1600	1600	1600	1600	1600	1600	1600	1600	1600	1600	1600
Adjustment:	1.00	1.00	1.00	1.00	1.00	1.00	1.00	1.00	1.00	1.00	1.00	1.00
Lanes:	1.00	2.00	1.00	1.00	1.59	0.41	1.00	1.00	0.00	0.08	0.92	1.00
Final Sat.:	1600	3200	1600	1600	2538	662	1600	1600	0	125	1475	1600
Capacity Analysis Module:												
Vol/Sat:	0.02	0.35	0.04	0.03	0.25	0.25	0.07	0.17	0.00	0.01	0.13	0.01
Crit Moves:		****		****			****				****	

Newport Banning Ranch
Year 2016 with Project Bluff Road Alternative - TPO Analysis
AM Peak Hour

Level Of Service Computation Report
ICU 1(Loss as Cycle Length %) Method (Future Volume Alternative)

Intersection #51 Newport Blvd/16th St

Cycle (sec):	120	Critical Vol./Cap.(X):	0.564
Loss Time (sec):	0 (Y+R=4.0 sec)	Average Delay (sec/veh):	xxxxxx
Optimal Cycle:	43	Level Of Service:	A

Street Name:	Newport Boulevard						16th Street					
Approach:	North Bound			South Bound			East Bound			West Bound		
Movement:	L - T - R			L - T - R			L - T - R			L - T - R		
Control:	Protected			Protected			Permitted			Permitted		
Rights:	Include			Include			Include			Include		
Min. Green:	0	0	0	0	0	0	0	0	0	0	0	0
Lanes:	1 0 2	1 0		1 0 3	0 1		0 0 1!	0 0		0 0 1!	0 0	
Volume Module:												
Base Vol:	8	1539	42	60	1370	49	38	44	13	19	68	77
Growth Adj:	1.07	1.07	1.07	1.07	1.07	1.07	1.07	1.07	1.07	1.07	1.07	1.07
Initial Bse:	9	1650	45	64	1469	53	41	47	14	20	73	83
Added Vol:	0	79	0	0	24	0	0	0	0	0	0	0
Committed P:	2	47	10	0	53	0	0	0	5	12	0	0
Initial Fut:	11	1776	55	64	1546	53	41	47	19	32	73	83
User Adj:	1.00	1.00	1.00	1.00	1.00	1.00	1.00	1.00	1.00	1.00	1.00	1.00
PHF Adj:	1.00	1.00	1.00	1.00	1.00	1.00	1.00	1.00	1.00	1.00	1.00	1.00
PHF Volume:	11	1776	55	64	1546	53	41	47	19	32	73	83
Reduct Vol:	0	0	0	0	0	0	0	0	0	0	0	0
Reduced Vol:	11	1776	55	64	1546	53	41	47	19	32	73	83
PCE Adj:	1.00	1.00	1.00	1.00	1.00	1.00	1.00	1.00	1.00	1.00	1.00	1.00
MLF Adj:	1.00	1.00	1.00	1.00	1.00	1.00	1.00	1.00	1.00	1.00	1.00	1.00
FinalVolume:	11	1776	55	64	1546	53	41	47	19	32	73	83
Saturation Flow Module:												
Sat/Lane:	1600	1600	1600	1600	1600	1600	1600	1600	1600	1600	1600	1600
Adjustment:	1.00	1.00	1.00	1.00	1.00	1.00	1.00	1.00	1.00	1.00	1.00	1.00
Lanes:	1.00	2.91	0.09	1.00	3.00	1.00	0.38	0.44	0.18	0.17	0.39	0.44
Final Sat.:	1600	4656	144	1600	4800	1600	610	706	284	276	621	703
Capacity Analysis Module:												
Vol/Sat:	0.01	0.38	0.38	0.04	0.32	0.03	0.03	0.07	0.07	0.02	0.12	0.12
Crit Moves:		****		****			****				****	

Newport Banning Ranch
Year 2016 with Project Bluff Road Alternative - TPO Analysis
AM Peak Hour

Level Of Service Computation Report
ICU 1(Loss as Cycle Length %) Method (Future Volume Alternative)

Intersection #52 Bluff Rd/Victoria St

Cycle (sec):	100	Critical Vol./Cap.(X):	0.504
Loss Time (sec):	0 (Y+R=4.0 sec)	Average Delay (sec/veh):	xxxxxx
Optimal Cycle:	46	Level Of Service:	A

Street Name:	Bluff Road						Victoria St					
Approach:	North Bound			South Bound			East Bound			West Bound		
Movement:	L - T - R			L - T - R			L - T - R			L - T - R		
Control:	Protected			Protected			Protected			Protected		
Rights:	Include			Include			Include			Include		
Min. Green:	0	0	0	0	0	0	0	0	0	0	0	0
Lanes:	0 0 0 0 0			0 0 0 0 0			0 0 2 0 0			0 0 2 0 0		
Volume Module:												
Base Vol:	0	0	0	0	0	0	0	1505	0	0	749	0
Growth Adj:	1.00	1.00	1.00	1.00	1.00	1.00	1.00	1.07	1.00	1.00	1.07	1.00
Initial Bse:	0	0	0	0	0	0	0	1613	0	0	803	0
Added Vol:	0	0	0	0	0	0	0	0	0	0	1	0
PasserByVol:	0	0	0	0	0	0	0	0	0	0	0	0
Initial Fut:	0	0	0	0	0	0	0	1613	0	0	804	0
User Adj:	1.00	1.00	1.00	1.00	1.00	1.00	1.00	1.00	1.00	1.00	1.00	1.00
PHF Adj:	1.00	1.00	1.00	1.00	1.00	1.00	1.00	1.00	1.00	1.00	1.00	1.00
PHF Volume:	0	0	0	0	0	0	0	1613	0	0	804	0
Reduct Vol:	0	0	0	0	0	0	0	0	0	0	0	0
Reduced Vol:	0	0	0	0	0	0	0	1613	0	0	804	0
PCE Adj:	1.00	1.00	1.00	1.00	1.00	1.00	1.00	1.00	1.00	1.00	1.00	1.00
MLF Adj:	1.00	1.00	1.00	1.00	1.00	1.00	1.00	1.00	1.00	1.00	1.00	1.00
FinalVolume:	0	0	0	0	0	0	0	1613	0	0	804	0
Saturation Flow Module:												
Sat/Lane:	1600	1600	1600	1600	1600	1600	1600	1600	1600	1600	1600	1600
Adjustment:	1.00	1.00	1.00	1.00	1.00	1.00	1.00	1.00	1.00	1.00	1.00	1.00
Lanes:	0.00	0.00	0.00	0.00	0.00	0.00	0.00	2.00	0.00	0.00	2.00	0.00
Final Sat.:	0	0	0	0	0	0	0	3200	0	0	3200	0
Capacity Analysis Module:												
Vol/Sat:	0.00	0.00	0.00	0.00	0.00	0.00	0.00	0.50	0.00	0.00	0.25	0.00
Crit Moves:								****		****		

Newport Banning Ranch
Year 2016 with Project Bluff Road Alternative - TPO Analysis
AM Peak Hour

Level Of Service Computation Report
ICU 1(Loss as Cycle Length %) Method (Future Volume Alternative)

Intersection #53 Bluff Rd/19th St

Cycle (sec): 100 Critical Vol./Cap.(X): 0.000
Loss Time (sec): 0 (Y+R=4.0 sec) Average Delay (sec/veh): xxxxxx
Optimal Cycle: 0 Level Of Service:

Street Name:	Bluff Rd						19th Street					
Approach:	North Bound			South Bound			East Bound			West Bound		
Movement:	L - T - R			L - T - R			L - T - R			L - T - R		
Control:	Permitted			Permitted			Permitted			Permitted		
Rights:	Include			Include			Include			Include		
Min. Green:	0	0	0	0	0	0	0	0	0	0	0	0
Lanes:	0 0 0 0 0			0 0 0 0 0			0 0 0 0 0			0 0 0 0 0		
Volume Module:												
Base Vol:	0	0	0	0	0	0	0	0	0	0	0	0
Growth Adj:	0.00	0.00	0.00	0.00	0.00	0.00	0.00	0.00	0.00	0.00	0.00	0.00
Initial Bse:	0	0	0	0	0	0	0	0	0	0	0	0
Added Vol:	0	0	0	0	0	0	0	0	0	0	0	0
PasserByVol:	0	0	0	0	0	0	0	0	0	0	0	0
Initial Fut:	0	0	0	0	0	0	0	0	0	0	0	0
User Adj:	0.00	0.00	0.00	0.00	0.00	0.00	0.00	0.00	0.00	0.00	0.00	0.00
PHF Adj:	0.00	0.00	0.00	0.00	0.00	0.00	0.00	0.00	0.00	0.00	0.00	0.00
PHF Volume:	0	0	0	0	0	0	0	0	0	0	0	0
Reduct Vol:	0	0	0	0	0	0	0	0	0	0	0	0
Reduced Vol:	0	0	0	0	0	0	0	0	0	0	0	0
PCE Adj:	0.00	0.00	0.00	0.00	0.00	0.00	0.00	0.00	0.00	0.00	0.00	0.00
MLF Adj:	0.00	0.00	0.00	0.00	0.00	0.00	0.00	0.00	0.00	0.00	0.00	0.00
FinalVolume:	0	0	0	0	0	0	0	0	0	0	0	0
Saturation Flow Module:												
Sat/Lane:	0	0	0	0	0	0	0	0	0	0	0	0
Adjustment:	1.00	1.00	1.00	1.00	1.00	1.00	1.00	1.00	1.00	1.00	1.00	1.00
Lanes:	0.00	0.00	0.00	0.00	0.00	0.00	0.00	0.00	0.00	0.00	0.00	0.00
Final Sat.:	0	0	0	0	0	0	0	0	0	0	0	0
Capacity Analysis Module:												
Vol/Sat:	0.00	0.00	0.00	0.00	0.00	0.00	0.00	0.00	0.00	0.00	0.00	0.00
Crit Moves:												

Newport Banning Ranch
Year 2016 with Project Bluff Road Alternative - TPO Analysis
AM Peak Hour

Level Of Service Computation Report
ICU 1(Loss as Cycle Length %) Method (Future Volume Alternative)

Intersection #54 Bluff Rd/17th St

Cycle (sec):	100	Critical Vol./Cap.(X):	0.140
Loss Time (sec):	0 (Y+R=4.0 sec)	Average Delay (sec/veh):	xxxxxx
Optimal Cycle:	17	Level Of Service:	A

Street Name:	Bluff Road						17th Street					
Approach:	North Bound			South Bound			East Bound			West Bound		
Movement:	L - T - R			L - T - R			L - T - R			L - T - R		
Control:	Permitted			Permitted			Permitted			Permitted		
Rights:	Include			Include			Include			Include		
Min. Green:	0	0	0	0	0	0	0	0	0	0	0	0
Lanes:	1 0 1	1 0		1 0 0	1 0		0 0 1	0 0		1 0 1	0 1	
Volume Module:												
Base Vol:	0	0	0	0	0	0	0	0	0	0	0	0
Growth Adj:	1.00	1.00	1.00	1.00	1.00	1.00	1.00	1.00	1.00	1.00	1.00	1.00
Initial Bse:	0	0	0	0	0	0	0	0	0	0	0	0
Added Vol:	0	15	139	0	36	0	0	18	0	67	5	0
PasserByVol:	0	0	0	0	0	0	0	0	0	0	0	0
Initial Fut:	0	15	139	0	36	0	0	18	0	67	5	0
User Adj:	1.00	1.00	1.00	1.00	1.00	1.00	1.00	1.00	1.00	1.00	1.00	1.00
PHF Adj:	1.00	1.00	1.00	1.00	1.00	1.00	1.00	1.00	1.00	1.00	1.00	1.00
PHF Volume:	0	15	139	0	36	0	0	18	0	67	5	0
Reduct Vol:	0	0	0	0	0	0	0	0	0	0	0	0
Reduced Vol:	0	15	139	0	36	0	0	18	0	67	5	0
PCE Adj:	1.00	1.00	1.00	1.00	1.00	1.00	1.00	1.00	1.00	1.00	1.00	1.00
MLF Adj:	1.00	1.00	1.00	1.00	1.00	1.00	1.00	1.00	1.00	1.00	1.00	1.00
FinalVolume:	0	15	139	0	36	0	0	18	0	67	5	0
Saturation Flow Module:												
Sat/Lane:	1600	1600	1600	1600	1600	1600	1600	1600	1600	1600	1600	1600
Adjustment:	1.00	1.00	1.00	1.00	1.00	1.00	1.00	1.00	1.00	1.00	1.00	1.00
Lanes:	1.00	1.00	1.00	1.00	1.00	0.00	0.00	1.00	0.00	1.00	1.00	1.00
Final Sat.:	1600	1600	1600	1600	1600	0	0	1600	0	1600	1600	1600
Capacity Analysis Module:												
Vol/Sat:	0.00	0.01	0.09	0.00	0.02	0.00	0.00	0.01	0.00	0.04	0.00	0.00
Crit Moves:			****	****				****		****		

Newport Banning Ranch
Year 2016 with Project Bluff Road Alternative - TPO Analysis
AM Peak Hour

Level Of Service Computation Report
2000 HCM Unsignalized Method (Future Volume Alternative)

Intersection #55 Bluff Rd/16th St

Average Delay (sec/veh): 4.0 Worst Case Level Of Service: B[14.6]

Street Name:	Bluff Road								16th Street							
Approach:	North Bound				South Bound				East Bound				West Bound			
Movement:	L	-	T	- R	L	-	T	- R	L	-	T	- R	L	-	T	- R
Control:	Uncontrolled				Uncontrolled				Stop Sign				Stop Sign			
Rights:	Include				Include				Include				Include			
Lanes:	1 0	1	1	0	1 0	1	1	0	0 0	0	1	0	0 0	1!	0	0
Volume Module:																
Base Vol:	0	0	0		0	0	0		0	0	0		0	0	0	
Growth Adj:	1.00	1.00	1.00		1.00	1.00	1.00		1.00	1.00	1.00		1.00	1.00	1.00	
Initial Bse:	0	0	0		0	0	0		0	0	0		0	0	0	
Added Vol:	7	189	67		136	201	0		0	32	23		24	10	37	
PasserByVol:	0	0	0		0	0	0		0	0	0		0	0	0	
Initial Fut:	7	189	67		136	201	0		0	32	23		24	10	37	
User Adj:	1.00	1.00	1.00		1.00	1.00	1.00		1.00	1.00	1.00		1.00	1.00	1.00	
PHF Adj:	1.00	1.00	1.00		1.00	1.00	1.00		1.00	1.00	1.00		1.00	1.00	1.00	
PHF Volume:	7	189	67		136	201	0		0	32	23		24	10	37	
Reduct Vol:	0	0	0		0	0	0		0	0	0		0	0	0	
FinalVolume:	7	189	67		136	201	0		0	32	23		24	10	37	
Critical Gap Module:																
Critical Gp:	4.1	xxxx	xxxxx		4.1	xxxx	xxxxx	xxxxx	6.5	6.9	7.5		6.5	6.9		
FollowUpTim:	2.2	xxxx	xxxxx		2.2	xxxx	xxxxx	xxxxx	4.0	3.3	3.5		4.0	3.3		
Capacity Module:																
Cnflict Vol:	201	xxxx	xxxxx		256	xxxx	xxxxx	xxxx	743	101	625		710	128		
Potent Cap.:	1383	xxxx	xxxxx		1321	xxxx	xxxxx	xxxx	346	942	373		361	905		
Move Cap.:	1383	xxxx	xxxxx		1321	xxxx	xxxxx	xxxx	308	942	308		322	905		
Volume/Cap:	0.01	xxxx	xxxx		0.10	xxxx	xxxx	xxxx	0.10	0.02	0.08		0.03	0.04		
Level Of Service Module:																
2Way95thQ:	0.0	xxxx	xxxxx		0.3	xxxx	xxxxx	xxxx	xxxx	xxxxx	xxxx		xxxx	xxxxx		
Control Del:	7.6	xxxx	xxxxx		8.0	xxxx	xxxxx	xxxxx	xxxx	xxxxx	xxxxx		xxxx	xxxxx		
LOS by Move:	A	*	*		A	*	*	*	*	*	*		*	*		
Movement:	LT	-	LTR	- RT	LT	-	LTR	- RT	LT	-	LTR	- RT	LT	-	LTR	- RT
Shared Cap.:	xxxx	xxxx	xxxxx		xxxx	xxxx	xxxxx		xxxx	xxxx	429		xxxx	474	xxxxx	
SharedQueue:	xxxxx	xxxx	xxxxx		xxxxx	xxxx	xxxxx		xxxxx	xxxx	0.4		xxxxx	0.5	xxxxx	
Shrd ConDel:	xxxxx	xxxx	xxxxx		xxxxx	xxxx	xxxxx		xxxxx	xxxx	14.6		xxxxx	13.9	xxxxx	
Shared LOS:	*	*	*		*	*	*		*	*	B		*	B	*	
ApproachDel:	xxxxxx				xxxxxx				14.6				13.9			
ApproachLOS:	*				*				B				B			

Note: Queue reported is the number of cars per lane.

Newport Banning Ranch
Year 2016 with Project Bluff Road Alternative - TPO Analysis
AM Peak Hour

Level Of Service Computation Report
ICU 1(Loss as Cycle Length %) Method (Future Volume Alternative)

Intersection #56 Bluff Rd/15th St

Cycle (sec):	100	Critical Vol./Cap.(X):	0.180
Loss Time (sec):	0 (Y+R=4.0 sec)	Average Delay (sec/veh):	xxxxxx
Optimal Cycle:	23	Level Of Service:	A

Street Name:	Bluff Road						15th Street					
Approach:	North Bound			South Bound			East Bound			West Bound		
Movement:	L - T - R			L - T - R			L - T - R			L - T - R		
Control:	Split Phase			Split Phase			Permitted			Permitted		
Rights:	Include			Include			Include			Include		
Min. Green:	0	0	0	0	0	0	0	0	0	0	0	0
Lanes:	0 0 0 0 0			1 0 0 0 2			2 0 2 0 0			0 0 2 1 0		
Volume Module:												
Base Vol:	0	0	0	0	0	0	0	0	0	0	0	0
Growth Adj:	1.00	1.00	1.00	1.00	1.00	1.00	1.00	1.00	1.00	1.00	1.00	1.00
Initial Bse:	0	0	0	0	0	0	0	0	0	0	0	0
Added Vol:	0	0	0	46	0	247	262	236	0	0	88	14
PasserByVol:	0	0	0	0	0	0	0	0	0	0	0	0
Initial Fut:	0	0	0	46	0	247	262	236	0	0	88	14
User Adj:	1.00	1.00	1.00	1.00	1.00	1.00	1.00	1.00	1.00	1.00	1.00	1.00
PHF Adj:	1.00	1.00	1.00	1.00	1.00	1.00	1.00	1.00	1.00	1.00	1.00	1.00
PHF Volume:	0	0	0	46	0	247	262	236	0	0	88	14
Reduct Vol:	0	0	0	0	0	0	0	0	0	0	0	0
Reduced Vol:	0	0	0	46	0	247	262	236	0	0	88	14
PCE Adj:	1.00	1.00	1.00	1.00	1.00	1.00	1.00	1.00	1.00	1.00	1.00	1.00
MLF Adj:	1.00	1.00	1.00	1.00	1.00	1.00	1.00	1.00	1.00	1.00	1.00	1.00
FinalVolume:	0	0	0	46	0	247	262	236	0	0	88	14
Saturation Flow Module:												
Sat/Lane:	1600	1600	1600	1600	1600	1600	1600	1600	1600	1600	1600	1600
Adjustment:	1.00	1.00	1.00	1.00	1.00	1.00	1.00	1.00	1.00	1.00	1.00	1.00
Lanes:	0.00	0.00	0.00	1.00	0.00	2.00	2.00	2.00	0.00	0.00	2.59	0.41
Final Sat.:	0	0	0	1600	0	3200	3200	3200	0	0	4141	659
Capacity Analysis Module:												
Vol/Sat:	0.00	0.00	0.00	0.03	0.00	0.08	0.08	0.07	0.00	0.00	0.02	0.02
Crit Moves:						****	****				****	

Newport Banning Ranch
Year 2016 with Project Bluff Road Alternative - TPO Analysis
AM Peak Hour

Level Of Service Computation Report
ICU 1(Loss as Cycle Length %) Method (Future Volume Alternative)

Intersection #57 Bluff Rd/W. Coast Hwy

Cycle (sec):	120	Critical Vol./Cap.(X):	0.648
Loss Time (sec):	0 (Y+R=4.0 sec)	Average Delay (sec/veh):	xxxxxx
Optimal Cycle:	65	Level Of Service:	B

Street Name:	Bluff Road						W. Coast Highway					
Approach:	North Bound			South Bound			East Bound			West Bound		
Movement:	L - T - R			L - T - R			L - T - R			L - T - R		
Control:	Split Phase			Split Phase			Protected			Protected		
Rights:	Include			Include			Include			Include		
Min. Green:	0	0	0	0	0	0	0	0	0	0	0	0
Lanes:	0 0 0 0 0			2 0 0 0 2			2 0 3 0 0			0 0 3 0 1		
Volume Module:												
Base Vol:	0	0	0	0	0	0	0	2834	0	0	1183	0
Growth Adj:	1.00	1.00	1.00	1.00	1.00	1.00	1.00	1.07	1.00	1.00	1.07	1.00
Initial Bse:	0	0	0	0	0	0	0	3038	0	0	1268	0
Added Vol:	0	0	0	108	0	269	385	-329	0	0	-118	42
PasserByVol:	0	0	0	0	0	0	0	0	0	0	0	0
Initial Fut:	0	0	0	108	0	269	385	2709	0	0	1150	42
User Adj:	1.00	1.00	1.00	1.00	1.00	1.00	1.00	1.00	1.00	1.00	1.00	1.00
PHF Adj:	1.00	1.00	1.00	1.00	1.00	1.00	1.00	1.00	1.00	1.00	1.00	1.00
PHF Volume:	0	0	0	108	0	269	385	2709	0	0	1150	42
Reduct Vol:	0	0	0	0	0	0	0	0	0	0	0	0
Reduced Vol:	0	0	0	108	0	269	385	2709	0	0	1150	42
PCE Adj:	1.00	1.00	1.00	1.00	1.00	1.00	1.00	1.00	1.00	1.00	1.00	1.00
MLF Adj:	1.00	1.00	1.00	1.00	1.00	1.00	1.00	1.00	1.00	1.00	1.00	1.00
FinalVolume:	0	0	0	108	0	269	385	2709	0	0	1150	42
Saturation Flow Module:												
Sat/Lane:	1600	1600	1600	1600	1600	1600	1600	1600	1600	1600	1600	1600
Adjustment:	1.00	1.00	1.00	1.00	1.00	1.00	1.00	1.00	1.00	1.00	1.00	1.00
Lanes:	0.00	0.00	0.00	2.00	0.00	2.00	2.00	3.00	0.00	0.00	3.00	1.00
Final Sat.:	0	0	0	3200	0	3200	3200	4800	0	0	4800	1600
Capacity Analysis Module:												
Vol/Sat:	0.00	0.00	0.00	0.03	0.00	0.08	0.12	0.56	0.00	0.00	0.24	0.03
Crit Moves:						****		****		****		

Newport Banning Ranch
Year 2016 with Project Bluff Road Alternative - TPO Analysis
AM Peak Hour

Level Of Service Computation Report
2000 HCM 4-Way Stop Method (Future Volume Alternative)

Intersection #58 Monrovia Ave/15th Street

Cycle (sec):	100	Critical Vol./Cap.(X):	0.359
Loss Time (sec):	0 (Y+R=4.0 sec)	Average Delay (sec/veh):	9.2
Optimal Cycle:	0	Level Of Service:	A

Street Name:	Monrovia Ave						15th Street					
Approach:	North Bound			South Bound			East Bound			West Bound		
Movement:	L - T - R			L - T - R			L - T - R			L - T - R		
Control:	Stop Sign			Stop Sign			Stop Sign			Stop Sign		
Rights:	Include			Include			Include			Include		
Min. Green:	0	0	0	0	0	0	0	0	0	0	0	0
Lanes:	0 0 0 1 0			0 0 1! 0 0			0 1 0 0 0			0 0 1! 0 0		
Volume Module: >> Count Date: 4 May 2011 << Existing AM Peak Hour												
Base Vol:	0	6	11	113	3	1	1	0	0	5	2	82
Growth Adj:	1.00	1.00	1.00	1.00	1.00	1.00	1.00	1.00	1.00	1.00	1.00	1.00
Initial Bse:	0	6	11	113	3	1	1	0	0	5	2	82
Added Vol:	0	0	0	-8	0	19	53	229	0	0	83	-21
PasserByVol:	0	0	0	0	0	0	0	0	0	0	0	0
Initial Fut:	0	6	11	105	3	20	54	229	0	5	85	61
User Adj:	1.00	1.00	1.00	1.00	1.00	1.00	1.00	1.00	1.00	1.00	1.00	1.00
PHF Adj:	1.00	1.00	1.00	1.00	1.00	1.00	1.00	1.00	1.00	1.00	1.00	1.00
PHF Volume:	0	6	11	105	3	20	54	229	0	5	85	61
Reduct Vol:	0	0	0	0	0	0	0	0	0	0	0	0
Reduced Vol:	0	6	11	105	3	20	54	229	0	5	85	61
PCE Adj:	1.00	1.00	1.00	1.00	1.00	1.00	1.00	1.00	1.00	1.00	1.00	1.00
MLF Adj:	1.00	1.00	1.00	1.00	1.00	1.00	1.00	1.00	1.00	1.00	1.00	1.00
FinalVolume:	0	6	11	105	3	20	54	229	0	5	85	61
Saturation Flow Module:												
Adjustment:	1.00	1.00	1.00	1.00	1.00	1.00	1.00	1.00	1.00	1.00	1.00	1.00
Lanes:	0.00	0.35	0.65	0.82	0.02	0.16	0.19	0.81	0.00	0.03	0.57	0.40
Final Sat.:	0	249	457	561	16	107	150	637	0	27	451	324
Capacity Analysis Module:												
Vol/Sat:	xxxx	0.02	0.02	0.19	0.19	0.19	0.36	0.36	xxxx	0.19	0.19	0.19
Crit Moves:		****		****				****			****	
Delay/Veh:	0.0	7.7	7.7	9.0	9.0	9.0	9.8	9.8	0.0	8.3	8.3	8.3
Delay Adj:	1.00	1.00	1.00	1.00	1.00	1.00	1.00	1.00	1.00	1.00	1.00	1.00
AdjDel/Veh:	0.0	7.7	7.7	9.0	9.0	9.0	9.8	9.8	0.0	8.3	8.3	8.3
LOS by Move:	*	A	A	A	A	A	A	A	*	A	A	A
ApproachDel:		7.7			9.0			9.8			8.3	
Delay Adj:		1.00			1.00			1.00			1.00	
ApprAdjDel:		7.7			9.0			9.8			8.3	
LOS by Appr:		A			A			A			A	
AllWayAvgQ:	0.0	0.0	0.0	0.2	0.2	0.2	0.5	0.5	0.5	0.2	0.2	0.2

Newport Banning Ranch
Year 2016 with Project Bluff Road Alternative - TPO Analysis
AM Peak Hour

Note: Queue reported is the number of cars per lane.

Newport Banning Ranch
Year 2016 with Project Bluff Road Alternative - TPO Analysis
AM Peak Hour

Level Of Service Computation Report
ICU 1(Loss as Cycle Length %) Method (Future Volume Alternative)

Intersection #100 Pomona Ave/16th St

Cycle (sec):	100	Critical Vol./Cap.(X):	0.027
Loss Time (sec):	0 (Y+R=4.0 sec)	Average Delay (sec/veh):	xxxxxx
Optimal Cycle:	15	Level Of Service:	A

Street Name:	Pomona Avenue						16th Street					
Approach:	North Bound			South Bound			East Bound			West Bound		
Movement:	L - T - R			L - T - R			L - T - R			L - T - R		
Control:	Permitted			Permitted			Permitted			Permitted		
Rights:	Include			Include			Include			Include		
Min. Green:	0	0	0	0	0	0	0	0	0	0	0	0
Lanes:	0 0 0 0 0			1 0 0 1 0			1 0 0 1 0			0 0 0 1 0		
Volume Module:												
Base Vol:	0	0	0	37	30	11	0	-200	0	0	-200	0
Growth Adj:	1.07	1.07	1.07	1.07	1.07	1.07	1.07	1.07	1.07	1.07	1.07	1.07
Initial Bse:	0	0	0	40	32	12	0	-214	0	0	-214	0
Added Vol:	0	0	0	0	0	0	0	176	0	0	50	0
PasserByVol:	0	0	0	0	0	0	0	0	0	0	0	0
Initial Fut:	0	0	0	40	32	12	0	-38	0	0	-164	0
User Adj:	1.00	1.00	1.00	1.00	1.00	1.00	1.00	0.00	1.00	1.00	0.00	1.00
PHF Adj:	1.00	1.00	1.00	1.00	1.00	1.00	1.00	0.00	1.00	1.00	0.00	1.00
PHF Volume:	0	0	0	40	32	12	0	0	0	0	0	0
Reduct Vol:	0	0	0	0	0	0	0	0	0	0	0	0
Reduced Vol:	0	0	0	40	32	12	0	0	0	0	0	0
PCE Adj:	1.00	1.00	1.00	1.00	1.00	1.00	1.00	0.00	1.00	1.00	0.00	1.00
MLF Adj:	1.00	1.00	1.00	1.00	1.00	1.00	1.00	0.00	1.00	1.00	0.00	1.00
FinalVolume:	0	0	0	40	32	12	0	0	0	0	0	0
Saturation Flow Module:												
Sat/Lane:	1600	1600	1600	1600	1600	1600	1600	1600	1600	1600	1600	1600
Adjustment:	1.00	1.00	1.00	1.00	1.00	1.00	1.00	1.00	1.00	1.00	1.00	1.00
Lanes:	0.00	0.00	0.00	1.00	0.73	0.27	1.00	1.00	0.00	0.00	1.00	0.00
Final Sat.:	0	0	0	1600	1171	429	1600	1600	0	0	1600	0
Capacity Analysis Module:												
Vol/Sat:	0.00	0.00	0.00	0.02	0.03	0.03	0.00	0.00	0.00	0.00	0.00	0.00
Crit Moves:					****							

Newport Banning Ranch
Year 2016 with Project Bluff Road Alternative - TPO Analysis
PM Peak Hour

Scenario Report

Scenario:	TPO 2016 w/ Proj Alt PM ICU
Command:	TPO 2016 w/ Proj Alt PM ICU
Volume:	Existing+Commited PM
Geometry:	2016 Bluff to 17th ICU
Impact Fee:	Default Impact Fee
Trip Generation:	Proposed Project PM
Trip Distribution:	Project
Paths:	Bluff to 17th
Routes:	Default Route
Configuration:	2016 ICU

Newport Banning Ranch
Year 2016 with Project Bluff Road Alternative - TPO Analysis
PM Peak Hour

Level Of Service Computation Report
2000 HCM 4-Way Stop Method (Future Volume Alternative)

Intersection #1 Monrovia Ave/16th St

Cycle (sec):	100	Critical Vol./Cap.(X):	0.395
Loss Time (sec):	0 (Y+R=4.0 sec)	Average Delay (sec/veh):	10.5
Optimal Cycle:	0	Level Of Service:	B

Street Name:	Monrovia Avenue						16th Street					
Approach:	North Bound			South Bound			East Bound			West Bound		
Movement:	L -	T -	R	L -	T -	R	L -	T -	R	L -	T -	R
Control:	Stop Sign			Stop Sign			Stop Sign			Stop Sign		
Rights:	Include			Include			Include			Include		
Min. Green:	0	0	0	0	0	0	0	0	0	0	0	0
Lanes:	0 0	1! 0	0	0 0	1! 0	0	0 0	1! 0	0	0 0	1! 0	0
Volume Module:												
Base Vol:	8	73	23	29	95	17	37	70	21	18	23	31
Growth Adj:	1.00	1.00	1.00	1.00	1.00	1.00	1.00	1.00	1.00	1.00	1.00	1.00
Initial Bse:	8	73	23	29	95	17	37	70	21	18	23	31
Added Vol:	0	12	0	-21	32	42	16	109	0	0	206	-8
Committed P:	0	0	0	0	0	0	0	0	0	0	0	0
Initial Fut:	8	85	23	8	127	59	53	179	21	18	229	23
User Adj:	1.00	1.00	1.00	1.00	1.00	1.00	1.00	1.00	1.00	1.00	1.00	1.00
PHF Adj:	1.00	1.00	1.00	1.00	1.00	1.00	1.00	1.00	1.00	1.00	1.00	1.00
PHF Volume:	8	85	23	8	127	59	53	179	21	18	229	23
Reduct Vol:	0	0	0	0	0	0	0	0	0	0	0	0
Reduced Vol:	8	85	23	8	127	59	53	179	21	18	229	23
PCE Adj:	1.00	1.00	1.00	1.00	1.00	1.00	1.00	1.00	1.00	1.00	1.00	1.00
MLF Adj:	1.00	1.00	1.00	1.00	1.00	1.00	1.00	1.00	1.00	1.00	1.00	1.00
FinalVolume:	8	85	23	8	127	59	53	179	21	18	229	23
Saturation Flow Module:												
Adjustment:	1.00	1.00	1.00	1.00	1.00	1.00	1.00	1.00	1.00	1.00	1.00	1.00
Lanes:	0.07	0.73	0.20	0.04	0.66	0.30	0.21	0.71	0.08	0.07	0.85	0.08
Final Sat.:	42	445	120	26	420	195	142	479	56	46	580	58
Capacity Analysis Module:												
Vol/Sat:	0.19	0.19	0.19	0.30	0.30	0.30	0.37	0.37	0.37	0.39	0.39	0.39
Crit Moves:		****				****		****			****	
Delay/Veh:	9.5	9.5	9.5	10.2	10.2	10.2	10.8	10.8	10.8	11.0	11.0	11.0
Delay Adj:	1.00	1.00	1.00	1.00	1.00	1.00	1.00	1.00	1.00	1.00	1.00	1.00
AdjDel/Veh:	9.5	9.5	9.5	10.2	10.2	10.2	10.8	10.8	10.8	11.0	11.0	11.0
LOS by Move:	A	A	A	B	B	B	B	B	B	B	B	B
ApproachDel:		9.5			10.2			10.8			11.0	
Delay Adj:		1.00			1.00			1.00			1.00	
ApprAdjDel:		9.5			10.2			10.8			11.0	
LOS by Appr:		A			B			B			B	
AllWayAvgQ:	0.2	0.2	0.2	0.4	0.4	0.4	0.5	0.5	0.5	0.6	0.6	0.6

Newport Banning Ranch
Year 2016 with Project Bluff Road Alternative - TPO Analysis
PM Peak Hour

Note: Queue reported is the number of cars per lane.
****

Newport Banning Ranch
Year 2016 with Project Bluff Road Alternative - TPO Analysis
PM Peak Hour

Level Of Service Computation Report
ICU 1(Loss as Cycle Length %) Method (Future Volume Alternative)

Intersection #2 Placentia Ave/15th St

Cycle (sec):	100	Critical Vol./Cap.(X):	0.490
Loss Time (sec):	0 (Y+R=4.0 sec)	Average Delay (sec/veh):	xxxxxx
Optimal Cycle:	45	Level Of Service:	A

Street Name:	Placentia Ave						15th Street					
Approach:	North Bound			South Bound			East Bound			West Bound		
Movement:	L - T - R			L - T - R			L - T - R			L - T - R		
Control:	Prot+Permit			Prot+Permit			Split Phase			Split Phase		
Rights:	Include			Include			Include			Include		
Min. Green:	0	0	0	0	0	0	0	0	0	0	0	0
Lanes:	1 0 1	1 0		1 0 1	1 0		0 0 1!	0 0		0 1 0	0 1	
Volume Module:												
Base Vol:	71	440	17	14	394	30	27	23	132	10	48	84
Growth Adj:	1.00	1.00	1.00	1.00	1.00	1.00	1.00	1.00	1.00	1.00	1.00	1.00
Initial Bse:	71	440	17	14	394	30	27	23	132	10	48	84
Added Vol:	147	-64	0	0	-168	25	13	0	97	0	70	0
Committed P:	0	32	0	0	12	0	0	0	0	0	0	0
Initial Fut:	218	408	17	14	238	55	40	23	229	10	118	84
User Adj:	1.00	1.00	1.00	1.00	1.00	1.00	1.00	1.00	1.00	1.00	1.00	1.00
PHF Adj:	1.00	1.00	1.00	1.00	1.00	1.00	1.00	1.00	1.00	1.00	1.00	1.00
PHF Volume:	218	408	17	14	238	55	40	23	229	10	118	84
Reduct Vol:	0	0	0	0	0	0	0	0	0	0	0	0
Reduced Vol:	218	408	17	14	238	55	40	23	229	10	118	84
PCE Adj:	1.00	1.00	1.00	1.00	1.00	1.00	1.00	1.00	1.00	1.00	1.00	1.00
MLF Adj:	1.00	1.00	1.00	1.00	1.00	1.00	1.00	1.00	1.00	1.00	1.00	1.00
FinalVolume:	218	408	17	14	238	55	40	23	229	10	118	84
Saturation Flow Module:												
Sat/Lane:	1600	1600	1600	1600	1600	1600	1600	1600	1600	1600	1600	1600
Adjustment:	1.00	1.00	1.00	1.00	1.00	1.00	1.00	1.00	1.00	1.00	1.00	1.00
Lanes:	1.00	1.92	0.08	1.00	1.62	0.38	0.14	0.08	0.78	0.08	0.92	1.00
Final Sat.:	1600	3072	128	1600	2599	601	219	126	1255	125	1475	1600
Capacity Analysis Module:												
Vol/Sat:	0.14	0.13	0.13	0.01	0.09	0.09	0.18	0.18	0.18	0.08	0.08	0.05
Crit Moves:	****				****		****				****	

Newport Banning Ranch
Year 2016 with Project Bluff Road Alternative - TPO Analysis
PM Peak Hour

Level Of Service Computation Report
2000 HCM Unsignalized Method (Future Volume Alternative)

Intersection #3 Superior Ave/15th St

Average Delay (sec/veh): 1.2 Worst Case Level Of Service: D[32.1]

Street Name:	Superior Avenue						15th Street					
Approach:	North Bound			South Bound			East Bound			West Bound		
Movement:	L - T - R			L - T - R			L - T - R			L - T - R		
Control:	Uncontrolled			Uncontrolled			Stop Sign			Stop Sign		
Rights:	Include			Include			Include			Include		
Lanes:	1 0 2 0 0			0 0 1 1 0			1 0 0 0 1			0 0 0 0 0		
Volume Module:												
Base Vol:	35	593	0	0	786	92	35	0	24	0	0	0
Growth Adj:	1.00	1.00	1.00	1.00	1.00	1.00	1.00	1.00	1.00	1.00	1.00	1.00
Initial Bse:	35	593	0	0	786	92	35	0	24	0	0	0
Added Vol:	0	68	0	0	15	70	0	0	0	0	0	0
Committed P:	0	40	0	0	124	0	0	0	0	0	0	0
Initial Fut:	35	701	0	0	925	162	35	0	24	0	0	0
User Adj:	1.00	1.00	1.00	1.00	1.00	1.00	1.00	1.00	1.00	1.00	1.00	1.00
PHF Adj:	1.00	1.00	1.00	1.00	1.00	1.00	1.00	1.00	1.00	1.00	1.00	1.00
PHF Volume:	35	701	0	0	925	162	35	0	24	0	0	0
Reduct Vol:	0	0	0	0	0	0	0	0	0	0	0	0
FinalVolume:	35	701	0	0	925	162	35	0	24	0	0	0
Critical Gap Module:												
Critical Gp:	4.1	xxxx	xxxxx	xxxxx	xxxx	xxxxx	6.8	xxxx	6.9	xxxxx	xxxx	xxxxx
FollowUpTim:	2.2	xxxx	xxxxx	xxxxx	xxxx	xxxxx	3.5	xxxx	3.3	xxxxx	xxxx	xxxxx
Capacity Module:												
Cnflict Vol:	1087	xxxx	xxxxx	xxxx	xxxx	xxxxx	1427	xxxx	544	xxxx	xxxx	xxxxx
Potent Cap.:	649	xxxx	xxxxx	xxxx	xxxx	xxxxx	129	xxxx	489	xxxx	xxxx	xxxxx
Move Cap.:	649	xxxx	xxxxx	xxxx	xxxx	xxxxx	123	xxxx	489	xxxx	xxxx	xxxxx
Volume/Cap:	0.05	xxxx	xxxx	xxxx	xxxx	xxxx	0.28	xxxx	0.05	xxxx	xxxx	xxxx
Level Of Service Module:												
2Way95thQ:	0.2	xxxx	xxxxx	xxxx	xxxx	xxxxx	1.1	xxxx	0.2	xxxx	xxxx	xxxxx
Control Del:	10.9	xxxx	xxxxx	xxxxx	xxxx	xxxxx	45.4	xxxx	12.7	xxxxx	xxxx	xxxxx
LOS by Move:	B	*	*	*	*	*	E	*	B	*	*	*
Movement:	LT - LTR - RT			LT - LTR - RT			LT - LTR - RT			LT - LTR - RT		
Shared Cap.:	xxxx	xxxx	xxxxx	xxxx	xxxx	xxxxx	xxxx	xxxx	xxxxx	xxxx	xxxx	xxxxx
SharedQueue:	xxxxx	xxxx	xxxxx	xxxxx	xxxx	xxxxx	xxxxx	xxxx	xxxxx	xxxxx	xxxx	xxxxx
Shrd ConDel:	xxxxx	xxxx	xxxxx	xxxxx	xxxx	xxxxx	xxxxx	xxxx	xxxxx	xxxxx	xxxx	xxxxx
Shared LOS:	*	*	*	*	*	*	*	*	*	*	*	*
ApproachDel:	xxxxxx			xxxxxx			32.1			xxxxxx		
ApproachLOS:	*			*			D			*		

Note: Queue reported is the number of cars per lane.

Newport Banning Ranch
Year 2016 with Project Bluff Road Alternative - TPO Analysis
PM Peak Hour

Level Of Service Computation Report
ICU 1(Loss as Cycle Length %) Method (Future Volume Alternative)

Intersection #4 Superior Ave/Placentia Ave

Cycle (sec):	100	Critical Vol./Cap.(X):	0.554
Loss Time (sec):	0 (Y+R=4.0 sec)	Average Delay (sec/veh):	xxxxxx
Optimal Cycle:	42	Level Of Service:	A

Street Name:	Superior Avenue						Placentia Avenue					
Approach:	North Bound			South Bound			East Bound			West Bound		
Movement:	L - T - R			L - T - R			L - T - R			L - T - R		
Control:	Protected			Protected			Permitted			Permitted		
Rights:	Include			Include			Include			Include		
Min. Green:	0	0	0	0	0	0	0	0	0	0	0	0
Lanes:	1 0 1	1 0		1 0 1	1 0		1 0 1	0 1		0 1 0	1 0	
Volume Module:												
Base Vol:	224	419	22	57	664	11	11	166	316	41	287	86
Growth Adj:	1.00	1.00	1.00	1.00	1.00	1.00	1.00	1.00	1.00	1.00	1.00	1.00
Initial Bse:	224	419	22	57	664	11	11	166	316	41	287	86
Added Vol:	-72	-50	0	0	-140	155	118	0	-189	0	0	0
Committed P:	0	40	0	55	69	0	0	2	0	6	32	0
Initial Fut:	152	409	22	112	593	166	129	168	127	47	319	86
User Adj:	1.00	1.00	1.00	1.00	1.00	1.00	1.00	1.00	1.00	1.00	1.00	1.00
PHF Adj:	1.00	1.00	1.00	1.00	1.00	1.00	1.00	1.00	1.00	1.00	1.00	1.00
PHF Volume:	152	409	22	112	593	166	129	168	127	47	319	86
Reduct Vol:	0	0	0	0	0	0	0	0	0	0	0	0
Reduced Vol:	152	409	22	112	593	166	129	168	127	47	319	86
PCE Adj:	1.00	1.00	1.00	1.00	1.00	1.00	1.00	1.00	1.00	1.00	1.00	1.00
MLF Adj:	1.00	1.00	1.00	1.00	1.00	1.00	1.00	1.00	1.00	1.00	1.00	1.00
FinalVolume:	152	409	22	112	593	166	129	168	127	47	319	86
Saturation Flow Module:												
Sat/Lane:	1600	1600	1600	1600	1600	1600	1600	1600	1600	1600	1600	1600
Adjustment:	1.00	1.00	1.00	1.00	1.00	1.00	1.00	1.00	1.00	1.00	1.00	1.00
Lanes:	1.00	1.90	0.10	1.00	1.56	0.44	1.00	1.00	1.00	0.21	1.41	0.38
Final Sat.:	1600	3037	163	1600	2500	700	1600	1600	1600	333	2258	609
Capacity Analysis Module:												
Vol/Sat:	0.10	0.13	0.13	0.07	0.24	0.24	0.08	0.11	0.08	0.03	0.14	0.14
Crit Moves:	****				****		****				****	

Newport Banning Ranch
Year 2016 with Project Bluff Road Alternative - TPO Analysis
PM Peak Hour

Level Of Service Computation Report
ICU 1(Loss as Cycle Length %) Method (Future Volume Alternative)

Intersection #5 Hospital Rd/Newport Blvd

Cycle (sec):	120	Critical Vol./Cap.(X):	0.636
Loss Time (sec):	0 (Y+R=4.0 sec)	Average Delay (sec/veh):	xxxxxx
Optimal Cycle:	63	Level Of Service:	B

Street Name:	Newport Boulevard						Hospital Road					
Approach:	North Bound			South Bound			East Bound			West Bound		
Movement:	L - T - R			L - T - R			L - T - R			L - T - R		
Control:	Protected			Protected			Protected			Protected		
Rights:	Include			Include			Include			Include		
Min. Green:	0	0	0	0	0	0	0	0	0	0	0	0
Lanes:	1 0 3	0 1		1 0 3	0 1		2 0 1	0 1		1 0 1	1 0	
Volume Module:												
Base Vol:	117	1215	55	48	1513	205	293	135	187	121	178	38
Growth Adj:	1.00	1.00	1.00	1.00	1.00	1.00	1.00	1.00	1.00	1.00	1.00	1.00
Initial Bse:	117	1215	55	48	1513	205	293	135	187	121	178	38
Added Vol:	0	0	0	0	0	0	0	0	0	0	0	0
Committed P:	26	69	0	0	62	6	19	0	41	0	0	0
Initial Fut:	143	1284	55	48	1575	211	312	135	228	121	178	38
User Adj:	1.00	1.00	1.00	1.00	1.00	1.00	1.00	1.00	1.00	1.00	1.00	1.00
PHF Adj:	1.00	1.00	1.00	1.00	1.00	1.00	1.00	1.00	1.00	1.00	1.00	1.00
PHF Volume:	143	1284	55	48	1575	211	312	135	228	121	178	38
Reduct Vol:	0	0	0	0	0	0	0	0	0	0	0	0
Reduced Vol:	143	1284	55	48	1575	211	312	135	228	121	178	38
PCE Adj:	1.00	1.00	1.00	1.00	1.00	1.00	1.00	1.00	1.00	1.00	1.00	1.00
MLF Adj:	1.00	1.00	1.00	1.00	1.00	1.00	1.00	1.00	1.00	1.00	1.00	1.00
FinalVolume:	143	1284	55	48	1575	211	312	135	228	121	178	38
Saturation Flow Module:												
Sat/Lane:	1600	1600	1600	1600	1600	1600	1600	1600	1600	1600	1600	1600
Adjustment:	1.00	1.00	1.00	1.00	1.00	1.00	1.00	1.00	1.00	1.00	1.00	1.00
Lanes:	1.00	3.00	1.00	1.00	3.00	1.00	2.00	1.00	1.00	1.00	1.65	0.35
Final Sat.:	1600	4800	1600	1600	4800	1600	3200	1600	1600	1600	2637	563
Capacity Analysis Module:												
Vol/Sat:	0.09	0.27	0.03	0.03	0.33	0.13	0.10	0.08	0.14	0.08	0.07	0.07
Crit Moves:	****				****				****	****		

Newport Banning Ranch
Year 2016 with Project Bluff Road Alternative - TPO Analysis
PM Peak Hour

Level Of Service Computation Report
ICU 1(Loss as Cycle Length %) Method (Future Volume Alternative)

Intersection #6 Orange St/W. Coast Hwy

Cycle (sec):	120	Critical Vol./Cap.(X):	0.748
Loss Time (sec):	0 (Y+R=4.0 sec)	Average Delay (sec/veh):	xxxxxx
Optimal Cycle:	74	Level Of Service:	C

Street Name:	Orange Street						W. Coast Highway					
Approach:	North Bound			South Bound			East Bound			West Bound		
Movement:	L - T - R			L - T - R			L - T - R			L - T - R		
Control:	Permitted			Permitted			Protected			Protected		
Rights:	Include			Include			Include			Include		
Min. Green:	0	0	0	0	0	0	0	0	0	0	0	0
Lanes:	0 1	0 0	1	0 1	0 0	1	1 0	2 1	0	1 0	3 0	1
Volume Module:												
Base Vol:	37	8	29	32	2	18	44	1170	19	53	2788	26
Growth Adj:	1.00	1.00	1.00	1.00	1.00	1.00	1.07	1.07	1.07	1.07	1.07	1.07
Initial Bse:	37	8	29	32	2	18	47	1254	20	57	2989	28
Added Vol:	0	0	0	0	0	0	0	198	0	0	132	0
Committed P:	0	0	0	0	0	0	0	56	0	0	95	0
Initial Fut:	37	8	29	32	2	18	47	1508	20	57	3216	28
User Adj:	1.00	1.00	1.00	1.00	1.00	1.00	1.00	1.00	1.00	1.00	1.00	1.00
PHF Adj:	1.00	1.00	1.00	1.00	1.00	1.00	1.00	1.00	1.00	1.00	1.00	1.00
PHF Volume:	37	8	29	32	2	18	47	1508	20	57	3216	28
Reduct Vol:	0	0	0	0	0	0	0	0	0	0	0	0
Reduced Vol:	37	8	29	32	2	18	47	1508	20	57	3216	28
PCE Adj:	1.00	1.00	1.00	1.00	1.00	1.00	1.00	1.00	1.00	1.00	1.00	1.00
MLF Adj:	1.00	1.00	1.00	1.00	1.00	1.00	1.00	1.00	1.00	1.00	1.00	1.00
FinalVolume:	37	8	29	32	2	18	47	1508	20	57	3216	28
Saturation Flow Module:												
Sat/Lane:	1600	1600	1600	1600	1600	1600	1600	1600	1600	1600	1600	1600
Adjustment:	1.00	1.00	1.00	1.00	1.00	1.00	1.00	1.00	1.00	1.00	1.00	1.00
Lanes:	0.82	0.18	1.00	0.94	0.06	1.00	1.00	2.96	0.04	1.00	3.00	1.00
Final Sat.:	1316	284	1600	1506	94	1600	1600	4736	64	1600	4800	1600
Capacity Analysis Module:												
Vol/Sat:	0.02	0.03	0.02	0.02	0.02	0.01	0.03	0.32	0.32	0.04	0.67	0.02
Crit Moves:		****		****			****				****	

Newport Banning Ranch
Year 2016 with Project Bluff Road Alternative - TPO Analysis
PM Peak Hour

Level Of Service Computation Report
ICU 1(Loss as Cycle Length %) Method (Future Volume Alternative)

Intersection #7 Prospect St/W. Coast Hwy

Cycle (sec):	120	Critical Vol./Cap.(X):	0.721
Loss Time (sec):	0 (Y+R=4.0 sec)	Average Delay (sec/veh):	xxxxxx
Optimal Cycle:	67	Level Of Service:	C

Street Name:	Prospect Street						W. Coast Highway					
Approach:	North Bound			South Bound			East Bound			West Bound		
Movement:	L - T - R			L - T - R			L - T - R			L - T - R		
Control:	Permitted			Permitted			Protected			Protected		
Rights:	Include			Include			Include			Include		
Min. Green:	0	0	0	0	0	0	0	0	0	0	0	0
Lanes:	0 1	0 0	1	0 0	1!	0 0	1 0	2 1	0	1 0	2 1	0
Volume Module:												
Base Vol:	21	0	28	88	1	8	16	1279	10	23	2645	132
Growth Adj:	1.00	1.00	1.00	1.00	1.00	1.00	1.07	1.07	1.07	1.07	1.07	0.00
Initial Bse:	21	0	28	88	1	8	17	1371	11	25	2835	0
Added Vol:	0	0	0	0	0	0	0	198	0	0	132	0
Committed P:	0	0	0	0	0	0	0	56	0	0	95	0
Initial Fut:	21	0	28	88	1	8	17	1625	11	25	3062	0
User Adj:	1.00	1.00	1.00	1.00	1.00	1.00	1.00	1.00	1.00	1.00	1.00	1.00
PHF Adj:	1.00	1.00	1.00	1.00	1.00	1.00	1.00	1.00	1.00	1.00	1.00	1.00
PHF Volume:	21	0	28	88	1	8	17	1625	11	25	3062	0
Reduct Vol:	0	0	0	0	0	0	0	0	0	0	0	0
Reduced Vol:	21	0	28	88	1	8	17	1625	11	25	3062	0
PCE Adj:	1.00	1.00	1.00	1.00	1.00	1.00	1.00	1.00	1.00	1.00	1.00	1.00
MLF Adj:	1.00	1.00	1.00	1.00	1.00	1.00	1.00	1.00	1.00	1.00	1.00	1.00
FinalVolume:	21	0	28	88	1	8	17	1625	11	25	3062	0
Saturation Flow Module:												
Sat/Lane:	1600	1600	1600	1600	1600	1600	1600	1600	1600	1600	1600	1600
Adjustment:	1.00	1.00	1.00	1.00	1.00	1.00	1.00	1.00	1.00	1.00	1.00	1.00
Lanes:	1.00	0.00	1.00	0.91	0.01	0.08	1.00	2.98	0.02	1.00	3.00	0.00
Final Sat.:	1600	0	1600	1452	16	132	1600	4769	31	1600	4800	0
Capacity Analysis Module:												
Vol/Sat:	0.01	0.00	0.02	0.06	0.06	0.06	0.01	0.34	0.34	0.02	0.64	0.00
Crit Moves:			****	****			****				****	

Newport Banning Ranch
Year 2016 with Project Bluff Road Alternative - TPO Analysis
PM Peak Hour

Level Of Service Computation Report
ICU 1(Loss as Cycle Length %) Method (Future Volume Alternative)

Intersection #8 W. Coast Hwy/Superior Ave

Cycle (sec):	120	Critical Vol./Cap.(X):	0.650
Loss Time (sec):	0 (Y+R=4.0 sec)	Average Delay (sec/veh):	xxxxxx
Optimal Cycle:	65	Level Of Service:	B

Street Name:	Superior Avenue						W. Coast Highway					
Approach:	North Bound			South Bound			East Bound			West Bound		
Movement:	L - T - R			L - T - R			L - T - R			L - T - R		
Control:	Split Phase			Split Phase			Protected			Protected		
Rights:	Include			Ovl			Include			Include		
Min. Green:	0	0	0	0	0	0	0	0	0	0	0	0
Lanes:	1 1 0	1 0		1 1 1	0 2		2 0 3	0 1		1 0 3	1 0	
Volume Module:												
Base Vol:	254	208	78	228	243	710	258	986	243	226	1854	162
Growth Adj:	1.00	1.00	1.00	1.00	1.00	1.00	1.07	1.07	1.07	1.07	1.07	1.07
Initial Bse:	254	208	78	228	243	710	277	1057	260	242	1987	174
Added Vol:	56	0	0	0	0	-329	-122	68	36	0	102	0
Committed P:	0	8	1	0	14	55	32	36	3	0	67	0
Initial Fut:	310	216	79	228	257	436	187	1161	299	242	2156	174
User Adj:	1.00	1.00	1.00	1.00	1.00	1.00	1.00	1.00	1.00	1.00	1.00	1.00
PHF Adj:	1.00	1.00	1.00	1.00	1.00	1.00	1.00	1.00	1.00	1.00	1.00	1.00
PHF Volume:	310	216	79	228	257	436	187	1161	299	242	2156	174
Reduct Vol:	0	0	0	0	0	0	0	0	0	0	0	0
Reduced Vol:	310	216	79	228	257	436	187	1161	299	242	2156	174
PCE Adj:	1.00	1.00	1.00	1.00	1.00	1.00	1.00	1.00	1.00	1.00	1.00	1.00
MLF Adj:	1.00	1.00	1.00	1.00	1.00	1.00	1.00	1.00	1.00	1.00	1.00	1.00
FinalVolume:	310	216	79	228	257	436	187	1161	299	242	2156	174
OvlAdjVol:						249						
Saturation Flow Module:												
Sat/Lane:	1600	1600	1600	1600	1600	1600	1600	1600	1600	1600	1600	1600
Adjustment:	1.00	1.00	1.00	1.00	1.00	1.00	1.00	1.00	1.00	1.00	1.00	1.00
Lanes:	1.54	1.07	0.39	1.41	1.59	2.00	2.00	3.00	1.00	1.00	3.70	0.30
Final Sat.:	2462	1712	625	2256	2544	3200	3200	4800	1600	1600	5923	477
Capacity Analysis Module:												
Vol/Sat:	0.13	0.13	0.13	0.10	0.10	0.14	0.06	0.24	0.19	0.15	0.36	0.36
OvlAdjV/S:						0.08						
Crit Moves:			****		****		****				****	

Newport Banning Ranch
Year 2016 with Project Bluff Road Alternative - TPO Analysis
PM Peak Hour

Level Of Service Computation Report
ICU 1(Loss as Cycle Length %) Method (Future Volume Alternative)

Intersection #9 Newport Blvd/W. Coast Hwy

Cycle (sec):	120	Critical Vol./Cap.(X):	0.725
Loss Time (sec):	0 (Y+R=4.0 sec)	Average Delay (sec/veh):	xxxxxx
Optimal Cycle:	83	Level Of Service:	C

Street Name:	Newport Boulevard									W. Coast Highway								
Approach:	North Bound						South Bound						East Bound						West Bound					
Movement:	L	-	T	-	R		L	-	T	-	R		L	-	T	-	R		L	-	T	-	R	
Control:	Protected						Protected						Protected						Protected					
Rights:	Include						Include						Ignore						Ignore					
Min. Green:	0	0	0				0	0	0				0	0	0				0	0	0			
Lanes:	0	0	0	0	0		2	0	0	0	1		0	0	2	0	1		0	0	3	0	1	
Volume Module:																								
Base Vol:	0	0	0				586	0	393				0	1261	159				0	1823	487			
Growth Adj:	1.00	1.00	1.00				1.00	1.00	1.00				1.00	1.07	1.07				1.00	1.07	1.07			
Initial Bse:	0	0	0				586	0	393				0	1352	170				0	1954	522			
Added Vol:	0	0	0				0	0	0				0	68	0				0	102	0			
Committed P:	0	0	0				44	0	19				0	76	7				0	26	0			
Initial Fut:	0	0	0				630	0	412				0	1496	177				0	2082	522			
User Adj:	1.00	1.00	1.00				1.00	1.00	1.00				1.00	1.00	0.00				1.00	1.00	0.00			
PHF Adj:	1.00	1.00	1.00				1.00	1.00	1.00				1.00	1.00	0.00				1.00	1.00	0.00			
PHF Volume:	0	0	0				630	0	412				0	1496	0				0	2082	0			
Reduct Vol:	0	0	0				0	0	0				0	0	0				0	0	0			
Reduced Vol:	0	0	0				630	0	412				0	1496	0				0	2082	0			
PCE Adj:	1.00	1.00	1.00				1.00	1.00	1.00				1.00	1.00	0.00				1.00	1.00	0.00			
MLF Adj:	1.00	1.00	1.00				1.00	1.00	1.00				1.00	1.00	0.00				1.00	1.00	0.00			
FinalVolume:	0	0	0				630	0	412				0	1496	0				0	2082	0			
Saturation Flow Module:																								
Sat/Lane:	1600	1600	1600				1600	1600	1600				1600	1600	1600				1600	1600	1600			
Adjustment:	1.00	1.00	1.00				1.00	1.00	1.00				1.00	1.00	1.00				1.00	1.00	1.00			
Lanes:	0.00	0.00	0.00				2.00	0.00	1.00				0.00	2.00	1.00				0.00	3.00	1.00			
Final Sat.:	0	0	0				3200	0	1600				0	3200	1600				0	4800	1600			
Capacity Analysis Module:																								
Vol/Sat:	0.00	0.00	0.00				0.20	0.00	0.26				0.00	0.47	0.00				0.00	0.43	0.00			
Crit Moves:									****					****					****					

Newport Banning Ranch
Year 2016 with Project Bluff Road Alternative - TPO Analysis
PM Peak Hour

Level Of Service Computation Report
ICU 1(Loss as Cycle Length %) Method (Future Volume Alternative)

Intersection #10 Riverside Ave/W. Coast Hwy

Cycle (sec):	120	Critical Vol./Cap.(X):	0.796
Loss Time (sec):	0 (Y+R=4.0 sec)	Average Delay (sec/veh):	xxxxxx
Optimal Cycle:	91	Level Of Service:	C

Street Name:	Riverside Avenue						W. Coast Highway					
Approach:	North Bound			South Bound			East Bound			West Bound		
Movement:	L - T - R			L - T - R			L - T - R			L - T - R		
Control:	Permitted			Permitted			Protected			Protected		
Rights:	Include			Ovl			Include			Include		
Min. Green:	0	0	0	0	0	0	0	0	0	0	0	0
Lanes:	0 0	1! 0	0	0 1	0 0	1	1 0	1 1	0	1 0	3 0	1
Volume Module:												
Base Vol:	10	11	2	98	2	404	244	1373	5	11	2155	70
Growth Adj:	1.00	1.00	1.00	1.00	1.00	1.00	1.07	1.07	1.07	1.07	1.07	1.07
Initial Bse:	10	11	2	98	2	404	262	1472	5	12	2310	75
Added Vol:	0	0	0	0	0	15	9	59	0	0	87	0
Committed P:	0	0	0	2	0	0	0	138	0	0	139	3
Initial Fut:	10	11	2	100	2	419	271	1669	5	12	2536	78
User Adj:	1.00	1.00	1.00	1.00	1.00	1.00	1.00	1.00	1.00	1.00	1.00	1.00
PHF Adj:	1.00	1.00	1.00	1.00	1.00	1.00	1.00	1.00	1.00	1.00	1.00	1.00
PHF Volume:	10	11	2	100	2	419	271	1669	5	12	2536	78
Reduct Vol:	0	0	0	0	0	0	0	0	0	0	0	0
Reduced Vol:	10	11	2	100	2	419	271	1669	5	12	2536	78
PCE Adj:	1.00	1.00	1.00	1.00	1.00	1.00	1.00	1.00	1.00	1.00	1.00	1.00
MLF Adj:	1.00	1.00	1.00	1.00	1.00	1.00	1.00	1.00	1.00	1.00	1.00	1.00
FinalVolume:	10	11	2	100	2	419	271	1669	5	12	2536	78
OvlAdjVol:						148						
Saturation Flow Module:												
Sat/Lane:	1600	1600	1600	1600	1600	1600	1600	1600	1600	1600	1600	1600
Adjustment:	1.00	1.00	1.00	1.00	1.00	1.00	1.00	1.00	1.00	1.00	1.00	1.00
Lanes:	0.43	0.48	0.09	0.98	0.02	1.00	1.00	1.99	0.01	1.00	3.00	1.00
Final Sat.:	696	765	139	1569	31	1600	1600	3190	10	1600	4800	1600
Capacity Analysis Module:												
Vol/Sat:	0.01	0.01	0.01	0.06	0.06	0.26	0.17	0.52	0.52	0.01	0.53	0.05
OvlAdjV/S:						0.09						
Crit Moves:	****					****	****				****	

Newport Banning Ranch
Year 2016 with Project Bluff Road Alternative - TPO Analysis
PM Peak Hour

Level Of Service Computation Report
ICU 1(Loss as Cycle Length %) Method (Future Volume Alternative)

Intersection #11 Tustin Ave/W. Coast Hwy

Cycle (sec):	120	Critical Vol./Cap.(X):	0.682
Loss Time (sec):	0 (Y+R=4.0 sec)	Average Delay (sec/veh):	xxxxxx
Optimal Cycle:	59	Level Of Service:	B

Street Name:	Tustin Avenue						W. Coast Highway					
Approach:	North Bound			South Bound			East Bound			West Bound		
Movement:	L - T - R			L - T - R			L - T - R			L - T - R		
Control:	Permitted			Permitted			Protected			Permitted		
Rights:	Include			Include			Include			Include		
Min. Green:	0	0	0	0	0	0	0	0	0	0	0	0
Lanes:	0 0 0 1 0			0 0 1! 0 0			1 0 1 1 0			0 0 3 0 1		
Volume Module:												
Base Vol:	0	1	2	55	0	27	94	1376	20	0	2230	52
Growth Adj:	1.00	1.00	1.00	1.00	1.00	1.00	1.07	1.07	1.07	1.07	1.07	1.07
Initial Bse:	0	1	2	55	0	27	101	1475	21	0	2391	56
Added Vol:	0	0	0	0	0	25	18	40	0	0	63	0
Committed P:	0	0	0	0	0	0	0	140	0	0	143	0
Initial Fut:	0	1	2	55	0	52	119	1655	21	0	2597	56
User Adj:	1.00	1.00	1.00	1.00	1.00	1.00	1.00	1.00	1.00	1.00	1.00	1.00
PHF Adj:	1.00	1.00	1.00	1.00	1.00	1.00	1.00	1.00	1.00	1.00	1.00	1.00
PHF Volume:	0	1	2	55	0	52	119	1655	21	0	2597	56
Reduct Vol:	0	0	0	0	0	0	0	0	0	0	0	0
Reduced Vol:	0	1	2	55	0	52	119	1655	21	0	2597	56
PCE Adj:	1.00	1.00	1.00	1.00	1.00	1.00	1.00	1.00	1.00	1.00	1.00	1.00
MLF Adj:	1.00	1.00	1.00	1.00	1.00	1.00	1.00	1.00	1.00	1.00	1.00	1.00
FinalVolume:	0	1	2	55	0	52	119	1655	21	0	2597	56
Saturation Flow Module:												
Sat/Lane:	1600	1600	1600	1600	1600	1600	1600	1600	1600	1600	1600	1600
Adjustment:	1.00	1.00	1.00	1.00	1.00	1.00	1.00	1.00	1.00	1.00	1.00	1.00
Lanes:	0.00	0.33	0.67	0.51	0.00	0.49	1.00	1.97	0.03	0.00	3.00	1.00
Final Sat.:	0	533	1067	822	0	778	1600	3159	41	0	4800	1600
Capacity Analysis Module:												
Vol/Sat:	0.00	0.00	0.00	0.03	0.00	0.07	0.07	0.52	0.52	0.00	0.54	0.03
Crit Moves:	****					****	****				****	

Newport Banning Ranch
Year 2016 with Project Bluff Road Alternative - TPO Analysis
PM Peak Hour

Level Of Service Computation Report
ICU 1(Loss as Cycle Length %) Method (Future Volume Alternative)

Intersection #12 Dover Dr/W. Coast Hwy

Cycle (sec):	120	Critical Vol./Cap.(X):	0.797
Loss Time (sec):	0 (Y+R=4.0 sec)	Average Delay (sec/veh):	xxxxxx
Optimal Cycle:	113	Level Of Service:	C

Street Name:	Dover Drive						W. Coast Highway					
Approach:	North Bound			South Bound			East Bound			West Bound		
Movement:	L - T - R			L - T - R			L - T - R			L - T - R		
Control:	Split Phase			Split Phase			Protected			Protected		
Rights:	Include			Include			Include			Ignore		
Min. Green:	0	0	0	0	0	0	0	0	0	0	0	0
Lanes:	1 0 1	1 0		3 0 1	0 1		2 0 2	1 0		1 0 3	0 1	
Volume Module:												
Base Vol:	35	42	41	918	61	119	145	1270	25	50	2153	1021
Growth Adj:	1.00	1.00	1.00	1.00	1.00	1.00	1.07	1.07	1.07	1.07	1.07	1.07
Initial Bse:	35	42	41	918	61	119	155	1361	27	54	2308	1095
Added Vol:	0	0	0	0	0	0	0	40	0	0	63	0
Committed P:	0	0	0	3	0	23	34	132	0	0	127	12
Initial Fut:	35	42	41	921	61	142	189	1533	27	54	2498	1107
User Adj:	1.00	1.00	1.00	1.00	1.00	1.00	1.00	1.00	1.00	1.00	1.00	0.00
PHF Adj:	1.00	1.00	1.00	1.00	1.00	1.00	1.00	1.00	1.00	1.00	1.00	0.00
PHF Volume:	35	42	41	921	61	142	189	1533	27	54	2498	0
Reduct Vol:	0	0	0	0	0	0	0	0	0	0	0	0
Reduced Vol:	35	42	41	921	61	142	189	1533	27	54	2498	0
PCE Adj:	1.00	1.00	1.00	1.00	1.00	1.00	1.00	1.00	1.00	1.00	1.00	0.00
MLF Adj:	1.00	1.00	1.00	1.00	1.00	1.00	1.00	1.00	1.00	1.00	1.00	0.00
FinalVolume:	35	42	41	921	61	142	189	1533	27	54	2498	0
Saturation Flow Module:												
Sat/Lane:	1600	1600	1600	1600	1600	1600	1600	1600	1600	1600	1600	1600
Adjustment:	1.00	1.00	1.00	1.00	1.00	1.00	1.00	1.00	1.00	1.00	1.00	1.00
Lanes:	1.00	1.01	0.99	3.00	1.00	1.00	2.00	2.95	0.05	1.00	3.00	1.00
Final Sat.:	1600	1619	1581	4800	1600	1600	3200	4718	82	1600	4800	1600
Capacity Analysis Module:												
Vol/Sat:	0.02	0.03	0.03	0.19	0.04	0.09	0.06	0.33	0.33	0.03	0.52	0.00
Crit Moves:			****	****			****				****	

Newport Banning Ranch
Year 2016 with Project Bluff Road Alternative - TPO Analysis
PM Peak Hour

Level Of Service Computation Report
ICU 1(Loss as Cycle Length %) Method (Future Volume Alternative)

Intersection #13 Magnolia St/Hamilton Ave

Cycle (sec):	100	Critical Vol./Cap.(X):	0.595
Loss Time (sec):	5 (Y+R=4.0 sec)	Average Delay (sec/veh):	xxxxxx
Optimal Cycle:	29	Level Of Service:	A

Street Name:	Magnolia Street						Hamilton Avenue					
Approach:	North Bound			South Bound			East Bound			West Bound		
Movement:	L - T - R			L - T - R			L - T - R			L - T - R		
Control:	Prot+Permit			Prot+Permit			Permitted			Permitted		
Rights:	Include			Include			Include			Include		
Min. Green:	0	0	0	0	0	0	0	0	0	0	0	0
Lanes:	1 0 1	1 0		1 0 2	0 1		1 0 0	1 0		1 0 1	0 1	
Volume Module:												
Base Vol:	100	365	55	192	247	25	9	188	71	71	413	379
Growth Adj:	1.07	1.07	1.07	1.07	1.07	1.07	1.07	1.07	1.07	1.07	1.07	1.07
Initial Bse:	107	391	59	206	265	27	10	202	76	76	443	406
Added Vol:	19	17	0	18	31	0	0	18	31	0	14	15
Committed P:	4	6	0	0	5	0	0	0	2	0	0	0
Initial Fut:	130	414	59	224	301	27	10	220	109	76	457	421
User Adj:	1.00	1.00	1.00	1.00	1.00	1.00	1.00	1.00	1.00	1.00	1.00	1.00
PHF Adj:	1.00	1.00	1.00	1.00	1.00	1.00	1.00	1.00	1.00	1.00	1.00	1.00
PHF Volume:	130	414	59	224	301	27	10	220	109	76	457	421
Reduct Vol:	0	0	0	0	0	0	0	0	0	0	0	0
Reduced Vol:	130	414	59	224	301	27	10	220	109	76	457	421
PCE Adj:	1.00	1.00	1.00	1.00	1.00	1.00	1.00	1.00	1.00	1.00	1.00	1.00
MLF Adj:	1.00	1.00	1.00	1.00	1.00	1.00	1.00	1.00	1.00	1.00	1.00	1.00
FinalVolume:	130	414	59	224	301	27	10	220	109	76	457	421
Saturation Flow Module:												
Sat/Lane:	1600	1600	1600	1600	1600	1600	1600	1600	1600	1600	1600	1600
Adjustment:	1.06	1.06	1.06	1.06	1.06	1.06	1.06	1.06	1.06	1.06	1.06	1.06
Lanes:	1.00	1.75	0.25	1.00	2.00	1.00	1.00	0.67	0.33	1.00	1.00	1.00
Final Sat.:	1700	2976	424	1700	3400	1700	1700	1136	564	1700	1700	1700
Capacity Analysis Module:												
Vol/Sat:	0.08	0.14	0.14	0.13	0.09	0.02	0.01	0.19	0.19	0.04	0.27	0.25
Crit Moves:		****		****			****				****	

Newport Banning Ranch
Year 2016 with Project Bluff Road Alternative - TPO Analysis
PM Peak Hour

Level Of Service Computation Report
ICU 1(Loss as Cycle Length %) Method (Future Volume Alternative)

Intersection #14 Bushard St/Hamilton Ave

Cycle (sec):	100	Critical Vol./Cap.(X):	0.571
Loss Time (sec):	5 (Y+R=4.0 sec)	Average Delay (sec/veh):	xxxxxx
Optimal Cycle:	27	Level Of Service:	A

Street Name:	Bushard Street						Hamilton Avenue					
Approach:	North Bound			South Bound			East Bound			West Bound		
Movement:	L - T - R			L - T - R			L - T - R			L - T - R		
Control:	Permitted			Permitted			Permitted			Permitted		
Rights:	Include			Include			Include			Include		
Min. Green:	0	0	0	0	0	0	0	0	0	0	0	0
Lanes:	1 0 1	1 0		1 0 1	1 0		1 0 1	1 0		1 0 1	1 0	
Volume Module:												
Base Vol:	55	265	43	117	143	39	26	355	43	44	779	251
Growth Adj:	1.07	1.07	1.07	1.07	1.07	1.07	1.07	1.07	1.07	1.07	1.07	1.07
Initial Bse:	59	284	46	125	153	42	28	381	46	47	835	269
Added Vol:	0	0	0	0	0	0	0	36	0	0	29	0
Committed P:	0	0	0	0	0	0	0	0	0	0	0	0
Initial Fut:	59	284	46	125	153	42	28	417	46	47	864	269
User Adj:	1.00	1.00	1.00	1.00	1.00	1.00	1.00	1.00	1.00	1.00	1.00	1.00
PHF Adj:	1.00	1.00	1.00	1.00	1.00	1.00	1.00	1.00	1.00	1.00	1.00	1.00
PHF Volume:	59	284	46	125	153	42	28	417	46	47	864	269
Reduct Vol:	0	0	0	0	0	0	0	0	0	0	0	0
Reduced Vol:	59	284	46	125	153	42	28	417	46	47	864	269
PCE Adj:	1.00	1.00	1.00	1.00	1.00	1.00	1.00	1.00	1.00	1.00	1.00	1.00
MLF Adj:	1.00	1.00	1.00	1.00	1.00	1.00	1.00	1.00	1.00	1.00	1.00	1.00
FinalVolume:	59	284	46	125	153	42	28	417	46	47	864	269
Saturation Flow Module:												
Sat/Lane:	1600	1600	1600	1600	1600	1600	1600	1600	1600	1600	1600	1600
Adjustment:	1.06	1.06	1.06	1.06	1.06	1.06	1.06	1.06	1.06	1.06	1.06	1.06
Lanes:	1.00	1.72	0.28	1.00	1.57	0.43	1.00	1.80	0.20	1.00	1.53	0.47
Final Sat.:	1700	2925	475	1700	2671	729	1700	3061	339	1700	2593	807
Capacity Analysis Module:												
Vol/Sat:	0.03	0.10	0.10	0.07	0.06	0.06	0.02	0.14	0.14	0.03	0.33	0.33
Crit Moves:		****		****			****				****	

Newport Banning Ranch
Year 2016 with Project Bluff Road Alternative - TPO Analysis
PM Peak Hour

Level Of Service Computation Report
ICU 1(Loss as Cycle Length %) Method (Future Volume Alternative)

Intersection #15 Brookhurst St/Hamilton Ave (Victoria St)

Cycle (sec):	100	Critical Vol./Cap.(X):	0.684
Loss Time (sec):	5 (Y+R=4.0 sec)	Average Delay (sec/veh):	xxxxxx
Optimal Cycle:	36	Level Of Service:	B

Street Name:	Brookhurst						Hamilton Avenue (Victoria Street)					
Approach:	North Bound			South Bound			East Bound			West Bound		
Movement:	L - T - R			L - T - R			L - T - R			L - T - R		
Control:	Protected			Protected			Prot+Permit			Prot+Permit		
Rights:	Include			Include			Include			Include		
Min. Green:	0	0	0	0	0	0	0	0	0	0	0	0
Lanes:	1 0 3 0 1			2 0 2 1 0			1 0 1 1 0			1 0 2 0 1		
Volume Module:												
Base Vol:	117	581	192	397	335	106	113	353	67	277	943	489
Growth Adj:	1.07	1.07	1.07	1.07	1.07	1.07	1.07	1.07	1.07	1.07	1.07	1.07
Initial Bse:	125	623	206	426	359	114	121	378	72	297	1011	524
Added Vol:	28	32	0	0	49	0	0	1	35	0	0	0
Committed P:	0	5	0	0	0	0	0	0	0	0	0	0
Initial Fut:	153	660	206	426	408	114	121	379	107	297	1011	524
User Adj:	1.00	1.00	1.00	1.00	1.00	1.00	1.00	1.00	1.00	1.00	1.00	1.00
PHF Adj:	1.00	1.00	1.00	1.00	1.00	1.00	1.00	1.00	1.00	1.00	1.00	1.00
PHF Volume:	153	660	206	426	408	114	121	379	107	297	1011	524
Reduct Vol:	0	0	0	0	0	0	0	0	0	0	0	0
Reduced Vol:	153	660	206	426	408	114	121	379	107	297	1011	524
PCE Adj:	1.00	1.00	1.00	1.00	1.00	1.00	1.00	1.00	1.00	1.00	1.00	1.00
MLF Adj:	1.00	1.00	1.00	1.00	1.00	1.00	1.00	1.00	1.00	1.00	1.00	1.00
FinalVolume:	153	660	206	426	408	114	121	379	107	297	1011	524
Saturation Flow Module:												
Sat/Lane:	1600	1600	1600	1600	1600	1600	1600	1600	1600	1600	1600	1600
Adjustment:	1.06	1.06	1.06	1.06	1.06	1.06	1.06	1.06	1.06	1.06	1.06	1.06
Lanes:	1.00	3.00	1.00	2.00	2.35	0.65	1.00	1.56	0.44	1.00	2.00	1.00
Final Sat.:	1700	5100	1700	3400	3989	1111	1700	2653	747	1700	3400	1700
Capacity Analysis Module:												
Vol/Sat:	0.09	0.13	0.12	0.13	0.10	0.10	0.07	0.14	0.14	0.17	0.30	0.31
Crit Moves:		****		****			****					****

Newport Banning Ranch
Year 2016 with Project Bluff Road Alternative - TPO Analysis
PM Peak Hour

Level Of Service Computation Report
ICU 1(Loss as Cycle Length %) Method (Future Volume Alternative)

Intersection #16 Magnolia St/Banning Ave

Cycle (sec):	100	Critical Vol./Cap.(X):	0.305
Loss Time (sec):	5 (Y+R=4.0 sec)	Average Delay (sec/veh):	xxxxxx
Optimal Cycle:	17	Level Of Service:	A

Street Name:	Magnolia Street						Banning Avenue					
Approach:	North Bound			South Bound			East Bound			West Bound		
Movement:	L - T - R			L - T - R			L - T - R			L - T - R		
Control:	Protected			Protected			Split Phase			Split Phase		
Rights:	Include			Include			Include			Include		
Min. Green:	0	0	0	0	0	0	0	0	0	0	0	0
Lanes:	0 0 1	1 0		1 0 2	0 0		0 0 0	0 0		2 0 0	0 1	
Volume Module:												
Base Vol:	0	435	60	76	300	0	0	0	0	23	0	56
Growth Adj:	1.07	1.07	1.07	1.07	1.07	1.07	1.07	1.07	1.07	1.07	1.07	1.07
Initial Bse:	0	466	64	81	322	0	0	0	0	25	0	60
Added Vol:	0	36	0	0	61	0	0	0	0	0	0	0
Committed P:	0	18	0	0	11	0	0	0	0	0	0	0
Initial Fut:	0	520	64	81	394	0	0	0	0	25	0	60
User Adj:	1.00	1.00	1.00	1.00	1.00	1.00	1.00	1.00	1.00	1.00	1.00	1.00
PHF Adj:	1.00	1.00	1.00	1.00	1.00	1.00	1.00	1.00	1.00	1.00	1.00	1.00
PHF Volume:	0	520	64	81	394	0	0	0	0	25	0	60
Reduct Vol:	0	0	0	0	0	0	0	0	0	0	0	0
Reduced Vol:	0	520	64	81	394	0	0	0	0	25	0	60
PCE Adj:	1.00	1.00	1.00	1.00	1.00	1.00	1.00	1.00	1.00	1.00	1.00	1.00
MLF Adj:	1.00	1.00	1.00	1.00	1.00	1.00	1.00	1.00	1.00	1.00	1.00	1.00
FinalVolume:	0	520	64	81	394	0	0	0	0	25	0	60
Saturation Flow Module:												
Sat/Lane:	1600	1600	1600	1600	1600	1600	1600	1600	1600	1600	1600	1600
Adjustment:	1.06	1.06	1.06	1.06	1.06	1.06	1.06	1.06	1.06	1.06	1.06	1.06
Lanes:	0.00	1.78	0.22	1.00	2.00	0.00	0.00	0.00	0.00	2.00	0.00	1.00
Final Sat.:	0	3026	374	1700	3400	0	0	0	0	3400	0	1700
Capacity Analysis Module:												
Vol/Sat:	0.00	0.17	0.17	0.05	0.12	0.00	0.00	0.00	0.00	0.01	0.00	0.04
Crit Moves:		****		****								****

Newport Banning Ranch
Year 2016 with Project Bluff Road Alternative - TPO Analysis
PM Peak Hour

Level Of Service Computation Report
2000 HCM 4-Way Stop Method (Future Volume Alternative)

Intersection #17 Bushard St/Banning Ave

Cycle (sec):	100	Critical Vol./Cap.(X):	0.201
Loss Time (sec):	5 (Y+R=4.0 sec)	Average Delay (sec/veh):	9.2
Optimal Cycle:	0	Level Of Service:	A

Street Name:	Bushard Street						Banning Avenue					
Approach:	North Bound			South Bound			East Bound			West Bound		
Movement:	L - T - R			L - T - R			L - T - R			L - T - R		
Control:	Stop Sign			Stop Sign			Stop Sign			Stop Sign		
Rights:	Include			Include			Include			Include		
Min. Green:	0	0	0	0	0	0	0	0	0	0	0	0
Lanes:	1 0 1	1 0		1 0 1	1 0		1 0 0	1 0		1 0 0	1 0	
Volume Module:												
Base Vol:	28	213	23	12	116	38	25	52	10	24	50	21
Growth Adj:	1.07	1.07	1.07	1.07	1.07	1.07	1.07	1.07	1.07	1.07	1.07	1.07
Initial Bse:	30	228	25	13	124	41	27	56	11	26	54	23
Added Vol:	0	0	0	0	0	0	0	0	0	0	0	0
Committed P:	0	3	0	0	2	0	0	0	0	0	0	0
Initial Fut:	30	231	25	13	126	41	27	56	11	26	54	23
User Adj:	1.00	1.00	1.00	1.00	1.00	1.00	1.00	1.00	1.00	1.00	1.00	1.00
PHF Adj:	1.00	1.00	1.00	1.00	1.00	1.00	1.00	1.00	1.00	1.00	1.00	1.00
PHF Volume:	30	231	25	13	126	41	27	56	11	26	54	23
Reduct Vol:	0	0	0	0	0	0	0	0	0	0	0	0
Reduced Vol:	30	231	25	13	126	41	27	56	11	26	54	23
PCE Adj:	1.00	1.00	1.00	1.00	1.00	1.00	1.00	1.00	1.00	1.00	1.00	1.00
MLF Adj:	1.00	1.00	1.00	1.00	1.00	1.00	1.00	1.00	1.00	1.00	1.00	1.00
FinalVolume:	30	231	25	13	126	41	27	56	11	26	54	23
Saturation Flow Module:												
Adjustment:	1.00	1.00	1.00	1.00	1.00	1.00	1.00	1.00	1.00	1.00	1.00	1.00
Lanes:	1.00	1.81	0.19	1.00	1.51	0.49	1.00	0.84	0.16	1.00	0.70	0.30
Final Sat.:	579	1152	124	554	929	311	541	501	96	543	429	180
Capacity Analysis Module:												
Vol/Sat:	0.05	0.20	0.20	0.02	0.14	0.13	0.05	0.11	0.11	0.05	0.13	0.13
Crit Moves:		****			****			****			****	
Delay/Veh:	9.0	9.4	9.3	9.0	9.1	8.8	9.3	9.0	9.0	9.3	9.0	9.0
Delay Adj:	1.00	1.00	1.00	1.00	1.00	1.00	1.00	1.00	1.00	1.00	1.00	1.00
AdjDel/Veh:	9.0	9.4	9.3	9.0	9.1	8.8	9.3	9.0	9.0	9.3	9.0	9.0
LOS by Move:	A	A	A	A	A	A	A	A	A	A	A	A
ApproachDel:		9.4			9.1			9.1			9.1	
Delay Adj:		1.00			1.00			1.00			1.00	
ApprAdjDel:		9.4			9.1			9.1			9.1	
LOS by Appr:		A			A			A			A	
AllWayAvgQ:	0.1	0.2	0.2	0.0	0.1	0.1	0.0	0.1	0.1	0.0	0.1	0.1

Newport Banning Ranch
Year 2016 with Project Bluff Road Alternative - TPO Analysis
PM Peak Hour

Note: Queue reported is the number of cars per lane.

Newport Banning Ranch
Year 2016 with Project Bluff Road Alternative - TPO Analysis
PM Peak Hour

Level Of Service Computation Report
ICU 1(Loss as Cycle Length %) Method (Future Volume Alternative)

Intersection #18 Brookhurst St/Banning Ave

Cycle (sec):	100	Critical Vol./Cap.(X):	0.264
Loss Time (sec):	5 (Y+R=4.0 sec)	Average Delay (sec/veh):	xxxxxx
Optimal Cycle:	17	Level Of Service:	A

Street Name:	Brookhurst Street						Banning Avenue					
Approach:	North Bound			South Bound			East Bound			West Bound		
Movement:	L - T - R			L - T - R			L - T - R			L - T - R		
Control:	Protected			Protected			Split Phase			Split Phase		
Rights:	Include			Include			Include			Include		
Min. Green:	0	0	0	0	0	0	0	0	0	0	0	0
Lanes:	1 0 3 0 0			0 0 2 1 0			1 0 0 0 1			0 0 0 0 0		
Volume Module:												
Base Vol:	12	769	0	0	509	100	61	0	7	0	0	0
Growth Adj:	1.07	1.07	1.07	1.07	1.07	1.07	1.07	1.07	1.07	1.07	1.07	1.07
Initial Bse:	13	824	0	0	546	107	65	0	8	0	0	0
Added Vol:	0	61	0	0	84	0	0	0	0	0	0	0
Committed P:	0	10	0	0	4	0	0	0	0	0	0	0
Initial Fut:	13	895	0	0	634	107	65	0	8	0	0	0
User Adj:	1.00	1.00	1.00	1.00	1.00	1.00	1.00	1.00	1.00	1.00	1.00	1.00
PHF Adj:	1.00	1.00	1.00	1.00	1.00	1.00	1.00	1.00	1.00	1.00	1.00	1.00
PHF Volume:	13	895	0	0	634	107	65	0	8	0	0	0
Reduct Vol:	0	0	0	0	0	0	0	0	0	0	0	0
Reduced Vol:	13	895	0	0	634	107	65	0	8	0	0	0
PCE Adj:	1.00	1.00	1.00	1.00	1.00	1.00	1.00	1.00	1.00	1.00	1.00	1.00
MLF Adj:	1.00	1.00	1.00	1.00	1.00	1.00	1.00	1.00	1.00	1.00	1.00	1.00
FinalVolume:	13	895	0	0	634	107	65	0	8	0	0	0
Saturation Flow Module:												
Sat/Lane:	1600	1600	1600	1600	1600	1600	1600	1600	1600	1600	1600	1600
Adjustment:	1.06	1.06	1.06	1.06	1.06	1.06	1.06	1.06	1.06	1.06	1.06	1.06
Lanes:	1.00	3.00	0.00	0.00	2.57	0.43	1.00	0.00	1.00	0.00	0.00	0.00
Final Sat.:	1700	5100	0	0	4362	738	1700	0	1700	0	0	0
Capacity Analysis Module:												
Vol/Sat:	0.01	0.18	0.00	0.00	0.15	0.15	0.04	0.00	0.00	0.00	0.00	0.00
Crit Moves:		****		****			****					

Newport Banning Ranch
Year 2016 with Project Bluff Road Alternative - TPO Analysis
PM Peak Hour

Level Of Service Computation Report
ICU 1(Loss as Cycle Length %) Method (Future Volume Alternative)

Intersection #19 Magnolia St/PCH

Cycle (sec):	120	Critical Vol./Cap.(X):	0.631
Loss Time (sec):	6 (Y+R=4.0 sec)	Average Delay (sec/veh):	xxxxxx
Optimal Cycle:	34	Level Of Service:	B

Street Name:	Magnolia Street						Pacific Coast Highway					
Approach:	North Bound			South Bound			East Bound			West Bound		
Movement:	L - T - R			L - T - R			L - T - R			L - T - R		
Control:	Split Phase			Split Phase			Protected			Protected		
Rights:	Include			Include			Include			Include		
Min. Green:	0	0	0	0	0	0	0	0	0	0	0	0
Lanes:	1 0 0 1 0			1 1 0 0 1			1 0 3 0 1			1 0 3 0 1		
Volume Module:												
Base Vol:	10	22	15	101	30	152	137	885	17	30	1706	295
Growth Adj:	1.07	1.07	1.07	1.07	1.07	1.07	1.07	1.07	1.07	1.07	1.07	1.07
Initial Bse:	11	24	16	108	32	163	147	949	18	32	1829	316
Added Vol:	0	0	0	61	0	0	0	53	0	0	35	36
Committed P:	0	0	0	11	0	0	0	31	0	0	53	18
Initial Fut:	11	24	16	180	32	163	147	1033	18	32	1917	370
User Adj:	1.00	1.00	1.00	1.00	1.00	1.00	1.00	1.00	1.00	1.00	1.00	1.00
PHF Adj:	1.00	1.00	1.00	1.00	1.00	1.00	1.00	1.00	1.00	1.00	1.00	1.00
PHF Volume:	11	24	16	180	32	163	147	1033	18	32	1917	370
Reduct Vol:	0	0	0	0	0	0	0	0	0	0	0	0
Reduced Vol:	11	24	16	180	32	163	147	1033	18	32	1917	370
PCE Adj:	1.00	1.00	1.00	1.00	1.00	1.00	1.00	1.00	1.00	1.00	1.00	1.00
MLF Adj:	1.00	1.00	1.00	1.00	1.00	1.00	1.00	1.00	1.00	1.00	1.00	1.00
FinalVolume:	11	24	16	180	32	163	147	1033	18	32	1917	370
Saturation Flow Module:												
Sat/Lane:	1600	1600	1600	1600	1600	1600	1600	1600	1600	1600	1600	1600
Adjustment:	1.06	1.06	1.06	1.06	1.06	1.06	1.06	1.06	1.06	1.06	1.06	1.06
Lanes:	1.00	0.59	0.41	1.70	0.30	1.00	1.00	3.00	1.00	1.00	3.00	1.00
Final Sat.:	1700	1011	689	2885	515	1700	1700	5100	1700	1700	5100	1700
Capacity Analysis Module:												
Vol/Sat:	0.01	0.02	0.02	0.06	0.06	0.10	0.09	0.20	0.01	0.02	0.38	0.22
Crit Moves:		****				****	****				****	

Newport Banning Ranch
Year 2016 with Project Bluff Road Alternative - TPO Analysis
PM Peak Hour

Level Of Service Computation Report
ICU 1(Loss as Cycle Length %) Method (Future Volume Alternative)

Intersection #20 Brookhurst St/Bushard St

Cycle (sec):	100	Critical Vol./Cap.(X):	0.363
Loss Time (sec):	5 (Y+R=4.0 sec)	Average Delay (sec/veh):	xxxxxx
Optimal Cycle:	19	Level Of Service:	A

Street Name:	Brookhurst Street						Bushard Street					
Approach:	North Bound			South Bound			East Bound			West Bound		
Movement:	L - T - R			L - T - R			L - T - R			L - T - R		
Control:	Protected			Protected			Permitted			Permitted		
Rights:	Include			Include			Include			Include		
Min. Green:	0	0	0	0	0	0	0	0	0	0	0	0
Lanes:	1 0 2	1 0		1 0 3	0 1		1 0 0	0 1		0 0 1!	0 0	
Volume Module:												
Base Vol:	222	662	0	0	430	22	13	0	92	0	0	0
Growth Adj:	1.07	1.07	1.07	1.07	1.07	1.07	1.07	1.07	1.07	1.07	1.07	1.07
Initial Bse:	238	710	0	0	461	24	14	0	99	0	0	0
Added Vol:	0	61	0	0	84	0	0	0	0	0	0	0
Committed P:	6	18	0	0	8	0	0	0	5	0	0	0
Initial Fut:	244	789	0	0	553	24	14	0	104	0	0	0
User Adj:	1.00	1.00	1.00	1.00	1.00	1.00	1.00	1.00	1.00	1.00	1.00	1.00
PHF Adj:	1.00	1.00	1.00	1.00	1.00	1.00	1.00	1.00	1.00	1.00	1.00	1.00
PHF Volume:	244	789	0	0	553	24	14	0	104	0	0	0
Reduct Vol:	0	0	0	0	0	0	0	0	0	0	0	0
Reduced Vol:	244	789	0	0	553	24	14	0	104	0	0	0
PCE Adj:	1.00	1.00	1.00	1.00	1.00	1.00	1.00	1.00	1.00	1.00	1.00	1.00
MLF Adj:	1.00	1.00	1.00	1.00	1.00	1.00	1.00	1.00	1.00	1.00	1.00	1.00
FinalVolume:	244	789	0	0	553	24	14	0	104	0	0	0
Saturation Flow Module:												
Sat/Lane:	1600	1600	1600	1600	1600	1600	1600	1600	1600	1600	1600	1600
Adjustment:	1.06	1.06	1.06	1.06	1.06	1.06	1.06	1.06	1.06	1.06	1.06	1.06
Lanes:	1.00	3.00	0.00	1.00	3.00	1.00	1.00	0.00	1.00	0.00	1.00	0.00
Final Sat.:	1700	5100	0	1700	5100	1700	1700	0	1700	0	1700	0
Capacity Analysis Module:												
Vol/Sat:	0.14	0.15	0.00	0.00	0.11	0.01	0.01	0.00	0.06	0.00	0.00	0.00
Crit Moves:	****				****				****			

Newport Banning Ranch
Year 2016 with Project Bluff Road Alternative - TPO Analysis
PM Peak Hour

Level Of Service Computation Report
ICU 1(Loss as Cycle Length %) Method (Future Volume Alternative)

Intersection #21 Brookhurst St/PCH

Cycle (sec):	120	Critical Vol./Cap.(X):	0.742
Loss Time (sec):	6 (Y+R=4.0 sec)	Average Delay (sec/veh):	xxxxxx
Optimal Cycle:	47	Level Of Service:	C

Street Name:	Brookhurst Street						Pacific Coast HIghway					
Approach:	North Bound			South Bound			East Bound			West Bound		
Movement:	L - T - R			L - T - R			L - T - R			L - T - R		
Control:	Split Phase			Split Phase			Protected			Protected		
Rights:	Include			Include			Include			Ovl		
Min. Green:	0	0	0	0	0	0	0	0	0	0	0	0
Lanes:	1 0 0 1 0			2 0 1 0 1			1 0 3 0 1			1 0 3 0 1		
Volume Module:												
Base Vol:	8	23	17	324	6	179	182	797	2	13	1871	757
Growth Adj:	1.07	1.07	1.07	1.07	1.07	1.07	1.07	1.07	1.07	1.07	1.07	1.07
Initial Bse:	9	25	18	347	6	192	195	854	2	14	2006	812
Added Vol:	0	0	0	84	0	0	0	114	0	0	71	61
Committed P:	0	0	0	14	0	0	0	42	0	0	71	24
Initial Fut:	9	25	18	445	6	192	195	1010	2	14	2148	897
User Adj:	1.00	1.00	1.00	1.00	1.00	1.00	1.00	1.00	1.00	1.00	1.00	1.00
PHF Adj:	1.00	1.00	1.00	1.00	1.00	1.00	1.00	1.00	1.00	1.00	1.00	1.00
PHF Volume:	9	25	18	445	6	192	195	1010	2	14	2148	897
Reduct Vol:	0	0	0	0	0	0	0	0	0	0	0	0
Reduced Vol:	9	25	18	445	6	192	195	1010	2	14	2148	897
PCE Adj:	1.00	1.00	1.00	1.00	1.00	1.00	1.00	1.00	1.00	1.00	1.00	1.00
MLF Adj:	1.00	1.00	1.00	1.00	1.00	1.00	1.00	1.00	1.00	1.00	1.00	1.00
FinalVolume:	9	25	18	445	6	192	195	1010	2	14	2148	897
OvlAdjVol:												674
Saturation Flow Module:												
Sat/Lane:	1600	1600	1600	1600	1600	1600	1600	1600	1600	1600	1600	1600
Adjustment:	1.06	1.06	1.06	1.06	1.06	1.06	1.06	1.06	1.06	1.06	1.06	1.06
Lanes:	1.00	0.57	0.43	2.00	1.00	1.00	1.00	3.00	1.00	1.00	3.00	1.00
Final Sat.:	1700	978	723	3400	1700	1700	1700	5100	1700	1700	5100	1700
Capacity Analysis Module:												
Vol/Sat:	0.01	0.03	0.03	0.13	0.00	0.11	0.11	0.20	0.00	0.01	0.42	0.53
OvlAdjV/S:												0.40
Crit Moves:			****	****			****				****	

Newport Banning Ranch
Year 2016 with Project Bluff Road Alternative - TPO Analysis
PM Peak Hour

Level Of Service Computation Report
ICU 1(Loss as Cycle Length %) Method (Future Volume Alternative)

Intersection #22 Placentia Ave/Victoria St

Cycle (sec):	100	Critical Vol./Cap.(X):	0.863
Loss Time (sec):	0 (Y+R=4.0 sec)	Average Delay (sec/veh):	xxxxxx
Optimal Cycle:	166	Level Of Service:	D

Street Name:	Placentia Avenue						Victoria Street					
Approach:	North Bound			South Bound			East Bound			West Bound		
Movement:	L - T - R			L - T - R			L - T - R			L - T - R		
Control:	Protected			Protected			Protected			Protected		
Rights:	Include			Include			Ovl			Include		
Min. Green:	0	0	0	0	0	0	0	0	0	0	0	0
Lanes:	2 0 2 0 1			1 0 2 0 1			1 0 2 0 1			1 0 2 0 1		
Volume Module:												
Base Vol:	520	674	157	103	490	152	71	587	306	166	1376	87
Growth Adj:	1.07	1.07	1.07	1.07	1.07	1.07	1.07	1.07	1.07	1.07	1.07	1.07
Initial Bse:	557	723	168	110	525	163	76	629	328	178	1475	93
Added Vol:	0	34	0	0	51	0	0	0	1	0	0	0
Committed P:	0	0	0	0	0	0	0	0	0	0	0	0
Initial Fut:	557	757	168	110	576	163	76	629	329	178	1475	93
User Adj:	1.00	1.00	1.00	1.00	1.00	1.00	1.00	1.00	1.00	1.00	1.00	1.00
PHF Adj:	1.00	1.00	1.00	1.00	1.00	1.00	1.00	1.00	1.00	1.00	1.00	1.00
PHF Volume:	557	757	168	110	576	163	76	629	329	178	1475	93
Reduct Vol:	0	0	0	0	0	0	0	0	0	0	0	0
Reduced Vol:	557	757	168	110	576	163	76	629	329	178	1475	93
PCE Adj:	1.00	1.00	1.00	1.00	1.00	1.00	1.00	1.00	1.00	1.00	1.00	1.00
MLF Adj:	1.00	1.00	1.00	1.00	1.00	1.00	1.00	1.00	1.00	1.00	1.00	1.00
FinalVolume:	557	757	168	110	576	163	76	629	329	178	1475	93
OvlAdjVol:									50			
Saturation Flow Module:												
Sat/Lane:	1600	1600	1600	1600	1600	1600	1600	1600	1600	1600	1600	1600
Adjustment:	1.00	1.00	1.00	1.00	1.00	1.00	1.00	1.00	1.00	1.00	1.00	1.00
Lanes:	2.00	2.00	1.00	1.00	2.00	1.00	1.00	2.00	1.00	1.00	2.00	1.00
Final Sat.:	3200	3200	1600	1600	3200	1600	1600	3200	1600	1600	3200	1600
Capacity Analysis Module:												
Vol/Sat:	0.17	0.24	0.11	0.07	0.18	0.10	0.05	0.20	0.21	0.11	0.46	0.06
OvlAdjV/S:									0.03			
Crit Moves:	****				****		****				****	

Newport Banning Ranch
Year 2016 with Project Bluff Road Alternative - TPO Analysis
PM Peak Hour

Level Of Service Computation Report
ICU 1(Loss as Cycle Length %) Method (Future Volume Alternative)

Intersection #23 Pomona Ave/Victoria St

Cycle (sec):	100	Critical Vol./Cap.(X):	0.711
Loss Time (sec):	0 (Y+R=4.0 sec)	Average Delay (sec/veh):	xxxxxx
Optimal Cycle:	50	Level Of Service:	C

Street Name:	Pomona Avenue						Victoria Street					
Approach:	North Bound			South Bound			East Bound			West Bound		
Movement:	L - T - R			L - T - R			L - T - R			L - T - R		
Control:	Permitted			Permitted			Permitted			Permitted		
Rights:	Include			Include			Include			Include		
Min. Green:	0	0	0	0	0	0	0	0	0	0	0	0
Lanes:	1 0 0	1 0		0 1 0	1 0		0 1 0	1 0		2 0 1	1 0	
Volume Module:												
Base Vol:	50	138	119	20	145	28	21	806	79	118	1526	29
Growth Adj:	1.07	1.07	1.07	1.07	1.07	1.07	1.07	1.07	1.07	1.07	1.07	1.07
Initial Bse:	54	148	128	21	155	30	23	864	85	126	1636	31
Added Vol:	0	0	0	0	0	0	0	0	0	0	0	0
Committed P:	0	0	0	0	0	0	0	0	0	0	0	0
Initial Fut:	54	148	128	21	155	30	23	864	85	126	1636	31
User Adj:	1.00	1.00	1.00	1.00	1.00	1.00	1.00	1.00	1.00	1.00	1.00	1.00
PHF Adj:	1.00	1.00	1.00	1.00	1.00	1.00	1.00	1.00	1.00	1.00	1.00	1.00
PHF Volume:	54	148	128	21	155	30	23	864	85	126	1636	31
Reduct Vol:	0	0	0	0	0	0	0	0	0	0	0	0
Reduced Vol:	54	148	128	21	155	30	23	864	85	126	1636	31
PCE Adj:	1.00	1.00	1.00	1.00	1.00	1.00	1.00	1.00	1.00	1.00	1.00	1.00
MLF Adj:	1.00	1.00	1.00	1.00	1.00	1.00	1.00	1.00	1.00	1.00	1.00	1.00
FinalVolume:	54	148	128	21	155	30	23	864	85	126	1636	31
Saturation Flow Module:												
Sat/Lane:	1600	1600	1600	1600	1600	1600	1600	1600	1600	1600	1600	1600
Adjustment:	1.00	1.00	1.00	1.00	1.00	1.00	1.00	1.00	1.00	1.00	1.00	1.00
Lanes:	1.00	0.54	0.46	1.00	0.84	0.16	1.00	2.00	1.00	1.00	2.00	1.00
Final Sat.:	1600	859	741	1600	1341	259	1600	3200	1600	1600	3200	1600
Capacity Analysis Module:												
Vol/Sat:	0.03	0.17	0.17	0.01	0.12	0.12	0.01	0.27	0.05	0.08	0.51	0.02
Crit Moves:		****		****			****				****	

Newport Banning Ranch
Year 2016 with Project Bluff Road Alternative - TPO Analysis
PM Peak Hour

Level Of Service Computation Report
ICU 1(Loss as Cycle Length %) Method (Future Volume Alternative)

Intersection #24 Harbor Blvd/Victoria St

Cycle (sec):	100	Critical Vol./Cap.(X):	0.847
Loss Time (sec):	0 (Y+R=4.0 sec)	Average Delay (sec/veh):	xxxxxx
Optimal Cycle:	149	Level Of Service:	D

Street Name:	Harbor Boulevard						Victoria Street					
Approach:	North Bound			South Bound			East Bound			West Bound		
Movement:	L - T - R			L - T - R			L - T - R			L - T - R		
Control:	Protected			Protected			Protected			Protected		
Rights:	Include			Ovl			Include			Include		
Min. Green:	0	0	0	0	0	0	0	0	0	0	0	0
Lanes:	1 0 3 0 1			1 0 3 0 1			2 0 1 1 0			2 0 2 0 1		
Volume Module:												
Base Vol:	118	1081	124	142	1116	294	269	639	80	121	1212	159
Growth Adj:	1.07	1.07	1.07	1.07	1.07	1.07	1.07	1.07	1.07	1.07	1.07	1.07
Initial Bse:	126	1159	133	152	1196	315	288	685	86	130	1299	170
Added Vol:	0	69	0	0	104	0	0	0	0	0	0	0
Committed P:	0	0	0	0	0	0	0	0	0	0	0	0
Initial Fut:	126	1228	133	152	1300	315	288	685	86	130	1299	170
User Adj:	1.00	1.00	1.00	1.00	1.00	1.00	1.00	1.00	1.00	1.00	1.00	1.00
PHF Adj:	1.00	1.00	1.00	1.00	1.00	1.00	1.00	1.00	1.00	1.00	1.00	1.00
PHF Volume:	126	1228	133	152	1300	315	288	685	86	130	1299	170
Reduct Vol:	0	0	0	0	0	0	0	0	0	0	0	0
Reduced Vol:	126	1228	133	152	1300	315	288	685	86	130	1299	170
PCE Adj:	1.00	1.00	1.00	1.00	1.00	1.00	1.00	1.00	1.00	1.00	1.00	1.00
MLF Adj:	1.00	1.00	1.00	1.00	1.00	1.00	1.00	1.00	1.00	1.00	1.00	1.00
FinalVolume:	126	1228	133	152	1300	315	288	685	86	130	1299	170
OvlAdjVol:						171						
Saturation Flow Module:												
Sat/Lane:	1600	1600	1600	1600	1600	1600	1600	1600	1600	1600	1600	1600
Adjustment:	1.00	1.00	1.00	1.00	1.00	1.00	1.00	1.00	1.00	1.00	1.00	1.00
Lanes:	1.00	3.00	1.00	1.00	3.00	1.00	2.00	1.78	0.22	2.00	2.00	1.00
Final Sat.:	1600	4800	1600	1600	4800	1600	3200	2844	356	3200	3200	1600
Capacity Analysis Module:												
Vol/Sat:	0.08	0.26	0.08	0.10	0.27	0.20	0.09	0.24	0.24	0.04	0.41	0.11
OvlAdjV/S:						0.11						
Crit Moves:		****		****			****				****	

Newport Banning Ranch
Year 2016 with Project Bluff Road Alternative - TPO Analysis
PM Peak Hour

Level Of Service Computation Report
ICU 1(Loss as Cycle Length %) Method (Future Volume Alternative)

Intersection #25 Newport Blvd/Victoria St [Ramp]

Cycle (sec):	120	Critical Vol./Cap.(X):	0.482
Loss Time (sec):	0 (Y+R=4.0 sec)	Average Delay (sec/veh):	xxxxxx
Optimal Cycle:	36	Level Of Service:	A

Street Name:	Newport Boulevard									Victoria Street								
Approach:	North Bound						South Bound						East Bound						West Bound					
Movement:	L	-	T	-	R		L	-	T	-	R		L	-	T	-	R		L	-	T	-	R	
Control:	Permitted						Permitted						Protected						Protected					
Rights:	Include						Ignore						Include						Include					
Min. Green:	0	0	0				0	0	0				0	0	0				0	0	0			
Lanes:	0	0	0	0	0		1	1	2	0	1		0	0	2	1	0		1	0	1	0	0	
Volume Module:																								
Base Vol:	0	0	0				590	911	1230				0	765	36				77	233	0			
Growth Adj:	1.07	1.07	1.07				1.07	1.07	1.07				1.07	1.07	1.07				1.07	1.07	1.07			
Initial Bse:	0	0	0				632	977	1319				0	820	39				83	250	0			
Added Vol:	0	0	0				0	0	0				0	0	0				0	0	0			
Committed P:	0	0	0				0	0	0				0	0	0				0	0	0			
Initial Fut:	0	0	0				632	977	1319				0	820	39				83	250	0			
User Adj:	1.00	1.00	1.00				1.00	1.00	0.00				1.00	1.00	1.00				1.00	1.00	1.00			
PHF Adj:	1.00	1.00	1.00				1.00	1.00	0.00				1.00	1.00	1.00				1.00	1.00	1.00			
PHF Volume:	0	0	0				632	977	0				0	820	39				83	250	0			
Reduct Vol:	0	0	0				0	0	0				0	0	0				0	0	0			
Reduced Vol:	0	0	0				632	977	0				0	820	39				83	250	0			
PCE Adj:	1.00	1.00	1.00				1.00	1.00	0.00				1.00	1.00	1.00				1.00	1.00	1.00			
MLF Adj:	1.00	1.00	1.00				1.00	1.00	0.00				1.00	1.00	1.00				1.00	1.00	1.00			
FinalVolume:	0	0	0				632	977	0				0	820	39				83	250	0			
Saturation Flow Module:																								
Sat/Lane:	1600	1600	1600				1600	1600	1600				1600	1600	1600				1600	1600	1600			
Adjustment:	1.00	1.00	1.00				1.00	1.00	1.00				1.00	1.00	1.00				1.00	1.00	1.00			
Lanes:	0.00	0.00	0.00				1.57	2.43	1.00				0.00	2.87	0.13				1.00	1.00	0.00			
Final Sat.:	0	0	0				2516	3884	1600				0	4584	216				1600	1600	0			
Capacity Analysis Module:																								
Vol/Sat:	0.00	0.00	0.00				0.25	0.25	0.00				0.00	0.18	0.18				0.05	0.16	0.00			
Crit Moves:							****							****					****					

Newport Banning Ranch
Year 2016 with Project Bluff Road Alternative - TPO Analysis
PM Peak Hour

Level Of Service Computation Report
ICU 1(Loss as Cycle Length %) Method (Future Volume Alternative)

Intersection #26 Newport Blvd /Victoria St (22nd St) [Ramp]

Cycle (sec):	120	Critical Vol./Cap.(X):	0.608
Loss Time (sec):	0 (Y+R=4.0 sec)	Average Delay (sec/veh):	xxxxxx
Optimal Cycle:	47	Level Of Service:	B

Street Name:	Newport Boulevard						Victoria Street (22nd Street)					
Approach:	North Bound			South Bound			East Bound			West Bound		
Movement:	L - T - R			L - T - R			L - T - R			L - T - R		
Control:	Permitted			Permitted			Protected			Protected		
Rights:	Include			Include			Include			Include		
Min. Green:	0	0	0	0	0	0	0	0	0	0	0	0
Lanes:	0 1 2	0 1		0 0 0	0 0		2 0 2	0 0		0 0 1	0 1	
Volume Module:												
Base Vol:	109	907	92	0	0	0	734	601	0	0	202	203
Growth Adj:	1.07	1.07	1.07	1.07	1.07	1.07	1.07	1.07	1.07	1.07	1.07	1.07
Initial Bse:	117	972	99	0	0	0	787	644	0	0	217	218
Added Vol:	0	0	0	0	0	0	0	0	0	0	0	0
Committed P:	0	0	0	0	0	0	0	0	0	0	0	0
Initial Fut:	117	972	99	0	0	0	787	644	0	0	217	218
User Adj:	1.00	1.00	1.00	1.00	1.00	1.00	1.00	1.00	1.00	1.00	1.00	1.00
PHF Adj:	1.00	1.00	1.00	1.00	1.00	1.00	1.00	1.00	1.00	1.00	1.00	1.00
PHF Volume:	117	972	99	0	0	0	787	644	0	0	217	218
Reduct Vol:	0	0	0	0	0	0	0	0	0	0	0	0
Reduced Vol:	117	972	99	0	0	0	787	644	0	0	217	218
PCE Adj:	1.00	1.00	1.00	1.00	1.00	1.00	1.00	1.00	1.00	1.00	1.00	1.00
MLF Adj:	1.00	1.00	1.00	1.00	1.00	1.00	1.00	1.00	1.00	1.00	1.00	1.00
FinalVolume:	117	972	99	0	0	0	787	644	0	0	217	218
Saturation Flow Module:												
Sat/Lane:	1600	1600	1600	1600	1600	1600	1600	1600	1600	1600	1600	1600
Adjustment:	1.00	1.00	1.00	1.00	1.00	1.00	1.00	1.00	1.00	1.00	1.00	1.00
Lanes:	0.32	2.68	1.00	0.00	0.00	0.00	2.00	2.00	0.00	0.00	1.00	1.00
Final Sat.:	515	4285	1600	0	0	0	3200	3200	0	0	1600	1600
Capacity Analysis Module:												
Vol/Sat:	0.07	0.23	0.06	0.00	0.00	0.00	0.25	0.20	0.00	0.00	0.14	0.14
Crit Moves:		****					****				****	

Newport Banning Ranch
Year 2016 with Project Bluff Road Alternative - TPO Analysis
PM Peak Hour

Level Of Service Computation Report
2000 HCM 4-Way Stop Method (Future Volume Alternative)

Intersection #27 Whittier Ave/19th St

Cycle (sec):	100	Critical Vol./Cap.(X):	0.290
Loss Time (sec):	0 (Y+R=4.0 sec)	Average Delay (sec/veh):	9.2
Optimal Cycle:	0	Level Of Service:	A

Street Name:	Whittier Avenue						19th St					
Approach:	North Bound			South Bound			East Bound			West Bound		
Movement:	L -	T -	R	L -	T -	R	L -	T -	R	L -	T -	R
Control:	Stop Sign			Stop Sign			Stop Sign			Stop Sign		
Rights:	Include			Include			Include			Include		
Min. Green:	0	0	0	0	0	0	0	0	0	0	0	0
Lanes:	0 0	1! 0	0	0 1	0 0	0	1 0	0 1	0	1 0	0 1	0
Volume Module:												
Base Vol:	32	6	175	17	4	0	1	66	11	146	97	18
Growth Adj:	1.07	1.07	1.07	1.07	1.07	1.07	1.07	1.07	1.07	1.07	1.07	1.07
Initial Bse:	34	6	188	18	4	0	1	71	12	157	104	19
Added Vol:	0	0	0	0	0	0	0	0	0	0	0	0
Committed P:	0	0	0	0	0	0	0	0	0	0	0	0
Initial Fut:	34	6	188	18	4	0	1	71	12	157	104	19
User Adj:	1.00	1.00	1.00	1.00	1.00	1.00	1.00	1.00	1.00	1.00	1.00	1.00
PHF Adj:	1.00	1.00	1.00	1.00	1.00	1.00	1.00	1.00	1.00	1.00	1.00	1.00
PHF Volume:	34	6	188	18	4	0	1	71	12	157	104	19
Reduct Vol:	0	0	0	0	0	0	0	0	0	0	0	0
Reduced Vol:	34	6	188	18	4	0	1	71	12	157	104	19
PCE Adj:	1.00	1.00	1.00	1.00	1.00	1.00	1.00	1.00	1.00	1.00	1.00	1.00
MLF Adj:	1.00	1.00	1.00	1.00	1.00	1.00	1.00	1.00	1.00	1.00	1.00	1.00
FinalVolume:	34	6	188	18	4	0	1	71	12	157	104	19
Saturation Flow Module:												
Adjustment:	1.00	1.00	1.00	1.00	1.00	1.00	1.00	1.00	1.00	1.00	1.00	1.00
Lanes:	0.15	0.03	0.82	0.81	0.19	0.00	1.00	0.86	0.14	1.00	0.84	0.16
Final Sat.:	118	22	647	521	123	0	588	560	93	620	583	108
Capacity Analysis Module:												
Vol/Sat:	0.29	0.29	0.29	0.03	0.03	xxxx	0.00	0.13	0.13	0.25	0.18	0.18
Crit Moves:		****			****			****			****	
Delay/Veh:	9.0	9.0	9.0	8.4	8.4	0.0	8.6	8.7	8.7	10.2	8.8	8.8
Delay Adj:	1.00	1.00	1.00	1.00	1.00	1.00	1.00	1.00	1.00	1.00	1.00	1.00
AdjDel/Veh:	9.0	9.0	9.0	8.4	8.4	0.0	8.6	8.7	8.7	10.2	8.8	8.8
LOS by Move:	A	A	A	A	A	*	A	A	A	B	A	A
ApproachDel:		9.0			8.4			8.7			9.6	
Delay Adj:		1.00			1.00			1.00			1.00	
ApprAdjDel:		9.0			8.4			8.7			9.6	
LOS by Appr:		A			A			A			A	
AllWayAvgQ:	0.4	0.4	0.4	0.0	0.0	0.0	0.0	0.1	0.1	0.3	0.2	0.2

Newport Banning Ranch
Year 2016 with Project Bluff Road Alternative - TPO Analysis
PM Peak Hour

Note: Queue reported is the number of cars per lane.

Newport Banning Ranch
Year 2016 with Project Bluff Road Alternative - TPO Analysis
PM Peak Hour

Level Of Service Computation Report
2000 HCM 4-Way Stop Method (Future Volume Alternative)

Intersection #28 Monrovia Ave/19th St

Cycle (sec):	100	Critical Vol./Cap.(X):	0.545
Loss Time (sec):	0 (Y+R=4.0 sec)	Average Delay (sec/veh):	14.0
Optimal Cycle:	0	Level Of Service:	B

Street Name:	Monrovia Avenue						19th Street					
Approach:	North Bound			South Bound			East Bound			West Bound		
Movement:	L -	T -	R	L -	T -	R	L -	T -	R	L -	T -	R
Control:	Stop Sign			Stop Sign			Stop Sign			Stop Sign		
Rights:	Include			Include			Include			Include		
Min. Green:	0	0	0	0	0	0	0	0	0	0	0	0
Lanes:	0 1	0 0	1	0 0	1!	0 0	1	0 1	0 1	1	0 1	0 1
Volume Module:												
Base Vol:	14	25	243	50	9	3	6	259	9	124	255	50
Growth Adj:	1.07	1.07	1.07	1.07	1.07	1.07	1.07	1.07	1.07	1.07	1.07	1.07
Initial Bse:	15	27	260	54	10	3	6	278	10	133	273	54
Added Vol:	0	0	0	0	0	0	0	0	0	0	0	0
Committed P:	0	0	0	0	0	0	0	0	0	0	0	0
Initial Fut:	15	27	260	54	10	3	6	278	10	133	273	54
User Adj:	1.00	1.00	1.00	1.00	1.00	1.00	1.00	1.00	1.00	1.00	1.00	1.00
PHF Adj:	1.00	1.00	1.00	1.00	1.00	1.00	1.00	1.00	1.00	1.00	1.00	1.00
PHF Volume:	15	27	260	54	10	3	6	278	10	133	273	54
Reduct Vol:	0	0	0	0	0	0	0	0	0	0	0	0
Reduced Vol:	15	27	260	54	10	3	6	278	10	133	273	54
PCE Adj:	1.00	1.00	1.00	1.00	1.00	1.00	1.00	1.00	1.00	1.00	1.00	1.00
MLF Adj:	1.00	1.00	1.00	1.00	1.00	1.00	1.00	1.00	1.00	1.00	1.00	1.00
FinalVolume:	15	27	260	54	10	3	6	278	10	133	273	54
Saturation Flow Module:												
Adjustment:	1.00	1.00	1.00	1.00	1.00	1.00	1.00	1.00	1.00	1.00	1.00	1.00
Lanes:	0.36	0.64	1.00	0.81	0.14	0.05	1.00	1.00	1.00	1.00	1.00	1.00
Final Sat.:	179	319	573	364	65	22	469	509	557	495	535	591
Capacity Analysis Module:												
Vol/Sat:	0.08	0.08	0.45	0.15	0.15	0.15	0.01	0.55	0.02	0.27	0.51	0.09
Crit Moves:			****		****			****			****	
Delay/Veh:	10.2	10.2	13.2	11.4	11.4	11.4	10.1	16.8	8.9	12.1	15.4	9.1
Delay Adj:	1.00	1.00	1.00	1.00	1.00	1.00	1.00	1.00	1.00	1.00	1.00	1.00
AdjDel/Veh:	10.2	10.2	13.2	11.4	11.4	11.4	10.1	16.8	8.9	12.1	15.4	9.1
LOS by Move:	B	B	B	B	B	B	B	C	A	B	C	A
ApproachDel:	12.7			11.4			16.4			13.7		
Delay Adj:	1.00			1.00			1.00			1.00		
ApprAdjDel:	12.7			11.4			16.4			13.7		
LOS by Appr:	B			B			C			B		
AllWayAvgQ:	0.1	0.1	0.7	0.1	0.1	0.1	0.0	1.0	0.0	0.3	0.9	0.1

Newport Banning Ranch
Year 2016 with Project Bluff Road Alternative - TPO Analysis
PM Peak Hour

Note: Queue reported is the number of cars per lane.
****

Newport Banning Ranch
Year 2016 with Project Bluff Road Alternative - TPO Analysis
PM Peak Hour

Level Of Service Computation Report
ICU 1(Loss as Cycle Length %) Method (Future Volume Alternative)

Intersection #29 Placentia Ave/19th St

Cycle (sec):	100	Critical Vol./Cap.(X):	0.747
Loss Time (sec):	0 (Y+R=4.0 sec)	Average Delay (sec/veh):	xxxxxx
Optimal Cycle:	90	Level Of Service:	C

Street Name:	Placentia Avenue						19th Street					
Approach:	North Bound			South Bound			East Bound			West Bound		
Movement:	L - T - R			L - T - R			L - T - R			L - T - R		
Control:	Protected			Protected			Protected			Protected		
Rights:	Include			Include			Include			Include		
Min. Green:	0	0	0	0	0	0	0	0	0	0	0	0
Lanes:	1 0 2	0 1		1 0 1	1 0		2 0 1	1 0		2 0 2	0 1	
Volume Module:												
Base Vol:	49	863	246	206	565	221	306	600	56	248	405	281
Growth Adj:	1.07	1.07	1.07	1.07	1.07	1.07	1.07	1.07	1.07	1.07	1.07	1.07
Initial Bse:	53	925	264	221	606	237	328	643	60	266	434	301
Added Vol:	0	34	10	0	52	0	0	0	0	17	0	0
Committed P:	1	5	1	0	0	0	0	0	0	0	0	0
Initial Fut:	54	964	275	221	658	237	328	643	60	283	434	301
User Adj:	1.00	1.00	1.00	1.00	1.00	1.00	1.00	1.00	1.00	1.00	1.00	1.00
PHF Adj:	1.00	1.00	1.00	1.00	1.00	1.00	1.00	1.00	1.00	1.00	1.00	1.00
PHF Volume:	54	964	275	221	658	237	328	643	60	283	434	301
Reduct Vol:	0	0	0	0	0	0	0	0	0	0	0	0
Reduced Vol:	54	964	275	221	658	237	328	643	60	283	434	301
PCE Adj:	1.00	1.00	1.00	1.00	1.00	1.00	1.00	1.00	1.00	1.00	1.00	1.00
MLF Adj:	1.00	1.00	1.00	1.00	1.00	1.00	1.00	1.00	1.00	1.00	1.00	1.00
FinalVolume:	54	964	275	221	658	237	328	643	60	283	434	301
Saturation Flow Module:												
Sat/Lane:	1600	1600	1600	1600	1600	1600	1600	1600	1600	1600	1600	1600
Adjustment:	1.00	1.00	1.00	1.00	1.00	1.00	1.00	1.00	1.00	1.00	1.00	1.00
Lanes:	1.00	2.00	1.00	1.00	1.47	0.53	2.00	1.83	0.17	2.00	2.00	1.00
Final Sat.:	1600	3200	1600	1600	2353	847	3200	2927	273	3200	3200	1600
Capacity Analysis Module:												
Vol/Sat:	0.03	0.30	0.17	0.14	0.28	0.28	0.10	0.22	0.22	0.09	0.14	0.19
Crit Moves:		****		****				****		****		

Newport Banning Ranch
Year 2016 with Project Bluff Road Alternative - TPO Analysis
PM Peak Hour

Level Of Service Computation Report
ICU 1(Loss as Cycle Length %) Method (Future Volume Alternative)

Intersection #30 Pomona Ave/19th St

Cycle (sec):	100	Critical Vol./Cap.(X):	0.612
Loss Time (sec):	0 (Y+R=4.0 sec)	Average Delay (sec/veh):	xxxxxx
Optimal Cycle:	59	Level Of Service:	B

Street Name:	Pomona Avenue						19th Street					
Approach:	North Bound			South Bound			East Bound			West Bound		
Movement:	L - T - R			L - T - R			L - T - R			L - T - R		
Control:	Protected			Protected			Prot+Permit			Prot+Permit		
Rights:	Include			Include			Include			Include		
Min. Green:	0	0	0	0	0	0	0	0	0	0	0	0
Lanes:	1 0 0 1 0			1 0 0 1 0			1 0 1 1 0			1 0 1 1 0		
Volume Module:												
Base Vol:	50	125	110	63	98	55	40	922	47	127	809	59
Growth Adj:	1.07	1.07	1.07	1.07	1.07	1.07	1.07	1.07	1.07	1.07	1.07	1.07
Initial Bse:	54	134	118	68	105	59	43	988	50	136	867	63
Added Vol:	0	0	0	0	0	0	0	10	0	0	17	0
Committed P:	0	0	0	0	0	0	0	0	0	0	0	0
Initial Fut:	54	134	118	68	105	59	43	998	50	136	884	63
User Adj:	1.00	1.00	1.00	1.00	1.00	1.00	1.00	1.00	1.00	1.00	1.00	1.00
PHF Adj:	1.00	1.00	1.00	1.00	1.00	1.00	1.00	1.00	1.00	1.00	1.00	1.00
PHF Volume:	54	134	118	68	105	59	43	998	50	136	884	63
Reduct Vol:	0	0	0	0	0	0	0	0	0	0	0	0
Reduced Vol:	54	134	118	68	105	59	43	998	50	136	884	63
PCE Adj:	1.00	1.00	1.00	1.00	1.00	1.00	1.00	1.00	1.00	1.00	1.00	1.00
MLF Adj:	1.00	1.00	1.00	1.00	1.00	1.00	1.00	1.00	1.00	1.00	1.00	1.00
FinalVolume:	54	134	118	68	105	59	43	998	50	136	884	63
Saturation Flow Module:												
Sat/Lane:	1600	1600	1600	1600	1600	1600	1600	1600	1600	1600	1600	1600
Adjustment:	1.00	1.00	1.00	1.00	1.00	1.00	1.00	1.00	1.00	1.00	1.00	1.00
Lanes:	1.00	0.53	0.47	1.00	0.64	0.36	1.00	1.90	0.10	1.00	1.87	0.13
Final Sat.:	1600	851	749	1600	1025	575	1600	3046	154	1600	2986	214
Capacity Analysis Module:												
Vol/Sat:	0.03	0.16	0.16	0.04	0.10	0.10	0.03	0.33	0.33	0.09	0.30	0.30
Crit Moves:		****		****				****		****		

Newport Banning Ranch
Year 2016 with Project Bluff Road Alternative - TPO Analysis
PM Peak Hour

Level Of Service Computation Report
ICU 1(Loss as Cycle Length %) Method (Future Volume Alternative)

Intersection #31 Anaheim Ave/19th St

Cycle (sec):	100	Critical Vol./Cap.(X):	0.587
Loss Time (sec):	0 (Y+R=4.0 sec)	Average Delay (sec/veh):	xxxxxx
Optimal Cycle:	45	Level Of Service:	A

Street Name:	Anaheim Avenue						19th Street					
Approach:	North Bound			South Bound			East Bound			West Bound		
Movement:	L - T - R			L - T - R			L - T - R			L - T - R		
Control:	Permitted			Permitted			Prot+Permit			Prot+Permit		
Rights:	Include			Include			Include			Include		
Min. Green:	0	0	0	0	0	0	0	0	0	0	0	0
Lanes:	1 0 0	1 0		0 1 0	1 0		0 1 0	1 0		1 1 0	1 0	
Volume Module:												
Base Vol:	61	60	97	59	48	26	45	1023	53	118	947	109
Growth Adj:	1.07	1.07	1.07	1.07	1.07	1.07	1.07	1.07	1.07	1.07	1.07	1.07
Initial Bse:	65	64	104	63	51	28	48	1097	57	126	1015	117
Added Vol:	0	0	0	0	0	0	0	10	0	0	17	0
Committed P:	0	0	0	0	0	0	0	0	0	0	0	0
Initial Fut:	65	64	104	63	51	28	48	1107	57	126	1032	117
User Adj:	1.00	1.00	1.00	1.00	1.00	1.00	1.00	1.00	1.00	1.00	1.00	1.00
PHF Adj:	1.00	1.00	1.00	1.00	1.00	1.00	1.00	1.00	1.00	1.00	1.00	1.00
PHF Volume:	65	64	104	63	51	28	48	1107	57	126	1032	117
Reduct Vol:	0	0	0	0	0	0	0	0	0	0	0	0
Reduced Vol:	65	64	104	63	51	28	48	1107	57	126	1032	117
PCE Adj:	1.00	1.00	1.00	1.00	1.00	1.00	1.00	1.00	1.00	1.00	1.00	1.00
MLF Adj:	1.00	1.00	1.00	1.00	1.00	1.00	1.00	1.00	1.00	1.00	1.00	1.00
FinalVolume:	65	64	104	63	51	28	48	1107	57	126	1032	117
Saturation Flow Module:												
Sat/Lane:	1600	1600	1600	1600	1600	1600	1600	1600	1600	1600	1600	1600
Adjustment:	1.00	1.00	1.00	1.00	1.00	1.00	1.00	1.00	1.00	1.00	1.00	1.00
Lanes:	1.00	0.38	0.62	1.00	0.65	0.35	1.00	1.90	0.10	1.00	2.00	1.00
Final Sat.:	1600	611	989	1600	1038	562	1600	3044	156	1600	3200	1600
Capacity Analysis Module:												
Vol/Sat:	0.04	0.11	0.11	0.04	0.05	0.05	0.03	0.36	0.36	0.08	0.32	0.07
Crit Moves:		****		****				****		****		

Newport Banning Ranch
Year 2016 with Project Bluff Road Alternative - TPO Analysis
PM Peak Hour

Level Of Service Computation Report
ICU 1(Loss as Cycle Length %) Method (Future Volume Alternative)

Intersection #32 Park Ave/19th St

Cycle (sec):	100	Critical Vol./Cap.(X):	0.586
Loss Time (sec):	0 (Y+R=4.0 sec)	Average Delay (sec/veh):	xxxxxx
Optimal Cycle:	45	Level Of Service:	A

Street Name:	Park Avenue						19th St					
Approach:	North Bound			South Bound			East Bound			West Bound		
Movement:	L - T - R			L - T - R			L - T - R			L - T - R		
Control:	Permitted			Permitted			Prot+Permit			Prot+Permit		
Rights:	Include			Include			Include			Include		
Min. Green:	0	0	0	0	0	0	0	0	0	0	0	0
Lanes:	2 0 0 0 1			0 0 0 0 0			1 0 2 0 1			1 0 3 0 0		
Volume Module:												
Base Vol:	119	0	153	0	0	0	20	1069	70	183	1034	0
Growth Adj:	1.07	1.07	1.07	1.07	1.07	1.07	1.07	1.07	1.07	1.07	1.07	1.07
Initial Bse:	128	0	164	0	0	0	21	1146	75	196	1108	0
Added Vol:	0	0	0	0	0	0	0	10	0	0	17	0
Committed P:	0	0	0	0	0	0	0	0	0	0	0	0
Initial Fut:	128	0	164	0	0	0	21	1156	75	196	1125	0
User Adj:	1.00	1.00	1.00	1.00	1.00	1.00	1.00	1.00	1.00	1.00	1.00	1.00
PHF Adj:	1.00	1.00	1.00	1.00	1.00	1.00	1.00	1.00	1.00	1.00	1.00	1.00
PHF Volume:	128	0	164	0	0	0	21	1156	75	196	1125	0
Reduct Vol:	0	0	0	0	0	0	0	0	0	0	0	0
Reduced Vol:	128	0	164	0	0	0	21	1156	75	196	1125	0
PCE Adj:	1.00	1.00	1.00	1.00	1.00	1.00	1.00	1.00	1.00	1.00	1.00	1.00
MLF Adj:	1.00	1.00	1.00	1.00	1.00	1.00	1.00	1.00	1.00	1.00	1.00	1.00
FinalVolume:	128	0	164	0	0	0	21	1156	75	196	1125	0
Saturation Flow Module:												
Sat/Lane:	1600	1600	1600	1600	1600	1600	1600	1600	1600	1600	1600	1600
Adjustment:	1.00	1.00	1.00	1.00	1.00	1.00	1.00	1.00	1.00	1.00	1.00	1.00
Lanes:	2.00	0.00	1.00	0.00	0.00	0.00	1.00	2.00	1.00	1.00	3.00	0.00
Final Sat.:	3200	0	1600	0	0	0	1600	3200	1600	1600	4800	0
Capacity Analysis Module:												
Vol/Sat:	0.04	0.00	0.10	0.00	0.00	0.00	0.01	0.36	0.05	0.12	0.23	0.00
Crit Moves:			****					****		****		

Newport Banning Ranch
Year 2016 with Project Bluff Road Alternative - TPO Analysis
PM Peak Hour

Level Of Service Computation Report
ICU 1(Loss as Cycle Length %) Method (Future Volume Alternative)

Intersection #33 Harbor Blvd/19th St

Cycle (sec):	100	Critical Vol./Cap.(X):	0.628
Loss Time (sec):	0 (Y+R=4.0 sec)	Average Delay (sec/veh):	xxxxxx
Optimal Cycle:	61	Level Of Service:	B

Street Name:	Harbor Boulevard						19th Street					
Approach:	North Bound			South Bound			East Bound			West Bound		
Movement:	L - T - R			L - T - R			L - T - R			L - T - R		
Control:	Protected			Protected			Protected			Protected		
Rights:	Include			Include			Include			Include		
Min. Green:	0	0	0	0	0	0	0	0	0	0	0	0
Lanes:	1 0 2	1 0		1 0 2	0 1		2 0 2	1 0		1 0 3	0 1	
Volume Module:												
Base Vol:	75	453	23	183	614	317	481	749	65	188	791	215
Growth Adj:	1.06	1.06	1.06	1.06	1.06	1.06	1.06	1.06	1.06	1.06	1.06	1.06
Initial Bse:	80	481	24	194	652	336	511	795	69	200	840	228
Added Vol:	0	59	0	0	87	17	10	0	0	0	0	0
Committed P:	3	11	0	0	24	0	0	0	6	0	0	0
Initial Fut:	83	551	24	194	763	353	521	795	75	200	840	228
User Adj:	1.00	1.00	1.00	1.00	1.00	1.00	1.00	1.00	1.00	1.00	1.00	1.00
PHF Adj:	1.00	1.00	1.00	1.00	1.00	1.00	1.00	1.00	1.00	1.00	1.00	1.00
PHF Volume:	83	551	24	194	763	353	521	795	75	200	840	228
Reduct Vol:	0	0	0	0	0	0	0	0	0	0	0	0
Reduced Vol:	83	551	24	194	763	353	521	795	75	200	840	228
PCE Adj:	1.00	1.00	1.00	1.00	1.00	1.00	1.00	1.00	1.00	1.00	1.00	1.00
MLF Adj:	1.00	1.00	1.00	1.00	1.00	1.00	1.00	1.00	1.00	1.00	1.00	1.00
FinalVolume:	83	551	24	194	763	353	521	795	75	200	840	228
Saturation Flow Module:												
Sat/Lane:	1600	1600	1600	1600	1600	1600	1600	1600	1600	1600	1600	1600
Adjustment:	1.00	1.00	1.00	1.00	1.00	1.00	1.00	1.00	1.00	1.00	1.00	1.00
Lanes:	1.00	2.87	0.13	1.00	2.00	1.00	2.00	2.74	0.26	1.00	3.00	1.00
Final Sat.:	1600	4596	204	1600	3200	1600	3200	4386	414	1600	4800	1600
Capacity Analysis Module:												
Vol/Sat:	0.05	0.12	0.12	0.12	0.24	0.22	0.16	0.18	0.18	0.12	0.17	0.14
Crit Moves:	****				****		****				****	

Newport Banning Ranch
Year 2016 with Project Bluff Road Alternative - TPO Analysis
PM Peak Hour

Level Of Service Computation Report
ICU 1(Loss as Cycle Length %) Method (Future Volume Alternative)

Intersection #34 Newport Blvd/19th St

Cycle (sec):	120	Critical Vol./Cap.(X):	0.872
Loss Time (sec):	0 (Y+R=4.0 sec)	Average Delay (sec/veh):	xxxxxx
Optimal Cycle:	178	Level Of Service:	D

Street Name:	Newport Boulevard									19th Street								
Approach:	North Bound			South Bound			East Bound			West Bound		
Movement:	L	- T	- R	L	- T	- R	L	- T	- R	L	- T	- R
Control:	Protected			Protected			Split Phase			Split Phase		
Rights:	Include			Include			Include			Include		
Min. Green:	0	0	0	0	0	0	0	0	0	0	0	0
Lanes:	1 0	3 1	0	1 0	3 1	1	2 1	1 0	1	1 0	2 1	1
Volume Module:												
Base Vol:	65	2649	38	202	3114	757	731	171	33	54	321	152
Growth Adj:	1.07	1.07	1.07	1.07	1.07	1.07	1.07	1.07	1.07	1.07	1.07	1.07
Initial Bse:	70	2840	41	217	3338	812	784	183	35	58	344	163
Added Vol:	0	259	0	0	389	0	0	0	0	0	0	0
Committed P:	0	21	0	0	31	0	0	0	11	0	0	0
Initial Fut:	70	3120	41	217	3758	812	784	183	46	58	344	163
User Adj:	1.00	1.00	1.00	1.00	1.00	1.00	1.00	1.00	1.00	1.00	1.00	1.00
PHF Adj:	1.00	1.00	1.00	1.00	1.00	1.00	1.00	1.00	1.00	1.00	1.00	1.00
PHF Volume:	70	3120	41	217	3758	812	784	183	46	58	344	163
Reduct Vol:	0	0	0	0	0	0	0	0	0	0	0	0
Reduced Vol:	70	3120	41	217	3758	812	784	183	46	58	344	163
PCE Adj:	1.00	1.00	1.00	1.00	1.00	1.00	1.00	1.00	1.00	1.00	1.00	1.00
MLF Adj:	1.00	1.00	1.00	1.00	1.00	1.00	1.00	1.00	1.00	1.00	1.00	1.00
FinalVolume:	70	3120	41	217	3758	812	784	183	46	58	344	163
Saturation Flow Module:												
Sat/Lane:	1600	1600	1600	1600	1600	1600	1600	1600	1600	1600	1600	1600
Adjustment:	1.00	1.00	1.00	1.00	1.00	1.00	1.00	1.00	1.00	1.00	1.00	1.00
Lanes:	1.00	3.95	0.05	1.00	4.00	1.00	3.00	1.00	1.00	1.00	2.71	1.29
Final Sat.:	1600	6318	82	1600	6400	1600	4800	1600	1600	1600	4343	2057
Capacity Analysis Module:												
Vol/Sat:	0.04	0.49	0.49	0.14	0.59	0.51	0.16	0.11	0.03	0.04	0.08	0.08
Crit Moves:		****		****			****				****	

Newport Banning Ranch
Year 2016 with Project Bluff Road Alternative - TPO Analysis
PM Peak Hour

Level Of Service Computation Report
ICU 1(Loss as Cycle Length %) Method (Future Volume Alternative)

Intersection #35 Newport Blvd/Broadway

Cycle (sec):	120	Critical Vol./Cap.(X):	0.865
Loss Time (sec):	0 (Y+R=4.0 sec)	Average Delay (sec/veh):	xxxxxx
Optimal Cycle:	138	Level Of Service:	D

Street Name:	Newport Boulevard									Broadway								
Approach:	North Bound				South Bound				East Bound					West Bound				
Movement:	L	-	T	-	R	L	-	T	-	R	L	-	T	-	R	L	-	T	-	R
Control:	Protected					Protected					Permitted					Permitted				
Rights:	Include					Include					Include					Include				
Min. Green:	0	0	0			0	0	0			0	0	0			0	0	0		
Lanes:	1	0	3	1	0	1	0	3	0	1	0	1	0	0	1	1	0	0	1	0
Volume Module:																				
Base Vol:	7	2542		55		142	3061		62		18		23		14	33		15		95
Growth Adj:	1.07	1.07		1.07		1.07	1.07		1.07		1.07		1.07		1.07	1.07		1.07		1.07
Initial Bse:	8	2725		59		152	3281		66		19		25		15	35		16		102
Added Vol:	0	259		0		0	389		0		0		0		0	0		0		0
Committed P:	0	25		0		0	48		0		0		0		0	0		0		0
Initial Fut:	8	3009		59		152	3718		66		19		25		15	35		16		102
User Adj:	1.00	1.00		1.00		1.00	1.00		1.00		1.00		1.00		1.00	1.00		1.00		1.00
PHF Adj:	1.00	1.00		1.00		1.00	1.00		1.00		1.00		1.00		1.00	1.00		1.00		1.00
PHF Volume:	8	3009		59		152	3718		66		19		25		15	35		16		102
Reduct Vol:	0	0		0		0	0		0		0		0		0	0		0		0
Reduced Vol:	8	3009		59		152	3718		66		19		25		15	35		16		102
PCE Adj:	1.00	1.00		1.00		1.00	1.00		1.00		1.00		1.00		1.00	1.00		1.00		1.00
MLF Adj:	1.00	1.00		1.00		1.00	1.00		1.00		1.00		1.00		1.00	1.00		1.00		1.00
FinalVolume:	8	3009		59		152	3718		66		19		25		15	35		16		102
Saturation Flow Module:																				
Sat/Lane:	1600	1600		1600		1600	1600		1600		1600		1600		1600	1600		1600		1600
Adjustment:	1.00	1.00		1.00		1.00	1.00		1.00		1.00		1.00		1.00	1.00		1.00		1.00
Lanes:	1.00	3.92		0.08		1.00	3.00		1.00		0.44		0.56		1.00	1.00		0.14		0.86
Final Sat.:	1600	6277		123		1600	4800		1600		702		898		1600	1600		218		1382
Capacity Analysis Module:																				
Vol/Sat:	0.00	0.48		0.48		0.10	0.77		0.04		0.01		0.03		0.01	0.02		0.07		0.07
Crit Moves:	****						****				****							****		

Newport Banning Ranch
Year 2016 with Project Bluff Road Alternative - TPO Analysis
PM Peak Hour

Level Of Service Computation Report
ICU 1(Loss as Cycle Length %) Method (Future Volume Alternative)

Intersection #36 Newport Blvd/Harbor Blvd

Cycle (sec):	120	Critical Vol./Cap.(X):	1.161
Loss Time (sec):	0 (Y+R=4.0 sec)	Average Delay (sec/veh):	xxxxxx
Optimal Cycle:	180	Level Of Service:	F

Street Name:	Newport Boulevard						Harbor Boulevard					
Approach:	North Bound			South Bound			East Bound			West Bound		
Movement:	L - T - R			L - T - R			L - T - R			L - T - R		
Control:	Protected			Protected			Protected			Protected		
Rights:	Include			Include			Ovl			Include		
Min. Green:	0	0	0	0	0	0	0	0	0	0	0	0
Lanes:	2 0 4 0 0			0 0 2 1 0			1 0 0 0 2			0 0 0 0 0		
Volume Module:												
Base Vol:	726	2480	0	0	3160	50	123	0	537	0	0	0
Growth Adj:	1.07	1.07	1.07	1.07	1.07	1.07	1.07	1.07	1.07	1.07	1.07	1.07
Initial Bse:	778	2659	0	0	3388	54	132	0	576	0	0	0
Added Vol:	59	259	0	0	389	0	0	0	87	0	0	0
Committed P:	27	28	0	0	51	0	0	0	50	0	0	0
Initial Fut:	864	2946	0	0	3828	54	132	0	713	0	0	0
User Adj:	1.00	1.00	1.00	1.00	1.00	1.00	1.00	1.00	1.00	1.00	1.00	1.00
PHF Adj:	1.00	1.00	1.00	1.00	1.00	1.00	1.00	1.00	1.00	1.00	1.00	1.00
PHF Volume:	864	2946	0	0	3828	54	132	0	713	0	0	0
Reduct Vol:	0	0	0	0	0	0	0	0	0	0	0	0
Reduced Vol:	864	2946	0	0	3828	54	132	0	713	0	0	0
PCE Adj:	1.00	1.00	1.00	1.00	1.00	1.00	1.00	1.00	1.00	1.00	1.00	1.00
MLF Adj:	1.00	1.00	1.00	1.00	1.00	1.00	1.00	1.00	1.00	1.00	1.00	1.00
FinalVolume:	864	2946	0	0	3828	54	132	0	713	0	0	0
OvlAdjVol:									0			
Saturation Flow Module:												
Sat/Lane:	1600	1600	1600	1600	1600	1600	1600	1600	1600	1600	1600	1600
Adjustment:	1.00	1.00	1.00	1.00	1.00	1.00	1.00	1.00	1.00	1.00	1.00	1.00
Lanes:	2.00	4.00	0.00	0.00	2.96	0.04	1.00	0.00	2.00	0.00	0.00	0.00
Final Sat.:	3200	6400	0	0	4734	66	1600	0	3200	0	0	0
Capacity Analysis Module:												
Vol/Sat:	0.27	0.46	0.00	0.00	0.81	0.81	0.08	0.00	0.22	0.00	0.00	0.00
OvlAdjV/S:									0.00			
Crit Moves:	****				****		****					

Newport Banning Ranch
Year 2016 with Project Bluff Road Alternative - TPO Analysis
PM Peak Hour

Level Of Service Computation Report
ICU 1(Loss as Cycle Length %) Method (Future Volume Alternative)

Intersection #37 Newport Blvd/18th St (Rochester St)

Cycle (sec):	120	Critical Vol./Cap.(X):	1.173
Loss Time (sec):	0 (Y+R=4.0 sec)	Average Delay (sec/veh):	xxxxxx
Optimal Cycle:	180	Level Of Service:	F

Street Name:	Newport Boulevard						18th Street (Rochester Street)					
Approach:	North Bound			South Bound			East Bound			West Bound		
Movement:	L - T - R			L - T - R			L - T - R			L - T - R		
Control:	Protected			Protected			Split Phase			Split Phase		
Rights:	Include			Include			Include			Include		
Min. Green:	0	0	0	0	0	0	0	0	0	0	0	0
Lanes:	1 0 3 1 0			1 0 3 0 1			2 0 1 0 1			1 0 0 1 0		
Volume Module:												
Base Vol:	111	2724	15	125	3515	144	251	75	48	18	124	22
Growth Adj:	1.07	1.07	1.07	1.07	1.07	1.07	1.07	1.07	1.07	1.07	1.07	1.07
Initial Bse:	119	2920	16	134	3768	154	269	80	51	19	133	24
Added Vol:	0	253	0	0	382	94	66	0	0	0	0	0
Committed P:	14	68	0	0	111	0	0	0	21	0	0	0
Initial Fut:	133	3241	16	134	4261	248	335	80	72	19	133	24
User Adj:	1.00	1.00	1.00	1.00	1.00	1.00	1.00	1.00	1.00	1.00	1.00	1.00
PHF Adj:	1.00	1.00	1.00	1.00	1.00	1.00	1.00	1.00	1.00	1.00	1.00	1.00
PHF Volume:	133	3241	16	134	4261	248	335	80	72	19	133	24
Reduct Vol:	0	0	0	0	0	0	0	0	0	0	0	0
Reduced Vol:	133	3241	16	134	4261	248	335	80	72	19	133	24
PCE Adj:	1.00	1.00	1.00	1.00	1.00	1.00	1.00	1.00	1.00	1.00	1.00	1.00
MLF Adj:	1.00	1.00	1.00	1.00	1.00	1.00	1.00	1.00	1.00	1.00	1.00	1.00
FinalVolume:	133	3241	16	134	4261	248	335	80	72	19	133	24
Saturation Flow Module:												
Sat/Lane:	1600	1600	1600	1600	1600	1600	1600	1600	1600	1600	1600	1600
Adjustment:	1.00	1.00	1.00	1.00	1.00	1.00	1.00	1.00	1.00	1.00	1.00	1.00
Lanes:	1.00	3.98	0.02	1.00	3.00	1.00	2.00	1.00	1.00	1.00	0.85	0.15
Final Sat.:	1600	6368	32	1600	4800	1600	3200	1600	1600	1600	1359	241
Capacity Analysis Module:												
Vol/Sat:	0.08	0.51	0.51	0.08	0.89	0.16	0.10	0.05	0.05	0.01	0.10	0.10
Crit Moves:	****				****		****					****

Newport Banning Ranch
Year 2016 with Project Bluff Road Alternative - TPO Analysis
PM Peak Hour

Level Of Service Computation Report
ICU 1(Loss as Cycle Length %) Method (Future Volume Alternative)

Intersection #38 Placentia Ave/18th St

Cycle (sec):	100	Critical Vol./Cap.(X):	0.564
Loss Time (sec):	0 (Y+R=4.0 sec)	Average Delay (sec/veh):	xxxxxx
Optimal Cycle:	43	Level Of Service:	A

Street Name:	Placentia Avenue						18th Street					
Approach:	North Bound			South Bound			East Bound			West Bound		
Movement:	L - T - R			L - T - R			L - T - R			L - T - R		
Control:	Protected			Protected			Permitted			Permitted		
Rights:	Include			Include			Include			Include		
Min. Green:	0	0	0	0	0	0	0	0	0	0	0	0
Lanes:	1 0 1	1 0		1 0 1	1 0		1 0 0	1 0		1 0 0	1 0	
Volume Module:												
Base Vol:	14	889	58	45	523	47	60	169	27	16	87	80
Growth Adj:	1.07	1.07	1.07	1.07	1.07	1.07	1.07	1.07	1.07	1.07	1.07	1.07
Initial Bse:	15	953	62	48	561	50	64	181	29	17	93	86
Added Vol:	0	8	0	0	-25	0	0	66	0	0	94	0
Committed P:	1	10	1	0	1	0	0	0	0	0	0	0
Initial Fut:	16	971	63	48	537	50	64	247	29	17	187	86
User Adj:	1.00	1.00	1.00	1.00	1.00	1.00	1.00	1.00	1.00	1.00	1.00	1.00
PHF Adj:	1.00	1.00	1.00	1.00	1.00	1.00	1.00	1.00	1.00	1.00	1.00	1.00
PHF Volume:	16	971	63	48	537	50	64	247	29	17	187	86
Reduct Vol:	0	0	0	0	0	0	0	0	0	0	0	0
Reduced Vol:	16	971	63	48	537	50	64	247	29	17	187	86
PCE Adj:	1.00	1.00	1.00	1.00	1.00	1.00	1.00	1.00	1.00	1.00	1.00	1.00
MLF Adj:	1.00	1.00	1.00	1.00	1.00	1.00	1.00	1.00	1.00	1.00	1.00	1.00
FinalVolume:	16	971	63	48	537	50	64	247	29	17	187	86
Saturation Flow Module:												
Sat/Lane:	1600	1600	1600	1600	1600	1600	1600	1600	1600	1600	1600	1600
Adjustment:	1.00	1.00	1.00	1.00	1.00	1.00	1.00	1.00	1.00	1.00	1.00	1.00
Lanes:	1.00	1.88	0.12	1.00	1.83	0.17	1.00	0.90	0.10	1.00	0.69	0.31
Final Sat.:	1600	3005	195	1600	2925	275	1600	1432	168	1600	1097	503
Capacity Analysis Module:												
Vol/Sat:	0.01	0.32	0.32	0.03	0.18	0.18	0.04	0.17	0.17	0.01	0.17	0.17
Crit Moves:		****		****			****				****	

Newport Banning Ranch
Year 2016 with Project Bluff Road Alternative - TPO Analysis
PM Peak Hour

Level Of Service Computation Report
2000 HCM 4-Way Stop Method (Future Volume Alternative)

Intersection #39 Whittier Ave/17th St

Cycle (sec):	100	Critical Vol./Cap.(X):	0.597
Loss Time (sec):	0 (Y+R=4.0 sec)	Average Delay (sec/veh):	12.4
Optimal Cycle:	0	Level Of Service:	B

Street Name:	Whittier Avenue						17th St					
Approach:	North Bound			South Bound			East Bound			West Bound		
Movement:	L -	T -	R	L -	T -	R	L -	T -	R	L -	T -	R
Control:	Stop Sign			Stop Sign			Stop Sign			Stop Sign		
Rights:	Include			Include			Include			Include		
Min. Green:	0	0	0	0	0	0	0	0	0	0	0	0
Lanes:	0 0	0 1	0	0 0	1! 0	0	0 1	0 0	0	0 0	1! 0	0
Volume Module:												
Base Vol:	0	11	8	62	9	3	2	14	0	14	9	83
Growth Adj:	1.07	1.07	1.07	1.07	1.07	1.07	1.07	1.07	1.07	1.07	1.07	1.07
Initial Bse:	0	12	9	66	10	3	2	15	0	15	10	89
Added Vol:	0	0	0	0	0	94	66	212	0	0	335	0
Committed P:	0	0	0	0	0	0	0	0	0	0	0	0
Initial Fut:	0	12	9	66	10	97	68	227	0	15	345	89
User Adj:	1.00	1.00	1.00	1.00	1.00	1.00	1.00	1.00	1.00	1.00	1.00	1.00
PHF Adj:	1.00	1.00	1.00	1.00	1.00	1.00	1.00	1.00	1.00	1.00	1.00	1.00
PHF Volume:	0	12	9	66	10	97	68	227	0	15	345	89
Reduct Vol:	0	0	0	0	0	0	0	0	0	0	0	0
Reduced Vol:	0	12	9	66	10	97	68	227	0	15	345	89
PCE Adj:	1.00	1.00	1.00	1.00	1.00	1.00	1.00	1.00	1.00	1.00	1.00	1.00
MLF Adj:	1.00	1.00	1.00	1.00	1.00	1.00	1.00	1.00	1.00	1.00	1.00	1.00
FinalVolume:	0	12	9	66	10	97	68	227	0	15	345	89
Saturation Flow Module:												
Adjustment:	1.00	1.00	1.00	1.00	1.00	1.00	1.00	1.00	1.00	1.00	1.00	1.00
Lanes:	0.00	0.58	0.42	0.38	0.06	0.56	0.23	0.77	0.00	0.03	0.77	0.20
Final Sat.:	0	314	229	236	34	345	161	536	0	25	578	149
Capacity Analysis Module:												
Vol/Sat:	xxxx	0.04	0.04	0.28	0.28	0.28	0.42	0.42	xxxx	0.60	0.60	0.60
Crit Moves:			****		****			****			****	
Delay/Veh:	0.0	8.8	8.8	10.2	10.2	10.2	11.4	11.4	0.0	14.0	14.0	14.0
Delay Adj:	1.00	1.00	1.00	1.00	1.00	1.00	1.00	1.00	1.00	1.00	1.00	1.00
AdjDel/Veh:	0.0	8.8	8.8	10.2	10.2	10.2	11.4	11.4	0.0	14.0	14.0	14.0
LOS by Move:	*	A	A	B	B	B	B	B	*	B	B	B
ApproachDel:		8.8			10.2			11.4			14.0	
Delay Adj:		1.00			1.00			1.00			1.00	
ApprAdjDel:		8.8			10.2			11.4			14.0	
LOS by Appr:		A			B			B			B	
AllWayAvgQ:	0.0	0.0	0.0	0.3	0.3	0.3	0.7	0.7	0.7	1.3	1.3	1.3

Newport Banning Ranch
Year 2016 with Project Bluff Road Alternative - TPO Analysis
PM Peak Hour

Note: Queue reported is the number of cars per lane.

Newport Banning Ranch
Year 2016 with Project Bluff Road Alternative - TPO Analysis
PM Peak Hour

Level Of Service Computation Report
2000 HCM 4-Way Stop Method (Future Volume Alternative)

Intersection #40 Monrovia Ave/17th St

Cycle (sec):	100	Critical Vol./Cap.(X):	0.717
Loss Time (sec):	0 (Y+R=4.0 sec)	Average Delay (sec/veh):	17.3
Optimal Cycle:	0	Level Of Service:	C

Street Name:	Monrovia Avenue						17th Street					
Approach:	North Bound			South Bound			East Bound			West Bound		
Movement:	L -	T -	R	L -	T -	R	L -	T -	R	L -	T -	R
Control:	Stop Sign			Stop Sign			Stop Sign			Stop Sign		
Rights:	Include			Include			Include			Include		
Min. Green:	0	0	0	0	0	0	0	0	0	0	0	0
Lanes:	0 0	1! 0	0	0 0	1! 0	0	0 0	1! 0	0	0 0	1! 0	0
Volume Module:												
Base Vol:	25	120	46	43	65	12	14	79	43	21	77	47
Growth Adj:	1.07	1.07	1.07	1.07	1.07	1.07	1.07	1.07	1.07	1.07	1.07	1.07
Initial Bse:	27	129	49	46	70	13	15	85	46	23	83	50
Added Vol:	0	20	0	-21	53	63	24	188	0	0	272	-8
Committed P:	0	0	0	0	0	0	0	0	0	0	0	0
Initial Fut:	27	149	49	25	123	76	39	273	46	23	355	42
User Adj:	1.00	1.00	1.00	1.00	1.00	1.00	1.00	1.00	1.00	1.00	1.00	1.00
PHF Adj:	1.00	1.00	1.00	1.00	1.00	1.00	1.00	1.00	1.00	1.00	1.00	1.00
PHF Volume:	27	149	49	25	123	76	39	273	46	23	355	42
Reduct Vol:	0	0	0	0	0	0	0	0	0	0	0	0
Reduced Vol:	27	149	49	25	123	76	39	273	46	23	355	42
PCE Adj:	1.00	1.00	1.00	1.00	1.00	1.00	1.00	1.00	1.00	1.00	1.00	1.00
MLF Adj:	1.00	1.00	1.00	1.00	1.00	1.00	1.00	1.00	1.00	1.00	1.00	1.00
FinalVolume:	27	149	49	25	123	76	39	273	46	23	355	42
Saturation Flow Module:												
Adjustment:	1.00	1.00	1.00	1.00	1.00	1.00	1.00	1.00	1.00	1.00	1.00	1.00
Lanes:	0.12	0.66	0.22	0.11	0.55	0.34	0.11	0.76	0.13	0.05	0.85	0.10
Final Sat.:	59	327	108	56	273	169	62	432	73	31	494	59
Capacity Analysis Module:												
Vol/Sat:	0.46	0.46	0.46	0.45	0.45	0.45	0.63	0.63	0.63	0.72	0.72	0.72
Crit Moves:	****					****		****		****		
Delay/Veh:	13.8	13.8	13.8	13.6	13.6	13.6	17.6	17.6	17.6	21.0	21.0	21.0
Delay Adj:	1.00	1.00	1.00	1.00	1.00	1.00	1.00	1.00	1.00	1.00	1.00	1.00
AdjDel/Veh:	13.8	13.8	13.8	13.6	13.6	13.6	17.6	17.6	17.6	21.0	21.0	21.0
LOS by Move:	B	B	B	B	B	B	C	C	C	C	C	C
ApproachDel:	13.8			13.6			17.6			21.0		
Delay Adj:	1.00			1.00			1.00			1.00		
ApprAdjDel:	13.8			13.6			17.6			21.0		
LOS by Appr:	B			B			C			C		
AllWayAvgQ:	0.6	0.6	0.6	0.6	0.6	0.6	1.3	1.3	1.3	2.0	2.0	2.0

Newport Banning Ranch
Year 2016 with Project Bluff Road Alternative - TPO Analysis
PM Peak Hour

Note: Queue reported is the number of cars per lane.
****

Newport Banning Ranch
Year 2016 with Project Bluff Road Alternative - TPO Analysis
PM Peak Hour

Level Of Service Computation Report
ICU 1(Loss as Cycle Length %) Method (Future Volume Alternative)

Intersection #41 Placentia Ave/17th St

Cycle (sec):	100	Critical Vol./Cap.(X):	0.708
Loss Time (sec):	0 (Y+R=4.0 sec)	Average Delay (sec/veh):	xxxxxx
Optimal Cycle:	49	Level Of Service:	C

Street Name:	Placentia Avenue						17th St					
Approach:	North Bound			South Bound			East Bound			West Bound		
Movement:	L - T - R			L - T - R			L - T - R			L - T - R		
Control:	Permitted			Permitted			Permitted			Permitted		
Rights:	Include			Include			Include			Include		
Min. Green:	0	0	0	0	0	0	0	0	0	0	0	0
Lanes:	1 0 1	1 0		1 0 1	1 0		1 0 0	1 0		1 0 0	1 0	
Volume Module:												
Base Vol:	49	668	69	113	387	26	52	151	34	37	108	187
Growth Adj:	1.07	1.07	1.07	1.07	1.07	1.07	1.07	1.07	1.07	1.07	1.07	1.07
Initial Bse:	53	716	74	121	415	28	56	162	36	40	116	200
Added Vol:	-8	-27	0	0	-83	57	35	153	-21	0	214	0
Committed P:	4	15	4	0	4	0	0	0	2	0	0	0
Initial Fut:	49	704	78	121	336	85	91	315	17	40	330	200
User Adj:	1.00	1.00	1.00	1.00	1.00	1.00	1.00	1.00	1.00	1.00	1.00	1.00
PHF Adj:	1.00	1.00	1.00	1.00	1.00	1.00	1.00	1.00	1.00	1.00	1.00	1.00
PHF Volume:	49	704	78	121	336	85	91	315	17	40	330	200
Reduct Vol:	0	0	0	0	0	0	0	0	0	0	0	0
Reduced Vol:	49	704	78	121	336	85	91	315	17	40	330	200
PCE Adj:	1.00	1.00	1.00	1.00	1.00	1.00	1.00	1.00	1.00	1.00	1.00	1.00
MLF Adj:	1.00	1.00	1.00	1.00	1.00	1.00	1.00	1.00	1.00	1.00	1.00	1.00
FinalVolume:	49	704	78	121	336	85	91	315	17	40	330	200
Saturation Flow Module:												
Sat/Lane:	1600	1600	1600	1600	1600	1600	1600	1600	1600	1600	1600	1600
Adjustment:	1.00	1.00	1.00	1.00	1.00	1.00	1.00	1.00	1.00	1.00	1.00	1.00
Lanes:	1.00	1.80	0.20	1.00	1.60	0.40	1.00	0.95	0.05	1.00	0.62	0.38
Final Sat.:	1600	2881	319	1600	2554	646	1600	1516	84	1600	995	605
Capacity Analysis Module:												
Vol/Sat:	0.03	0.24	0.24	0.08	0.13	0.13	0.06	0.21	0.21	0.02	0.33	0.33
Crit Moves:		****		****			****				****	

Newport Banning Ranch
Year 2016 with Project Bluff Road Alternative - TPO Analysis
PM Peak Hour

Level Of Service Computation Report
2000 HCM 4-Way Stop Method (Future Volume Alternative)

Intersection #42 Pomona Ave/17th St

Cycle (sec):	100	Critical Vol./Cap.(X):	1.051
Loss Time (sec):	0 (Y+R=4.0 sec)	Average Delay (sec/veh):	51.3
Optimal Cycle:	0	Level Of Service:	F

Street Name:	Pomona Avenue						17th Street					
Approach:	North Bound			South Bound			East Bound			West Bound		
Movement:	L -	T -	R	L -	T -	R	L -	T -	R	L -	T -	R
Control:	Stop Sign			Stop Sign			Stop Sign			Stop Sign		
Rights:	Include			Include			Include			Include		
Min. Green:	0	0	0	0	0	0	0	0	0	0	0	0
Lanes:	0 0	1! 0	0	0 0	1! 0	0	1 0	0 1	0	1 0	1 0	1
Volume Module:												
Base Vol:	20	130	53	65	86	32	52	308	16	43	297	102
Growth Adj:	1.07	1.07	1.07	1.07	1.07	1.07	1.07	1.07	1.07	1.07	1.07	1.07
Initial Bse:	21	139	57	70	92	34	56	330	17	46	318	109
Added Vol:	0	0	0	0	0	0	0	153	0	0	214	0
Committed P:	0	0	0	0	0	0	0	0	0	0	0	0
Initial Fut:	21	139	57	70	92	34	56	483	17	46	532	109
User Adj:	1.00	1.00	1.00	1.00	1.00	1.00	1.00	1.00	1.00	1.00	1.00	1.00
PHF Adj:	1.00	1.00	1.00	1.00	1.00	1.00	1.00	1.00	1.00	1.00	1.00	1.00
PHF Volume:	21	139	57	70	92	34	56	483	17	46	532	109
Reduct Vol:	0	0	0	0	0	0	0	0	0	0	0	0
Reduced Vol:	21	139	57	70	92	34	56	483	17	46	532	109
PCE Adj:	1.00	1.00	1.00	1.00	1.00	1.00	1.00	1.00	1.00	1.00	1.00	1.00
MLF Adj:	1.00	1.00	1.00	1.00	1.00	1.00	1.00	1.00	1.00	1.00	1.00	1.00
FinalVolume:	21	139	57	70	92	34	56	483	17	46	532	109
Saturation Flow Module:												
Adjustment:	1.00	1.00	1.00	1.00	1.00	1.00	1.00	1.00	1.00	1.00	1.00	1.00
Lanes:	0.10	0.64	0.26	0.36	0.47	0.17	1.00	0.97	0.03	1.00	1.00	1.00
Final Sat.:	45	294	120	159	210	78	467	485	17	472	506	561
Capacity Analysis Module:												
Vol/Sat:	0.47	0.47	0.47	0.44	0.44	0.44	0.12	1.00	1.00	0.10	1.05	0.19
Crit Moves:		****		****				****			****	
Delay/Veh:	17.2	17.2	17.2	16.6	16.6	16.6	11.4	65.8	65.8	11.1	80.5	10.7
Delay Adj:	1.00	1.00	1.00	1.00	1.00	1.00	1.00	1.00	1.00	1.00	1.00	1.00
AdjDel/Veh:	17.2	17.2	17.2	16.6	16.6	16.6	11.4	65.8	65.8	11.1	80.5	10.7
LOS by Move:	C	C	C	C	C	C	B	F	F	B	F	B
ApproachDel:		17.2			16.6			60.4			64.8	
Delay Adj:		1.00			1.00			1.00			1.00	
ApprAdjDel:		17.2			16.6			60.4			64.8	
LOS by Appr:		C			C			F			F	
AllWayAvgQ:	0.8	0.8	0.8	0.7	0.7	0.7	0.1	7.8	7.8	0.1	9.9	0.2

Newport Banning Ranch
Year 2016 with Project Bluff Road Alternative - TPO Analysis
PM Peak Hour

Note: Queue reported is the number of cars per lane.
****

Newport Banning Ranch
Year 2016 with Project Bluff Road Alternative - TPO Analysis
PM Peak Hour

Level Of Service Computation Report
ICU 1(Loss as Cycle Length %) Method (Future Volume Alternative)

Intersection #43 Superior Ave/17th St

Cycle (sec):	100	Critical Vol./Cap.(X):	1.008
Loss Time (sec):	0 (Y+R=4.0 sec)	Average Delay (sec/veh):	xxxxxx
Optimal Cycle:	180	Level Of Service:	F

Street Name:	Superior Avenue						17th Street					
Approach:	North Bound			South Bound			East Bound			West Bound		
Movement:	L - T - R			L - T - R			L - T - R			L - T - R		
Control:	Prot+Permit			Prot+Permit			Prot+Permit			Prot+Permit		
Rights:	Include			Include			Include			Include		
Min. Green:	0	0	0	0	0	0	0	0	0	0	0	0
Lanes:	1 0 0 1 1			1 0 1 1 0			1 0 1 1 0			1 0 1 1 0		
Volume Module:												
Base Vol:	100	184	620	89	287	84	25	497	65	423	436	81
Growth Adj:	1.07	1.07	1.07	1.07	1.07	1.07	1.07	1.07	1.07	1.07	1.07	1.07
Initial Bse:	107	197	665	95	308	90	27	533	70	453	467	87
Added Vol:	0	0	116	0	0	0	0	153	0	179	214	0
Committed P:	3	25	0	0	101	0	0	0	11	0	0	0
Initial Fut:	110	222	781	95	409	90	27	686	81	632	681	87
User Adj:	1.00	1.00	1.00	1.00	1.00	1.00	1.00	1.00	1.00	1.00	1.00	1.00
PHF Adj:	1.00	1.00	1.00	1.00	1.00	1.00	1.00	1.00	1.00	1.00	1.00	1.00
PHF Volume:	110	222	781	95	409	90	27	686	81	632	681	87
Reduct Vol:	0	0	0	0	0	0	0	0	0	0	0	0
Reduced Vol:	110	222	781	95	409	90	27	686	81	632	681	87
PCE Adj:	1.00	1.00	1.00	1.00	1.00	1.00	1.00	1.00	1.00	1.00	1.00	1.00
MLF Adj:	1.00	1.00	1.00	1.00	1.00	1.00	1.00	1.00	1.00	1.00	1.00	1.00
FinalVolume:	110	222	781	95	409	90	27	686	81	632	681	87
Saturation Flow Module:												
Sat/Lane:	1600	1600	1600	1600	1600	1600	1600	1600	1600	1600	1600	1600
Adjustment:	1.00	1.00	1.00	1.00	1.00	1.00	1.00	1.00	1.00	1.00	1.00	1.00
Lanes:	1.00	0.44	1.56	1.00	1.64	0.36	1.00	1.79	0.21	1.00	1.77	0.23
Final Sat.:	1600	709	2491	1600	2622	578	1600	2863	337	1600	2838	362
Capacity Analysis Module:												
Vol/Sat:	0.07	0.31	0.31	0.06	0.16	0.16	0.02	0.24	0.24	0.40	0.24	0.24
Crit Moves:		****		****				****		****		

Newport Banning Ranch
Year 2016 with Project Bluff Road Alternative - TPO Analysis
PM Peak Hour

Level Of Service Computation Report
ICU 1(Loss as Cycle Length %) Method (Future Volume Alternative)

Intersection #44 Newport Blvd/17th St

Cycle (sec):	120	Critical Vol./Cap.(X):	0.928
Loss Time (sec):	0 (Y+R=4.0 sec)	Average Delay (sec/veh):	xxxxxx
Optimal Cycle:	180	Level Of Service:	E

Street Name:	Newport Boulevard									17th Street								
Approach:	North Bound			South Bound			East Bound			West Bound		
Movement:	L	- T	- R	L	- T	- R	L	- T	- R	L	- T	- R
Control:	Protected			Protected			Protected			Protected		
Rights:	Include			Include			Include			Include		
Min. Green:	0	0	0	0	0	0	0	0	0	0	0	0
Lanes:	1 0	3 1	0	2 0	3 0	1	3 0	1 1	0	2 0	3 0	1
Volume Module:												
Base Vol:	63	1820	169	714	2315	347	707	393	22	276	485	201
Growth Adj:	1.07	1.07	1.07	1.07	1.07	1.07	1.07	1.07	1.07	1.07	1.07	1.07
Initial Bse:	68	1951	181	765	2482	372	758	421	24	296	520	215
Added Vol:	0	36	13	0	64	318	217	52	0	23	75	0
Committed P:	0	67	0	0	51	0	0	0	0	0	0	0
Initial Fut:	68	2054	194	765	2597	690	975	473	24	319	595	215
User Adj:	1.00	1.00	1.00	1.00	1.00	1.00	1.00	1.00	1.00	1.00	1.00	1.00
PHF Adj:	1.00	1.00	1.00	1.00	1.00	1.00	1.00	1.00	1.00	1.00	1.00	1.00
PHF Volume:	68	2054	194	765	2597	690	975	473	24	319	595	215
Reduct Vol:	0	0	0	0	0	0	0	0	0	0	0	0
Reduced Vol:	68	2054	194	765	2597	690	975	473	24	319	595	215
PCE Adj:	1.00	1.00	1.00	1.00	1.00	1.00	1.00	1.00	1.00	1.00	1.00	1.00
MLF Adj:	1.00	1.00	1.00	1.00	1.00	1.00	1.00	1.00	1.00	1.00	1.00	1.00
FinalVolume:	68	2054	194	765	2597	690	975	473	24	319	595	215
Saturation Flow Module:												
Sat/Lane:	1600	1600	1600	1600	1600	1600	1600	1600	1600	1600	1600	1600
Adjustment:	1.00	1.00	1.00	1.00	1.00	1.00	1.00	1.00	1.00	1.00	1.00	1.00
Lanes:	1.00	3.65	0.35	2.00	3.00	1.00	3.00	1.91	0.09	2.00	3.00	1.00
Final Sat.:	1600	5847	553	3200	4800	1600	4800	3048	152	3200	4800	1600
Capacity Analysis Module:												
Vol/Sat:	0.04	0.35	0.35	0.24	0.54	0.43	0.20	0.16	0.16	0.10	0.12	0.13
Crit Moves:		****		****			****					****

Newport Banning Ranch
Year 2016 with Project Bluff Road Alternative - TPO Analysis
PM Peak Hour

Level Of Service Computation Report
ICU 1(Loss as Cycle Length %) Method (Future Volume Alternative)

Intersection #45 Orange Ave/17th St

Cycle (sec):	100	Critical Vol./Cap.(X):	0.686
Loss Time (sec):	0 (Y+R=4.0 sec)	Average Delay (sec/veh):	xxxxxx
Optimal Cycle:	73	Level Of Service:	B

Street Name:	Orange Avenue						17th Street					
Approach:	North Bound			South Bound			East Bound			West Bound		
Movement:	L - T - R			L - T - R			L - T - R			L - T - R		
Control:	Prot+Permit			Prot+Permit			Prot+Permit			Prot+Permit		
Rights:	Include			Include			Include			Include		
Min. Green:	0	0	0	0	0	0	0	0	0	0	0	0
Lanes:	1 0 1	1 0		1 0 1	0 1		1 0 2	0 1		1 0 2	0 1	
Volume Module:												
Base Vol:	168	276	68	214	204	121	140	910	157	83	895	198
Growth Adj:	1.07	1.07	1.07	1.07	1.07	1.07	1.07	1.07	1.07	1.07	1.07	1.07
Initial Bse:	180	296	73	229	219	130	150	976	168	89	959	212
Added Vol:	0	0	0	0	0	0	0	65	0	0	97	0
Committed P:	0	0	2	2	0	0	0	5	0	1	4	1
Initial Fut:	180	296	75	231	219	130	150	1046	168	90	1060	213
User Adj:	1.00	1.00	1.00	1.00	1.00	1.00	1.00	1.00	1.00	1.00	1.00	1.00
PHF Adj:	1.00	1.00	1.00	1.00	1.00	1.00	1.00	1.00	1.00	1.00	1.00	1.00
PHF Volume:	180	296	75	231	219	130	150	1046	168	90	1060	213
Reduct Vol:	0	0	0	0	0	0	0	0	0	0	0	0
Reduced Vol:	180	296	75	231	219	130	150	1046	168	90	1060	213
PCE Adj:	1.00	1.00	1.00	1.00	1.00	1.00	1.00	1.00	1.00	1.00	1.00	1.00
MLF Adj:	1.00	1.00	1.00	1.00	1.00	1.00	1.00	1.00	1.00	1.00	1.00	1.00
FinalVolume:	180	296	75	231	219	130	150	1046	168	90	1060	213
Saturation Flow Module:												
Sat/Lane:	1600	1600	1600	1600	1600	1600	1600	1600	1600	1600	1600	1600
Adjustment:	1.00	1.00	1.00	1.00	1.00	1.00	1.00	1.00	1.00	1.00	1.00	1.00
Lanes:	1.00	1.60	0.40	1.00	1.00	1.00	1.00	2.00	1.00	1.00	2.00	1.00
Final Sat.:	1600	2554	646	1600	1600	1600	1600	3200	1600	1600	3200	1600
Capacity Analysis Module:												
Vol/Sat:	0.11	0.12	0.12	0.14	0.14	0.08	0.09	0.33	0.11	0.06	0.33	0.13
Crit Moves:		****		****			****				****	

Newport Banning Ranch
Year 2016 with Project Bluff Road Alternative - TPO Analysis
PM Peak Hour

Level Of Service Computation Report
ICU 1(Loss as Cycle Length %) Method (Future Volume Alternative)

Intersection #46 Santa Ana Ave/17th St

Cycle (sec):	100	Critical Vol./Cap.(X):	0.674
Loss Time (sec):	0 (Y+R=4.0 sec)	Average Delay (sec/veh):	xxxxxx
Optimal Cycle:	57	Level Of Service:	B

Street Name:	Santa Ana Avenue						17th Street					
Approach:	North Bound			South Bound			East Bound			West Bound		
Movement:	L - T - R			L - T - R			L - T - R			L - T - R		
Control:	Permitted			Permitted			Prot+Permit			Prot+Permit		
Rights:	Include			Include			Include			Include		
Min. Green:	0	0	0	0	0	0	0	0	0	0	0	0
Lanes:	1 0 1	0 1		1 0 1	0 1		1 0 2	0 1		1 0 2	0 1	
Volume Module:												
Base Vol:	126	173	94	115	170	88	96	937	69	147	1137	130
Growth Adj:	1.07	1.07	1.07	1.07	1.07	1.07	1.07	1.07	1.07	1.07	1.07	1.07
Initial Bse:	135	185	101	123	182	94	103	1004	74	158	1219	139
Added Vol:	0	0	0	0	0	0	0	65	0	0	97	0
Committed P:	0	0	5	5	0	0	0	12	0	3	9	3
Initial Fut:	135	185	106	128	182	94	103	1081	74	161	1325	142
User Adj:	1.00	1.00	1.00	1.00	1.00	1.00	1.00	1.00	1.00	1.00	1.00	1.00
PHF Adj:	1.00	1.00	1.00	1.00	1.00	1.00	1.00	1.00	1.00	1.00	1.00	1.00
PHF Volume:	135	185	106	128	182	94	103	1081	74	161	1325	142
Reduct Vol:	0	0	0	0	0	0	0	0	0	0	0	0
Reduced Vol:	135	185	106	128	182	94	103	1081	74	161	1325	142
PCE Adj:	1.00	1.00	1.00	1.00	1.00	1.00	1.00	1.00	1.00	1.00	1.00	1.00
MLF Adj:	1.00	1.00	1.00	1.00	1.00	1.00	1.00	1.00	1.00	1.00	1.00	1.00
FinalVolume:	135	185	106	128	182	94	103	1081	74	161	1325	142
Saturation Flow Module:												
Sat/Lane:	1600	1600	1600	1600	1600	1600	1600	1600	1600	1600	1600	1600
Adjustment:	1.00	1.00	1.00	1.00	1.00	1.00	1.00	1.00	1.00	1.00	1.00	1.00
Lanes:	1.00	1.00	1.00	1.00	1.00	1.00	1.00	2.00	1.00	1.00	2.00	1.00
Final Sat.:	1600	1600	1600	1600	1600	1600	1600	3200	1600	1600	3200	1600
Capacity Analysis Module:												
Vol/Sat:	0.08	0.12	0.07	0.08	0.11	0.06	0.06	0.34	0.05	0.10	0.41	0.09
Crit Moves:		****		****			****				****	

Newport Banning Ranch
Year 2016 with Project Bluff Road Alternative - TPO Analysis
PM Peak Hour

Level Of Service Computation Report
ICU 1(Loss as Cycle Length %) Method (Future Volume Alternative)

Intersection #47 Tustin Ave/17th St

Cycle (sec):	100	Critical Vol./Cap.(X):	0.730
Loss Time (sec):	0 (Y+R=4.0 sec)	Average Delay (sec/veh):	xxxxxx
Optimal Cycle:	69	Level Of Service:	C

Street Name:	Tustin Avenue						17th Street					
Approach:	North Bound			South Bound			East Bound			West Bound		
Movement:	L - T - R			L - T - R			L - T - R			L - T - R		
Control:	Permitted			Permitted			Prot+Permit			Prot+Permit		
Rights:	Include			Include			Include			Include		
Min. Green:	0	0	0	0	0	0	0	0	0	0	0	0
Lanes:	1 0 0	1 0		1 0 1	0 1		1 0 1	1 0		1 0 1	1 0	
Volume Module:												
Base Vol:	124	157	83	77	111	56	46	996	62	76	1243	82
Growth Adj:	1.07	1.07	1.07	1.07	1.07	1.07	1.07	1.07	1.07	1.07	1.07	1.07
Initial Bse:	133	168	89	83	119	60	49	1068	66	81	1332	88
Added Vol:	0	0	0	0	0	0	0	65	0	0	97	0
Committed P:	0	0	5	5	0	0	0	30	0	3	17	3
Initial Fut:	133	168	94	88	119	60	49	1163	66	84	1446	91
User Adj:	1.00	1.00	1.00	1.00	1.00	1.00	1.00	1.00	1.00	1.00	1.00	1.00
PHF Adj:	1.00	1.00	1.00	1.00	1.00	1.00	1.00	1.00	1.00	1.00	1.00	1.00
PHF Volume:	133	168	94	88	119	60	49	1163	66	84	1446	91
Reduct Vol:	0	0	0	0	0	0	0	0	0	0	0	0
Reduced Vol:	133	168	94	88	119	60	49	1163	66	84	1446	91
PCE Adj:	1.00	1.00	1.00	1.00	1.00	1.00	1.00	1.00	1.00	1.00	1.00	1.00
MLF Adj:	1.00	1.00	1.00	1.00	1.00	1.00	1.00	1.00	1.00	1.00	1.00	1.00
FinalVolume:	133	168	94	88	119	60	49	1163	66	84	1446	91
Saturation Flow Module:												
Sat/Lane:	1600	1600	1600	1600	1600	1600	1600	1600	1600	1600	1600	1600
Adjustment:	1.00	1.00	1.00	1.00	1.00	1.00	1.00	1.00	1.00	1.00	1.00	1.00
Lanes:	1.00	0.64	0.36	1.00	1.00	1.00	1.00	1.89	0.11	1.00	1.88	0.12
Final Sat.:	1600	1027	573	1600	1600	1600	1600	3027	173	1600	3011	189
Capacity Analysis Module:												
Vol/Sat:	0.08	0.16	0.16	0.05	0.07	0.04	0.03	0.38	0.38	0.05	0.48	0.48
Crit Moves:		****		****			****				****	

Newport Banning Ranch
Year 2016 with Project Bluff Road Alternative - TPO Analysis
PM Peak Hour

Level Of Service Computation Report
ICU 1(Loss as Cycle Length %) Method (Future Volume Alternative)

Intersection #48 Irvine Ave/17th St

Cycle (sec):	100	Critical Vol./Cap.(X):	0.706
Loss Time (sec):	0 (Y+R=4.0 sec)	Average Delay (sec/veh):	xxxxxx
Optimal Cycle:	77	Level Of Service:	C

Street Name:	Irvine Avenue						17th Street					
Approach:	North Bound			South Bound			East Bound			West Bound		
Movement:	L - T - R			L - T - R			L - T - R			L - T - R		
Control:	Protected			Protected			Protected			Protected		
Rights:	Include			Include			Include			Include		
Min. Green:	0	0	0	0	0	0	0	0	0	0	0	0
Lanes:	2 0 2	0 1		2 0 2	0 1		2 0 1	1 0		1 0 1	1 0	
Volume Module:												
Base Vol:	373	623	49	168	528	334	233	570	200	101	646	61
Growth Adj:	1.07	1.07	1.07	1.07	1.07	1.07	1.07	1.07	1.07	1.07	1.07	1.07
Initial Bse:	400	668	53	180	566	358	250	611	214	108	693	65
Added Vol:	0	0	0	0	0	0	0	65	0	0	97	0
Committed P:	0	0	0	8	0	0	14	35	0	0	23	0
Initial Fut:	400	668	53	188	566	358	264	711	214	108	813	65
User Adj:	1.00	1.00	1.00	1.00	1.00	1.00	1.00	1.00	1.00	1.00	1.00	1.00
PHF Adj:	1.00	1.00	1.00	1.00	1.00	1.00	1.00	1.00	1.00	1.00	1.00	1.00
PHF Volume:	400	668	53	188	566	358	264	711	214	108	813	65
Reduct Vol:	0	0	0	0	0	0	0	0	0	0	0	0
Reduced Vol:	400	668	53	188	566	358	264	711	214	108	813	65
PCE Adj:	1.00	1.00	1.00	1.00	1.00	1.00	1.00	1.00	1.00	1.00	1.00	1.00
MLF Adj:	1.00	1.00	1.00	1.00	1.00	1.00	1.00	1.00	1.00	1.00	1.00	1.00
FinalVolume:	400	668	53	188	566	358	264	711	214	108	813	65
Saturation Flow Module:												
Sat/Lane:	1600	1600	1600	1600	1600	1600	1600	1600	1600	1600	1600	1600
Adjustment:	1.00	1.00	1.00	1.00	1.00	1.00	1.00	1.00	1.00	1.00	1.00	1.00
Lanes:	2.00	2.00	1.00	2.00	2.00	1.00	2.00	1.54	0.46	1.00	1.85	0.15
Final Sat.:	3200	3200	1600	3200	3200	1600	3200	2459	741	1600	2962	238
Capacity Analysis Module:												
Vol/Sat:	0.12	0.21	0.03	0.06	0.18	0.22	0.08	0.29	0.29	0.07	0.27	0.27
Crit Moves:	****					****		****		****		

Newport Banning Ranch
Year 2016 with Project Bluff Road Alternative - TPO Analysis
PM Peak Hour

Level Of Service Computation Report
ICU 1(Loss as Cycle Length %) Method (Future Volume Alternative)

Intersection #49 Placentia Ave/16th St

Cycle (sec):	100	Critical Vol./Cap.(X):	0.433
Loss Time (sec):	0 (Y+R=4.0 sec)	Average Delay (sec/veh):	xxxxxx
Optimal Cycle:	25	Level Of Service:	A

Street Name:	Placentia Avenue						16th Street					
Approach:	North Bound			South Bound			East Bound			West Bound		
Movement:	L - T - R			L - T - R			L - T - R			L - T - R		
Control:	Permitted			Permitted			Permitted			Permitted		
Rights:	Include			Include			Include			Include		
Min. Green:	0	0	0	0	0	0	0	0	0	0	0	0
Lanes:	1 0 1	1 0		1 0 1	1 0		1 0 0	1 0		1 0 0	1 0	
Volume Module:												
Base Vol:	34	530	22	21	381	20	64	42	59	21	28	82
Growth Adj:	1.07	1.07	1.07	1.07	1.07	1.07	1.07	1.07	1.07	1.07	1.07	1.07
Initial Bse:	36	568	24	23	408	21	69	45	63	23	30	88
Added Vol:	-8	-43	0	0	-122	18	8	101	-21	0	188	0
Committed P:	0	28	0	0	9	0	0	0	0	0	0	0
Initial Fut:	28	553	24	23	295	39	77	146	42	23	218	88
User Adj:	1.00	1.00	1.00	1.00	1.00	1.00	1.00	1.00	1.00	1.00	1.00	1.00
PHF Adj:	1.00	1.00	1.00	1.00	1.00	1.00	1.00	1.00	1.00	1.00	1.00	1.00
PHF Volume:	28	553	24	23	295	39	77	146	42	23	218	88
Reduct Vol:	0	0	0	0	0	0	0	0	0	0	0	0
Reduced Vol:	28	553	24	23	295	39	77	146	42	23	218	88
PCE Adj:	1.00	1.00	1.00	1.00	1.00	1.00	1.00	1.00	1.00	1.00	1.00	1.00
MLF Adj:	1.00	1.00	1.00	1.00	1.00	1.00	1.00	1.00	1.00	1.00	1.00	1.00
FinalVolume:	28	553	24	23	295	39	77	146	42	23	218	88
Saturation Flow Module:												
Sat/Lane:	1600	1600	1600	1600	1600	1600	1600	1600	1600	1600	1600	1600
Adjustment:	1.00	1.00	1.00	1.00	1.00	1.00	1.00	1.00	1.00	1.00	1.00	1.00
Lanes:	1.00	1.92	0.08	1.00	1.76	0.24	1.00	0.78	0.22	1.00	0.71	0.29
Final Sat.:	1600	3069	131	1600	2823	377	1600	1241	359	1600	1140	460
Capacity Analysis Module:												
Vol/Sat:	0.02	0.18	0.18	0.01	0.10	0.10	0.05	0.12	0.12	0.01	0.19	0.19
Crit Moves:		****		****			****				****	

Newport Banning Ranch
Year 2016 with Project Bluff Road Alternative - TPO Analysis
PM Peak Hour

Level Of Service Computation Report
ICU 1(Loss as Cycle Length %) Method (Future Volume Alternative)

Intersection #50 Superior Ave/16th St

Cycle (sec):	100	Critical Vol./Cap.(X):	0.591
Loss Time (sec):	0 (Y+R=4.0 sec)	Average Delay (sec/veh):	xxxxxx
Optimal Cycle:	35	Level Of Service:	A

Street Name:	Superior Avenue						16th Street					
Approach:	North Bound			South Bound			East Bound			West Bound		
Movement:	L - T - R			L - T - R			L - T - R			L - T - R		
Control:	Permitted			Permitted			Permitted			Permitted		
Rights:	Include			Include			Include			Include		
Min. Green:	0	0	0	0	0	0	0	0	0	0	0	0
Lanes:	1 0 2	0	1	1 0 1	1	0	1 0 0	1	0	0 1 0	0	1
Volume Module:												
Base Vol:	23	699	23	25	864	43	30	94	0	16	87	14
Growth Adj:	1.07	1.07	1.07	1.07	1.07	1.07	1.07	1.07	1.07	1.07	1.07	1.07
Initial Bse:	25	749	25	27	926	46	32	101	0	17	93	15
Added Vol:	0	68	0	0	85	93	48	53	0	0	95	0
Committed P:	2	34	0	0	118	0	0	0	3	0	0	0
Initial Fut:	27	851	25	27	1129	139	80	154	3	17	188	15
User Adj:	1.00	1.00	1.00	1.00	1.00	1.00	1.00	1.00	1.00	1.00	1.00	1.00
PHF Adj:	1.00	1.00	1.00	1.00	1.00	1.00	1.00	1.00	1.00	1.00	1.00	1.00
PHF Volume:	27	851	25	27	1129	139	80	154	3	17	188	15
Reduct Vol:	0	0	0	0	0	0	0	0	0	0	0	0
Reduced Vol:	27	851	25	27	1129	139	80	154	3	17	188	15
PCE Adj:	1.00	1.00	1.00	1.00	1.00	1.00	1.00	1.00	1.00	1.00	1.00	1.00
MLF Adj:	1.00	1.00	1.00	1.00	1.00	1.00	1.00	1.00	1.00	1.00	1.00	1.00
FinalVolume:	27	851	25	27	1129	139	80	154	3	17	188	15
Saturation Flow Module:												
Sat/Lane:	1600	1600	1600	1600	1600	1600	1600	1600	1600	1600	1600	1600
Adjustment:	1.00	1.00	1.00	1.00	1.00	1.00	1.00	1.00	1.00	1.00	1.00	1.00
Lanes:	1.00	2.00	1.00	1.00	1.78	0.22	1.00	0.98	0.02	0.08	0.92	1.00
Final Sat.:	1600	3200	1600	1600	2849	351	1600	1569	31	134	1466	1600
Capacity Analysis Module:												
Vol/Sat:	0.02	0.27	0.02	0.02	0.40	0.40	0.05	0.10	0.10	0.01	0.13	0.01
Crit Moves:	****				****		****				****	

Newport Banning Ranch
Year 2016 with Project Bluff Road Alternative - TPO Analysis
PM Peak Hour

Level Of Service Computation Report
ICU 1(Loss as Cycle Length %) Method (Future Volume Alternative)

Intersection #51 Newport Blvd/16th St

Cycle (sec):	120	Critical Vol./Cap.(X):	0.617
Loss Time (sec):	0 (Y+R=4.0 sec)	Average Delay (sec/veh):	xxxxxx
Optimal Cycle:	49	Level Of Service:	B

Street Name:	Newport Boulevard						16th Street					
Approach:	North Bound			South Bound			East Bound			West Bound		
Movement:	L - T - R			L - T - R			L - T - R			L - T - R		
Control:	Protected			Protected			Permitted			Permitted		
Rights:	Include			Include			Include			Include		
Min. Green:	0	0	0	0	0	0	0	0	0	0	0	0
Lanes:	1 0 2	1 0		1 0 3	0 1		0 0 1!	0 0		0 0 1!	0 0	
Volume Module:												
Base Vol:	20	1402	50	85	2084	29	36	48	21	20	37	59
Growth Adj:	1.07	1.07	1.07	1.07	1.07	1.07	1.07	1.07	1.07	1.07	1.07	1.07
Initial Bse:	21	1503	54	91	2234	31	39	51	23	21	40	63
Added Vol:	0	48	0	0	86	0	0	0	0	0	0	0
Committed P:	3	67	12	0	51	0	0	0	5	9	0	0
Initial Fut:	24	1618	66	91	2371	31	39	51	28	30	40	63
User Adj:	1.00	1.00	1.00	1.00	1.00	1.00	1.00	1.00	1.00	1.00	1.00	1.00
PHF Adj:	1.00	1.00	1.00	1.00	1.00	1.00	1.00	1.00	1.00	1.00	1.00	1.00
PHF Volume:	24	1618	66	91	2371	31	39	51	28	30	40	63
Reduct Vol:	0	0	0	0	0	0	0	0	0	0	0	0
Reduced Vol:	24	1618	66	91	2371	31	39	51	28	30	40	63
PCE Adj:	1.00	1.00	1.00	1.00	1.00	1.00	1.00	1.00	1.00	1.00	1.00	1.00
MLF Adj:	1.00	1.00	1.00	1.00	1.00	1.00	1.00	1.00	1.00	1.00	1.00	1.00
FinalVolume:	24	1618	66	91	2371	31	39	51	28	30	40	63
Saturation Flow Module:												
Sat/Lane:	1600	1600	1600	1600	1600	1600	1600	1600	1600	1600	1600	1600
Adjustment:	1.00	1.00	1.00	1.00	1.00	1.00	1.00	1.00	1.00	1.00	1.00	1.00
Lanes:	1.00	2.88	0.12	1.00	3.00	1.00	0.33	0.44	0.23	0.23	0.30	0.47
Final Sat.:	1600	4613	187	1600	4800	1600	525	700	374	365	476	759
Capacity Analysis Module:												
Vol/Sat:	0.02	0.35	0.35	0.06	0.49	0.02	0.02	0.07	0.07	0.02	0.08	0.08
Crit Moves:	****				****		****				****	

Newport Banning Ranch
Year 2016 with Project Bluff Road Alternative - TPO Analysis
PM Peak Hour

Level Of Service Computation Report
ICU 1(Loss as Cycle Length %) Method (Future Volume Alternative)

Intersection #52 Bluff Rd/Victoria St

Cycle (sec):	100	Critical Vol./Cap.(X):	0.573
Loss Time (sec):	0 (Y+R=4.0 sec)	Average Delay (sec/veh):	xxxxxx
Optimal Cycle:	53	Level Of Service:	A

Street Name:	Bluff Road						Victoria St					
Approach:	North Bound			South Bound			East Bound			West Bound		
Movement:	L - T - R			L - T - R			L - T - R			L - T - R		
Control:	Protected			Protected			Protected			Protected		
Rights:	Include			Include			Include			Include		
Min. Green:	0	0	0	0	0	0	0	0	0	0	0	0
Lanes:	0 0 0 0 0			0 0 0 0 0			0 0 2 0 0			0 0 2 0 0		
Volume Module:												
Base Vol:	0	0	0	0	0	0	0	942	0	0	1709	0
Growth Adj:	1.00	1.00	1.00	1.00	1.00	1.00	1.00	1.07	1.00	1.00	1.07	1.00
Initial Bse:	0	0	0	0	0	0	0	1010	0	0	1832	0
Added Vol:	0	0	0	0	0	0	0	1	0	0	0	0
PasserByVol:	0	0	0	0	0	0	0	0	0	0	0	0
Initial Fut:	0	0	0	0	0	0	0	1011	0	0	1832	0
User Adj:	1.00	1.00	1.00	1.00	1.00	1.00	1.00	1.00	1.00	1.00	1.00	1.00
PHF Adj:	1.00	1.00	1.00	1.00	1.00	1.00	1.00	1.00	1.00	1.00	1.00	1.00
PHF Volume:	0	0	0	0	0	0	0	1011	0	0	1832	0
Reduct Vol:	0	0	0	0	0	0	0	0	0	0	0	0
Reduced Vol:	0	0	0	0	0	0	0	1011	0	0	1832	0
PCE Adj:	1.00	1.00	1.00	1.00	1.00	1.00	1.00	1.00	1.00	1.00	1.00	1.00
MLF Adj:	1.00	1.00	1.00	1.00	1.00	1.00	1.00	1.00	1.00	1.00	1.00	1.00
FinalVolume:	0	0	0	0	0	0	0	1011	0	0	1832	0
Saturation Flow Module:												
Sat/Lane:	1600	1600	1600	1600	1600	1600	1600	1600	1600	1600	1600	1600
Adjustment:	1.00	1.00	1.00	1.00	1.00	1.00	1.00	1.00	1.00	1.00	1.00	1.00
Lanes:	0.00	0.00	0.00	0.00	0.00	0.00	0.00	2.00	0.00	0.00	2.00	0.00
Final Sat.:	0	0	0	0	0	0	0	3200	0	0	3200	0
Capacity Analysis Module:												
Vol/Sat:	0.00	0.00	0.00	0.00	0.00	0.00	0.00	0.32	0.00	0.00	0.57	0.00
Crit Moves:							****				****	

Newport Banning Ranch
Year 2016 with Project Bluff Road Alternative - TPO Analysis
PM Peak Hour

Level Of Service Computation Report
ICU 1(Loss as Cycle Length %) Method (Future Volume Alternative)

Intersection #53 Bluff Rd/19th St

Cycle (sec):	100	Critical Vol./Cap.(X):	0.000
Loss Time (sec):	0 (Y+R=4.0 sec)	Average Delay (sec/veh):	xxxxxx
Optimal Cycle:	0	Level Of Service:	

Street Name:	Bluff Rd						19th Street					
Approach:	North Bound			South Bound			East Bound			West Bound		
Movement:	L - T - R			L - T - R			L - T - R			L - T - R		
Control:	Permitted			Permitted			Permitted			Permitted		
Rights:	Include			Include			Include			Include		
Min. Green:	0	0	0	0	0	0	0	0	0	0	0	0
Lanes:	0 0 0 0 0			0 0 0 0 0			0 0 0 0 0			0 0 0 0 0		
Volume Module:												
Base Vol:	0	0	0	0	0	0	0	0	0	0	0	0
Growth Adj:	0.00	0.00	0.00	0.00	0.00	0.00	0.00	0.00	0.00	0.00	0.00	0.00
Initial Bse:	0	0	0	0	0	0	0	0	0	0	0	0
Added Vol:	0	0	0	0	0	0	0	0	0	0	0	0
PasserByVol:	0	0	0	0	0	0	0	0	0	0	0	0
Initial Fut:	0	0	0	0	0	0	0	0	0	0	0	0
User Adj:	0.00	0.00	0.00	0.00	0.00	0.00	0.00	0.00	0.00	0.00	0.00	0.00
PHF Adj:	0.00	0.00	0.00	0.00	0.00	0.00	0.00	0.00	0.00	0.00	0.00	0.00
PHF Volume:	0	0	0	0	0	0	0	0	0	0	0	0
Reduct Vol:	0	0	0	0	0	0	0	0	0	0	0	0
Reduced Vol:	0	0	0	0	0	0	0	0	0	0	0	0
PCE Adj:	0.00	0.00	0.00	0.00	0.00	0.00	0.00	0.00	0.00	0.00	0.00	0.00
MLF Adj:	0.00	0.00	0.00	0.00	0.00	0.00	0.00	0.00	0.00	0.00	0.00	0.00
FinalVolume:	0	0	0	0	0	0	0	0	0	0	0	0
Saturation Flow Module:												
Sat/Lane:	0	0	0	0	0	0	0	0	0	0	0	0
Adjustment:	1.00	1.00	1.00	1.00	1.00	1.00	1.00	1.00	1.00	1.00	1.00	1.00
Lanes:	0.00	0.00	0.00	0.00	0.00	0.00	0.00	0.00	0.00	0.00	0.00	0.00
Final Sat.:	0	0	0	0	0	0	0	0	0	0	0	0
Capacity Analysis Module:												
Vol/Sat:	0.00	0.00	0.00	0.00	0.00	0.00	0.00	0.00	0.00	0.00	0.00	0.00
Crit Moves:												

Newport Banning Ranch
Year 2016 with Project Bluff Road Alternative - TPO Analysis
PM Peak Hour

Level Of Service Computation Report
ICU 1(Loss as Cycle Length %) Method (Future Volume Alternative)

Intersection #54 Bluff Rd/17th St

Cycle (sec):	100	Critical Vol./Cap.(X):	0.165
Loss Time (sec):	0 (Y+R=4.0 sec)	Average Delay (sec/veh):	xxxxxx
Optimal Cycle:	17	Level Of Service:	A

Street Name:	Bluff Road						17th Street					
Approach:	North Bound			South Bound			East Bound			West Bound		
Movement:	L - T - R			L - T - R			L - T - R			L - T - R		
Control:	Permitted			Permitted			Permitted			Permitted		
Rights:	Include			Include			Include			Include		
Min. Green:	0	0	0	0	0	0	0	0	0	0	0	0
Lanes:	1 0 1	1 0		1 0 0	1 0		0 0 1!	0 0		1 0 1	0 1	
Volume Module:												
Base Vol:	0	0	0	0	0	0	0	0	0	0	0	0
Growth Adj:	1.00	1.00	1.00	1.00	1.00	1.00	1.00	1.00	1.00	1.00	1.00	1.00
Initial Bse:	0	0	0	0	0	0	0	0	0	0	0	0
Added Vol:	0	55	80	0	41	0	0	11	0	156	19	0
Internal Ca:	5	3	3	0	6	7	5	3	3	3	2	0
Initial Fut:	5	58	83	0	47	7	5	14	3	159	21	0
User Adj:	1.00	1.00	1.00	1.00	1.00	1.00	1.00	1.00	1.00	1.00	1.00	1.00
PHF Adj:	1.00	1.00	1.00	1.00	1.00	1.00	1.00	1.00	1.00	1.00	1.00	1.00
PHF Volume:	5	58	83	0	47	7	5	14	3	159	21	0
Reduct Vol:	0	0	0	0	0	0	0	0	0	0	0	0
Reduced Vol:	5	58	83	0	47	7	5	14	3	159	21	0
PCE Adj:	1.00	1.00	1.00	1.00	1.00	1.00	1.00	1.00	1.00	1.00	1.00	1.00
MLF Adj:	1.00	1.00	1.00	1.00	1.00	1.00	1.00	1.00	1.00	1.00	1.00	1.00
FinalVolume:	5	58	83	0	47	7	5	14	3	159	21	0
Saturation Flow Module:												
Sat/Lane:	1600	1600	1600	1600	1600	1600	1600	1600	1600	1600	1600	1600
Adjustment:	1.00	1.00	1.00	1.00	1.00	1.00	1.00	1.00	1.00	1.00	1.00	1.00
Lanes:	1.00	1.00	1.00	1.00	0.87	0.13	0.23	0.63	0.14	1.00	1.00	1.00
Final Sat.:	1600	1600	1600	1600	1393	207	364	1018	218	1600	1600	1600
Capacity Analysis Module:												
Vol/Sat:	0.00	0.04	0.05	0.00	0.03	0.03	0.00	0.01	0.01	0.10	0.01	0.00
Crit Moves:			****	****				****		****		

Newport Banning Ranch
Year 2016 with Project Bluff Road Alternative - TPO Analysis
PM Peak Hour

Level Of Service Computation Report
2000 HCM Unsignalized Method (Future Volume Alternative)

Intersection #55 Bluff Rd/16th St

Average Delay (sec/veh): 6.3 Worst Case Level Of Service: C[19.6]

Street Name:	Bluff Road						16th Street					
Approach:	North Bound			South Bound			East Bound			West Bound		
Movement:	L - T - R			L - T - R			L - T - R			L - T - R		
Control:	Uncontrolled			Uncontrolled			Stop Sign			Stop Sign		
Rights:	Include			Include			Include			Include		
Lanes:	1 0 1	1 0		1 0 1	1 0		0 0 1!	0 0		0 0 1!	0 0	
Volume Module:												
Base Vol:	0	0	0	0	0	0	0	0	0	0	0	0
Growth Adj:	1.00	1.00	1.00	1.00	1.00	1.00	1.00	1.00	1.00	1.00	1.00	1.00
Initial Bse:	0	0	0	0	0	0	0	0	0	0	0	0
Added Vol:	25	267	27	79	287	0	0	19	14	69	35	144
Internal Ca:	0	9	0	0	12	4	2	0	0	0	0	0
Initial Fut:	25	276	27	79	299	4	2	19	14	69	35	144
User Adj:	1.00	1.00	1.00	1.00	1.00	1.00	1.00	1.00	1.00	1.00	1.00	1.00
PHF Adj:	1.00	1.00	1.00	1.00	1.00	1.00	1.00	1.00	1.00	1.00	1.00	1.00
PHF Volume:	25	276	27	79	299	4	2	19	14	69	35	144
Reduct Vol:	0	0	0	0	0	0	0	0	0	0	0	0
FinalVolume:	25	276	27	79	299	4	2	19	14	69	35	144
Critical Gap Module:												
Critical Gp:	4.1	xxxx	xxxxx	4.1	xxxx	xxxxx	7.5	6.5	6.9	7.5	6.5	6.9
FollowUpTim:	2.2	xxxx	xxxxx	2.2	xxxx	xxxxx	3.5	4.0	3.3	3.5	4.0	3.3
Capacity Module:												
Cnflict Vol:	303	xxxx	xxxxx	303	xxxx	xxxxx	665	812	152	657	801	152
Potent Cap.:	1269	xxxx	xxxxx	1269	xxxx	xxxxx	350	315	874	354	320	874
Move Cap.:	1269	xxxx	xxxxx	1269	xxxx	xxxxx	249	290	874	311	294	874
Volume/Cap:	0.02	xxxx	xxxx	0.06	xxxx	xxxx	0.01	0.07	0.02	0.22	0.12	0.16
Level Of Service Module:												
2Way95thQ:	0.1	xxxx	xxxxx	0.2	xxxx	xxxxx	xxxx	xxxx	xxxxx	xxxx	xxxx	xxxxx
Control Del:	7.9	xxxx	xxxxx	8.0	xxxx	xxxxx	xxxxx	xxxx	xxxxx	xxxxx	xxxx	xxxxx
LOS by Move:	A	*	*	A	*	*	*	*	*	*	*	*
Movement:	LT - LTR - RT			LT - LTR - RT			LT - LTR - RT			LT - LTR - RT		
Shared Cap.:	xxxx	xxxx	xxxxx	xxxx	xxxx	xxxxx	xxxx	391	xxxxx	xxxx	491	xxxxx
SharedQueue:	xxxxx	xxxx	xxxxx	xxxxx	xxxx	xxxxx	xxxxx	0.3	xxxxx	xxxxx	2.8	xxxxx
Shrd ConDel:	xxxxx	xxxx	xxxxx	xxxxx	xxxx	xxxxx	xxxxx	15.1	xxxxx	xxxxx	19.6	xxxxx
Shared LOS:	*	*	*	*	*	*	*	C	*	*	C	*
ApproachDel:	xxxxxx			xxxxxx			15.1			19.6		
ApproachLOS:	*			*			C			C		

Note: Queue reported is the number of cars per lane.

Newport Banning Ranch
Year 2016 with Project Bluff Road Alternative - TPO Analysis
PM Peak Hour

Level Of Service Computation Report
ICU 1(Loss as Cycle Length %) Method (Future Volume Alternative)

Intersection #56 Bluff Rd/15th St

Cycle (sec):	100	Critical Vol./Cap.(X):	0.276
Loss Time (sec):	0 (Y+R=4.0 sec)	Average Delay (sec/veh):	xxxxxx
Optimal Cycle:	26	Level Of Service:	A

Street Name:	Bluff Road						15th Street					
Approach:	North Bound			South Bound			East Bound			West Bound		
Movement:	L - T - R			L - T - R			L - T - R			L - T - R		
Control:	Split Phase			Split Phase			Permitted			Permitted		
Rights:	Include			Include			Include			Include		
Min. Green:	0	0	0	0	0	0	0	0	0	0	0	0
Lanes:	0 0 0 0 0			1 0 0 0 2			2 0 2 0 0			0 0 2 1 0		
Volume Module:												
Base Vol:	0	0	0	0	0	0	0	0	0	0	0	0
Growth Adj:	1.00	1.00	1.00	1.00	1.00	1.00	1.00	1.00	1.00	1.00	1.00	1.00
Initial Bse:	0	0	0	0	0	0	0	0	0	0	0	0
Added Vol:	0	0	0	28	0	365	315	123	0	0	253	50
Internal Ca:	0	0	0	0	0	1	1	0	0	0	0	0
Initial Fut:	0	0	0	28	0	366	316	123	0	0	253	50
User Adj:	1.00	1.00	1.00	1.00	1.00	1.00	1.00	1.00	1.00	1.00	1.00	1.00
PHF Adj:	1.00	1.00	1.00	1.00	1.00	1.00	1.00	1.00	1.00	1.00	1.00	1.00
PHF Volume:	0	0	0	28	0	366	316	123	0	0	253	50
Reduct Vol:	0	0	0	0	0	0	0	0	0	0	0	0
Reduced Vol:	0	0	0	28	0	366	316	123	0	0	253	50
PCE Adj:	1.00	1.00	1.00	1.00	1.00	1.00	1.00	1.00	1.00	1.00	1.00	1.00
MLF Adj:	1.00	1.00	1.00	1.00	1.00	1.00	1.00	1.00	1.00	1.00	1.00	1.00
FinalVolume:	0	0	0	28	0	366	316	123	0	0	253	50
Saturation Flow Module:												
Sat/Lane:	1600	1600	1600	1600	1600	1600	1600	1600	1600	1600	1600	1600
Adjustment:	1.00	1.00	1.00	1.00	1.00	1.00	1.00	1.00	1.00	1.00	1.00	1.00
Lanes:	0.00	0.00	0.00	1.00	0.00	2.00	2.00	2.00	0.00	0.00	2.50	0.50
Final Sat.:	0	0	0	1600	0	3200	3200	3200	0	0	4008	792
Capacity Analysis Module:												
Vol/Sat:	0.00	0.00	0.00	0.02	0.00	0.11	0.10	0.04	0.00	0.00	0.06	0.06
Crit Moves:						****	****				****	

Newport Banning Ranch
Year 2016 with Project Bluff Road Alternative - TPO Analysis
PM Peak Hour

Level Of Service Computation Report
ICU 1(Loss as Cycle Length %) Method (Future Volume Alternative)

Intersection #57 Bluff Rd/W. Coast Hwy

Cycle (sec):	120	Critical Vol./Cap.(X):	0.805
Loss Time (sec):	0 (Y+R=4.0 sec)	Average Delay (sec/veh):	xxxxxx
Optimal Cycle:	117	Level Of Service:	D

Street Name:	Bluff Road						W. Coast Highway					
Approach:	North Bound			South Bound			East Bound			West Bound		
Movement:	L - T - R			L - T - R			L - T - R			L - T - R		
Control:	Split Phase			Split Phase			Protected			Protected		
Rights:	Include			Include			Include			Include		
Min. Green:	0	0	0	0	0	0	0	0	0	0	0	0
Lanes:	0 0 0 0 0			2 0 0 0 2			2 0 3 0 0			0 0 3 0 1		
Volume Module:												
Base Vol:	0	0	0	0	0	0	0	1487	0	0	2818	0
Growth Adj:	1.00	1.00	1.00	1.00	1.00	1.00	1.00	1.07	1.00	1.00	1.07	1.00
Initial Bse:	0	0	0	0	0	0	0	1594	0	0	3021	0
Added Vol:	0	0	0	104	0	461	320	-122	0	0	-329	158
PasserByVol:	0	0	0	0	0	0	0	0	0	0	0	0
Initial Fut:	0	0	0	104	0	461	320	1472	0	0	2692	158
User Adj:	1.00	1.00	1.00	1.00	1.00	1.00	1.00	1.00	1.00	1.00	1.00	1.00
PHF Adj:	1.00	1.00	1.00	1.00	1.00	1.00	1.00	1.00	1.00	1.00	1.00	1.00
PHF Volume:	0	0	0	104	0	461	320	1472	0	0	2692	158
Reduct Vol:	0	0	0	0	0	0	0	0	0	0	0	0
Reduced Vol:	0	0	0	104	0	461	320	1472	0	0	2692	158
PCE Adj:	1.00	1.00	1.00	1.00	1.00	1.00	1.00	1.00	1.00	1.00	1.00	1.00
MLF Adj:	1.00	1.00	1.00	1.00	1.00	1.00	1.00	1.00	1.00	1.00	1.00	1.00
FinalVolume:	0	0	0	104	0	461	320	1472	0	0	2692	158
Saturation Flow Module:												
Sat/Lane:	1600	1600	1600	1600	1600	1600	1600	1600	1600	1600	1600	1600
Adjustment:	1.00	1.00	1.00	1.00	1.00	1.00	1.00	1.00	1.00	1.00	1.00	1.00
Lanes:	0.00	0.00	0.00	2.00	0.00	2.00	2.00	3.00	0.00	0.00	3.00	1.00
Final Sat.:	0	0	0	3200	0	3200	3200	4800	0	0	4800	1600
Capacity Analysis Module:												
Vol/Sat:	0.00	0.00	0.00	0.03	0.00	0.14	0.10	0.31	0.00	0.00	0.56	0.10
Crit Moves:						****	****				****	

Newport Banning Ranch
Year 2016 with Project Bluff Road Alternative - TPO Analysis
PM Peak Hour

Level Of Service Computation Report
2000 HCM 4-Way Stop Method (Future Volume Alternative)

Intersection #58 Monrovia Ave/15th Street

Cycle (sec):	100	Critical Vol./Cap.(X):	0.373
Loss Time (sec):	0 (Y+R=4.0 sec)	Average Delay (sec/veh):	9.3
Optimal Cycle:	0	Level Of Service:	A

Street Name:	Monrovia Ave						15th Street					
Approach:	North Bound			South Bound			East Bound			West Bound		
Movement:	L - T - R			L - T - R			L - T - R			L - T - R		
Control:	Stop Sign			Stop Sign			Stop Sign			Stop Sign		
Rights:	Include			Include			Include			Include		
Min. Green:	0	0	0	0	0	0	0	0	0	0	0	0
Lanes:	0 0 0 1 0			0 0 1! 0 0			0 1 0 0 0			0 0 1! 0 0		
Volume Module: >> Count Date: 4 May 2011 << Existing PM Peak Hour												
Base Vol:	0	5	17	92	5	1	9	7	0	11	2	42
Growth Adj:	1.00	1.00	1.00	1.00	1.00	1.00	1.00	1.00	1.00	1.00	1.00	1.00
Initial Bse:	0	5	17	92	5	1	9	7	0	11	2	42
Added Vol:	0	0	0	-21	0	53	20	131	0	0	251	-8
PasserByVol:	0	0	0	0	0	0	0	0	0	0	0	0
Initial Fut:	0	5	17	71	5	54	29	138	0	11	253	34
User Adj:	1.00	1.00	1.00	1.00	1.00	1.00	1.00	1.00	1.00	1.00	1.00	1.00
PHF Adj:	1.00	1.00	1.00	1.00	1.00	1.00	1.00	1.00	1.00	1.00	1.00	1.00
PHF Volume:	0	5	17	71	5	54	29	138	0	11	253	34
Reduct Vol:	0	0	0	0	0	0	0	0	0	0	0	0
Reduced Vol:	0	5	17	71	5	54	29	138	0	11	253	34
PCE Adj:	1.00	1.00	1.00	1.00	1.00	1.00	1.00	1.00	1.00	1.00	1.00	1.00
MLF Adj:	1.00	1.00	1.00	1.00	1.00	1.00	1.00	1.00	1.00	1.00	1.00	1.00
FinalVolume:	0	5	17	71	5	54	29	138	0	11	253	34
Saturation Flow Module:												
Adjustment:	1.00	1.00	1.00	1.00	1.00	1.00	1.00	1.00	1.00	1.00	1.00	1.00
Lanes:	0.00	0.23	0.77	0.55	0.04	0.41	0.17	0.83	0.00	0.04	0.85	0.11
Final Sat.:	0	159	541	381	27	289	131	622	0	29	678	91
Capacity Analysis Module:												
Vol/Sat:	xxxx	0.03	0.03	0.19	0.19	0.19	0.22	0.22	xxxx	0.37	0.37	0.37
Crit Moves:		****		****				****			****	
Delay/Veh:	0.0	7.8	7.8	8.8	8.8	8.8	8.9	8.9	0.0	9.9	9.9	9.9
Delay Adj:	1.00	1.00	1.00	1.00	1.00	1.00	1.00	1.00	1.00	1.00	1.00	1.00
AdjDel/Veh:	0.0	7.8	7.8	8.8	8.8	8.8	8.9	8.9	0.0	9.9	9.9	9.9
LOS by Move:	*	A	A	A	A	A	A	A	*	A	A	A
ApproachDel:		7.8			8.8			8.9			9.9	
Delay Adj:		1.00			1.00			1.00			1.00	
ApprAdjDel:		7.8			8.8			8.9			9.9	
LOS by Appr:		A			A			A			A	
AllWayAvgQ:	0.0	0.0	0.0	0.2	0.2	0.2	0.3	0.3	0.3	0.6	0.6	0.6

Newport Banning Ranch
Year 2016 with Project Bluff Road Alternative - TPO Analysis
PM Peak Hour

Note: Queue reported is the number of cars per lane.

Newport Banning Ranch
Year 2016 with Project Bluff Road Alternative - TPO Analysis
PM Peak Hour

Level Of Service Computation Report
ICU 1(Loss as Cycle Length %) Method (Future Volume Alternative)

Intersection #100 Pomona Ave/16th St

Cycle (sec):	100	Critical Vol./Cap.(X):	0.048
Loss Time (sec):	0 (Y+R=4.0 sec)	Average Delay (sec/veh):	xxxxxx
Optimal Cycle:	15	Level Of Service:	A

Street Name:	Pomona Avenue						16th Street					
Approach:	North Bound			South Bound			East Bound			West Bound		
Movement:	L - T - R			L - T - R			L - T - R			L - T - R		
Control:	Permitted			Permitted			Permitted			Permitted		
Rights:	Include			Include			Include			Include		
Min. Green:	0	0	0	0	0	0	0	0	0	0	0	0
Lanes:	0 0 0 0 0			1 0 0 1 0			1 0 0 1 0			0 0 0 1 0		
Volume Module:												
Base Vol:	0	0	0	34	56	15	0	-200	0	0	-200	0
Growth Adj:	1.07	1.07	1.07	1.07	1.07	1.07	1.07	1.07	1.07	1.07	1.07	1.07
Initial Bse:	0	0	0	36	60	16	0	-214	0	0	-214	0
Added Vol:	0	0	0	0	0	0	0	101	0	0	188	0
PasserByVol:	0	0	0	0	0	0	0	0	0	0	0	0
Initial Fut:	0	0	0	36	60	16	0	-113	0	0	-26	0
User Adj:	1.00	1.00	1.00	1.00	1.00	1.00	1.00	0.00	1.00	1.00	0.00	1.00
PHF Adj:	1.00	1.00	1.00	1.00	1.00	1.00	1.00	0.00	1.00	1.00	0.00	1.00
PHF Volume:	0	0	0	36	60	16	0	0	0	0	0	0
Reduct Vol:	0	0	0	0	0	0	0	0	0	0	0	0
Reduced Vol:	0	0	0	36	60	16	0	0	0	0	0	0
PCE Adj:	1.00	1.00	1.00	1.00	1.00	1.00	1.00	0.00	1.00	1.00	0.00	1.00
MLF Adj:	1.00	1.00	1.00	1.00	1.00	1.00	1.00	0.00	1.00	1.00	0.00	1.00
FinalVolume:	0	0	0	36	60	16	0	0	0	0	0	0
Saturation Flow Module:												
Sat/Lane:	1600	1600	1600	1600	1600	1600	1600	1600	1600	1600	1600	1600
Adjustment:	1.00	1.00	1.00	1.00	1.00	1.00	1.00	1.00	1.00	1.00	1.00	1.00
Lanes:	0.00	0.00	0.00	1.00	0.79	0.21	1.00	1.00	0.00	0.00	1.00	0.00
Final Sat.:	0	0	0	1600	1262	338	1600	1600	0	0	1600	0
Capacity Analysis Module:												
Vol/Sat:	0.00	0.00	0.00	0.02	0.05	0.05	0.00	0.00	0.00	0.00	0.00	0.00
Crit Moves:					****							

APPENDIX G

INTERSECTION ANALYSIS WORKSHEETS – CUMULATIVE ANALYSIS

Newport Banning Ranch
Year 2016 Cumulative Conditions without Project
AM Peak Hour

Scenario Report

Scenario:	CEQA 2016 w/o Project AM ICU
Command:	CEQA 2016 w/o Project AM ICU
Volume:	Existing+Commited AM
Geometry:	2016 Planned ICU
Impact Fee:	Default Impact Fee
Trip Generation:	Cumulative AM
Trip Distribution:	Cumulative
Paths:	None
Routes:	Default Route
Configuration:	2016 ICU

Newport Banning Ranch
Year 2016 Cumulative Conditions without Project
AM Peak Hour

Level Of Service Computation Report
2000 HCM 4-Way Stop Method (Future Volume Alternative)

Intersection #1 Monrovia Ave/16th St

Cycle (sec):	100	Critical Vol./Cap.(X):	0.375
Loss Time (sec):	0 (Y+R=4.0 sec)	Average Delay (sec/veh):	9.6
Optimal Cycle:	0	Level Of Service:	A

Street Name:	Monrovia Avenue						16th Street					
Approach:	North Bound			South Bound			East Bound			West Bound		
Movement:	L -	T -	R	L -	T -	R	L -	T -	R	L -	T -	R
Control:	Stop Sign			Stop Sign			Stop Sign			Stop Sign		
Rights:	Include			Include			Include			Include		
Min. Green:	0	0	0	0	0	0	0	0	0	0	0	0
Lanes:	0 0	1! 0	0	0 0	1! 0	0	0 0	1! 0	0	0 0	1! 0	0
Volume Module:												
Base Vol:	4	92	54	35	104	19	9	20	10	112	44	44
Growth Adj:	1.00	1.00	1.00	1.00	1.00	1.00	1.00	1.00	1.00	1.00	1.00	1.00
Initial Bse:	4	92	54	35	104	19	9	20	10	112	44	44
Added Vol:	0	6	27	3	9	0	0	0	0	65	0	4
Committed P:	0	0	0	0	0	0	0	0	0	0	0	0
Initial Fut:	4	98	81	38	113	19	9	20	10	177	44	48
User Adj:	1.00	1.00	1.00	1.00	1.00	1.00	1.00	1.00	1.00	1.00	1.00	1.00
PHF Adj:	1.00	1.00	1.00	1.00	1.00	1.00	1.00	1.00	1.00	1.00	1.00	1.00
PHF Volume:	4	98	81	38	113	19	9	20	10	177	44	48
Reduct Vol:	0	0	0	0	0	0	0	0	0	0	0	0
Reduced Vol:	4	98	81	38	113	19	9	20	10	177	44	48
PCE Adj:	1.00	1.00	1.00	1.00	1.00	1.00	1.00	1.00	1.00	1.00	1.00	1.00
MLF Adj:	1.00	1.00	1.00	1.00	1.00	1.00	1.00	1.00	1.00	1.00	1.00	1.00
FinalVolume:	4	98	81	38	113	19	9	20	10	177	44	48
Saturation Flow Module:												
Adjustment:	1.00	1.00	1.00	1.00	1.00	1.00	1.00	1.00	1.00	1.00	1.00	1.00
Lanes:	0.02	0.54	0.44	0.22	0.67	0.11	0.23	0.51	0.26	0.66	0.16	0.18
Final Sat.:	16	396	327	157	467	79	154	341	171	472	117	128
Capacity Analysis Module:												
Vol/Sat:	0.25	0.25	0.25	0.24	0.24	0.24	0.06	0.06	0.06	0.38	0.38	0.38
Crit Moves:		****			****			****			****	
Delay/Veh:	9.0	9.0	9.0	9.3	9.3	9.3	8.2	8.2	8.2	10.4	10.4	10.4
Delay Adj:	1.00	1.00	1.00	1.00	1.00	1.00	1.00	1.00	1.00	1.00	1.00	1.00
AdjDel/Veh:	9.0	9.0	9.0	9.3	9.3	9.3	8.2	8.2	8.2	10.4	10.4	10.4
LOS by Move:	A	A	A	A	A	A	A	A	A	B	B	B
ApproachDel:		9.0			9.3			8.2			10.4	
Delay Adj:		1.00			1.00			1.00			1.00	
ApprAdjDel:		9.0			9.3			8.2			10.4	
LOS by Appr:		A			A			A			B	
AllWayAvgQ:	0.3	0.3	0.3	0.3	0.3	0.3	0.1	0.1	0.1	0.5	0.5	0.5

Newport Banning Ranch
Year 2016 Cumulative Conditions without Project
AM Peak Hour

Note: Queue reported is the number of cars per lane.

Newport Banning Ranch
Year 2016 Cumulative Conditions without Project
AM Peak Hour

Level Of Service Computation Report
ICU 1(Loss as Cycle Length %) Method (Future Volume Alternative)

Intersection #2 Placentia Ave/15th St

Cycle (sec):	100	Critical Vol./Cap.(X):	0.494
Loss Time (sec):	0 (Y+R=4.0 sec)	Average Delay (sec/veh):	xxxxxx
Optimal Cycle:	45	Level Of Service:	A

Street Name:	Placentia Ave						15th Street					
Approach:	North Bound			South Bound			East Bound			West Bound		
Movement:	L - T - R			L - T - R			L - T - R			L - T - R		
Control:	Prot+Permit			Prot+Permit			Split Phase			Split Phase		
Rights:	Include			Include			Include			Include		
Min. Green:	0	0	0	0	0	0	0	0	0	0	0	0
Lanes:	1 0 1	1 0		1 0 1	1 0		0 0 1!	0 0		0 1 0	0 1	
Volume Module:												
Base Vol:	131	425	15	25	431	19	57	51	174	4	22	75
Growth Adj:	1.00	1.00	1.00	1.00	1.00	1.00	1.00	1.00	1.00	1.00	1.00	1.00
Initial Bse:	131	425	15	25	431	19	57	51	174	4	22	75
Added Vol:	37	2	0	0	27	8	3	0	17	0	0	0
Committed P:	0	24	0	0	5	0	0	0	0	0	0	0
Initial Fut:	168	451	15	25	463	27	60	51	191	4	22	75
User Adj:	1.00	1.00	1.00	1.00	1.00	1.00	1.00	1.00	1.00	1.00	1.00	1.00
PHF Adj:	1.00	1.00	1.00	1.00	1.00	1.00	1.00	1.00	1.00	1.00	1.00	1.00
PHF Volume:	168	451	15	25	463	27	60	51	191	4	22	75
Reduct Vol:	0	0	0	0	0	0	0	0	0	0	0	0
Reduced Vol:	168	451	15	25	463	27	60	51	191	4	22	75
PCE Adj:	1.00	1.00	1.00	1.00	1.00	1.00	1.00	1.00	1.00	1.00	1.00	1.00
MLF Adj:	1.00	1.00	1.00	1.00	1.00	1.00	1.00	1.00	1.00	1.00	1.00	1.00
FinalVolume:	168	451	15	25	463	27	60	51	191	4	22	75
Saturation Flow Module:												
Sat/Lane:	1600	1600	1600	1600	1600	1600	1600	1600	1600	1600	1600	1600
Adjustment:	1.00	1.00	1.00	1.00	1.00	1.00	1.00	1.00	1.00	1.00	1.00	1.00
Lanes:	1.00	1.94	0.06	1.00	1.89	0.11	0.20	0.17	0.63	0.15	0.85	1.00
Final Sat.:	1600	3097	103	1600	3024	176	318	270	1012	246	1354	1600
Capacity Analysis Module:												
Vol/Sat:	0.11	0.15	0.15	0.02	0.15	0.15	0.19	0.19	0.19	0.02	0.02	0.05
Crit Moves:	****				****		****					****

Newport Banning Ranch
Year 2016 Cumulative Conditions without Project
AM Peak Hour

Level Of Service Computation Report
2000 HCM Unsignalized Method (Future Volume Alternative)

Intersection #3 Superior Ave/15th St

Average Delay (sec/veh): 1.7 Worst Case Level Of Service: C[21.0]

Street Name:	Superior Avenue						15th Street					
Approach:	North Bound			South Bound			East Bound			West Bound		
Movement:	L - T - R			L - T - R			L - T - R			L - T - R		
Control:	Uncontrolled			Uncontrolled			Stop Sign			Stop Sign		
Rights:	Include			Include			Include			Include		
Lanes:	1 0 2 0 0			0 0 1 1 0			1 0 0 0 1			0 0 0 0 0		
Volume Module:												
Base Vol:	77	799	0	0	328	59	64	0	21	0	0	0
Growth Adj:	1.00	1.00	1.00	1.00	1.00	1.00	1.00	1.00	1.00	1.00	1.00	1.00
Initial Bse:	77	799	0	0	328	59	64	0	21	0	0	0
Added Vol:	0	0	0	0	4	0	0	0	0	0	0	0
Committed P:	0	30	0	0	27	0	0	0	0	0	0	0
Initial Fut:	77	829	0	0	359	59	64	0	21	0	0	0
User Adj:	1.00	1.00	1.00	1.00	1.00	1.00	1.00	1.00	1.00	1.00	1.00	1.00
PHF Adj:	1.00	1.00	1.00	1.00	1.00	1.00	1.00	1.00	1.00	1.00	1.00	1.00
PHF Volume:	77	829	0	0	359	59	64	0	21	0	0	0
Reduct Vol:	0	0	0	0	0	0	0	0	0	0	0	0
FinalVolume:	77	829	0	0	359	59	64	0	21	0	0	0
Critical Gap Module:												
Critical Gp:	4.1	xxxx	xxxxx	xxxxx	xxxx	xxxxx	6.8	xxxx	6.9	xxxxx	xxxx	xxxxx
FollowUpTim:	2.2	xxxx	xxxxx	xxxxx	xxxx	xxxxx	3.5	xxxx	3.3	xxxxx	xxxx	xxxxx
Capacity Module:												
Cnflict Vol:	418	xxxx	xxxxx	xxxx	xxxx	xxxxx	957	xxxx	209	xxxx	xxxx	xxxxx
Potent Cap.:	1152	xxxx	xxxxx	xxxx	xxxx	xxxxx	259	xxxx	803	xxxx	xxxx	xxxxx
Move Cap.:	1152	xxxx	xxxxx	xxxx	xxxx	xxxxx	246	xxxx	803	xxxx	xxxx	xxxxx
Volume/Cap:	0.07	xxxx	xxxx	xxxx	xxxx	xxxx	0.26	xxxx	0.03	xxxx	xxxx	xxxx
Level Of Service Module:												
2Way95thQ:	0.2	xxxx	xxxxx	xxxx	xxxx	xxxxx	1.0	xxxx	0.1	xxxx	xxxx	xxxxx
Control Del:	8.3	xxxx	xxxxx	xxxxx	xxxx	xxxxx	24.7	xxxx	9.6	xxxxx	xxxx	xxxxx
LOS by Move:	A	*	*	*	*	*	C	*	A	*	*	*
Movement:	LT - LTR - RT			LT - LTR - RT			LT - LTR - RT			LT - LTR - RT		
Shared Cap.:	xxxx	xxxx	xxxxx	xxxx	xxxx	xxxxx	xxxx	xxxx	xxxxx	xxxx	xxxx	xxxxx
SharedQueue:	xxxxx	xxxx	xxxxx	xxxxx	xxxx	xxxxx	xxxxx	xxxx	xxxxx	xxxxx	xxxx	xxxxx
Shrd ConDel:	xxxxx	xxxx	xxxxx	xxxxx	xxxx	xxxxx	xxxxx	xxxx	xxxxx	xxxxx	xxxx	xxxxx
Shared LOS:	*	*	*	*	*	*	*	*	*	*	*	*
ApproachDel:	xxxxxx			xxxxxx			21.0			xxxxxx		
ApproachLOS:	*			*			C			*		

Note: Queue reported is the number of cars per lane.

Newport Banning Ranch
Year 2016 Cumulative Conditions without Project
AM Peak Hour

Level Of Service Computation Report
ICU 1(Loss as Cycle Length %) Method (Future Volume Alternative)

Intersection #4 Superior Ave/Placentia Ave

Cycle (sec):	100	Critical Vol./Cap.(X):	0.540
Loss Time (sec):	0 (Y+R=4.0 sec)	Average Delay (sec/veh):	xxxxxx
Optimal Cycle:	40	Level Of Service:	A

Street Name:	Superior Avenue						Placentia Avenue					
Approach:	North Bound			South Bound			East Bound			West Bound		
Movement:	L - T - R			L - T - R			L - T - R			L - T - R		
Control:	Protected			Protected			Permitted			Permitted		
Rights:	Include			Include			Include			Include		
Min. Green:	0	0	0	0	0	0	0	0	0	0	0	0
Lanes:	1 0 1	1 0		1 0 1	1 0		1 0 1	0 1		0 1 0	1 0	
Volume Module:												
Base Vol:	346	803	33	57	243	9	18	325	268	8	227	61
Growth Adj:	1.00	1.00	1.00	1.00	1.00	1.00	1.00	1.00	1.00	1.00	1.00	1.00
Initial Bse:	346	803	33	57	243	9	18	325	268	8	227	61
Added Vol:	40	0	0	0	4	0	0	0	44	0	0	0
Committed P:	0	30	0	12	15	0	0	5	0	4	24	0
Initial Fut:	386	833	33	69	262	9	18	330	312	12	251	61
User Adj:	1.00	1.00	1.00	1.00	1.00	1.00	1.00	1.00	1.00	1.00	1.00	1.00
PHF Adj:	1.00	1.00	1.00	1.00	1.00	1.00	1.00	1.00	1.00	1.00	1.00	1.00
PHF Volume:	386	833	33	69	262	9	18	330	312	12	251	61
Reduct Vol:	0	0	0	0	0	0	0	0	0	0	0	0
Reduced Vol:	386	833	33	69	262	9	18	330	312	12	251	61
PCE Adj:	1.00	1.00	1.00	1.00	1.00	1.00	1.00	1.00	1.00	1.00	1.00	1.00
MLF Adj:	1.00	1.00	1.00	1.00	1.00	1.00	1.00	1.00	1.00	1.00	1.00	1.00
FinalVolume:	386	833	33	69	262	9	18	330	312	12	251	61
Saturation Flow Module:												
Sat/Lane:	1600	1600	1600	1600	1600	1600	1600	1600	1600	1600	1600	1600
Adjustment:	1.00	1.00	1.00	1.00	1.00	1.00	1.00	1.00	1.00	1.00	1.00	1.00
Lanes:	1.00	1.92	0.08	1.00	1.93	0.07	1.00	1.00	1.00	0.07	1.55	0.38
Final Sat.:	1600	3078	122	1600	3094	106	1600	1600	1600	119	2479	602
Capacity Analysis Module:												
Vol/Sat:	0.24	0.27	0.27	0.04	0.08	0.08	0.01	0.21	0.20	0.01	0.10	0.10
Crit Moves:	****				****			****		****		

Newport Banning Ranch
Year 2016 Cumulative Conditions without Project
AM Peak Hour

Level Of Service Computation Report
ICU 1(Loss as Cycle Length %) Method (Future Volume Alternative)

Intersection #5 Hospital Rd/Newport Blvd

Cycle (sec):	120	Critical Vol./Cap.(X):	0.539
Loss Time (sec):	0 (Y+R=4.0 sec)	Average Delay (sec/veh):	xxxxxx
Optimal Cycle:	49	Level Of Service:	A

Street Name:	Newport Boulevard						Hospital Road					
Approach:	North Bound			South Bound			East Bound			West Bound		
Movement:	L - T - R			L - T - R			L - T - R			L - T - R		
Control:	Protected			Protected			Protected			Protected		
Rights:	Include			Include			Include			Include		
Min. Green:	0	0	0	0	0	0	0	0	0	0	0	0
Lanes:	1 0 3 0 1			1 0 3 0 1			2 0 1 0 1			1 0 1 1 0		
Volume Module:												
Base Vol:	129	1373	96	56	1066	368	197	124	199	65	224	28
Growth Adj:	1.07	1.07	1.07	1.07	1.07	1.07	1.00	1.00	1.00	1.00	1.00	1.00
Initial Bse:	138	1472	103	60	1143	394	197	124	199	65	224	28
Added Vol:	6	6	2	8	13	0	0	1	2	10	0	3
Committed P:	23	49	0	0	64	10	12	0	9	0	1	0
Initial Fut:	167	1527	105	68	1220	404	209	125	210	75	225	31
User Adj:	1.00	1.00	1.00	1.00	1.00	1.00	1.00	1.00	1.00	1.00	1.00	1.00
PHF Adj:	1.00	1.00	1.00	1.00	1.00	1.00	1.00	1.00	1.00	1.00	1.00	1.00
PHF Volume:	167	1527	105	68	1220	404	209	125	210	75	225	31
Reduct Vol:	0	0	0	0	0	0	0	0	0	0	0	0
Reduced Vol:	167	1527	105	68	1220	404	209	125	210	75	225	31
PCE Adj:	1.00	1.00	1.00	1.00	1.00	1.00	1.00	1.00	1.00	1.00	1.00	1.00
MLF Adj:	1.00	1.00	1.00	1.00	1.00	1.00	1.00	1.00	1.00	1.00	1.00	1.00
FinalVolume:	167	1527	105	68	1220	404	209	125	210	75	225	31
Saturation Flow Module:												
Sat/Lane:	1600	1600	1600	1600	1600	1600	1600	1600	1600	1600	1600	1600
Adjustment:	1.00	1.00	1.00	1.00	1.00	1.00	1.00	1.00	1.00	1.00	1.00	1.00
Lanes:	1.00	3.00	1.00	1.00	3.00	1.00	2.00	1.00	1.00	1.00	1.76	0.24
Final Sat.:	1600	4800	1600	1600	4800	1600	3200	1600	1600	1600	2813	388
Capacity Analysis Module:												
Vol/Sat:	0.10	0.32	0.07	0.04	0.25	0.25	0.07	0.08	0.13	0.05	0.08	0.08
Crit Moves:		****		****					****	****		

Newport Banning Ranch
Year 2016 Cumulative Conditions without Project
AM Peak Hour

Level Of Service Computation Report
ICU 1(Loss as Cycle Length %) Method (Future Volume Alternative)

Intersection #6 Orange St/W. Coast Hwy

Cycle (sec):	120	Critical Vol./Cap.(X):	0.814
Loss Time (sec):	0 (Y+R=4.0 sec)	Average Delay (sec/veh):	xxxxxx
Optimal Cycle:	100	Level Of Service:	D

Street Name:	Orange Street						W. Coast Highway					
Approach:	North Bound			South Bound			East Bound			West Bound		
Movement:	L - T - R			L - T - R			L - T - R			L - T - R		
Control:	Permitted			Permitted			Protected			Protected		
Rights:	Include			Include			Include			Include		
Min. Green:	0	0	0	0	0	0	0	0	0	0	0	0
Lanes:	0 1 0 0 1			0 1 0 0 1			1 0 2 1 0			1 0 3 0 1		
Volume Module:												
Base Vol:	49	1	70	40	2	19	11	3095	10	43	870	17
Growth Adj:	1.00	1.00	1.00	1.00	1.00	1.00	1.07	1.07	1.07	1.07	1.07	1.07
Initial Bse:	49	1	70	40	2	19	12	3318	11	46	933	18
Added Vol:	0	0	0	0	0	4	4	105	0	0	148	0
Committed P:	0	0	0	0	0	0	0	62	0	0	37	0
Initial Fut:	49	1	70	40	2	23	16	3485	11	46	1118	18
User Adj:	1.00	1.00	1.00	1.00	1.00	1.00	1.00	1.00	1.00	1.00	1.00	1.00
PHF Adj:	1.00	1.00	1.00	1.00	1.00	1.00	1.00	1.00	1.00	1.00	1.00	1.00
PHF Volume:	49	1	70	40	2	23	16	3485	11	46	1118	18
Reduct Vol:	0	0	0	0	0	0	0	0	0	0	0	0
Reduced Vol:	49	1	70	40	2	23	16	3485	11	46	1118	18
PCE Adj:	1.00	1.00	1.00	1.00	1.00	1.00	1.00	1.00	1.00	1.00	1.00	1.00
MLF Adj:	1.00	1.00	1.00	1.00	1.00	1.00	1.00	1.00	1.00	1.00	1.00	1.00
FinalVolume:	49	1	70	40	2	23	16	3485	11	46	1118	18
Saturation Flow Module:												
Sat/Lane:	1600	1600	1600	1600	1600	1600	1600	1600	1600	1600	1600	1600
Adjustment:	1.00	1.00	1.00	1.00	1.00	1.00	1.00	1.00	1.00	1.00	1.00	1.00
Lanes:	0.98	0.02	1.00	0.95	0.05	1.00	1.00	2.99	0.01	1.00	3.00	1.00
Final Sat.:	1568	32	1600	1524	76	1600	1600	4785	15	1600	4800	1600
Capacity Analysis Module:												
Vol/Sat:	0.03	0.03	0.04	0.03	0.03	0.01	0.01	0.73	0.73	0.03	0.23	0.01
Crit Moves:	****				****			****		****		

Newport Banning Ranch
Year 2016 Cumulative Conditions without Project
AM Peak Hour

Level Of Service Computation Report
ICU 1(Loss as Cycle Length %) Method (Future Volume Alternative)

Intersection #7 Prospect St/W. Coast Hwy

Cycle (sec):	120	Critical Vol./Cap.(X):	0.802
Loss Time (sec):	0 (Y+R=4.0 sec)	Average Delay (sec/veh):	xxxxxx
Optimal Cycle:	94	Level Of Service:	D

Street Name:	Prospect Street						W. Coast Highway					
Approach:	North Bound			South Bound			East Bound			West Bound		
Movement:	L - T - R			L - T - R			L - T - R			L - T - R		
Control:	Permitted			Permitted			Protected			Protected		
Rights:	Include			Include			Include			Include		
Min. Green:	0	0	0	0	0	0	0	0	0	0	0	0
Lanes:	0 1	0 0	1	0 0	1!	0 0	1 0	2 1	0	1 0	2 1	0
Volume Module:												
Base Vol:	19	0	33	267	0	7	17	2490	5	26	1112	34
Growth Adj:	1.00	1.00	1.00	1.00	1.00	1.00	1.07	1.07	1.07	1.07	1.07	1.07
Initial Bse:	19	0	33	267	0	7	18	2669	5	28	1192	36
Added Vol:	0	0	0	9	0	2	2	103	0	0	146	3
Committed P:	0	0	0	0	0	0	0	62	0	0	37	0
Initial Fut:	19	0	33	276	0	9	20	2834	5	28	1375	39
User Adj:	1.00	1.00	1.00	1.00	1.00	1.00	1.00	1.00	1.00	1.00	1.00	1.00
PHF Adj:	1.00	1.00	1.00	1.00	1.00	1.00	1.00	1.00	1.00	1.00	1.00	1.00
PHF Volume:	19	0	33	276	0	9	20	2834	5	28	1375	39
Reduct Vol:	0	0	0	0	0	0	0	0	0	0	0	0
Reduced Vol:	19	0	33	276	0	9	20	2834	5	28	1375	39
PCE Adj:	1.00	1.00	1.00	1.00	1.00	1.00	1.00	1.00	1.00	1.00	1.00	1.00
MLF Adj:	1.00	1.00	1.00	1.00	1.00	1.00	1.00	1.00	1.00	1.00	1.00	1.00
FinalVolume:	19	0	33	276	0	9	20	2834	5	28	1375	39
Saturation Flow Module:												
Sat/Lane:	1600	1600	1600	1600	1600	1600	1600	1600	1600	1600	1600	1600
Adjustment:	1.00	1.00	1.00	1.00	1.00	1.00	1.00	1.00	1.00	1.00	1.00	1.00
Lanes:	1.00	0.00	1.00	0.97	0.00	0.03	1.00	2.99	0.01	1.00	2.92	0.08
Final Sat.:	1600	0	1600	1549	0	51	1600	4791	9	1600	4666	134
Capacity Analysis Module:												
Vol/Sat:	0.01	0.00	0.02	0.17	0.00	0.18	0.01	0.59	0.59	0.02	0.29	0.29
Crit Moves:			****	****				****		****		

Newport Banning Ranch
Year 2016 Cumulative Conditions without Project
AM Peak Hour

Level Of Service Computation Report
ICU 1(Loss as Cycle Length %) Method (Future Volume Alternative)

Intersection #8 W. Coast Hwy/Superior Ave

Cycle (sec):	120	Critical Vol./Cap.(X):	0.716
Loss Time (sec):	0 (Y+R=4.0 sec)	Average Delay (sec/veh):	xxxxxx
Optimal Cycle:	80	Level Of Service:	C

Street Name:	Superior Avenue						W. Coast Highway					
Approach:	North Bound			South Bound			East Bound			West Bound		
Movement:	L - T - R			L - T - R			L - T - R			L - T - R		
Control:	Split Phase			Split Phase			Protected			Protected		
Rights:	Include			Ovl			Include			Include		
Min. Green:	0	0	0	0	0	0	0	0	0	0	0	0
Lanes:	1 1 0	1 0		1 1 1	0 2		2 0	3 0 1		1 0	3 1 0	
Volume Module:												
Base Vol:	168	266	114	170	165	247	709	1914	211	95	768	155
Growth Adj:	1.00	1.00	1.00	1.00	1.00	1.00	1.07	1.07	1.07	1.07	1.07	1.07
Initial Bse:	168	266	114	170	165	247	760	2052	226	102	823	166
Added Vol:	9	0	0	24	0	21	21	83	10	0	120	13
Committed P:	1	6	0	0	3	12	24	49	0	0	42	0
Initial Fut:	178	272	114	194	168	280	805	2184	236	102	985	179
User Adj:	1.00	1.00	1.00	1.00	1.00	1.00	1.00	1.00	1.00	1.00	1.00	1.00
PHF Adj:	1.00	1.00	1.00	1.00	1.00	1.00	1.00	1.00	1.00	1.00	1.00	1.00
PHF Volume:	178	272	114	194	168	280	805	2184	236	102	985	179
Reduct Vol:	0	0	0	0	0	0	0	0	0	0	0	0
Reduced Vol:	178	272	114	194	168	280	805	2184	236	102	985	179
PCE Adj:	1.00	1.00	1.00	1.00	1.00	1.00	1.00	1.00	1.00	1.00	1.00	1.00
MLF Adj:	1.00	1.00	1.00	1.00	1.00	1.00	1.00	1.00	1.00	1.00	1.00	1.00
FinalVolume:	178	272	114	194	168	280	805	2184	236	102	985	179
OvlAdjVol:						0						
Saturation Flow Module:												
Sat/Lane:	1600	1600	1600	1600	1600	1600	1600	1600	1600	1600	1600	1600
Adjustment:	1.00	1.00	1.00	1.00	1.00	1.00	1.00	1.00	1.00	1.00	1.00	1.00
Lanes:	1.00	1.39	0.61	1.61	1.39	2.00	2.00	3.00	1.00	1.00	3.38	0.62
Final Sat.:	1600	2227	973	2572	2228	3200	3200	4800	1600	1600	5415	985
Capacity Analysis Module:												
Vol/Sat:	0.11	0.12	0.12	0.08	0.08	0.09	0.25	0.45	0.15	0.06	0.18	0.18
OvlAdjV/S:						0.00						
Crit Moves:		****		****				****		****		

Newport Banning Ranch
Year 2016 Cumulative Conditions without Project
AM Peak Hour

Level Of Service Computation Report
ICU 1(Loss as Cycle Length %) Method (Future Volume Alternative)

Intersection #9 Newport Blvd/W. Coast Hwy

Cycle (sec):	120	Critical Vol./Cap.(X):	0.937
Loss Time (sec):	0 (Y+R=4.0 sec)	Average Delay (sec/veh):	xxxxxx
Optimal Cycle:	180	Level Of Service:	E

Street Name:	Newport Boulevard						W. Coast Highway					
Approach:	North Bound			South Bound			East Bound			West Bound		
Movement:	L - T - R			L - T - R			L - T - R			L - T - R		
Control:	Protected			Protected			Protected			Protected		
Rights:	Include			Include			Ignore			Ignore		
Min. Green:	0	0	0	0	0	0	0	0	0	0	0	0
Lanes:	0 0 0 0 0			2 0 0 0 1			0 0 2 0 1			0 0 3 0 1		
Volume Module:												
Base Vol:	0	0	0	383	0	288	0	2082	188	0	812	349
Growth Adj:	1.00	1.00	1.00	1.00	1.00	1.00	1.00	1.07	1.07	1.00	1.07	1.07
Initial Bse:	0	0	0	383	0	288	0	2232	202	0	870	374
Added Vol:	0	0	0	18	0	2	0	106	0	0	131	6
Committed P:	0	0	0	17	0	35	0	12	4	0	42	0
Initial Fut:	0	0	0	418	0	325	0	2350	206	0	1043	380
User Adj:	1.00	1.00	1.00	1.00	1.00	1.00	1.00	1.00	0.00	1.00	1.00	0.00
PHF Adj:	1.00	1.00	1.00	1.00	1.00	1.00	1.00	1.00	0.00	1.00	1.00	0.00
PHF Volume:	0	0	0	418	0	325	0	2350	0	0	1043	0
Reduct Vol:	0	0	0	0	0	0	0	0	0	0	0	0
Reduced Vol:	0	0	0	418	0	325	0	2350	0	0	1043	0
PCE Adj:	1.00	1.00	1.00	1.00	1.00	1.00	1.00	1.00	0.00	1.00	1.00	0.00
MLF Adj:	1.00	1.00	1.00	1.00	1.00	1.00	1.00	1.00	0.00	1.00	1.00	0.00
FinalVolume:	0	0	0	418	0	325	0	2350	0	0	1043	0
Saturation Flow Module:												
Sat/Lane:	1600	1600	1600	1600	1600	1600	1600	1600	1600	1600	1600	1600
Adjustment:	1.00	1.00	1.00	1.00	1.00	1.00	1.00	1.00	1.00	1.00	1.00	1.00
Lanes:	0.00	0.00	0.00	2.00	0.00	1.00	0.00	2.00	1.00	0.00	3.00	1.00
Final Sat.:	0	0	0	3200	0	1600	0	3200	1600	0	4800	1600
Capacity Analysis Module:												
Vol/Sat:	0.00	0.00	0.00	0.13	0.00	0.20	0.00	0.73	0.00	0.00	0.22	0.00
Crit Moves:						****		****		****		

Newport Banning Ranch
Year 2016 Cumulative Conditions without Project
AM Peak Hour

Level Of Service Computation Report
ICU 1(Loss as Cycle Length %) Method (Future Volume Alternative)

Intersection #10 Riverside Ave/W. Coast Hwy

Cycle (sec):	120	Critical Vol./Cap.(X):	0.767
Loss Time (sec):	0 (Y+R=4.0 sec)	Average Delay (sec/veh):	xxxxxx
Optimal Cycle:	80	Level Of Service:	C

Street Name:	Riverside Avenue						W. Coast Highway					
Approach:	North Bound			South Bound			East Bound			West Bound		
Movement:	L - T - R			L - T - R			L - T - R			L - T - R		
Control:	Permitted			Permitted			Protected			Protected		
Rights:	Include			Ovl			Include			Include		
Min. Green:	0	0	0	0	0	0	0	0	0	0	0	0
Lanes:	0 0 0 0 1			0 1 0 0 1			1 0 1 1 0			1 0 3 0 1		
Volume Module:												
Base Vol:	0	0	1	77	4	304	312	1893	4	17	1124	67
Growth Adj:	1.00	1.00	1.00	1.00	1.00	1.00	1.07	1.07	1.07	1.07	1.07	1.07
Initial Bse:	0	0	1	77	4	304	334	2029	4	18	1205	72
Added Vol:	0	0	0	0	0	7	6	124	0	0	142	0
Committed P:	0	0	0	2	0	0	0	103	0	0	92	1
Initial Fut:	0	0	1	79	4	311	340	2256	4	18	1439	73
User Adj:	1.00	1.00	1.00	1.00	1.00	1.00	1.00	1.00	1.00	1.00	1.00	1.00
PHF Adj:	1.00	1.00	1.00	1.00	1.00	1.00	1.00	1.00	1.00	1.00	1.00	1.00
PHF Volume:	0	0	1	79	4	311	340	2256	4	18	1439	73
Reduct Vol:	0	0	0	0	0	0	0	0	0	0	0	0
Reduced Vol:	0	0	1	79	4	311	340	2256	4	18	1439	73
PCE Adj:	1.00	1.00	1.00	1.00	1.00	1.00	1.00	1.00	1.00	1.00	1.00	1.00
MLF Adj:	1.00	1.00	1.00	1.00	1.00	1.00	1.00	1.00	1.00	1.00	1.00	1.00
FinalVolume:	0	0	1	79	4	311	340	2256	4	18	1439	73
OvlAdjVol:						0						
Saturation Flow Module:												
Sat/Lane:	1600	1600	1600	1600	1600	1600	1600	1600	1600	1600	1600	1600
Adjustment:	1.00	1.00	1.00	1.00	1.00	1.00	1.00	1.00	1.00	1.00	1.00	1.00
Lanes:	0.00	0.00	1.00	0.95	0.05	1.00	1.00	1.99	0.01	1.00	3.00	1.00
Final Sat.:	0	0	1600	1523	77	1600	1600	3194	6	1600	4800	1600
Capacity Analysis Module:												
Vol/Sat:	0.00	0.00	0.00	0.05	0.05	0.19	0.21	0.71	0.71	0.01	0.30	0.05
OvlAdjV/S:						0.00						
Crit Moves:		****		****				****		****		

Newport Banning Ranch
Year 2016 Cumulative Conditions without Project
AM Peak Hour

Level Of Service Computation Report
ICU 1(Loss as Cycle Length %) Method (Future Volume Alternative)

Intersection #11 Tustin Ave/W. Coast Hwy

Cycle (sec):	120	Critical Vol./Cap.(X):	0.770
Loss Time (sec):	0 (Y+R=4.0 sec)	Average Delay (sec/veh):	xxxxxx
Optimal Cycle:	180	Level Of Service:	C

Street Name:	Tustin Avenue						W. Coast Highway					
Approach:	North Bound			South Bound			East Bound			West Bound		
Movement:	L - T - R			L - T - R			L - T - R			L - T - R		
Control:	Permitted			Permitted			Protected			Permitted		
Rights:	Include			Include			Include			Include		
Min. Green:	0	0	0	0	0	0	0	0	0	0	0	0
Lanes:	0 0	1! 0	0	0 0	1! 0	0	1 0	1 1	0	0 0	3 0	1
Volume Module:												
Base Vol:	0	0	0	33	1	14	42	1992	1	0	1220	35
Growth Adj:	1.00	1.00	1.00	1.00	1.00	1.00	1.07	1.07	1.07	1.07	1.07	1.07
Initial Bse:	0	0	0	33	1	14	45	2135	1	0	1308	38
Added Vol:	0	0	0	0	0	0	0	124	0	0	142	0
Committed P:	0	0	0	0	0	0	0	108	0	0	93	0
Initial Fut:	0	0	0	33	1	14	45	2367	1	0	1543	38
User Adj:	1.00	1.00	1.00	1.00	1.00	1.00	1.00	1.00	1.00	1.00	1.00	1.00
PHF Adj:	1.00	1.00	1.00	1.00	1.00	1.00	1.00	1.00	1.00	1.00	1.00	1.00
PHF Volume:	0	0	0	33	1	14	45	2367	1	0	1543	38
Reduct Vol:	0	0	0	0	0	0	0	0	0	0	0	0
Reduced Vol:	0	0	0	33	1	14	45	2367	1	0	1543	38
PCE Adj:	1.00	1.00	1.00	1.00	1.00	1.00	1.00	1.00	1.00	1.00	1.00	1.00
MLF Adj:	1.00	1.00	1.00	1.00	1.00	1.00	1.00	1.00	1.00	1.00	1.00	1.00
FinalVolume:	0	0	0	33	1	14	45	2367	1	0	1543	38
Saturation Flow Module:												
Sat/Lane:	1600	1600	1600	1600	1600	1600	1600	1600	1600	1600	1600	1600
Adjustment:	1.00	1.00	1.00	1.00	1.00	1.00	1.00	1.00	1.00	1.00	1.00	1.00
Lanes:	0.00	1.00	0.00	0.69	0.02	0.29	1.00	1.99	0.01	0.00	3.00	1.00
Final Sat.:	0	1600	0	1100	33	467	1600	3199	1	0	4800	1600
Capacity Analysis Module:												
Vol/Sat:	0.00	0.00	0.00	0.02	0.03	0.03	0.03	0.74	0.74	0.00	0.32	0.02
Crit Moves:					****			****				

Newport Banning Ranch
Year 2016 Cumulative Conditions without Project
AM Peak Hour

Level Of Service Computation Report
ICU 1(Loss as Cycle Length %) Method (Future Volume Alternative)

Intersection #12 Dover Dr/W. Coast Hwy

Cycle (sec):	120	Critical Vol./Cap.(X):	0.718
Loss Time (sec):	0 (Y+R=4.0 sec)	Average Delay (sec/veh):	xxxxxx
Optimal Cycle:	81	Level Of Service:	C

Street Name:	Dover Drive									W. Coast Highway								
Approach:	North Bound			South Bound			East Bound			West Bound		
Movement:	L	- T	- R	L	- T	- R	L	- T	- R	L	- T	- R
Control:	Split Phase			Split Phase			Protected			Protected		
Rights:	Include			Include			Include			Ignore		
Min. Green:	0	0	0	0	0	0	0	0	0	0	0	0
Lanes:	1 0	1 1	0	3 0	1 0	1	2 0	2 1	0	1 0	3 0	1
Volume Module:												
Base Vol:	16	61	29	840	51	108	117	1912	25	42	1212	469
Growth Adj:	1.00	1.00	1.00	1.00	1.00	1.00	1.07	1.07	1.07	1.07	1.07	1.07
Initial Bse:	16	61	29	840	51	108	125	2050	27	45	1299	503
Added Vol:	3	0	0	44	0	7	9	112	3	0	133	102
Committed P:	0	0	0	9	0	18	10	93	0	0	91	7
Initial Fut:	19	61	29	893	51	133	144	2255	30	45	1523	612
User Adj:	1.00	1.00	1.00	1.00	1.00	1.00	1.00	1.00	1.00	1.00	1.00	0.00
PHF Adj:	1.00	1.00	1.00	1.00	1.00	1.00	1.00	1.00	1.00	1.00	1.00	0.00
PHF Volume:	19	61	29	893	51	133	144	2255	30	45	1523	0
Reduct Vol:	0	0	0	0	0	0	0	0	0	0	0	0
Reduced Vol:	19	61	29	893	51	133	144	2255	30	45	1523	0
PCE Adj:	1.00	1.00	1.00	1.00	1.00	1.00	1.00	1.00	1.00	1.00	1.00	0.00
MLF Adj:	1.00	1.00	1.00	1.00	1.00	1.00	1.00	1.00	1.00	1.00	1.00	0.00
FinalVolume:	19	61	29	893	51	133	144	2255	30	45	1523	0
Saturation Flow Module:												
Sat/Lane:	1600	1600	1600	1600	1600	1600	1600	1600	1600	1600	1600	1600
Adjustment:	1.00	1.00	1.00	1.00	1.00	1.00	1.00	1.00	1.00	1.00	1.00	1.00
Lanes:	1.00	1.36	0.64	3.00	1.00	1.00	2.00	2.96	0.04	1.00	3.00	1.00
Final Sat.:	1600	2169	1031	4800	1600	1600	3200	4737	63	1600	4800	1600
Capacity Analysis Module:												
Vol/Sat:	0.01	0.03	0.03	0.19	0.03	0.08	0.05	0.48	0.48	0.03	0.32	0.00
Crit Moves:			****	****				****		****		

Newport Banning Ranch
Year 2016 Cumulative Conditions without Project
AM Peak Hour

Level Of Service Computation Report
ICU 1(Loss as Cycle Length %) Method (Future Volume Alternative)

Intersection #13 Magnolia St/Hamilton Ave

Cycle (sec):	100	Critical Vol./Cap.(X):	0.647
Loss Time (sec):	5 (Y+R=4.0 sec)	Average Delay (sec/veh):	xxxxxx
Optimal Cycle:	32	Level Of Service:	B

Street Name:	Magnolia Street						Hamilton Avenue					
Approach:	North Bound			South Bound			East Bound			West Bound		
Movement:	L - T - R			L - T - R			L - T - R			L - T - R		
Control:	Prot+Permit			Prot+Permit			Permitted			Permitted		
Rights:	Include			Include			Include			Include		
Min. Green:	0	0	0	0	0	0	0	0	0	0	0	0
Lanes:	1 0 1	1 0		1 0 2	0 1		1 0 0	1 0		1 0 1	0 1	
Volume Module:												
Base Vol:	56	241	42	197	303	35	67	273	145	66	172	368
Growth Adj:	1.07	1.07	1.07	1.07	1.07	1.07	1.07	1.07	1.07	1.07	1.07	1.07
Initial Bse:	60	258	45	211	325	38	72	293	155	71	184	394
Added Vol:	28	64	34	0	27	9	30	48	20	12	25	0
Committed P:	2	3	0	0	6	0	0	0	3	0	0	0
Initial Fut:	90	325	79	211	358	47	102	341	178	83	209	394
User Adj:	1.00	1.00	1.00	1.00	1.00	1.00	1.00	1.00	1.00	1.00	1.00	1.00
PHF Adj:	1.00	1.00	1.00	1.00	1.00	1.00	1.00	1.00	1.00	1.00	1.00	1.00
PHF Volume:	90	325	79	211	358	47	102	341	178	83	209	394
Reduct Vol:	0	0	0	0	0	0	0	0	0	0	0	0
Reduced Vol:	90	325	79	211	358	47	102	341	178	83	209	394
PCE Adj:	1.00	1.00	1.00	1.00	1.00	1.00	1.00	1.00	1.00	1.00	1.00	1.00
MLF Adj:	1.00	1.00	1.00	1.00	1.00	1.00	1.00	1.00	1.00	1.00	1.00	1.00
FinalVolume:	90	325	79	211	358	47	102	341	178	83	209	394
Saturation Flow Module:												
Sat/Lane:	1600	1600	1600	1600	1600	1600	1600	1600	1600	1600	1600	1600
Adjustment:	1.06	1.06	1.06	1.06	1.06	1.06	1.06	1.06	1.06	1.06	1.06	1.06
Lanes:	1.00	1.61	0.39	1.00	2.00	1.00	1.00	0.66	0.34	1.00	1.00	1.00
Final Sat.:	1700	2736	664	1700	3400	1700	1700	1116	584	1700	1700	1700
Capacity Analysis Module:												
Vol/Sat:	0.05	0.12	0.12	0.12	0.11	0.03	0.06	0.31	0.31	0.05	0.12	0.23
Crit Moves:		****		****				****		****		

Newport Banning Ranch
Year 2016 Cumulative Conditions without Project
AM Peak Hour

Level Of Service Computation Report
ICU 1(Loss as Cycle Length %) Method (Future Volume Alternative)

Intersection #14 Bushard St/Hamilton Ave

Cycle (sec):	100	Critical Vol./Cap.(X):	0.473
Loss Time (sec):	5 (Y+R=4.0 sec)	Average Delay (sec/veh):	xxxxxx
Optimal Cycle:	23	Level Of Service:	A

Street Name:	Bushard Street						Hamilton Avenue					
Approach:	North Bound			South Bound			East Bound			West Bound		
Movement:	L - T - R			L - T - R			L - T - R			L - T - R		
Control:	Permitted			Permitted			Permitted			Permitted		
Rights:	Include			Include			Include			Include		
Min. Green:	0	0	0	0	0	0	0	0	0	0	0	0
Lanes:	1 0	1 1	0	1 0	1 1	0	1 0	1 1	0	1 0	1 1	0
Volume Module:												
Base Vol:	66	176	51	188	297	145	59	526	33	52	409	94
Growth Adj:	1.07	1.07	1.07	1.07	1.07	1.07	1.07	1.07	1.07	1.07	1.07	1.07
Initial Bse:	71	189	55	202	318	155	63	564	35	56	438	101
Added Vol:	0	0	0	0	0	0	0	82	0	0	37	0
Committed P:	0	0	0	0	0	0	0	0	0	0	0	0
Initial Fut:	71	189	55	202	318	155	63	646	35	56	475	101
User Adj:	1.00	1.00	1.00	1.00	1.00	1.00	1.00	1.00	1.00	1.00	1.00	1.00
PHF Adj:	1.00	1.00	1.00	1.00	1.00	1.00	1.00	1.00	1.00	1.00	1.00	1.00
PHF Volume:	71	189	55	202	318	155	63	646	35	56	475	101
Reduct Vol:	0	0	0	0	0	0	0	0	0	0	0	0
Reduced Vol:	71	189	55	202	318	155	63	646	35	56	475	101
PCE Adj:	1.00	1.00	1.00	1.00	1.00	1.00	1.00	1.00	1.00	1.00	1.00	1.00
MLF Adj:	1.00	1.00	1.00	1.00	1.00	1.00	1.00	1.00	1.00	1.00	1.00	1.00
FinalVolume:	71	189	55	202	318	155	63	646	35	56	475	101
Saturation Flow Module:												
Sat/Lane:	1600	1600	1600	1600	1600	1600	1600	1600	1600	1600	1600	1600
Adjustment:	1.06	1.06	1.06	1.06	1.06	1.06	1.06	1.06	1.06	1.06	1.06	1.06
Lanes:	1.00	1.55	0.45	1.00	1.34	0.66	1.00	1.90	0.10	1.00	1.65	0.35
Final Sat.:	1700	2636	764	1700	2285	1115	1700	3223	177	1700	2805	595
Capacity Analysis Module:												
Vol/Sat:	0.04	0.07	0.07	0.12	0.14	0.14	0.04	0.20	0.20	0.03	0.17	0.17
Crit Moves:		****		****				****		****		

Newport Banning Ranch
Year 2016 Cumulative Conditions without Project
AM Peak Hour

Level Of Service Computation Report
ICU 1(Loss as Cycle Length %) Method (Future Volume Alternative)

Intersection #15 Brookhurst St/Hamilton Ave (Victoria St)

Cycle (sec):	100	Critical Vol./Cap.(X):	0.726
Loss Time (sec):	5 (Y+R=4.0 sec)	Average Delay (sec/veh):	xxxxxx
Optimal Cycle:	40	Level Of Service:	C

Street Name:	Brookhurst						Hamilton Avenue (Victoria Street)					
Approach:	North Bound			South Bound			East Bound			West Bound		
Movement:	L - T - R			L - T - R			L - T - R			L - T - R		
Control:	Protected			Protected			Prot+Permit			Prot+Permit		
Rights:	Include			Include			Include			Include		
Min. Green:	0	0	0	0	0	0	0	0	0	0	0	0
Lanes:	1 0 3	0 1		2 0 2	1 0		1 0 1	1 0		1 0 2	0 1	
Volume Module:												
Base Vol:	59	289	321	501	483	110	95	683	47	124	348	277
Growth Adj:	1.07	1.07	1.07	1.07	1.07	1.07	1.07	1.07	1.07	1.07	1.07	1.07
Initial Bse:	63	310	344	537	518	118	102	732	50	133	373	297
Added Vol:	0	3	0	4	3	21	64	18	0	1	16	11
Committed P:	0	1	0	0	3	0	0	0	0	0	0	0
Initial Fut:	63	314	344	541	524	139	166	750	50	134	389	308
User Adj:	1.00	1.00	1.00	1.00	1.00	1.00	1.00	1.00	1.00	1.00	1.00	1.00
PHF Adj:	1.00	1.00	1.00	1.00	1.00	1.00	1.00	1.00	1.00	1.00	1.00	1.00
PHF Volume:	63	314	344	541	524	139	166	750	50	134	389	308
Reduct Vol:	0	0	0	0	0	0	0	0	0	0	0	0
Reduced Vol:	63	314	344	541	524	139	166	750	50	134	389	308
PCE Adj:	1.00	1.00	1.00	1.00	1.00	1.00	1.00	1.00	1.00	1.00	1.00	1.00
MLF Adj:	1.00	1.00	1.00	1.00	1.00	1.00	1.00	1.00	1.00	1.00	1.00	1.00
FinalVolume:	63	314	344	541	524	139	166	750	50	134	389	308
Saturation Flow Module:												
Sat/Lane:	1600	1600	1600	1600	1600	1600	1600	1600	1600	1600	1600	1600
Adjustment:	1.06	1.06	1.06	1.06	1.06	1.06	1.06	1.06	1.06	1.06	1.06	1.06
Lanes:	1.00	3.00	1.00	2.00	2.37	0.63	1.00	1.87	0.13	1.00	2.00	1.00
Final Sat.:	1700	5100	1700	3400	4031	1069	1700	3186	214	1700	3400	1700
Capacity Analysis Module:												
Vol/Sat:	0.04	0.06	0.20	0.16	0.13	0.13	0.10	0.24	0.24	0.08	0.11	0.18
Crit Moves:			****	****				****		****		

Newport Banning Ranch
Year 2016 Cumulative Conditions without Project
AM Peak Hour

Level Of Service Computation Report
ICU 1(Loss as Cycle Length %) Method (Future Volume Alternative)

Intersection #16 Magnolia St/Banning Ave

Cycle (sec):	100	Critical Vol./Cap.(X):	0.258
Loss Time (sec):	5 (Y+R=4.0 sec)	Average Delay (sec/veh):	xxxxxx
Optimal Cycle:	16	Level Of Service:	A

Street Name:	Magnolia Street									Banning Avenue								
Approach:	North Bound			South Bound			East Bound			West Bound		
Movement:	L	- T	- R	L	- T	- R	L	- T	- R	L	- T	- R
Control:	Protected			Protected			Split Phase			Split Phase		
Rights:	Include			Include			Include			Include		
Min. Green:	0	0	0	0	0	0	0	0	0	0	0	0
Lanes:	0 0	1 1	0	1 0	2 0	0	0 0	0 0	0	2 0	0 0	1
Volume Module:												
Base Vol:	0	197	37	82	376	0	0	0	0	62	0	112
Growth Adj:	1.07	1.07	1.07	1.07	1.07	1.07	1.07	1.07	1.07	1.07	1.07	1.07
Initial Bse:	0	211	40	88	403	0	0	0	0	66	0	120
Added Vol:	0	22	1	2	49	0	0	0	0	0	0	1
Committed P:	0	7	0	0	12	0	0	0	0	0	0	0
Initial Fut:	0	240	41	90	464	0	0	0	0	66	0	121
User Adj:	1.00	1.00	1.00	1.00	1.00	1.00	1.00	1.00	1.00	1.00	1.00	1.00
PHF Adj:	1.00	1.00	1.00	1.00	1.00	1.00	1.00	1.00	1.00	1.00	1.00	1.00
PHF Volume:	0	240	41	90	464	0	0	0	0	66	0	121
Reduct Vol:	0	0	0	0	0	0	0	0	0	0	0	0
Reduced Vol:	0	240	41	90	464	0	0	0	0	66	0	121
PCE Adj:	1.00	1.00	1.00	1.00	1.00	1.00	1.00	1.00	1.00	1.00	1.00	1.00
MLF Adj:	1.00	1.00	1.00	1.00	1.00	1.00	1.00	1.00	1.00	1.00	1.00	1.00
FinalVolume:	0	240	41	90	464	0	0	0	0	66	0	121
Saturation Flow Module:												
Sat/Lane:	1600	1600	1600	1600	1600	1600	1600	1600	1600	1600	1600	1600
Adjustment:	1.06	1.06	1.06	1.06	1.06	1.06	1.06	1.06	1.06	1.06	1.06	1.06
Lanes:	0.00	1.71	0.29	1.00	2.00	0.00	0.00	0.00	0.00	2.00	0.00	1.00
Final Sat.:	0	2908	492	1700	3400	0	0	0	0	3400	0	1700
Capacity Analysis Module:												
Vol/Sat:	0.00	0.08	0.08	0.05	0.14	0.00	0.00	0.00	0.00	0.02	0.00	0.07
Crit Moves:	****				****							****

Newport Banning Ranch
Year 2016 Cumulative Conditions without Project
AM Peak Hour

Level Of Service Computation Report
2000 HCM 4-Way Stop Method (Future Volume Alternative)

Intersection #17 Bushard St/Banning Ave

Cycle (sec):	100	Critical Vol./Cap.(X):	0.305
Loss Time (sec):	5 (Y+R=4.0 sec)	Average Delay (sec/veh):	10.3
Optimal Cycle:	0	Level Of Service:	B

Street Name:	Bushard Street						Banning Avenue					
Approach:	North Bound			South Bound			East Bound			West Bound		
Movement:	L - T - R			L - T - R			L - T - R			L - T - R		
Control:	Stop Sign			Stop Sign			Stop Sign			Stop Sign		
Rights:	Include			Include			Include			Include		
Min. Green:	0	0	0	0	0	0	0	0	0	0	0	0
Lanes:	1 0 1	1 0		1 0 1	1 0		1 0 0	1 0		1 0 0	1 0	
Volume Module:												
Base Vol:	14	86	15	16	220	121	53	84	28	7	114	19
Growth Adj:	1.07	1.07	1.07	1.07	1.07	1.07	1.07	1.07	1.07	1.07	1.07	1.07
Initial Bse:	15	92	16	17	236	130	57	90	30	8	122	20
Added Vol:	1	0	0	0	0	0	0	1	1	0	2	0
Committed P:	0	0	0	0	3	0	0	0	0	0	0	0
Initial Fut:	16	92	16	17	239	130	57	91	31	8	124	20
User Adj:	1.00	1.00	1.00	1.00	1.00	1.00	1.00	1.00	1.00	1.00	1.00	1.00
PHF Adj:	1.00	1.00	1.00	1.00	1.00	1.00	1.00	1.00	1.00	1.00	1.00	1.00
PHF Volume:	16	92	16	17	239	130	57	91	31	8	124	20
Reduct Vol:	0	0	0	0	0	0	0	0	0	0	0	0
Reduced Vol:	16	92	16	17	239	130	57	91	31	8	124	20
PCE Adj:	1.00	1.00	1.00	1.00	1.00	1.00	1.00	1.00	1.00	1.00	1.00	1.00
MLF Adj:	1.00	1.00	1.00	1.00	1.00	1.00	1.00	1.00	1.00	1.00	1.00	1.00
FinalVolume:	16	92	16	17	239	130	57	91	31	8	124	20
Saturation Flow Module:												
Adjustment:	1.00	1.00	1.00	1.00	1.00	1.00	1.00	1.00	1.00	1.00	1.00	1.00
Lanes:	1.00	1.70	0.30	1.00	1.30	0.70	1.00	0.75	0.25	1.00	0.86	0.14
Final Sat.:	493	915	163	544	782	453	523	434	148	518	490	80
Capacity Analysis Module:												
Vol/Sat:	0.03	0.10	0.10	0.03	0.31	0.29	0.11	0.21	0.21	0.01	0.25	0.25
Crit Moves:		****			****			****				****
Delay/Veh:	9.8	9.6	9.5	9.3	10.8	10.1	10.0	10.0	10.0	9.4	10.5	10.5
Delay Adj:	1.00	1.00	1.00	1.00	1.00	1.00	1.00	1.00	1.00	1.00	1.00	1.00
AdjDel/Veh:	9.8	9.6	9.5	9.3	10.8	10.1	10.0	10.0	10.0	9.4	10.5	10.5
LOS by Move:	A	A	A	A	B	B	A	A	A	A	B	B
ApproachDel:		9.6			10.5			10.0			10.5	
Delay Adj:		1.00			1.00			1.00			1.00	
ApprAdjDel:		9.6			10.5			10.0			10.5	
LOS by Appr:		A			B			A			B	
AllWayAvgQ:	0.0	0.1	0.1	0.0	0.4	0.4	0.1	0.2	0.2	0.0	0.3	0.3

Newport Banning Ranch
Year 2016 Cumulative Conditions without Project
AM Peak Hour

Note: Queue reported is the number of cars per lane.

Newport Banning Ranch
Year 2016 Cumulative Conditions without Project
AM Peak Hour

Level Of Service Computation Report
ICU 1(Loss as Cycle Length %) Method (Future Volume Alternative)

Intersection #18 Brookhurst St/Banning Ave

Cycle (sec):	100	Critical Vol./Cap.(X):	0.270
Loss Time (sec):	5 (Y+R=4.0 sec)	Average Delay (sec/veh):	xxxxxx
Optimal Cycle:	17	Level Of Service:	A

Street Name:	Brookhurst Street						Banning Avenue					
Approach:	North Bound			South Bound			East Bound			West Bound		
Movement:	L - T - R			L - T - R			L - T - R			L - T - R		
Control:	Protected			Protected			Split Phase			Split Phase		
Rights:	Include			Include			Include			Include		
Min. Green:	0	0	0	0	0	0	0	0	0	0	0	0
Lanes:	1 0 3	0 0		0 0 2	1 0		1 0 0	0 1		0 0 0	0 0	
Volume Module:												
Base Vol:	7	477	0	0	535	102	126	0	14	0	0	0
Growth Adj:	1.07	1.07	1.07	1.07	1.07	1.07	1.07	1.07	1.07	1.07	1.07	1.07
Initial Bse:	8	511	0	0	574	109	135	0	15	0	0	0
Added Vol:	0	2	0	0	2	2	1	0	0	0	0	0
Committed P:	0	3	0	0	6	0	0	0	0	0	0	0
Initial Fut:	8	516	0	0	582	111	136	0	15	0	0	0
User Adj:	1.00	1.00	1.00	1.00	1.00	1.00	1.00	1.00	1.00	1.00	1.00	1.00
PHF Adj:	1.00	1.00	1.00	1.00	1.00	1.00	1.00	1.00	1.00	1.00	1.00	1.00
PHF Volume:	8	516	0	0	582	111	136	0	15	0	0	0
Reduct Vol:	0	0	0	0	0	0	0	0	0	0	0	0
Reduced Vol:	8	516	0	0	582	111	136	0	15	0	0	0
PCE Adj:	1.00	1.00	1.00	1.00	1.00	1.00	1.00	1.00	1.00	1.00	1.00	1.00
MLF Adj:	1.00	1.00	1.00	1.00	1.00	1.00	1.00	1.00	1.00	1.00	1.00	1.00
FinalVolume:	8	516	0	0	582	111	136	0	15	0	0	0
Saturation Flow Module:												
Sat/Lane:	1600	1600	1600	1600	1600	1600	1600	1600	1600	1600	1600	1600
Adjustment:	1.06	1.06	1.06	1.06	1.06	1.06	1.06	1.06	1.06	1.06	1.06	1.06
Lanes:	1.00	3.00	0.00	0.00	2.52	0.48	1.00	0.00	1.00	0.00	0.00	0.00
Final Sat.:	1700	5100	0	0	4280	820	1700	0	1700	0	0	0
Capacity Analysis Module:												
Vol/Sat:	0.00	0.10	0.00	0.00	0.14	0.14	0.08	0.00	0.01	0.00	0.00	0.00
Crit Moves:	****				****		****					

Newport Banning Ranch
Year 2016 Cumulative Conditions without Project
AM Peak Hour

Level Of Service Computation Report
ICU 1(Loss as Cycle Length %) Method (Future Volume Alternative)

Intersection #19 Magnolia St/PCH

Cycle (sec):	120	Critical Vol./Cap.(X):	0.543
Loss Time (sec):	6 (Y+R=4.0 sec)	Average Delay (sec/veh):	xxxxxx
Optimal Cycle:	28	Level Of Service:	A

Street Name:	Magnolia Street						Pacific Coast Highway					
Approach:	North Bound			South Bound			East Bound			West Bound		
Movement:	L - T - R			L - T - R			L - T - R			L - T - R		
Control:	Split Phase			Split Phase			Protected			Protected		
Rights:	Include			Include			Include			Include		
Min. Green:	0	0	0	0	0	0	0	0	0	0	0	0
Lanes:	1 0 0 1 0			1 1 0 0 1			1 0 3 0 1			1 0 3 0 1		
Volume Module:												
Base Vol:	3	24	7	232	41	137	116	1607	17	18	614	50
Growth Adj:	1.07	1.07	1.07	1.07	1.07	1.07	1.07	1.07	1.07	1.07	1.07	1.07
Initial Bse:	3	26	8	249	44	147	124	1723	18	19	658	54
Added Vol:	0	0	0	24	0	25	16	81	0	0	144	7
Committed P:	0	0	0	12	0	0	0	35	0	0	21	7
Initial Fut:	3	26	8	285	44	172	140	1839	18	19	823	68
User Adj:	1.00	1.00	1.00	1.00	1.00	1.00	1.00	1.00	1.00	1.00	1.00	1.00
PHF Adj:	1.00	1.00	1.00	1.00	1.00	1.00	1.00	1.00	1.00	1.00	1.00	1.00
PHF Volume:	3	26	8	285	44	172	140	1839	18	19	823	68
Reduct Vol:	0	0	0	0	0	0	0	0	0	0	0	0
Reduced Vol:	3	26	8	285	44	172	140	1839	18	19	823	68
PCE Adj:	1.00	1.00	1.00	1.00	1.00	1.00	1.00	1.00	1.00	1.00	1.00	1.00
MLF Adj:	1.00	1.00	1.00	1.00	1.00	1.00	1.00	1.00	1.00	1.00	1.00	1.00
FinalVolume:	3	26	8	285	44	172	140	1839	18	19	823	68
Saturation Flow Module:												
Sat/Lane:	1600	1600	1600	1600	1600	1600	1600	1600	1600	1600	1600	1600
Adjustment:	1.06	1.06	1.06	1.06	1.06	1.06	1.06	1.06	1.06	1.06	1.06	1.06
Lanes:	1.00	0.77	0.23	1.73	0.27	1.00	1.00	3.00	1.00	1.00	3.00	1.00
Final Sat.:	1700	1316	384	2945	455	1700	1700	5100	1700	1700	5100	1700
Capacity Analysis Module:												
Vol/Sat:	0.00	0.02	0.02	0.10	0.10	0.10	0.08	0.36	0.01	0.01	0.16	0.04
Crit Moves:		****				****		****		****		

Newport Banning Ranch
Year 2016 Cumulative Conditions without Project
AM Peak Hour

Level Of Service Computation Report
ICU 1(Loss as Cycle Length %) Method (Future Volume Alternative)

Intersection #20 Brookhurst St/Bushard St

Cycle (sec):	100	Critical Vol./Cap.(X):	0.347
Loss Time (sec):	5 (Y+R=4.0 sec)	Average Delay (sec/veh):	xxxxxx
Optimal Cycle:	19	Level Of Service:	A

Street Name:	Brookhurst Street						Bushard Street					
Approach:	North Bound			South Bound			East Bound			West Bound		
Movement:	L - T - R			L - T - R			L - T - R			L - T - R		
Control:	Protected			Protected			Permitted			Permitted		
Rights:	Include			Include			Include			Include		
Min. Green:	0	0	0	0	0	0	0	0	0	0	0	0
Lanes:	1 0 2	1 0		1 0 3	0 1		1 0 0	0 1		0 0 0	1 0	
Volume Module:												
Base Vol:	79	427	2	2	487	10	8	0	210	0	1	4
Growth Adj:	1.07	1.07	1.07	1.07	1.07	1.07	1.07	1.07	1.07	1.07	1.07	1.07
Initial Bse:	85	458	2	2	522	11	9	0	225	0	1	4
Added Vol:	3	2	0	0	2	0	0	0	6	0	0	0
Committed P:	3	6	0	0	9	0	0	0	6	0	0	0
Initial Fut:	91	466	2	2	533	11	9	0	237	0	1	4
User Adj:	1.00	1.00	1.00	1.00	1.00	1.00	1.00	1.00	1.00	1.00	1.00	1.00
PHF Adj:	1.00	1.00	1.00	1.00	1.00	1.00	1.00	1.00	1.00	1.00	1.00	1.00
PHF Volume:	91	466	2	2	533	11	9	0	237	0	1	4
Reduct Vol:	0	0	0	0	0	0	0	0	0	0	0	0
Reduced Vol:	91	466	2	2	533	11	9	0	237	0	1	4
PCE Adj:	1.00	1.00	1.00	1.00	1.00	1.00	1.00	1.00	1.00	1.00	1.00	1.00
MLF Adj:	1.00	1.00	1.00	1.00	1.00	1.00	1.00	1.00	1.00	1.00	1.00	1.00
FinalVolume:	91	466	2	2	533	11	9	0	237	0	1	4
Saturation Flow Module:												
Sat/Lane:	1600	1600	1600	1600	1600	1600	1600	1600	1600	1600	1600	1600
Adjustment:	1.06	1.06	1.06	1.06	1.06	1.06	1.06	1.06	1.06	1.06	1.06	1.06
Lanes:	1.00	2.99	0.01	1.00	3.00	1.00	1.00	0.00	1.00	0.00	0.20	0.80
Final Sat.:	1700	5077	23	1700	5100	1700	1700	0	1700	0	340	1360
Capacity Analysis Module:												
Vol/Sat:	0.05	0.09	0.09	0.00	0.10	0.01	0.01	0.00	0.14	0.00	0.00	0.00
Crit Moves:	****				****				****	****		

Newport Banning Ranch
Year 2016 Cumulative Conditions without Project
AM Peak Hour

Level Of Service Computation Report
ICU 1(Loss as Cycle Length %) Method (Future Volume Alternative)

Intersection #21 Brookhurst St/PCH

Cycle (sec):	120	Critical Vol./Cap.(X):	0.632
Loss Time (sec):	6 (Y+R=4.0 sec)	Average Delay (sec/veh):	xxxxxx
Optimal Cycle:	34	Level Of Service:	B

Street Name:	Brookhurst Street						Pacific Coast HIghway					
Approach:	North Bound			South Bound			East Bound			West Bound		
Movement:	L - T - R			L - T - R			L - T - R			L - T - R		
Control:	Split Phase			Split Phase			Protected			Protected		
Rights:	Include			Include			Include			Ovl		
Min. Green:	0	0	0	0	0	0	0	0	0	0	0	0
Lanes:	1 0 0 1 0			2 0 1 0 1			1 0 3 0 1			1 0 3 0 1		
Volume Module:												
Base Vol:	4	19	12	513	6	117	166	1721	2	6	639	305
Growth Adj:	1.07	1.07	1.07	1.07	1.07	1.07	1.07	1.07	1.07	1.07	1.07	1.07
Initial Bse:	4	20	13	550	6	125	178	1845	2	6	685	327
Added Vol:	0	0	0	6	0	2	2	103	0	0	148	3
Committed P:	0	0	0	15	0	0	0	47	0	0	28	9
Initial Fut:	4	20	13	571	6	127	180	1995	2	6	861	339
User Adj:	1.00	1.00	1.00	1.00	1.00	1.00	1.00	1.00	1.00	1.00	1.00	1.00
PHF Adj:	1.00	1.00	1.00	1.00	1.00	1.00	1.00	1.00	1.00	1.00	1.00	1.00
PHF Volume:	4	20	13	571	6	127	180	1995	2	6	861	339
Reduct Vol:	0	0	0	0	0	0	0	0	0	0	0	0
Reduced Vol:	4	20	13	571	6	127	180	1995	2	6	861	339
PCE Adj:	1.00	1.00	1.00	1.00	1.00	1.00	1.00	1.00	1.00	1.00	1.00	1.00
MLF Adj:	1.00	1.00	1.00	1.00	1.00	1.00	1.00	1.00	1.00	1.00	1.00	1.00
FinalVolume:	4	20	13	571	6	127	180	1995	2	6	861	339
OvlAdjVol:												53
Saturation Flow Module:												
Sat/Lane:	1600	1600	1600	1600	1600	1600	1600	1600	1600	1600	1600	1600
Adjustment:	1.06	1.06	1.06	1.06	1.06	1.06	1.06	1.06	1.06	1.06	1.06	1.06
Lanes:	1.00	0.61	0.39	2.00	1.00	1.00	1.00	3.00	1.00	1.00	3.00	1.00
Final Sat.:	1700	1042	658	3400	1700	1700	1700	5100	1700	1700	5100	1700
Capacity Analysis Module:												
Vol/Sat:	0.00	0.02	0.02	0.17	0.00	0.07	0.11	0.39	0.00	0.00	0.17	0.20
OvlAdjV/S:												0.03
Crit Moves:		****		****				****		****		

Newport Banning Ranch
Year 2016 Cumulative Conditions without Project
AM Peak Hour

Level Of Service Computation Report
ICU 1(Loss as Cycle Length %) Method (Future Volume Alternative)

Intersection #22 Placentia Ave/Victoria St

Cycle (sec):	100	Critical Vol./Cap.(X):	0.858
Loss Time (sec):	0 (Y+R=4.0 sec)	Average Delay (sec/veh):	xxxxxx
Optimal Cycle:	161	Level Of Service:	D

Street Name:	Placentia Avenue						Victoria Street					
Approach:	North Bound			South Bound			East Bound			West Bound		
Movement:	L - T - R			L - T - R			L - T - R			L - T - R		
Control:	Protected			Protected			Protected			Protected		
Rights:	Include			Include			Ovl			Include		
Min. Green:	0	0	0	0	0	0	0	0	0	0	0	0
Lanes:	2 0 2	0 1		1 0 2	0 1		1 0 2	0 1		1 0 2	0 1	
Volume Module:												
Base Vol:	271	404	169	122	559	45	80	1192	464	179	493	101
Growth Adj:	1.07	1.07	1.07	1.07	1.07	1.07	1.07	1.07	1.07	1.07	1.07	1.07
Initial Bse:	291	433	181	131	599	48	86	1278	497	192	528	108
Added Vol:	11	9	93	0	16	0	0	20	4	74	19	0
Committed P:	0	0	0	0	0	0	0	0	0	0	0	0
Initial Fut:	302	442	274	131	615	48	86	1298	501	266	547	108
User Adj:	1.00	1.00	1.00	1.00	1.00	1.00	1.00	1.00	1.00	1.00	1.00	1.00
PHF Adj:	1.00	1.00	1.00	1.00	1.00	1.00	1.00	1.00	1.00	1.00	1.00	1.00
PHF Volume:	302	442	274	131	615	48	86	1298	501	266	547	108
Reduct Vol:	0	0	0	0	0	0	0	0	0	0	0	0
Reduced Vol:	302	442	274	131	615	48	86	1298	501	266	547	108
PCE Adj:	1.00	1.00	1.00	1.00	1.00	1.00	1.00	1.00	1.00	1.00	1.00	1.00
MLF Adj:	1.00	1.00	1.00	1.00	1.00	1.00	1.00	1.00	1.00	1.00	1.00	1.00
FinalVolume:	302	442	274	131	615	48	86	1298	501	266	547	108
OvlAdjVol:									351			
Saturation Flow Module:												
Sat/Lane:	1600	1600	1600	1600	1600	1600	1600	1600	1600	1600	1600	1600
Adjustment:	1.00	1.00	1.00	1.00	1.00	1.00	1.00	1.00	1.00	1.00	1.00	1.00
Lanes:	2.00	2.00	1.00	1.00	2.00	1.00	1.00	2.00	1.00	1.00	2.00	1.00
Final Sat.:	3200	3200	1600	1600	3200	1600	1600	3200	1600	1600	3200	1600
Capacity Analysis Module:												
Vol/Sat:	0.09	0.14	0.17	0.08	0.19	0.03	0.05	0.41	0.31	0.17	0.17	0.07
OvlAdjV/S:									0.22			
Crit Moves:	****				****			****		****		

Newport Banning Ranch
Year 2016 Cumulative Conditions without Project
AM Peak Hour

Level Of Service Computation Report
ICU 1(Loss as Cycle Length %) Method (Future Volume Alternative)

Intersection #23 Pomona Ave/Victoria St

Cycle (sec):	100	Critical Vol./Cap.(X):	0.711
Loss Time (sec):	0 (Y+R=4.0 sec)	Average Delay (sec/veh):	xxxxxx
Optimal Cycle:	50	Level Of Service:	C

Street Name:	Pomona Avenue						Victoria Street					
Approach:	North Bound			South Bound			East Bound			West Bound		
Movement:	L - T - R			L - T - R			L - T - R			L - T - R		
Control:	Permitted			Permitted			Permitted			Permitted		
Rights:	Include			Include			Include			Include		
Min. Green:	0	0	0	0	0	0	0	0	0	0	0	0
Lanes:	1 0 0 1 0			1 0 0 1 0			1 0 2 0 1			1 0 2 0 1		
Volume Module:												
Base Vol:	32	89	77	10	110	14	15	1486	52	86	690	18
Growth Adj:	1.07	1.07	1.07	1.07	1.07	1.07	1.07	1.07	1.07	1.07	1.07	1.07
Initial Bse:	34	95	83	11	118	15	16	1593	56	92	740	19
Added Vol:	1	0	3	0	0	0	0	113	0	0	92	0
Committed P:	0	0	0	0	0	0	0	0	0	0	0	0
Initial Fut:	35	95	86	11	118	15	16	1706	56	92	832	19
User Adj:	1.00	1.00	1.00	1.00	1.00	1.00	1.00	1.00	1.00	1.00	1.00	1.00
PHF Adj:	1.00	1.00	1.00	1.00	1.00	1.00	1.00	1.00	1.00	1.00	1.00	1.00
PHF Volume:	35	95	86	11	118	15	16	1706	56	92	832	19
Reduct Vol:	0	0	0	0	0	0	0	0	0	0	0	0
Reduced Vol:	35	95	86	11	118	15	16	1706	56	92	832	19
PCE Adj:	1.00	1.00	1.00	1.00	1.00	1.00	1.00	1.00	1.00	1.00	1.00	1.00
MLF Adj:	1.00	1.00	1.00	1.00	1.00	1.00	1.00	1.00	1.00	1.00	1.00	1.00
FinalVolume:	35	95	86	11	118	15	16	1706	56	92	832	19
Saturation Flow Module:												
Sat/Lane:	1600	1600	1600	1600	1600	1600	1600	1600	1600	1600	1600	1600
Adjustment:	1.00	1.00	1.00	1.00	1.00	1.00	1.00	1.00	1.00	1.00	1.00	1.00
Lanes:	1.00	0.53	0.47	1.00	0.89	0.11	1.00	2.00	1.00	1.00	2.00	1.00
Final Sat.:	1600	844	756	1600	1419	181	1600	3200	1600	1600	3200	1600
Capacity Analysis Module:												
Vol/Sat:	0.02	0.11	0.11	0.01	0.08	0.08	0.01	0.53	0.03	0.06	0.26	0.01
Crit Moves:		****		****				****		****		

Newport Banning Ranch
Year 2016 Cumulative Conditions without Project
AM Peak Hour

Level Of Service Computation Report
ICU 1(Loss as Cycle Length %) Method (Future Volume Alternative)

Intersection #24 Harbor Blvd/Victoria St

Cycle (sec):	100	Critical Vol./Cap.(X):	0.790
Loss Time (sec):	0 (Y+R=4.0 sec)	Average Delay (sec/veh):	xxxxxx
Optimal Cycle:	109	Level Of Service:	C

Street Name:	Harbor Boulevard						Victoria Street					
Approach:	North Bound			South Bound			East Bound			West Bound		
Movement:	L - T - R			L - T - R			L - T - R			L - T - R		
Control:	Protected			Protected			Protected			Protected		
Rights:	Include			Ovl			Include			Include		
Min. Green:	0	0	0	0	0	0	0	0	0	0	0	0
Lanes:	1 0 3 0 1			1 0 3 0 1			2 0 1 1 0			2 0 2 0 1		
Volume Module:												
Base Vol:	60	615	90	119	933	166	248	1272	89	135	623	109
Growth Adj:	1.07	1.07	1.07	1.07	1.07	1.07	1.07	1.07	1.07	1.07	1.07	1.07
Initial Bse:	64	659	96	128	1000	178	266	1364	95	145	668	117
Added Vol:	5	29	27	2	20	9	18	97	1	8	78	5
Committed P:	0	0	0	0	0	0	0	0	0	0	0	0
Initial Fut:	69	688	123	130	1020	187	284	1461	96	153	746	122
User Adj:	1.00	1.00	1.00	1.00	1.00	1.00	1.00	1.00	1.00	1.00	1.00	1.00
PHF Adj:	1.00	1.00	1.00	1.00	1.00	1.00	1.00	1.00	1.00	1.00	1.00	1.00
PHF Volume:	69	688	123	130	1020	187	284	1461	96	153	746	122
Reduct Vol:	0	0	0	0	0	0	0	0	0	0	0	0
Reduced Vol:	69	688	123	130	1020	187	284	1461	96	153	746	122
PCE Adj:	1.00	1.00	1.00	1.00	1.00	1.00	1.00	1.00	1.00	1.00	1.00	1.00
MLF Adj:	1.00	1.00	1.00	1.00	1.00	1.00	1.00	1.00	1.00	1.00	1.00	1.00
FinalVolume:	69	688	123	130	1020	187	284	1461	96	153	746	122
OvlAdjVol:						45						
Saturation Flow Module:												
Sat/Lane:	1600	1600	1600	1600	1600	1600	1600	1600	1600	1600	1600	1600
Adjustment:	1.00	1.00	1.00	1.00	1.00	1.00	1.00	1.00	1.00	1.00	1.00	1.00
Lanes:	1.00	3.00	1.00	1.00	3.00	1.00	2.00	1.88	0.12	2.00	2.00	1.00
Final Sat.:	1600	4800	1600	1600	4800	1600	3200	3002	198	3200	3200	1600
Capacity Analysis Module:												
Vol/Sat:	0.04	0.14	0.08	0.08	0.21	0.12	0.09	0.49	0.49	0.05	0.23	0.08
OvlAdjV/S:						0.03						
Crit Moves:	****				****			****		****		

Newport Banning Ranch
Year 2016 Cumulative Conditions without Project
AM Peak Hour

Level Of Service Computation Report
ICU 1(Loss as Cycle Length %) Method (Future Volume Alternative)

Intersection #25 Newport Blvd/Victoria St [Ramp]

Cycle (sec):	120	Critical Vol./Cap.(X):	0.621
Loss Time (sec):	0 (Y+R=4.0 sec)	Average Delay (sec/veh):	xxxxxx
Optimal Cycle:	49	Level Of Service:	B

Street Name:	Newport Boulevard									Victoria Street								
Approach:	North Bound					South Bound				East Bound					West Bound			
Movement:	L	-	T	-	R	L	-	T	- R	L	-	T	-	R	L	-	T	- R
Control:	Permitted					Permitted				Protected					Protected			
Rights:	Include					Ignore				Include					Include			
Min. Green:	0	0	0	0	0	0	0	0		0	0	0	0		0	0	0	
Lanes:	0	0	0	0	0	1	1	2	0 1	0	0	2	1	0	1	0	1	0 0
Volume Module:																		
Base Vol:	0	0	0	304	706	749				0	1629	30			77	279	0	
Growth Adj:	1.07	1.07	1.07	1.07	1.07	1.07				1.07	1.07	1.07			1.07	1.07	1.07	
Initial Bse:	0	0	0	326	757	803				0	1746	32			83	299	0	
Added Vol:	0	0	0	14	0	88				0	133	0			0	0	0	
Committed P:	0	0	0	0	0	0				0	0	0			0	0	0	
Initial Fut:	0	0	0	340	757	891				0	1879	32			83	299	0	
User Adj:	1.00	1.00	1.00	1.00	1.00	0.00				1.00	1.00	1.00			1.00	1.00	1.00	
PHF Adj:	1.00	1.00	1.00	1.00	1.00	0.00				1.00	1.00	1.00			1.00	1.00	1.00	
PHF Volume:	0	0	0	340	757	0				0	1879	32			83	299	0	
Reduct Vol:	0	0	0	0	0	0				0	0	0			0	0	0	
Reduced Vol:	0	0	0	340	757	0				0	1879	32			83	299	0	
PCE Adj:	1.00	1.00	1.00	1.00	1.00	0.00				1.00	1.00	1.00			1.00	1.00	1.00	
MLF Adj:	1.00	1.00	1.00	1.00	1.00	0.00				1.00	1.00	1.00			1.00	1.00	1.00	
FinalVolume:	0	0	0	340	757	0				0	1879	32			83	299	0	
Saturation Flow Module:																		
Sat/Lane:	1600	1600	1600	1600	1600	1600				1600	1600	1600			1600	1600	1600	
Adjustment:	1.00	1.00	1.00	1.00	1.00	1.00				1.00	1.00	1.00			1.00	1.00	1.00	
Lanes:	0.00	0.00	0.00	1.24	2.76	1.00				0.00	2.95	0.05			1.00	1.00	0.00	
Final Sat.:	0	0	0	1983	4417	1600				0	4719	81			1600	1600	0	
Capacity Analysis Module:																		
Vol/Sat:	0.00	0.00	0.00	0.17	0.17	0.00				0.00	0.40	0.40			0.05	0.19	0.00	
Crit Moves:				****							****				****			

Newport Banning Ranch
Year 2016 Cumulative Conditions without Project
AM Peak Hour

Level Of Service Computation Report
ICU 1(Loss as Cycle Length %) Method (Future Volume Alternative)

Intersection #26 Newport Blvd /Victoria St (22nd St) [Ramp]

Cycle (sec):	120	Critical Vol./Cap.(X):	1.104
Loss Time (sec):	0 (Y+R=4.0 sec)	Average Delay (sec/veh):	xxxxxx
Optimal Cycle:	180	Level Of Service:	F

Street Name:	Newport Boulevard									Victoria Street (22nd Street)								
Approach:	North Bound			South Bound			East Bound			West Bound		
Movement:	L - T - R			L - T - R			L - T - R			L - T - R		
Control:	Permitted			Permitted			Protected			Protected		
Rights:	Include			Include			Include			Include		
Min. Green:	0	0	0	0	0	0	0	0	0	0	0	0
Lanes:	0 1	2 0	1	0 0	0 0	0	2 0	2 0	0	0 0	1 0	1
Volume Module:												
Base Vol:	87	1212	32	0	0	0	1587	316	0	0	266	316
Growth Adj:	1.07	1.07	1.07	1.07	1.07	1.07	1.07	1.07	1.07	1.07	1.07	1.07
Initial Bse:	93	1299	34	0	0	0	1701	339	0	0	285	339
Added Vol:	0	0	0	0	0	0	133	14	0	0	0	47
Committed P:	0	0	0	0	0	0	0	0	0	0	0	0
Initial Fut:	93	1299	34	0	0	0	1834	353	0	0	285	386
User Adj:	1.00	1.00	1.00	1.00	1.00	1.00	1.00	1.00	1.00	1.00	1.00	1.00
PHF Adj:	1.00	1.00	1.00	1.00	1.00	1.00	1.00	1.00	1.00	1.00	1.00	1.00
PHF Volume:	93	1299	34	0	0	0	1834	353	0	0	285	386
Reduct Vol:	0	0	0	0	0	0	0	0	0	0	0	0
Reduced Vol:	93	1299	34	0	0	0	1834	353	0	0	285	386
PCE Adj:	1.00	1.00	1.00	1.00	1.00	1.00	1.00	1.00	1.00	1.00	1.00	1.00
MLF Adj:	1.00	1.00	1.00	1.00	1.00	1.00	1.00	1.00	1.00	1.00	1.00	1.00
FinalVolume:	93	1299	34	0	0	0	1834	353	0	0	285	386
Saturation Flow Module:												
Sat/Lane:	1600	1600	1600	1600	1600	1600	1600	1600	1600	1600	1600	1600
Adjustment:	1.00	1.00	1.00	1.00	1.00	1.00	1.00	1.00	1.00	1.00	1.00	1.00
Lanes:	0.20	2.80	1.00	0.00	0.00	0.00	2.00	2.00	0.00	0.00	1.00	1.00
Final Sat.:	321	4479	1600	0	0	0	3200	3200	0	0	1600	1600
Capacity Analysis Module:												
Vol/Sat:	0.06	0.29	0.02	0.00	0.00	0.00	0.57	0.11	0.00	0.00	0.18	0.24
Crit Moves:		****					****					****

Newport Banning Ranch
Year 2016 Cumulative Conditions without Project
AM Peak Hour

Level Of Service Computation Report
2000 HCM 4-Way Stop Method (Future Volume Alternative)

Intersection #27 Whittier Ave/19th St

Cycle (sec):	100	Critical Vol./Cap.(X):	0.378
Loss Time (sec):	0 (Y+R=4.0 sec)	Average Delay (sec/veh):	10.3
Optimal Cycle:	0	Level Of Service:	B

Street Name:	Whittier Avenue						19th St					
Approach:	North Bound			South Bound			East Bound			West Bound		
Movement:	L -	T -	R	L -	T -	R	L -	T -	R	L -	T -	R
Control:	Stop Sign			Stop Sign			Stop Sign			Stop Sign		
Rights:	Include			Include			Include			Include		
Min. Green:	0	0	0	0	0	0	0	0	0	0	0	0
Lanes:	0 0	1! 0	0	0 1	0 0	0	1 0	0 1	0	1 0	0 1	0
Volume Module:												
Base Vol:	5	6	258	10	6	0	1	123	7	210	29	10
Growth Adj:	1.07	1.07	1.07	1.07	1.07	1.07	1.07	1.07	1.07	1.07	1.07	1.07
Initial Bse:	5	6	277	11	6	0	1	132	8	225	31	11
Added Vol:	0	0	0	0	0	0	0	0	0	0	0	0
Committed P:	0	0	0	0	0	0	0	0	0	0	0	0
Initial Fut:	5	6	277	11	6	0	1	132	8	225	31	11
User Adj:	1.00	1.00	1.00	1.00	1.00	1.00	1.00	1.00	1.00	1.00	1.00	1.00
PHF Adj:	1.00	1.00	1.00	1.00	1.00	1.00	1.00	1.00	1.00	1.00	1.00	1.00
PHF Volume:	5	6	277	11	6	0	1	132	8	225	31	11
Reduct Vol:	0	0	0	0	0	0	0	0	0	0	0	0
Reduced Vol:	5	6	277	11	6	0	1	132	8	225	31	11
PCE Adj:	1.00	1.00	1.00	1.00	1.00	1.00	1.00	1.00	1.00	1.00	1.00	1.00
MLF Adj:	1.00	1.00	1.00	1.00	1.00	1.00	1.00	1.00	1.00	1.00	1.00	1.00
FinalVolume:	5	6	277	11	6	0	1	132	8	225	31	11
Saturation Flow Module:												
Adjustment:	1.00	1.00	1.00	1.00	1.00	1.00	1.00	1.00	1.00	1.00	1.00	1.00
Lanes:	0.02	0.02	0.96	0.62	0.38	0.00	1.00	0.95	0.05	1.00	0.74	0.26
Final Sat.:	14	17	740	376	225	0	572	593	34	595	497	172
Capacity Analysis Module:												
Vol/Sat:	0.37	0.37	0.37	0.03	0.03	xxxx	0.00	0.22	0.22	0.38	0.06	0.06
Crit Moves:	****				****			****		****		
Delay/Veh:	9.9	9.9	9.9	8.6	8.6	0.0	8.7	9.6	9.6	11.9	8.2	8.2
Delay Adj:	1.00	1.00	1.00	1.00	1.00	1.00	1.00	1.00	1.00	1.00	1.00	1.00
AdjDel/Veh:	9.9	9.9	9.9	8.6	8.6	0.0	8.7	9.6	9.6	11.9	8.2	8.2
LOS by Move:	A	A	A	A	A	*	A	A	A	B	A	A
ApproachDel:	9.9			8.6			9.6			11.3		
Delay Adj:	1.00			1.00			1.00			1.00		
ApprAdjDel:	9.9			8.6			9.6			11.3		
LOS by Appr:	A			A			A			B		
AllWayAvgQ:	0.5	0.5	0.5	0.0	0.0	0.0	0.0	0.3	0.3	0.6	0.1	0.1

Newport Banning Ranch
Year 2016 Cumulative Conditions without Project
AM Peak Hour

Note: Queue reported is the number of cars per lane.

Newport Banning Ranch
Year 2016 Cumulative Conditions without Project
AM Peak Hour

Level Of Service Computation Report
2000 HCM 4-Way Stop Method (Future Volume Alternative)

Intersection #28 Monrovia Ave/19th St

Cycle (sec):	100	Critical Vol./Cap.(X):	0.845
Loss Time (sec):	0 (Y+R=4.0 sec)	Average Delay (sec/veh):	21.1
Optimal Cycle:	0	Level Of Service:	C

Street Name:	Monrovia Avenue						19th Street					
Approach:	North Bound			South Bound			East Bound			West Bound		
Movement:	L -	T -	R	L -	T -	R	L -	T -	R	L -	T -	R
Control:	Stop Sign			Stop Sign			Stop Sign			Stop Sign		
Rights:	Include			Include			Include			Include		
Min. Green:	0	0	0	0	0	0	0	0	0	0	0	0
Lanes:	0 1	0 0	1	0 0	1!	0 0	1 0	1 0	1	1 0	1 0	1
Volume Module:												
Base Vol:	31	10	162	79	19	1	4	403	34	154	213	30
Growth Adj:	1.07	1.07	1.07	1.07	1.07	1.07	1.07	1.07	1.07	1.07	1.07	1.07
Initial Bse:	33	11	174	85	20	1	4	432	36	165	228	32
Added Vol:	0	11	9	0	15	0	0	0	0	10	0	0
Committed P:	0	0	0	0	0	0	0	0	0	0	0	0
Initial Fut:	33	22	183	85	35	1	4	432	36	175	228	32
User Adj:	1.00	1.00	1.00	1.00	1.00	1.00	1.00	1.00	1.00	1.00	1.00	1.00
PHF Adj:	1.00	1.00	1.00	1.00	1.00	1.00	1.00	1.00	1.00	1.00	1.00	1.00
PHF Volume:	33	22	183	85	35	1	4	432	36	175	228	32
Reduct Vol:	0	0	0	0	0	0	0	0	0	0	0	0
Reduced Vol:	33	22	183	85	35	1	4	432	36	175	228	32
PCE Adj:	1.00	1.00	1.00	1.00	1.00	1.00	1.00	1.00	1.00	1.00	1.00	1.00
MLF Adj:	1.00	1.00	1.00	1.00	1.00	1.00	1.00	1.00	1.00	1.00	1.00	1.00
FinalVolume:	33	22	183	85	35	1	4	432	36	175	228	32
Saturation Flow Module:												
Adjustment:	1.00	1.00	1.00	1.00	1.00	1.00	1.00	1.00	1.00	1.00	1.00	1.00
Lanes:	0.60	0.40	1.00	0.70	0.29	0.01	1.00	1.00	1.00	1.00	1.00	1.00
Final Sat.:	269	176	509	302	126	4	468	511	556	458	490	534
Capacity Analysis Module:												
Vol/Sat:	0.12	0.12	0.36	0.28	0.28	0.28	0.01	0.84	0.07	0.38	0.47	0.06
Crit Moves:			****			****		****			****	
Delay/Veh:	11.3	11.3	12.6	13.4	13.4	13.4	10.2	35.6	9.4	14.7	15.5	9.5
Delay Adj:	1.00	1.00	1.00	1.00	1.00	1.00	1.00	1.00	1.00	1.00	1.00	1.00
AdjDel/Veh:	11.3	11.3	12.6	13.4	13.4	13.4	10.2	35.6	9.4	14.7	15.5	9.5
LOS by Move:	B	B	B	B	B	B	B	E	A	B	C	A
ApproachDel:	12.3			13.4			33.3			14.7		
Delay Adj:	1.00			1.00			1.00			1.00		
ApprAdjDel:	12.3			13.4			33.3			14.7		
LOS by Appr:	B			B			D			B		
AllWayAvgQ:	0.1	0.1	0.5	0.3	0.3	0.3	0.0	3.7	0.1	0.6	0.8	0.1

Newport Banning Ranch
Year 2016 Cumulative Conditions without Project
AM Peak Hour

Note: Queue reported is the number of cars per lane.

Newport Banning Ranch
Year 2016 Cumulative Conditions without Project
AM Peak Hour

Level Of Service Computation Report
ICU 1(Loss as Cycle Length %) Method (Future Volume Alternative)

Intersection #29 Placentia Ave/19th St

Cycle (sec):	100	Critical Vol./Cap.(X):	0.538
Loss Time (sec):	0 (Y+R=4.0 sec)	Average Delay (sec/veh):	xxxxxx
Optimal Cycle:	49	Level Of Service:	A

Street Name:	Placentia Avenue						19th Street					
Approach:	North Bound			South Bound			East Bound			West Bound		
Movement:	L - T - R			L - T - R			L - T - R			L - T - R		
Control:	Protected			Protected			Protected			Protected		
Rights:	Include			Include			Include			Include		
Min. Green:	0	0	0	0	0	0	0	0	0	0	0	0
Lanes:	1 0 2	0 1		1 0 1	1 0		2 0 1	1 0		2 0 2	0 1	
Volume Module:												
Base Vol:	31	412	217	140	495	115	201	582	33	219	328	165
Growth Adj:	1.07	1.07	1.07	1.07	1.07	1.07	1.07	1.07	1.07	1.07	1.07	1.07
Initial Bse:	33	442	233	150	531	123	215	624	35	235	352	177
Added Vol:	0	57	6	8	110	0	0	9	0	2	10	0
Committed P:	0	1	0	0	0	0	0	0	0	0	0	0
Initial Fut:	33	500	239	158	641	123	215	633	35	237	362	177
User Adj:	1.00	1.00	1.00	1.00	1.00	1.00	1.00	1.00	1.00	1.00	1.00	1.00
PHF Adj:	1.00	1.00	1.00	1.00	1.00	1.00	1.00	1.00	1.00	1.00	1.00	1.00
PHF Volume:	33	500	239	158	641	123	215	633	35	237	362	177
Reduct Vol:	0	0	0	0	0	0	0	0	0	0	0	0
Reduced Vol:	33	500	239	158	641	123	215	633	35	237	362	177
PCE Adj:	1.00	1.00	1.00	1.00	1.00	1.00	1.00	1.00	1.00	1.00	1.00	1.00
MLF Adj:	1.00	1.00	1.00	1.00	1.00	1.00	1.00	1.00	1.00	1.00	1.00	1.00
FinalVolume:	33	500	239	158	641	123	215	633	35	237	362	177
Saturation Flow Module:												
Sat/Lane:	1600	1600	1600	1600	1600	1600	1600	1600	1600	1600	1600	1600
Adjustment:	1.00	1.00	1.00	1.00	1.00	1.00	1.00	1.00	1.00	1.00	1.00	1.00
Lanes:	1.00	2.00	1.00	1.00	1.68	0.32	2.00	1.89	0.11	2.00	2.00	1.00
Final Sat.:	1600	3200	1600	1600	2684	516	3200	3031	169	3200	3200	1600
Capacity Analysis Module:												
Vol/Sat:	0.02	0.16	0.15	0.10	0.24	0.24	0.07	0.21	0.21	0.07	0.11	0.11
Crit Moves:		****		****				****		****		

Newport Banning Ranch
Year 2016 Cumulative Conditions without Project
AM Peak Hour

Level Of Service Computation Report
ICU 1(Loss as Cycle Length %) Method (Future Volume Alternative)

Intersection #30 Pomona Ave/19th St

Cycle (sec):	100	Critical Vol./Cap.(X):	0.510
Loss Time (sec):	0 (Y+R=4.0 sec)	Average Delay (sec/veh):	xxxxxx
Optimal Cycle:	47	Level Of Service:	A

Street Name:	Pomona Avenue						19th Street					
Approach:	North Bound			South Bound			East Bound			West Bound		
Movement:	L - T - R			L - T - R			L - T - R			L - T - R		
Control:	Protected			Protected			Prot+Permit			Prot+Permit		
Rights:	Include			Include			Include			Include		
Min. Green:	0	0	0	0	0	0	0	0	0	0	0	0
Lanes:	1 0 0 1 0			1 0 0 1 0			1 0 1 1 0			1 0 1 1 0		
Volume Module:												
Base Vol:	36	75	71	52	94	36	38	847	39	104	615	26
Growth Adj:	1.07	1.07	1.07	1.07	1.07	1.07	1.07	1.07	1.07	1.07	1.07	1.07
Initial Bse:	39	80	76	56	101	39	41	908	42	111	659	28
Added Vol:	0	3	3	0	0	0	0	23	0	0	12	1
Committed P:	0	0	0	0	0	0	0	0	0	0	0	0
Initial Fut:	39	83	79	56	101	39	41	931	42	111	671	29
User Adj:	1.00	1.00	1.00	1.00	1.00	1.00	1.00	1.00	1.00	1.00	1.00	1.00
PHF Adj:	1.00	1.00	1.00	1.00	1.00	1.00	1.00	1.00	1.00	1.00	1.00	1.00
PHF Volume:	39	83	79	56	101	39	41	931	42	111	671	29
Reduct Vol:	0	0	0	0	0	0	0	0	0	0	0	0
Reduced Vol:	39	83	79	56	101	39	41	931	42	111	671	29
PCE Adj:	1.00	1.00	1.00	1.00	1.00	1.00	1.00	1.00	1.00	1.00	1.00	1.00
MLF Adj:	1.00	1.00	1.00	1.00	1.00	1.00	1.00	1.00	1.00	1.00	1.00	1.00
FinalVolume:	39	83	79	56	101	39	41	931	42	111	671	29
Saturation Flow Module:												
Sat/Lane:	1600	1600	1600	1600	1600	1600	1600	1600	1600	1600	1600	1600
Adjustment:	1.00	1.00	1.00	1.00	1.00	1.00	1.00	1.00	1.00	1.00	1.00	1.00
Lanes:	1.00	0.51	0.49	1.00	0.72	0.28	1.00	1.91	0.09	1.00	1.92	0.08
Final Sat.:	1600	821	779	1600	1157	443	1600	3062	138	1600	3068	132
Capacity Analysis Module:												
Vol/Sat:	0.02	0.10	0.10	0.03	0.09	0.09	0.03	0.30	0.30	0.07	0.22	0.22
Crit Moves:		****		****				****		****		

Newport Banning Ranch
Year 2016 Cumulative Conditions without Project
AM Peak Hour

Level Of Service Computation Report
ICU 1(Loss as Cycle Length %) Method (Future Volume Alternative)

Intersection #31 Anaheim Ave/19th St

Cycle (sec):	100	Critical Vol./Cap.(X):	0.511
Loss Time (sec):	0 (Y+R=4.0 sec)	Average Delay (sec/veh):	xxxxxx
Optimal Cycle:	38	Level Of Service:	A

Street Name:	Anaheim Avenue						19th Street					
Approach:	North Bound			South Bound			East Bound			West Bound		
Movement:	L - T - R			L - T - R			L - T - R			L - T - R		
Control:	Permitted			Permitted			Prot+Permit			Prot+Permit		
Rights:	Include			Include			Include			Include		
Min. Green:	0	0	0	0	0	0	0	0	0	0	0	0
Lanes:	1 0 0	1 0		0 1 0	1 0		0 1 0	1 1 0		1 0 2	0 1	
Volume Module:												
Base Vol:	27	26	88	41	41	23	24	961	18	103	724	33
Growth Adj:	1.07	1.07	1.07	1.07	1.07	1.07	1.07	1.07	1.07	1.07	1.07	1.07
Initial Bse:	29	28	94	44	44	25	26	1030	19	110	776	35
Added Vol:	0	0	0	0	0	0	0	31	0	0	13	0
Committed P:	0	0	0	0	0	0	0	0	0	0	0	0
Initial Fut:	29	28	94	44	44	25	26	1061	19	110	789	35
User Adj:	1.00	1.00	1.00	1.00	1.00	1.00	1.00	1.00	1.00	1.00	1.00	1.00
PHF Adj:	1.00	1.00	1.00	1.00	1.00	1.00	1.00	1.00	1.00	1.00	1.00	1.00
PHF Volume:	29	28	94	44	44	25	26	1061	19	110	789	35
Reduct Vol:	0	0	0	0	0	0	0	0	0	0	0	0
Reduced Vol:	29	28	94	44	44	25	26	1061	19	110	789	35
PCE Adj:	1.00	1.00	1.00	1.00	1.00	1.00	1.00	1.00	1.00	1.00	1.00	1.00
MLF Adj:	1.00	1.00	1.00	1.00	1.00	1.00	1.00	1.00	1.00	1.00	1.00	1.00
FinalVolume:	29	28	94	44	44	25	26	1061	19	110	789	35
Saturation Flow Module:												
Sat/Lane:	1600	1600	1600	1600	1600	1600	1600	1600	1600	1600	1600	1600
Adjustment:	1.00	1.00	1.00	1.00	1.00	1.00	1.00	1.00	1.00	1.00	1.00	1.00
Lanes:	1.00	0.23	0.77	1.00	0.64	0.36	1.00	1.96	0.04	1.00	2.00	1.00
Final Sat.:	1600	365	1235	1600	1025	575	1600	3143	57	1600	3200	1600
Capacity Analysis Module:												
Vol/Sat:	0.02	0.08	0.08	0.03	0.04	0.04	0.02	0.34	0.34	0.07	0.25	0.02
Crit Moves:		****		****				****		****		

Newport Banning Ranch
Year 2016 Cumulative Conditions without Project
AM Peak Hour

Level Of Service Computation Report
ICU 1(Loss as Cycle Length %) Method (Future Volume Alternative)

Intersection #32 Park Ave/19th St

Cycle (sec):	100	Critical Vol./Cap.(X):	0.484
Loss Time (sec):	0 (Y+R=4.0 sec)	Average Delay (sec/veh):	xxxxxx
Optimal Cycle:	36	Level Of Service:	A

Street Name:	Park Avenue						19th St					
Approach:	North Bound			South Bound			East Bound			West Bound		
Movement:	L - T - R			L - T - R			L - T - R			L - T - R		
Control:	Permitted			Permitted			Prot+Permit			Prot+Permit		
Rights:	Include			Include			Include			Include		
Min. Green:	0	0	0	0	0	0	0	0	0	0	0	0
Lanes:	2 0 0 0 1			0 0 0 0 0			1 0 2 0 1			1 0 3 0 0		
Volume Module:												
Base Vol:	43	0	108	0	0	0	6	1012	60	94	800	0
Growth Adj:	1.07	1.07	1.07	1.07	1.07	1.07	1.07	1.07	1.07	1.07	1.07	1.07
Initial Bse:	46	0	116	0	0	0	6	1085	64	101	858	0
Added Vol:	0	0	0	0	0	0	0	31	0	0	13	0
Committed P:	0	0	0	0	0	0	0	0	0	0	0	0
Initial Fut:	46	0	116	0	0	0	6	1116	64	101	871	0
User Adj:	1.00	1.00	1.00	1.00	1.00	1.00	1.00	1.00	1.00	1.00	1.00	1.00
PHF Adj:	1.00	1.00	1.00	1.00	1.00	1.00	1.00	1.00	1.00	1.00	1.00	1.00
PHF Volume:	46	0	116	0	0	0	6	1116	64	101	871	0
Reduct Vol:	0	0	0	0	0	0	0	0	0	0	0	0
Reduced Vol:	46	0	116	0	0	0	6	1116	64	101	871	0
PCE Adj:	1.00	1.00	1.00	1.00	1.00	1.00	1.00	1.00	1.00	1.00	1.00	1.00
MLF Adj:	1.00	1.00	1.00	1.00	1.00	1.00	1.00	1.00	1.00	1.00	1.00	1.00
FinalVolume:	46	0	116	0	0	0	6	1116	64	101	871	0
Saturation Flow Module:												
Sat/Lane:	1600	1600	1600	1600	1600	1600	1600	1600	1600	1600	1600	1600
Adjustment:	1.00	1.00	1.00	1.00	1.00	1.00	1.00	1.00	1.00	1.00	1.00	1.00
Lanes:	2.00	0.00	1.00	0.00	0.00	0.00	1.00	2.00	1.00	1.00	3.00	0.00
Final Sat.:	3200	0	1600	0	0	0	1600	3200	1600	1600	4800	0
Capacity Analysis Module:												
Vol/Sat:	0.01	0.00	0.07	0.00	0.00	0.00	0.00	0.35	0.04	0.06	0.18	0.00
Crit Moves:			****					****		****		

Newport Banning Ranch
Year 2016 Cumulative Conditions without Project
AM Peak Hour

Level Of Service Computation Report
ICU 1(Loss as Cycle Length %) Method (Future Volume Alternative)

Intersection #33 Harbor Blvd/19th St

Cycle (sec):	100	Critical Vol./Cap.(X):	0.438
Loss Time (sec):	0 (Y+R=4.0 sec)	Average Delay (sec/veh):	xxxxxx
Optimal Cycle:	41	Level Of Service:	A

Street Name:	Harbor Boulevard						19th Street					
Approach:	North Bound			South Bound			East Bound			West Bound		
Movement:	L - T - R			L - T - R			L - T - R			L - T - R		
Control:	Protected			Protected			Protected			Protected		
Rights:	Include			Include			Include			Include		
Min. Green:	0	0	0	0	0	0	0	0	0	0	0	0
Lanes:	1 0 2	1 0		1 0 2	0 1		2 0 2	1 0		1 0 3	0 1	
Volume Module:												
Base Vol:	18	287	14	141	425	260	216	928	37	36	630	161
Growth Adj:	1.07	1.07	1.07	1.07	1.07	1.07	1.07	1.07	1.07	1.07	1.07	1.07
Initial Bse:	19	308	15	151	456	279	232	995	40	39	675	173
Added Vol:	1	4	0	5	14	11	19	2	10	0	0	1
Committed P:	3	5	0	0	6	0	0	0	2	0	0	0
Initial Fut:	23	317	15	156	476	290	251	997	52	39	675	174
User Adj:	1.00	1.00	1.00	1.00	1.00	1.00	1.00	1.00	1.00	1.00	1.00	1.00
PHF Adj:	1.00	1.00	1.00	1.00	1.00	1.00	1.00	1.00	1.00	1.00	1.00	1.00
PHF Volume:	23	317	15	156	476	290	251	997	52	39	675	174
Reduct Vol:	0	0	0	0	0	0	0	0	0	0	0	0
Reduced Vol:	23	317	15	156	476	290	251	997	52	39	675	174
PCE Adj:	1.00	1.00	1.00	1.00	1.00	1.00	1.00	1.00	1.00	1.00	1.00	1.00
MLF Adj:	1.00	1.00	1.00	1.00	1.00	1.00	1.00	1.00	1.00	1.00	1.00	1.00
FinalVolume:	23	317	15	156	476	290	251	997	52	39	675	174
Saturation Flow Module:												
Sat/Lane:	1600	1600	1600	1600	1600	1600	1600	1600	1600	1600	1600	1600
Adjustment:	1.00	1.00	1.00	1.00	1.00	1.00	1.00	1.00	1.00	1.00	1.00	1.00
Lanes:	1.00	2.86	0.14	1.00	2.00	1.00	2.00	2.85	0.15	1.00	3.00	1.00
Final Sat.:	1600	4583	217	1600	3200	1600	3200	4563	237	1600	4800	1600
Capacity Analysis Module:												
Vol/Sat:	0.01	0.07	0.07	0.10	0.15	0.18	0.08	0.22	0.22	0.02	0.14	0.11
Crit Moves:	****					****		****		****		

Newport Banning Ranch
Year 2016 Cumulative Conditions without Project
AM Peak Hour

Level Of Service Computation Report
ICU 1(Loss as Cycle Length %) Method (Future Volume Alternative)

Intersection #34 Newport Blvd/19th St

Cycle (sec):	120	Critical Vol./Cap.(X):	0.859
Loss Time (sec):	0 (Y+R=4.0 sec)	Average Delay (sec/veh):	xxxxxx
Optimal Cycle:	161	Level Of Service:	D

Street Name:	Newport Boulevard									19th Street								
Approach:	North Bound			South Bound			East Bound			West Bound		
Movement:	L	- T	- R	L	- T	- R	L	- T	- R	L	- T	- R
Control:	Protected			Protected			Split Phase			Split Phase		
Rights:	Include			Include			Include			Include		
Min. Green:	0	0	0	0	0	0	0	0	0	0	0	0
Lanes:	1 0	3 1	0	1 0	3 1	1	2 1	1 0	1	1 0	2 1	1
Volume Module:												
Base Vol:	31	2709	9	181	2440	486	886	183	14	21	162	237
Growth Adj:	1.07	1.07	1.07	1.07	1.07	1.07	1.07	1.07	1.07	1.07	1.07	1.07
Initial Bse:	33	2904	10	194	2616	521	950	196	15	23	174	254
Added Vol:	0	15	0	0	18	0	2	6	0	10	1	0
Committed P:	0	12	1	0	9	0	0	0	2	0	0	0
Initial Fut:	33	2931	11	194	2643	521	952	202	17	33	175	254
User Adj:	1.00	1.00	1.00	1.00	1.00	1.00	1.00	1.00	1.00	1.00	1.00	1.00
PHF Adj:	1.00	1.00	1.00	1.00	1.00	1.00	1.00	1.00	1.00	1.00	1.00	1.00
PHF Volume:	33	2931	11	194	2643	521	952	202	17	33	175	254
Reduct Vol:	0	0	0	0	0	0	0	0	0	0	0	0
Reduced Vol:	33	2931	11	194	2643	521	952	202	17	33	175	254
PCE Adj:	1.00	1.00	1.00	1.00	1.00	1.00	1.00	1.00	1.00	1.00	1.00	1.00
MLF Adj:	1.00	1.00	1.00	1.00	1.00	1.00	1.00	1.00	1.00	1.00	1.00	1.00
FinalVolume:	33	2931	11	194	2643	521	952	202	17	33	175	254
Saturation Flow Module:												
Sat/Lane:	1600	1600	1600	1600	1600	1600	1600	1600	1600	1600	1600	1600
Adjustment:	1.00	1.00	1.00	1.00	1.00	1.00	1.00	1.00	1.00	1.00	1.00	1.00
Lanes:	1.00	3.99	0.01	1.00	4.00	1.00	3.00	1.00	1.00	1.00	2.00	2.00
Final Sat.:	1600	6377	23	1600	6400	1600	4800	1600	1600	1600	3200	3200
Capacity Analysis Module:												
Vol/Sat:	0.02	0.46	0.46	0.12	0.41	0.33	0.20	0.13	0.01	0.02	0.05	0.08
Crit Moves:		****		****			****					****

Newport Banning Ranch
Year 2016 Cumulative Conditions without Project
AM Peak Hour

Level Of Service Computation Report
ICU 1(Loss as Cycle Length %) Method (Future Volume Alternative)

Intersection #35 Newport Blvd/Broadway

Cycle (sec):	120	Critical Vol./Cap.(X):	0.626
Loss Time (sec):	0 (Y+R=4.0 sec)	Average Delay (sec/veh):	xxxxxx
Optimal Cycle:	50	Level Of Service:	B

Street Name:	Newport Boulevard									Broadway								
Approach:	North Bound			South Bound			East Bound			West Bound		
Movement:	L	- T	- R	L	- T	- R	L	- T	- R	L	- T	- R
Control:	Protected			Protected			Permitted			Permitted		
Rights:	Include			Include			Include			Include		
Min. Green:	0	0	0	0	0	0	0	0	0	0	0	0
Lanes:	1 0	3 1	0	1 0	3 0	1	0 1	0 0	1	1 0	0 1	0
Volume Module:												
Base Vol:	4	2678	8	60	2396	7	6	9	3	38	12	102
Growth Adj:	1.07	1.07	1.07	1.07	1.07	1.07	1.07	1.07	1.07	1.07	1.07	1.07
Initial Bse:	4	2871	9	64	2569	8	6	10	3	41	13	109
Added Vol:	2	15	0	0	18	10	0	0	2	0	0	0
Committed P:	0	14	1	0	12	0	0	0	0	0	0	0
Initial Fut:	6	2900	10	64	2599	18	6	10	5	41	13	109
User Adj:	1.00	1.00	1.00	1.00	1.00	1.00	1.00	1.00	1.00	1.00	1.00	1.00
PHF Adj:	1.00	1.00	1.00	1.00	1.00	1.00	1.00	1.00	1.00	1.00	1.00	1.00
PHF Volume:	6	2900	10	64	2599	18	6	10	5	41	13	109
Reduct Vol:	0	0	0	0	0	0	0	0	0	0	0	0
Reduced Vol:	6	2900	10	64	2599	18	6	10	5	41	13	109
PCE Adj:	1.00	1.00	1.00	1.00	1.00	1.00	1.00	1.00	1.00	1.00	1.00	1.00
MLF Adj:	1.00	1.00	1.00	1.00	1.00	1.00	1.00	1.00	1.00	1.00	1.00	1.00
FinalVolume:	6	2900	10	64	2599	18	6	10	5	41	13	109
Saturation Flow Module:												
Sat/Lane:	1600	1600	1600	1600	1600	1600	1600	1600	1600	1600	1600	1600
Adjustment:	1.00	1.00	1.00	1.00	1.00	1.00	1.00	1.00	1.00	1.00	1.00	1.00
Lanes:	1.00	3.99	0.01	1.00	3.00	1.00	0.40	0.60	1.00	1.00	0.11	0.89
Final Sat.:	1600	6379	21	1600	4800	1600	640	960	1600	1600	168	1432
Capacity Analysis Module:												
Vol/Sat:	0.00	0.45	0.45	0.04	0.54	0.01	0.00	0.01	0.00	0.03	0.08	0.08
Crit Moves:	****				****		****				****	

Newport Banning Ranch
Year 2016 Cumulative Conditions without Project
AM Peak Hour

Level Of Service Computation Report
ICU 1(Loss as Cycle Length %) Method (Future Volume Alternative)

Intersection #36 Newport Blvd/Harbor Blvd

Cycle (sec):	120	Critical Vol./Cap.(X):	0.758
Loss Time (sec):	0 (Y+R=4.0 sec)	Average Delay (sec/veh):	xxxxxx
Optimal Cycle:	94	Level Of Service:	C

Street Name:	Newport Boulevard						Harbor Boulevard					
Approach:	North Bound			South Bound			East Bound			West Bound		
Movement:	L - T - R			L - T - R			L - T - R			L - T - R		
Control:	Protected			Protected			Protected			Protected		
Rights:	Include			Include			Ovl			Include		
Min. Green:	0	0	0	0	0	0	0	0	0	0	0	0
Lanes:	2 0 4 0 0			0 0 2 1 0			1 0 0 0 2			0 0 0 0 0		
Volume Module:												
Base Vol:	317	2653	0	0	2559	49	26	0	486	0	0	0
Growth Adj:	1.07	1.07	1.07	1.07	1.07	1.07	1.07	1.07	1.07	1.07	1.07	1.07
Initial Bse:	340	2844	0	0	2743	53	28	0	521	0	0	0
Added Vol:	3	17	0	0	19	0	0	0	5	0	0	0
Committed P:	13	17	0	0	14	0	0	0	14	0	0	0
Initial Fut:	356	2878	0	0	2776	53	28	0	540	0	0	0
User Adj:	1.00	1.00	1.00	1.00	1.00	1.00	1.00	1.00	1.00	1.00	1.00	1.00
PHF Adj:	1.00	1.00	1.00	1.00	1.00	1.00	1.00	1.00	1.00	1.00	1.00	1.00
PHF Volume:	356	2878	0	0	2776	53	28	0	540	0	0	0
Reduct Vol:	0	0	0	0	0	0	0	0	0	0	0	0
Reduced Vol:	356	2878	0	0	2776	53	28	0	540	0	0	0
PCE Adj:	1.00	1.00	1.00	1.00	1.00	1.00	1.00	1.00	1.00	1.00	1.00	1.00
MLF Adj:	1.00	1.00	1.00	1.00	1.00	1.00	1.00	1.00	1.00	1.00	1.00	1.00
FinalVolume:	356	2878	0	0	2776	53	28	0	540	0	0	0
OvlAdjVol:									184			
Saturation Flow Module:												
Sat/Lane:	1600	1600	1600	1600	1600	1600	1600	1600	1600	1600	1600	1600
Adjustment:	1.00	1.00	1.00	1.00	1.00	1.00	1.00	1.00	1.00	1.00	1.00	1.00
Lanes:	2.00	4.00	0.00	0.00	2.94	0.06	1.00	0.00	2.00	0.00	0.00	0.00
Final Sat.:	3200	6400	0	0	4711	89	1600	0	3200	0	0	0
Capacity Analysis Module:												
Vol/Sat:	0.11	0.45	0.00	0.00	0.59	0.59	0.02	0.00	0.17	0.00	0.00	0.00
OvlAdjV/S:									0.06			
Crit Moves:	****				****				****			

Newport Banning Ranch
Year 2016 Cumulative Conditions without Project
AM Peak Hour

Level Of Service Computation Report
ICU 1(Loss as Cycle Length %) Method (Future Volume Alternative)

Intersection #37 Newport Blvd/18th St (Rochester St)

Cycle (sec):	120	Critical Vol./Cap.(X):	0.800
Loss Time (sec):	0 (Y+R=4.0 sec)	Average Delay (sec/veh):	xxxxxx
Optimal Cycle:	114	Level Of Service:	D

Street Name:	Newport Boulevard						18th Street (Rochester Street)					
Approach:	North Bound			South Bound			East Bound			West Bound		
Movement:	L - T - R			L - T - R			L - T - R			L - T - R		
Control:	Protected			Protected			Split Phase			Split Phase		
Rights:	Include			Include			Include			Include		
Min. Green:	0	0	0	0	0	0	0	0	0	0	0	0
Lanes:	1 0 3	1 0		1 0 3	0 1		2 0 1	0 1		1 0 0	1 0	
Volume Module:												
Base Vol:	64	2852	7	85	2743	165	179	81	26	7	68	30
Growth Adj:	1.07	1.07	1.07	1.07	1.07	1.07	1.07	1.07	1.07	1.07	1.07	1.07
Initial Bse:	69	3057	8	91	2940	177	192	87	28	8	73	32
Added Vol:	0	6	0	0	18	6	14	0	0	0	0	0
Committed P:	6	35	0	0	35	0	0	0	15	0	0	0
Initial Fut:	75	3098	8	91	2993	183	206	87	43	8	73	32
User Adj:	1.00	1.00	1.00	1.00	1.00	1.00	1.00	1.00	1.00	1.00	1.00	1.00
PHF Adj:	1.00	1.00	1.00	1.00	1.00	1.00	1.00	1.00	1.00	1.00	1.00	1.00
PHF Volume:	75	3098	8	91	2993	183	206	87	43	8	73	32
Reduct Vol:	0	0	0	0	0	0	0	0	0	0	0	0
Reduced Vol:	75	3098	8	91	2993	183	206	87	43	8	73	32
PCE Adj:	1.00	1.00	1.00	1.00	1.00	1.00	1.00	1.00	1.00	1.00	1.00	1.00
MLF Adj:	1.00	1.00	1.00	1.00	1.00	1.00	1.00	1.00	1.00	1.00	1.00	1.00
FinalVolume:	75	3098	8	91	2993	183	206	87	43	8	73	32
Saturation Flow Module:												
Sat/Lane:	1600	1600	1600	1600	1600	1600	1600	1600	1600	1600	1600	1600
Adjustment:	1.00	1.00	1.00	1.00	1.00	1.00	1.00	1.00	1.00	1.00	1.00	1.00
Lanes:	1.00	3.99	0.01	1.00	3.00	1.00	2.00	1.00	1.00	1.00	0.69	0.31
Final Sat.:	1600	6385	15	1600	4800	1600	3200	1600	1600	1600	1110	490
Capacity Analysis Module:												
Vol/Sat:	0.05	0.49	0.49	0.06	0.62	0.11	0.06	0.05	0.03	0.00	0.07	0.07
Crit Moves:	****				****		****				****	

Newport Banning Ranch
Year 2016 Cumulative Conditions without Project
AM Peak Hour

Level Of Service Computation Report
ICU 1(Loss as Cycle Length %) Method (Future Volume Alternative)

Intersection #38 Placentia Ave/18th St

Cycle (sec):	100	Critical Vol./Cap.(X):	0.515
Loss Time (sec):	0 (Y+R=4.0 sec)	Average Delay (sec/veh):	xxxxxx
Optimal Cycle:	38	Level Of Service:	A

Street Name:	Placentia Avenue						18th Street					
Approach:	North Bound			South Bound			East Bound			West Bound		
Movement:	L - T - R			L - T - R			L - T - R			L - T - R		
Control:	Protected			Protected			Permitted			Permitted		
Rights:	Include			Include			Include			Include		
Min. Green:	0	0	0	0	0	0	0	0	0	0	0	0
Lanes:	1 0	1 1	0	1 0	1 1	0	1 0	0 1	0	1 0	0 1	0
Volume Module:												
Base Vol:	25	488	23	38	725	106	46	120	27	41	173	45
Growth Adj:	1.07	1.07	1.07	1.07	1.07	1.07	1.07	1.07	1.07	1.07	1.07	1.07
Initial Bse:	27	523	25	41	777	114	49	129	29	44	185	48
Added Vol:	0	57	0	0	110	2	6	14	0	0	6	0
Committed P:	0	4	0	0	0	0	0	0	0	0	0	0
Initial Fut:	27	584	25	41	887	116	55	143	29	44	191	48
User Adj:	1.00	1.00	1.00	1.00	1.00	1.00	1.00	1.00	1.00	1.00	1.00	1.00
PHF Adj:	1.00	1.00	1.00	1.00	1.00	1.00	1.00	1.00	1.00	1.00	1.00	1.00
PHF Volume:	27	584	25	41	887	116	55	143	29	44	191	48
Reduct Vol:	0	0	0	0	0	0	0	0	0	0	0	0
Reduced Vol:	27	584	25	41	887	116	55	143	29	44	191	48
PCE Adj:	1.00	1.00	1.00	1.00	1.00	1.00	1.00	1.00	1.00	1.00	1.00	1.00
MLF Adj:	1.00	1.00	1.00	1.00	1.00	1.00	1.00	1.00	1.00	1.00	1.00	1.00
FinalVolume:	27	584	25	41	887	116	55	143	29	44	191	48
Saturation Flow Module:												
Sat/Lane:	1600	1600	1600	1600	1600	1600	1600	1600	1600	1600	1600	1600
Adjustment:	1.00	1.00	1.00	1.00	1.00	1.00	1.00	1.00	1.00	1.00	1.00	1.00
Lanes:	1.00	1.92	0.08	1.00	1.77	0.23	1.00	0.83	0.17	1.00	0.80	0.20
Final Sat.:	1600	3070	130	1600	2831	369	1600	1330	270	1600	1278	322
Capacity Analysis Module:												
Vol/Sat:	0.02	0.19	0.19	0.03	0.31	0.31	0.03	0.11	0.11	0.03	0.15	0.15
Crit Moves:	****				****		****				****	

Newport Banning Ranch
Year 2016 Cumulative Conditions without Project
AM Peak Hour

Level Of Service Computation Report
2000 HCM 4-Way Stop Method (Future Volume Alternative)

Intersection #39 Whittier Ave/17th St

Cycle (sec):	100	Critical Vol./Cap.(X):	0.118
Loss Time (sec):	0 (Y+R=4.0 sec)	Average Delay (sec/veh):	7.4
Optimal Cycle:	0	Level Of Service:	A

Street Name:	Whittier Avenue						17th St					
Approach:	North Bound			South Bound			East Bound			West Bound		
Movement:	L -	T -	R	L -	T -	R	L -	T -	R	L -	T -	R
Control:	Stop Sign			Stop Sign			Stop Sign			Stop Sign		
Rights:	Include			Include			Include			Include		
Min. Green:	0	0	0	0	0	0	0	0	0	0	0	0
Lanes:	0 0	0 1	0	0 0	1! 0	0	0 0	1! 0	0	0 0	1! 0	0
Volume Module:												
Base Vol:	0	35	2	24	23	53	56	2	5	1	0	24
Growth Adj:	1.07	1.07	1.07	1.07	1.07	1.07	1.07	1.07	1.07	1.07	1.07	1.07
Initial Bse:	0	38	2	26	25	57	60	2	5	1	0	26
Added Vol:	0	0	0	0	0	0	0	0	0	0	0	0
Committed P:	0	0	0	0	0	0	0	0	0	0	0	0
Initial Fut:	0	38	2	26	25	57	60	2	5	1	0	26
User Adj:	1.00	1.00	1.00	1.00	1.00	1.00	1.00	1.00	1.00	1.00	1.00	1.00
PHF Adj:	1.00	1.00	1.00	1.00	1.00	1.00	1.00	1.00	1.00	1.00	1.00	1.00
PHF Volume:	0	38	2	26	25	57	60	2	5	1	0	26
Reduct Vol:	0	0	0	0	0	0	0	0	0	0	0	0
Reduced Vol:	0	38	2	26	25	57	60	2	5	1	0	26
PCE Adj:	1.00	1.00	1.00	1.00	1.00	1.00	1.00	1.00	1.00	1.00	1.00	1.00
MLF Adj:	1.00	1.00	1.00	1.00	1.00	1.00	1.00	1.00	1.00	1.00	1.00	1.00
FinalVolume:	0	38	2	26	25	57	60	2	5	1	0	26
Saturation Flow Module:												
Adjustment:	1.00	1.00	1.00	1.00	1.00	1.00	1.00	1.00	1.00	1.00	1.00	1.00
Lanes:	0.00	0.95	0.05	0.24	0.23	0.53	0.89	0.03	0.08	0.04	0.00	0.96
Final Sat.:	0	797	46	218	209	482	714	25	64	37	0	898
Capacity Analysis Module:												
Vol/Sat:	xxxx	0.05	0.05	0.12	0.12	0.12	0.08	0.08	0.08	0.03	xxxx	0.03
Crit Moves:		****			****			****			****	
Delay/Veh:	0.0	7.4	7.4	7.4	7.4	7.4	7.7	7.7	7.7	6.8	0.0	6.8
Delay Adj:	1.00	1.00	1.00	1.00	1.00	1.00	1.00	1.00	1.00	1.00	1.00	1.00
AdjDel/Veh:	0.0	7.4	7.4	7.4	7.4	7.4	7.7	7.7	7.7	6.8	0.0	6.8
LOS by Move:	*	A	A	A	A	A	A	A	A	A	*	A
ApproachDel:		7.4			7.4			7.7			6.8	
Delay Adj:		1.00			1.00			1.00			1.00	
ApprAdjDel:		7.4			7.4			7.7			6.8	
LOS by Appr:		A			A			A			A	
AllWayAvgQ:	0.0	0.0	0.0	0.1	0.1	0.1	0.1	0.1	0.1	0.0	0.0	0.0

Newport Banning Ranch
Year 2016 Cumulative Conditions without Project
AM Peak Hour

Note: Queue reported is the number of cars per lane.

Newport Banning Ranch
Year 2016 Cumulative Conditions without Project
AM Peak Hour

Level Of Service Computation Report
2000 HCM 4-Way Stop Method (Future Volume Alternative)

Intersection #40 Monrovia Ave/17th St

Cycle (sec):	100	Critical Vol./Cap.(X):	0.478
Loss Time (sec):	0 (Y+R=4.0 sec)	Average Delay (sec/veh):	11.1
Optimal Cycle:	0	Level Of Service:	B

Street Name:	Monrovia Avenue						17th Street					
Approach:	North Bound			South Bound			East Bound			West Bound		
Movement:	L -	T -	R	L -	T -	R	L -	T -	R	L -	T -	R
Control:	Stop Sign			Stop Sign			Stop Sign			Stop Sign		
Rights:	Include			Include			Include			Include		
Min. Green:	0	0	0	0	0	0	0	0	0	0	0	0
Lanes:	0 0	1! 0	0	0 0	1! 0	0	0 0	1! 0	0	0 0	1! 0	0
Volume Module:												
Base Vol:	36	88	63	26	86	12	14	75	32	67	135	56
Growth Adj:	1.07	1.07	1.07	1.07	1.07	1.07	1.07	1.07	1.07	1.07	1.07	1.07
Initial Bse:	39	94	68	28	92	13	15	80	34	72	145	60
Added Vol:	0	22	40	0	27	0	0	0	0	43	0	0
Committed P:	0	0	0	0	0	0	0	0	0	0	0	0
Initial Fut:	39	116	108	28	119	13	15	80	34	115	145	60
User Adj:	1.00	1.00	1.00	1.00	1.00	1.00	1.00	1.00	1.00	1.00	1.00	1.00
PHF Adj:	1.00	1.00	1.00	1.00	1.00	1.00	1.00	1.00	1.00	1.00	1.00	1.00
PHF Volume:	39	116	108	28	119	13	15	80	34	115	145	60
Reduct Vol:	0	0	0	0	0	0	0	0	0	0	0	0
Reduced Vol:	39	116	108	28	119	13	15	80	34	115	145	60
PCE Adj:	1.00	1.00	1.00	1.00	1.00	1.00	1.00	1.00	1.00	1.00	1.00	1.00
MLF Adj:	1.00	1.00	1.00	1.00	1.00	1.00	1.00	1.00	1.00	1.00	1.00	1.00
FinalVolume:	39	116	108	28	119	13	15	80	34	115	145	60
Saturation Flow Module:												
Adjustment:	1.00	1.00	1.00	1.00	1.00	1.00	1.00	1.00	1.00	1.00	1.00	1.00
Lanes:	0.15	0.44	0.41	0.17	0.75	0.08	0.12	0.62	0.26	0.36	0.45	0.19
Final Sat.:	98	295	273	107	456	49	72	384	164	240	303	126
Capacity Analysis Module:												
Vol/Sat:	0.39	0.39	0.39	0.26	0.26	0.26	0.21	0.21	0.21	0.48	0.48	0.48
Crit Moves:		****			****			****			****	
Delay/Veh:	11.0	11.0	11.0	10.1	10.1	10.1	9.6	9.6	9.6	12.3	12.3	12.3
Delay Adj:	1.00	1.00	1.00	1.00	1.00	1.00	1.00	1.00	1.00	1.00	1.00	1.00
AdjDel/Veh:	11.0	11.0	11.0	10.1	10.1	10.1	9.6	9.6	9.6	12.3	12.3	12.3
LOS by Move:	B	B	B	B	B	B	A	A	A	B	B	B
ApproachDel:		11.0			10.1			9.6			12.3	
Delay Adj:		1.00			1.00			1.00			1.00	
ApprAdjDel:		11.0			10.1			9.6			12.3	
LOS by Appr:		B			B			A			B	
AllWayAvgQ:	0.5	0.5	0.5	0.3	0.3	0.3	0.2	0.2	0.2	0.8	0.8	0.8

Newport Banning Ranch
Year 2016 Cumulative Conditions without Project
AM Peak Hour

Note: Queue reported is the number of cars per lane.

Newport Banning Ranch
Year 2016 Cumulative Conditions without Project
AM Peak Hour

Level Of Service Computation Report
ICU 1(Loss as Cycle Length %) Method (Future Volume Alternative)

Intersection #41 Placentia Ave/17th St

Cycle (sec):	100	Critical Vol./Cap.(X):	0.497
Loss Time (sec):	0 (Y+R=4.0 sec)	Average Delay (sec/veh):	xxxxxx
Optimal Cycle:	29	Level Of Service:	A

Street Name:	Placentia Avenue						17th St					
Approach:	North Bound			South Bound			East Bound			West Bound		
Movement:	L - T - R			L - T - R			L - T - R			L - T - R		
Control:	Permitted			Permitted			Permitted			Permitted		
Rights:	Include			Include			Include			Include		
Min. Green:	0	0	0	0	0	0	0	0	0	0	0	0
Lanes:	1 0	1 1	0	1 0	1 1	0	1 0	0 1	0	1 0	0 1	0
Volume Module:												
Base Vol:	89	378	59	166	537	77	12	141	31	44	162	80
Growth Adj:	1.07	1.07	1.07	1.07	1.07	1.07	1.07	1.07	1.07	1.07	1.07	1.07
Initial Bse:	95	405	63	178	576	83	13	151	33	47	174	86
Added Vol:	0	24	2	0	74	36	33	7	0	9	7	0
Committed P:	3	5	3	0	2	0	0	0	0	0	0	0
Initial Fut:	98	434	68	178	652	119	46	158	33	56	181	86
User Adj:	1.00	1.00	1.00	1.00	1.00	1.00	1.00	1.00	1.00	1.00	1.00	1.00
PHF Adj:	1.00	1.00	1.00	1.00	1.00	1.00	1.00	1.00	1.00	1.00	1.00	1.00
PHF Volume:	98	434	68	178	652	119	46	158	33	56	181	86
Reduct Vol:	0	0	0	0	0	0	0	0	0	0	0	0
Reduced Vol:	98	434	68	178	652	119	46	158	33	56	181	86
PCE Adj:	1.00	1.00	1.00	1.00	1.00	1.00	1.00	1.00	1.00	1.00	1.00	1.00
MLF Adj:	1.00	1.00	1.00	1.00	1.00	1.00	1.00	1.00	1.00	1.00	1.00	1.00
FinalVolume:	98	434	68	178	652	119	46	158	33	56	181	86
Saturation Flow Module:												
Sat/Lane:	1600	1600	1600	1600	1600	1600	1600	1600	1600	1600	1600	1600
Adjustment:	1.00	1.00	1.00	1.00	1.00	1.00	1.00	1.00	1.00	1.00	1.00	1.00
Lanes:	1.00	1.73	0.27	1.00	1.69	0.31	1.00	0.83	0.17	1.00	0.68	0.32
Final Sat.:	1600	2765	435	1600	2707	493	1600	1322	278	1600	1085	515
Capacity Analysis Module:												
Vol/Sat:	0.06	0.16	0.16	0.11	0.24	0.24	0.03	0.12	0.12	0.04	0.17	0.17
Crit Moves:	****				****		****				****	

Newport Banning Ranch
Year 2016 Cumulative Conditions without Project
AM Peak Hour

Level Of Service Computation Report
2000 HCM 4-Way Stop Method (Future Volume Alternative)

Intersection #42 Pomona Ave/17th St

Cycle (sec): 100 Critical Vol./Cap.(X): 0.650
Loss Time (sec): 0 (Y+R=4.0 sec) Average Delay (sec/veh): 15.3
Optimal Cycle: 0 Level Of Service: C

Street Name:	Pomona Avenue						17th Street					
Approach:	North Bound			South Bound			East Bound			West Bound		
Movement:	L - T - R			L - T - R			L - T - R			L - T - R		
Control:	Stop Sign			Stop Sign			Stop Sign			Stop Sign		
Rights:	Include			Include			Include			Include		
Min. Green:	0	0	0	0	0	0	0	0	0	0	0	0
Lanes:	0 0 1!	0 0		0 0 1!	0 0		1 0 0 1	0		1 0 1	0 1	
Volume Module:												
Base Vol:	6	40	19	101	116	59	12	303	29	60	273	53
Growth Adj:	1.07	1.07	1.07	1.07	1.07	1.07	1.07	1.07	1.07	1.07	1.07	1.07
Initial Bse:	6	43	20	108	124	63	13	325	31	64	293	57
Added Vol:	0	0	0	0	0	0	0	13	0	0	9	6
Committed P:	0	0	0	0	0	0	0	0	0	0	0	0
Initial Fut:	6	43	20	108	124	63	13	338	31	64	302	63
User Adj:	1.00	1.00	1.00	1.00	1.00	1.00	1.00	1.00	1.00	1.00	1.00	1.00
PHF Adj:	1.00	1.00	1.00	1.00	1.00	1.00	1.00	1.00	1.00	1.00	1.00	1.00
PHF Volume:	6	43	20	108	124	63	13	338	31	64	302	63
Reduct Vol:	0	0	0	0	0	0	0	0	0	0	0	0
Reduced Vol:	6	43	20	108	124	63	13	338	31	64	302	63
PCE Adj:	1.00	1.00	1.00	1.00	1.00	1.00	1.00	1.00	1.00	1.00	1.00	1.00
MLF Adj:	1.00	1.00	1.00	1.00	1.00	1.00	1.00	1.00	1.00	1.00	1.00	1.00
FinalVolume:	6	43	20	108	124	63	13	338	31	64	302	63
Saturation Flow Module:												
Adjustment:	1.00	1.00	1.00	1.00	1.00	1.00	1.00	1.00	1.00	1.00	1.00	1.00
Lanes:	0.09	0.62	0.29	0.37	0.42	0.21	1.00	0.92	0.08	1.00	1.00	1.00
Final Sat.:	44	293	139	205	235	120	519	520	48	521	564	629
Capacity Analysis Module:												
Vol/Sat:	0.15	0.15	0.15	0.53	0.53	0.53	0.02	0.65	0.65	0.12	0.53	0.10
Crit Moves:	****				****				****		****	
Delay/Veh:	10.5	10.5	10.5	14.9	14.9	14.9	9.6	18.8	18.8	10.3	15.3	8.8
Delay Adj:	1.00	1.00	1.00	1.00	1.00	1.00	1.00	1.00	1.00	1.00	1.00	1.00
AdjDel/Veh:	10.5	10.5	10.5	14.9	14.9	14.9	9.6	18.8	18.8	10.3	15.3	8.8
LOS by Move:	B	B	B	B	B	B	A	C	C	B	C	A
ApproachDel:	10.5			14.9			18.5			13.6		
Delay Adj:	1.00			1.00			1.00			1.00		
ApprAdjDel:	10.5			14.9			18.5			13.6		
LOS by Appr:	B			B			C			B		
AllWayAvgQ:	0.1	0.1	0.1	0.9	0.9	0.9	0.0	1.6	1.6	0.1	1.0	0.1

Newport Banning Ranch
Year 2016 Cumulative Conditions without Project
AM Peak Hour

Note: Queue reported is the number of cars per lane.

Newport Banning Ranch
Year 2016 Cumulative Conditions without Project
AM Peak Hour

Level Of Service Computation Report
ICU 1(Loss as Cycle Length %) Method (Future Volume Alternative)

Intersection #43 Superior Ave/17th St

Cycle (sec):	100	Critical Vol./Cap.(X):	0.703
Loss Time (sec):	0 (Y+R=4.0 sec)	Average Delay (sec/veh):	xxxxxx
Optimal Cycle:	77	Level Of Service:	C

Street Name:	Superior Avenue						17th Street					
Approach:	North Bound			South Bound			East Bound			West Bound		
Movement:	L - T - R			L - T - R			L - T - R			L - T - R		
Control:	Prot+Permit			Prot+Permit			Prot+Permit			Prot+Permit		
Rights:	Include			Include			Include			Include		
Min. Green:	0	0	0	0	0	0	0	0	0	0	0	0
Lanes:	1 0 0 1 1			1 0 1 1 0			1 0 1 1 0			1 0 1 1 0		
Volume Module:												
Base Vol:	39	123	703	49	213	39	8	386	35	363	366	48
Growth Adj:	1.07	1.07	1.07	1.07	1.07	1.07	1.07	1.07	1.07	1.07	1.07	1.07
Initial Bse:	42	132	754	53	228	42	9	414	38	389	392	51
Added Vol:	0	5	1	0	11	0	0	13	0	0	9	0
Committed P:	3	9	0	0	17	0	0	0	3	0	0	0
Initial Fut:	45	146	755	53	256	42	9	427	41	389	401	51
User Adj:	1.00	1.00	1.00	1.00	1.00	1.00	1.00	1.00	1.00	1.00	1.00	1.00
PHF Adj:	1.00	1.00	1.00	1.00	1.00	1.00	1.00	1.00	1.00	1.00	1.00	1.00
PHF Volume:	45	146	755	53	256	42	9	427	41	389	401	51
Reduct Vol:	0	0	0	0	0	0	0	0	0	0	0	0
Reduced Vol:	45	146	755	53	256	42	9	427	41	389	401	51
PCE Adj:	1.00	1.00	1.00	1.00	1.00	1.00	1.00	1.00	1.00	1.00	1.00	1.00
MLF Adj:	1.00	1.00	1.00	1.00	1.00	1.00	1.00	1.00	1.00	1.00	1.00	1.00
FinalVolume:	45	146	755	53	256	42	9	427	41	389	401	51
Saturation Flow Module:												
Sat/Lane:	1600	1600	1600	1600	1600	1600	1600	1600	1600	1600	1600	1600
Adjustment:	1.00	1.00	1.00	1.00	1.00	1.00	1.00	1.00	1.00	1.00	1.00	1.00
Lanes:	1.00	0.32	1.68	1.00	1.72	0.28	1.00	1.83	0.17	1.00	1.77	0.23
Final Sat.:	1600	518	2682	1600	2751	449	1600	2923	277	1600	2836	364
Capacity Analysis Module:												
Vol/Sat:	0.03	0.28	0.28	0.03	0.09	0.09	0.01	0.15	0.15	0.24	0.14	0.14
Crit Moves:		****		****				****		****		

Newport Banning Ranch
Year 2016 Cumulative Conditions without Project
AM Peak Hour

Level Of Service Computation Report
ICU 1(Loss as Cycle Length %) Method (Future Volume Alternative)

Intersection #44 Newport Blvd/17th St

Cycle (sec):	120	Critical Vol./Cap.(X):	0.798
Loss Time (sec):	0 (Y+R=4.0 sec)	Average Delay (sec/veh):	xxxxxx
Optimal Cycle:	113	Level Of Service:	C

Street Name:	Newport Boulevard						17th Street					
Approach:	North Bound			South Bound			East Bound			West Bound		
Movement:	L - T - R			L - T - R			L - T - R			L - T - R		
Control:	Protected			Protected			Protected			Protected		
Rights:	Include			Include			Include			Include		
Min. Green:	0	0	0	0	0	0	0	0	0	0	0	0
Lanes:	1 0 3	1 0		2 0 3	0 1		3 0 1	1 0		2 0 3	0 1	
Volume Module:												
Base Vol:	50	1789	209	559	1808	328	759	396	3	142	400	147
Growth Adj:	1.07	1.07	1.07	1.07	1.07	1.07	1.07	1.07	1.07	1.07	1.07	1.07
Initial Bse:	54	1918	224	599	1938	352	814	425	3	152	429	158
Added Vol:	0	5	0	0	18	0	1	13	0	0	9	0
Committed P:	0	47	0	0	53	0	0	0	0	0	0	0
Initial Fut:	54	1970	224	599	2009	352	815	438	3	152	438	158
User Adj:	1.00	1.00	1.00	1.00	1.00	1.00	1.00	1.00	1.00	1.00	1.00	1.00
PHF Adj:	1.00	1.00	1.00	1.00	1.00	1.00	1.00	1.00	1.00	1.00	1.00	1.00
PHF Volume:	54	1970	224	599	2009	352	815	438	3	152	438	158
Reduct Vol:	0	0	0	0	0	0	0	0	0	0	0	0
Reduced Vol:	54	1970	224	599	2009	352	815	438	3	152	438	158
PCE Adj:	1.00	1.00	1.00	1.00	1.00	1.00	1.00	1.00	1.00	1.00	1.00	1.00
MLF Adj:	1.00	1.00	1.00	1.00	1.00	1.00	1.00	1.00	1.00	1.00	1.00	1.00
FinalVolume:	54	1970	224	599	2009	352	815	438	3	152	438	158
Saturation Flow Module:												
Sat/Lane:	1600	1600	1600	1600	1600	1600	1600	1600	1600	1600	1600	1600
Adjustment:	1.00	1.00	1.00	1.00	1.00	1.00	1.00	1.00	1.00	1.00	1.00	1.00
Lanes:	1.00	3.59	0.41	2.00	3.00	1.00	3.00	1.99	0.01	2.00	3.00	1.00
Final Sat.:	1600	5746	654	3200	4800	1600	4800	3177	23	3200	4800	1600
Capacity Analysis Module:												
Vol/Sat:	0.03	0.34	0.34	0.19	0.42	0.22	0.17	0.14	0.14	0.05	0.09	0.10
Crit Moves:		****		****			****					****

Newport Banning Ranch
Year 2016 Cumulative Conditions without Project
AM Peak Hour

Level Of Service Computation Report
ICU 1(Loss as Cycle Length %) Method (Future Volume Alternative)

Intersection #45 Orange Ave/17th St

Cycle (sec):	100	Critical Vol./Cap.(X):	0.446
Loss Time (sec):	0 (Y+R=4.0 sec)	Average Delay (sec/veh):	xxxxxx
Optimal Cycle:	41	Level Of Service:	A

Street Name:	Orange Avenue						17th Street					
Approach:	North Bound			South Bound			East Bound			West Bound		
Movement:	L - T - R			L - T - R			L - T - R			L - T - R		
Control:	Prot+Permit			Prot+Permit			Prot+Permit			Prot+Permit		
Rights:	Include			Include			Include			Include		
Min. Green:	0	0	0	0	0	0	0	0	0	0	0	0
Lanes:	1 0 1	1 0		1 0 1	0 1		1 0 2	0 1		1 0 2	0 1	
Volume Module:												
Base Vol:	106	188	37	123	141	78	42	766	86	40	692	121
Growth Adj:	1.07	1.07	1.07	1.07	1.07	1.07	1.07	1.07	1.07	1.07	1.07	1.07
Initial Bse:	114	202	40	132	151	84	45	821	92	43	742	130
Added Vol:	0	0	0	0	0	0	0	13	0	0	9	0
Committed P:	0	0	0	0	0	0	0	1	0	1	2	1
Initial Fut:	114	202	40	132	151	84	45	835	92	44	753	131
User Adj:	1.00	1.00	1.00	1.00	1.00	1.00	1.00	1.00	1.00	1.00	1.00	1.00
PHF Adj:	1.00	1.00	1.00	1.00	1.00	1.00	1.00	1.00	1.00	1.00	1.00	1.00
PHF Volume:	114	202	40	132	151	84	45	835	92	44	753	131
Reduct Vol:	0	0	0	0	0	0	0	0	0	0	0	0
Reduced Vol:	114	202	40	132	151	84	45	835	92	44	753	131
PCE Adj:	1.00	1.00	1.00	1.00	1.00	1.00	1.00	1.00	1.00	1.00	1.00	1.00
MLF Adj:	1.00	1.00	1.00	1.00	1.00	1.00	1.00	1.00	1.00	1.00	1.00	1.00
FinalVolume:	114	202	40	132	151	84	45	835	92	44	753	131
Saturation Flow Module:												
Sat/Lane:	1600	1600	1600	1600	1600	1600	1600	1600	1600	1600	1600	1600
Adjustment:	1.00	1.00	1.00	1.00	1.00	1.00	1.00	1.00	1.00	1.00	1.00	1.00
Lanes:	1.00	1.67	0.33	1.00	1.00	1.00	1.00	2.00	1.00	1.00	2.00	1.00
Final Sat.:	1600	2674	526	1600	1600	1600	1600	3200	1600	1600	3200	1600
Capacity Analysis Module:												
Vol/Sat:	0.07	0.08	0.08	0.08	0.09	0.05	0.03	0.26	0.06	0.03	0.24	0.08
Crit Moves:		****		****				****		****		

Newport Banning Ranch
Year 2016 Cumulative Conditions without Project
AM Peak Hour

Level Of Service Computation Report
ICU 1(Loss as Cycle Length %) Method (Future Volume Alternative)

Intersection #46 Santa Ana Ave/17th St

Cycle (sec):	100	Critical Vol./Cap.(X):	0.428
Loss Time (sec):	0 (Y+R=4.0 sec)	Average Delay (sec/veh):	xxxxxx
Optimal Cycle:	33	Level Of Service:	A

Street Name:	Santa Ana Avenue						17th Street					
Approach:	North Bound			South Bound			East Bound			West Bound		
Movement:	L - T - R			L - T - R			L - T - R			L - T - R		
Control:	Permitted			Permitted			Prot+Permit			Prot+Permit		
Rights:	Include			Include			Include			Include		
Min. Green:	0	0	0	0	0	0	0	0	0	0	0	0
Lanes:	1 0 1	0 1		1 0 1	0 1		1 0 2	0 1		1 0 2	0 1	
Volume Module:												
Base Vol:	89	120	70	74	106	62	34	787	41	40	761	58
Growth Adj:	1.07	1.07	1.07	1.07	1.07	1.07	1.07	1.07	1.07	1.07	1.07	1.07
Initial Bse:	95	129	75	79	114	66	36	844	44	43	816	62
Added Vol:	0	0	0	0	0	0	0	16	0	0	18	0
Committed P:	0	0	1	1	0	0	0	3	0	2	8	2
Initial Fut:	95	129	76	80	114	66	36	863	44	45	842	64
User Adj:	1.00	1.00	1.00	1.00	1.00	1.00	1.00	1.00	1.00	1.00	1.00	1.00
PHF Adj:	1.00	1.00	1.00	1.00	1.00	1.00	1.00	1.00	1.00	1.00	1.00	1.00
PHF Volume:	95	129	76	80	114	66	36	863	44	45	842	64
Reduct Vol:	0	0	0	0	0	0	0	0	0	0	0	0
Reduced Vol:	95	129	76	80	114	66	36	863	44	45	842	64
PCE Adj:	1.00	1.00	1.00	1.00	1.00	1.00	1.00	1.00	1.00	1.00	1.00	1.00
MLF Adj:	1.00	1.00	1.00	1.00	1.00	1.00	1.00	1.00	1.00	1.00	1.00	1.00
FinalVolume:	95	129	76	80	114	66	36	863	44	45	842	64
Saturation Flow Module:												
Sat/Lane:	1600	1600	1600	1600	1600	1600	1600	1600	1600	1600	1600	1600
Adjustment:	1.00	1.00	1.00	1.00	1.00	1.00	1.00	1.00	1.00	1.00	1.00	1.00
Lanes:	1.00	1.00	1.00	1.00	1.00	1.00	1.00	2.00	1.00	1.00	2.00	1.00
Final Sat.:	1600	1600	1600	1600	1600	1600	1600	3200	1600	1600	3200	1600
Capacity Analysis Module:												
Vol/Sat:	0.06	0.08	0.05	0.05	0.07	0.04	0.02	0.27	0.03	0.03	0.26	0.04
Crit Moves:	****				****			****		****		

Newport Banning Ranch
Year 2016 Cumulative Conditions without Project
AM Peak Hour

Level Of Service Computation Report
ICU 1(Loss as Cycle Length %) Method (Future Volume Alternative)

Intersection #47 Tustin Ave/17th St

Cycle (sec):	100	Critical Vol./Cap.(X):	0.517
Loss Time (sec):	0 (Y+R=4.0 sec)	Average Delay (sec/veh):	xxxxxx
Optimal Cycle:	39	Level Of Service:	A

Street Name:	Tustin Avenue						17th Street					
Approach:	North Bound			South Bound			East Bound			West Bound		
Movement:	L - T - R			L - T - R			L - T - R			L - T - R		
Control:	Permitted			Permitted			Prot+Permit			Prot+Permit		
Rights:	Include			Include			Include			Include		
Min. Green:	0	0	0	0	0	0	0	0	0	0	0	0
Lanes:	1 0 0	1 0		1 0	1 0 1		1 0	1 1 0		1 0	1 1 0	
Volume Module:												
Base Vol:	94	139	80	48	94	39	36	807	91	40	732	34
Growth Adj:	1.07	1.07	1.07	1.07	1.07	1.07	1.07	1.07	1.07	1.07	1.07	1.07
Initial Bse:	101	149	86	51	101	42	39	865	98	43	785	36
Added Vol:	0	0	0	0	0	0	0	16	0	0	18	0
Committed P:	0	0	2	2	0	0	0	7	0	2	14	2
Initial Fut:	101	149	88	53	101	42	39	888	98	45	817	38
User Adj:	1.00	1.00	1.00	1.00	1.00	1.00	1.00	1.00	1.00	1.00	1.00	1.00
PHF Adj:	1.00	1.00	1.00	1.00	1.00	1.00	1.00	1.00	1.00	1.00	1.00	1.00
PHF Volume:	101	149	88	53	101	42	39	888	98	45	817	38
Reduct Vol:	0	0	0	0	0	0	0	0	0	0	0	0
Reduced Vol:	101	149	88	53	101	42	39	888	98	45	817	38
PCE Adj:	1.00	1.00	1.00	1.00	1.00	1.00	1.00	1.00	1.00	1.00	1.00	1.00
MLF Adj:	1.00	1.00	1.00	1.00	1.00	1.00	1.00	1.00	1.00	1.00	1.00	1.00
FinalVolume:	101	149	88	53	101	42	39	888	98	45	817	38
Saturation Flow Module:												
Sat/Lane:	1600	1600	1600	1600	1600	1600	1600	1600	1600	1600	1600	1600
Adjustment:	1.00	1.00	1.00	1.00	1.00	1.00	1.00	1.00	1.00	1.00	1.00	1.00
Lanes:	1.00	0.63	0.37	1.00	1.00	1.00	1.00	1.80	0.20	1.00	1.91	0.09
Final Sat.:	1600	1007	593	1600	1600	1600	1600	2883	317	1600	3056	144
Capacity Analysis Module:												
Vol/Sat:	0.06	0.15	0.15	0.03	0.06	0.03	0.02	0.31	0.31	0.03	0.27	0.27
Crit Moves:		****		****				****		****		

Newport Banning Ranch
Year 2016 Cumulative Conditions without Project
AM Peak Hour

Level Of Service Computation Report
ICU 1(Loss as Cycle Length %) Method (Future Volume Alternative)

Intersection #48 Irvine Ave/17th St

Cycle (sec):	100	Critical Vol./Cap.(X):	0.557
Loss Time (sec):	0 (Y+R=4.0 sec)	Average Delay (sec/veh):	xxxxxx
Optimal Cycle:	51	Level Of Service:	A

Street Name:	Irvine Avenue						17th Street					
Approach:	North Bound			South Bound			East Bound			West Bound		
Movement:	L - T - R			L - T - R			L - T - R			L - T - R		
Control:	Protected			Protected			Protected			Protected		
Rights:	Include			Include			Include			Include		
Min. Green:	0	0	0	0	0	0	0	0	0	0	0	0
Lanes:	2 0 2	0 1		2 0 2	0 1		2 0 1	1 0		1 0 1	1 0	
Volume Module:												
Base Vol:	274	590	35	203	458	127	209	489	217	33	299	40
Growth Adj:	1.07	1.07	1.07	1.07	1.07	1.07	1.07	1.07	1.07	1.07	1.07	1.07
Initial Bse:	294	632	38	218	491	136	224	524	233	35	321	43
Added Vol:	4	1	11	4	2	0	0	11	4	37	14	1
Committed P:	1	1	0	0	0	6	3	9	1	0	14	0
Initial Fut:	299	634	49	222	493	142	227	544	238	72	349	44
User Adj:	1.00	1.00	1.00	1.00	1.00	1.00	1.00	1.00	1.00	1.00	1.00	1.00
PHF Adj:	1.00	1.00	1.00	1.00	1.00	1.00	1.00	1.00	1.00	1.00	1.00	1.00
PHF Volume:	299	634	49	222	493	142	227	544	238	72	349	44
Reduct Vol:	0	0	0	0	0	0	0	0	0	0	0	0
Reduced Vol:	299	634	49	222	493	142	227	544	238	72	349	44
PCE Adj:	1.00	1.00	1.00	1.00	1.00	1.00	1.00	1.00	1.00	1.00	1.00	1.00
MLF Adj:	1.00	1.00	1.00	1.00	1.00	1.00	1.00	1.00	1.00	1.00	1.00	1.00
FinalVolume:	299	634	49	222	493	142	227	544	238	72	349	44
Saturation Flow Module:												
Sat/Lane:	1600	1600	1600	1600	1600	1600	1600	1600	1600	1600	1600	1600
Adjustment:	1.00	1.00	1.00	1.00	1.00	1.00	1.00	1.00	1.00	1.00	1.00	1.00
Lanes:	2.00	2.00	1.00	2.00	2.00	1.00	2.00	1.39	0.61	1.00	1.78	0.22
Final Sat.:	3200	3200	1600	3200	3200	1600	3200	2227	973	1600	2842	358
Capacity Analysis Module:												
Vol/Sat:	0.09	0.20	0.03	0.07	0.15	0.09	0.07	0.24	0.24	0.05	0.12	0.12
Crit Moves:		****		****				****		****		

Newport Banning Ranch
Year 2016 Cumulative Conditions without Project
AM Peak Hour

Level Of Service Computation Report
ICU 1(Loss as Cycle Length %) Method (Future Volume Alternative)

Intersection #49 Placentia Ave/16th St

Cycle (sec):	100	Critical Vol./Cap.(X):	0.393
Loss Time (sec):	0 (Y+R=4.0 sec)	Average Delay (sec/veh):	xxxxxx
Optimal Cycle:	24	Level Of Service:	A

Street Name:	Placentia Avenue						16th Street					
Approach:	North Bound			South Bound			East Bound			West Bound		
Movement:	L - T - R			L - T - R			L - T - R			L - T - R		
Control:	Permitted			Permitted			Permitted			Permitted		
Rights:	Include			Include			Include			Include		
Min. Green:	0	0	0	0	0	0	0	0	0	0	0	0
Lanes:	1 0	1 1	0	1 0	1 1	0	1 0	0 1	0	1 0	0 1	0
Volume Module:												
Base Vol:	76	454	36	70	442	88	26	57	31	17	105	35
Growth Adj:	1.07	1.07	1.07	1.07	1.07	1.07	1.07	1.07	1.07	1.07	1.07	1.07
Initial Bse:	81	487	39	75	474	94	28	61	33	18	113	38
Added Vol:	0	6	0	0	35	48	20	10	0	0	20	0
Committed P:	3	13	3	0	3	0	0	0	0	0	0	0
Initial Fut:	84	506	42	75	512	142	48	71	33	18	133	38
User Adj:	1.00	1.00	1.00	1.00	1.00	1.00	1.00	1.00	1.00	1.00	1.00	1.00
PHF Adj:	1.00	1.00	1.00	1.00	1.00	1.00	1.00	1.00	1.00	1.00	1.00	1.00
PHF Volume:	84	506	42	75	512	142	48	71	33	18	133	38
Reduct Vol:	0	0	0	0	0	0	0	0	0	0	0	0
Reduced Vol:	84	506	42	75	512	142	48	71	33	18	133	38
PCE Adj:	1.00	1.00	1.00	1.00	1.00	1.00	1.00	1.00	1.00	1.00	1.00	1.00
MLF Adj:	1.00	1.00	1.00	1.00	1.00	1.00	1.00	1.00	1.00	1.00	1.00	1.00
FinalVolume:	84	506	42	75	512	142	48	71	33	18	133	38
Saturation Flow Module:												
Sat/Lane:	1600	1600	1600	1600	1600	1600	1600	1600	1600	1600	1600	1600
Adjustment:	1.00	1.00	1.00	1.00	1.00	1.00	1.00	1.00	1.00	1.00	1.00	1.00
Lanes:	1.00	1.85	0.15	1.00	1.56	0.44	1.00	0.68	0.32	1.00	0.78	0.22
Final Sat.:	1600	2957	243	1600	2504	696	1600	1090	510	1600	1247	353
Capacity Analysis Module:												
Vol/Sat:	0.05	0.17	0.17	0.05	0.20	0.20	0.03	0.07	0.07	0.01	0.11	0.11
Crit Moves:	****				****		****				****	

Newport Banning Ranch
Year 2016 Cumulative Conditions without Project
AM Peak Hour

Level Of Service Computation Report
ICU 1(Loss as Cycle Length %) Method (Future Volume Alternative)

Intersection #50 Superior Ave/16th St

Cycle (sec):	100	Critical Vol./Cap.(X):	0.495
Loss Time (sec):	0 (Y+R=4.0 sec)	Average Delay (sec/veh):	xxxxxx
Optimal Cycle:	28	Level Of Service:	A

Street Name:	Superior Avenue						16th Street					
Approach:	North Bound			South Bound			East Bound			West Bound		
Movement:	L - T - R			L - T - R			L - T - R			L - T - R		
Control:	Permitted			Permitted			Permitted			Permitted		
Rights:	Include			Include			Include			Include		
Min. Green:	0	0	0	0	0	0	0	0	0	0	0	0
Lanes:	1 0 2	0	1	1 0 1	1	0	1 0 1	0	0	0 1 0	0	1
Volume Module:												
Base Vol:	25	967	66	41	540	130	23	173	0	15	153	15
Growth Adj:	1.07	1.07	1.07	1.07	1.07	1.07	1.07	1.07	1.07	1.07	1.07	1.07
Initial Bse:	27	1037	71	44	579	139	25	185	0	16	164	16
Added Vol:	0	0	0	0	4	17	7	3	0	0	4	0
Committed P:	0	27	0	0	23	0	0	0	0	0	0	0
Initial Fut:	27	1064	71	44	606	156	32	188	0	16	168	16
User Adj:	1.00	1.00	1.00	1.00	1.00	1.00	1.00	1.00	1.00	1.00	1.00	1.00
PHF Adj:	1.00	1.00	1.00	1.00	1.00	1.00	1.00	1.00	1.00	1.00	1.00	1.00
PHF Volume:	27	1064	71	44	606	156	32	188	0	16	168	16
Reduct Vol:	0	0	0	0	0	0	0	0	0	0	0	0
Reduced Vol:	27	1064	71	44	606	156	32	188	0	16	168	16
PCE Adj:	1.00	1.00	1.00	1.00	1.00	1.00	1.00	1.00	1.00	1.00	1.00	1.00
MLF Adj:	1.00	1.00	1.00	1.00	1.00	1.00	1.00	1.00	1.00	1.00	1.00	1.00
FinalVolume:	27	1064	71	44	606	156	32	188	0	16	168	16
Saturation Flow Module:												
Sat/Lane:	1600	1600	1600	1600	1600	1600	1600	1600	1600	1600	1600	1600
Adjustment:	1.00	1.00	1.00	1.00	1.00	1.00	1.00	1.00	1.00	1.00	1.00	1.00
Lanes:	1.00	2.00	1.00	1.00	1.59	0.41	1.00	1.00	0.00	0.09	0.91	1.00
Final Sat.:	1600	3200	1600	1600	2544	656	1600	1600	0	140	1460	1600
Capacity Analysis Module:												
Vol/Sat:	0.02	0.33	0.04	0.03	0.24	0.24	0.02	0.12	0.00	0.01	0.12	0.01
Crit Moves:		****		****			****				****	

Newport Banning Ranch
Year 2016 Cumulative Conditions without Project
AM Peak Hour

Level Of Service Computation Report
ICU 1(Loss as Cycle Length %) Method (Future Volume Alternative)

Intersection #51 Newport Blvd/16th St

Cycle (sec):	120	Critical Vol./Cap.(X):	0.549
Loss Time (sec):	0 (Y+R=4.0 sec)	Average Delay (sec/veh):	xxxxxx
Optimal Cycle:	41	Level Of Service:	A

Street Name:	Newport Boulevard									16th Street								
Approach:	North Bound			South Bound			East Bound			West Bound		
Movement:	L	- T	- R	L	- T	- R	L	- T	- R	L	- T	- R
Control:	Protected			Protected			Permitted			Permitted		
Rights:	Include			Include			Include			Include		
Min. Green:	0	0	0	0	0	0	0	0	0	0	0	0
Lanes:	1 0	2 1	0	1 0	3 0	1	0 0	1! 0	0	0 0	1! 0	0
Volume Module:												
Base Vol:	8	1539	42	60	1370	49	38	44	13	19	68	77
Growth Adj:	1.07	1.07	1.07	1.07	1.07	1.07	1.07	1.07	1.07	1.07	1.07	1.07
Initial Bse:	9	1650	45	64	1469	53	41	47	14	20	73	83
Added Vol:	0	5	0	0	18	0	0	0	0	0	0	0
Committed P:	2	47	10	0	53	0	0	0	5	12	0	0
Initial Fut:	11	1702	55	64	1540	53	41	47	19	32	73	83
User Adj:	1.00	1.00	1.00	1.00	1.00	1.00	1.00	1.00	1.00	1.00	1.00	1.00
PHF Adj:	1.00	1.00	1.00	1.00	1.00	1.00	1.00	1.00	1.00	1.00	1.00	1.00
PHF Volume:	11	1702	55	64	1540	53	41	47	19	32	73	83
Reduct Vol:	0	0	0	0	0	0	0	0	0	0	0	0
Reduced Vol:	11	1702	55	64	1540	53	41	47	19	32	73	83
PCE Adj:	1.00	1.00	1.00	1.00	1.00	1.00	1.00	1.00	1.00	1.00	1.00	1.00
MLF Adj:	1.00	1.00	1.00	1.00	1.00	1.00	1.00	1.00	1.00	1.00	1.00	1.00
FinalVolume:	11	1702	55	64	1540	53	41	47	19	32	73	83
Saturation Flow Module:												
Sat/Lane:	1600	1600	1600	1600	1600	1600	1600	1600	1600	1600	1600	1600
Adjustment:	1.00	1.00	1.00	1.00	1.00	1.00	1.00	1.00	1.00	1.00	1.00	1.00
Lanes:	1.00	2.91	0.09	1.00	3.00	1.00	0.38	0.44	0.18	0.17	0.39	0.44
Final Sat.:	1600	4650	150	1600	4800	1600	610	706	284	276	621	703
Capacity Analysis Module:												
Vol/Sat:	0.01	0.37	0.37	0.04	0.32	0.03	0.03	0.07	0.07	0.02	0.12	0.12
Crit Moves:		****		****			****				****	

Newport Banning Ranch
Year 2016 Cumulative Conditions without Project
AM Peak Hour

Level Of Service Computation Report
ICU 1(Loss as Cycle Length %) Method (Future Volume Alternative)

Intersection #52 Bluff Rd/Victoria St

Cycle (sec):	100	Critical Vol./Cap.(X):	0.511
Loss Time (sec):	0 (Y+R=4.0 sec)	Average Delay (sec/veh):	xxxxxx
Optimal Cycle:	47	Level Of Service:	A

Street Name:	Bluff Road						Victoria St					
Approach:	North Bound			South Bound			East Bound			West Bound		
Movement:	L - T - R			L - T - R			L - T - R			L - T - R		
Control:	Protected			Protected			Protected			Protected		
Rights:	Include			Include			Include			Include		
Min. Green:	0	0	0	0	0	0	0	0	0	0	0	0
Lanes:	0 0 0 0 0			0 0 0 0 0			0 0 2 0 0			0 0 2 0 0		
Volume Module:												
Base Vol:	0	0	0	0	0	0	0	1505	0	0	749	0
Growth Adj:	1.00	1.00	1.00	1.00	1.00	1.00	1.00	1.07	1.00	1.00	1.07	1.00
Initial Bse:	0	0	0	0	0	0	0	1613	0	0	803	0
Added Vol:	0	0	0	0	0	0	0	22	0	0	28	0
PasserByVol:	0	0	0	0	0	0	0	0	0	0	0	0
Initial Fut:	0	0	0	0	0	0	0	1635	0	0	831	0
User Adj:	1.00	1.00	1.00	1.00	1.00	1.00	1.00	1.00	1.00	1.00	1.00	1.00
PHF Adj:	1.00	1.00	1.00	1.00	1.00	1.00	1.00	1.00	1.00	1.00	1.00	1.00
PHF Volume:	0	0	0	0	0	0	0	1635	0	0	831	0
Reduct Vol:	0	0	0	0	0	0	0	0	0	0	0	0
Reduced Vol:	0	0	0	0	0	0	0	1635	0	0	831	0
PCE Adj:	1.00	1.00	1.00	1.00	1.00	1.00	1.00	1.00	1.00	1.00	1.00	1.00
MLF Adj:	1.00	1.00	1.00	1.00	1.00	1.00	1.00	1.00	1.00	1.00	1.00	1.00
FinalVolume:	0	0	0	0	0	0	0	1635	0	0	831	0
Saturation Flow Module:												
Sat/Lane:	1600	1600	1600	1600	1600	1600	1600	1600	1600	1600	1600	1600
Adjustment:	1.00	1.00	1.00	1.00	1.00	1.00	1.00	1.00	1.00	1.00	1.00	1.00
Lanes:	0.00	0.00	0.00	0.00	0.00	0.00	0.00	2.00	0.00	0.00	2.00	0.00
Final Sat.:	0	0	0	0	0	0	0	3200	0	0	3200	0
Capacity Analysis Module:												
Vol/Sat:	0.00	0.00	0.00	0.00	0.00	0.00	0.00	0.51	0.00	0.00	0.26	0.00
Crit Moves:								****		****		

Newport Banning Ranch
Year 2016 Cumulative Conditions without Project
AM Peak Hour

Level Of Service Computation Report
ICU 1(Loss as Cycle Length %) Method (Future Volume Alternative)

Intersection #53 Bluff Rd/19th St

Cycle (sec):	100	Critical Vol./Cap.(X):	0.000
Loss Time (sec):	0 (Y+R=4.0 sec)	Average Delay (sec/veh):	xxxxxx
Optimal Cycle:	0	Level Of Service:	

Street Name:	Bluff Rd						19th Street					
Approach:	North Bound			South Bound			East Bound			West Bound		
Movement:	L - T - R			L - T - R			L - T - R			L - T - R		
Control:	Permitted			Permitted			Permitted			Permitted		
Rights:	Include			Include			Include			Include		
Min. Green:	0	0	0	0	0	0	0	0	0	0	0	0
Lanes:	0 0 1	0	1	0 1	0	0	0 0 0	0	0	0 0 1!	0	0
Volume Module:												
Base Vol:	0	0	0	0	0	0	0	0	0	0	0	0
Growth Adj:	0.00	0.00	0.00	0.00	0.00	0.00	0.00	0.00	0.00	0.00	0.00	0.00
Initial Bse:	0	0	0	0	0	0	0	0	0	0	0	0
Added Vol:	0	0	0	0	0	0	0	0	0	0	0	0
PasserByVol:	0	0	0	0	0	0	0	0	0	0	0	0
Initial Fut:	0	0	0	0	0	0	0	0	0	0	0	0
User Adj:	0.00	0.00	0.00	0.00	0.00	0.00	0.00	0.00	0.00	0.00	0.00	0.00
PHF Adj:	0.00	0.00	0.00	0.00	0.00	0.00	0.00	0.00	0.00	0.00	0.00	0.00
PHF Volume:	0	0	0	0	0	0	0	0	0	0	0	0
Reduct Vol:	0	0	0	0	0	0	0	0	0	0	0	0
Reduced Vol:	0	0	0	0	0	0	0	0	0	0	0	0
PCE Adj:	0.00	0.00	0.00	0.00	0.00	0.00	0.00	0.00	0.00	0.00	0.00	0.00
MLF Adj:	0.00	0.00	0.00	0.00	0.00	0.00	0.00	0.00	0.00	0.00	0.00	0.00
FinalVolume:	0	0	0	0	0	0	0	0	0	0	0	0
Saturation Flow Module:												
Sat/Lane:	0	0	0	0	0	0	0	0	0	0	0	0
Adjustment:	1.00	1.00	1.00	1.00	1.00	1.00	1.00	1.00	1.00	1.00	1.00	1.00
Lanes:	0.00	0.00	0.00	0.00	0.00	0.00	0.00	0.00	0.00	0.00	0.00	0.00
Final Sat.:	0	0	0	0	0	0	0	0	0	0	0	0
Capacity Analysis Module:												
Vol/Sat:	0.00	0.00	0.00	0.00	0.00	0.00	0.00	0.00	0.00	0.00	0.00	0.00
Crit Moves:												

Newport Banning Ranch
Year 2016 Cumulative Conditions without Project
AM Peak Hour

Level Of Service Computation Report
ICU 1(Loss as Cycle Length %) Method (Future Volume Alternative)

Intersection #54 Bluff Rd/17th St

Cycle (sec):	100	Critical Vol./Cap.(X):	0.000
Loss Time (sec):	0 (Y+R=4.0 sec)	Average Delay (sec/veh):	xxxxxx
Optimal Cycle:	0	Level Of Service:	

Street Name:	Bluff Road					17th Street					
Approach:	North Bound			South Bound			East Bound			West Bound		
Movement:	L - T - R			L - T - R			L - T - R			L - T - R		
Control:	Permitted			Permitted			Permitted			Permitted		
Rights:	Include			Include			Include			Include		
Min. Green:	0	0	0	0	0	0	0	0	0	0	0	0
Lanes:	1 0 1	1 0		1 0 0	1 0		0 0 1!	0 0		1 0 1	0 1	
Volume Module:												
Base Vol:	0	0	0	0	0	0	0	0	0	0	0	0
Growth Adj:	0.00	0.00	0.00	0.00	0.00	0.00	0.00	0.00	0.00	0.00	0.00	0.00
Initial Bse:	0	0	0	0	0	0	0	0	0	0	0	0
Added Vol:	0	0	0	0	0	0	0	0	0	0	0	0
PasserByVol:	0	0	0	0	0	0	0	0	0	0	0	0
Initial Fut:	0	0	0	0	0	0	0	0	0	0	0	0
User Adj:	0.00	0.00	0.00	0.00	0.00	0.00	0.00	0.00	0.00	0.00	0.00	0.00
PHF Adj:	0.00	0.00	0.00	0.00	0.00	0.00	0.00	0.00	0.00	0.00	0.00	0.00
PHF Volume:	0	0	0	0	0	0	0	0	0	0	0	0
Reduct Vol:	0	0	0	0	0	0	0	0	0	0	0	0
Reduced Vol:	0	0	0	0	0	0	0	0	0	0	0	0
PCE Adj:	0.00	0.00	0.00	0.00	0.00	0.00	0.00	0.00	0.00	0.00	0.00	0.00
MLF Adj:	0.00	0.00	0.00	0.00	0.00	0.00	0.00	0.00	0.00	0.00	0.00	0.00
FinalVolume:	0	0	0	0	0	0	0	0	0	0	0	0
Saturation Flow Module:												
Sat/Lane:	0	0	0	0	0	0	0	0	0	0	0	0
Adjustment:	1.00	1.00	1.00	1.00	1.00	1.00	1.00	1.00	1.00	1.00	1.00	1.00
Lanes:	0.00	0.00	0.00	0.00	0.00	0.00	0.00	0.00	0.00	0.00	0.00	0.00
Final Sat.:	0	0	0	0	0	0	0	0	0	0	0	0
Capacity Analysis Module:												
Vol/Sat:	0.00	0.00	0.00	0.00	0.00	0.00	0.00	0.00	0.00	0.00	0.00	0.00
Crit Moves:												

Newport Banning Ranch
Year 2016 Cumulative Conditions without Project
AM Peak Hour

Level Of Service Computation Report
2000 HCM Unsignalized Method (Future Volume Alternative)

Intersection #55 Bluff Rd/16th St

Average Delay (sec/veh): 0.0 Worst Case Level Of Service: [0.0]

Street Name:	Bluff Road						16th Street					
Approach:	North Bound			South Bound			East Bound			West Bound		
Movement:	L - T - R			L - T - R			L - T - R			L - T - R		
Control:	Uncontrolled			Uncontrolled			Stop Sign			Stop Sign		
Rights:	Include			Include			Include			Include		
Lanes:	1 0 1	1 0		1 0 1	1 0		0 0 1!	0 0		0 0 1!	0 0	
Volume Module:												
Base Vol:	0	0	0	0	0	0	0	0	0	0	0	0
Growth Adj:	0.00	0.00	0.00	0.00	0.00	0.00	0.00	0.00	0.00	0.00	0.00	0.00
Initial Bse:	0	0	0	0	0	0	0	0	0	0	0	0
Added Vol:	0	0	0	0	0	0	0	0	0	0	0	0
PasserByVol:	0	0	0	0	0	0	0	0	0	0	0	0
Initial Fut:	0	0	0	0	0	0	0	0	0	0	0	0
User Adj:	0.00	0.00	0.00	0.00	0.00	0.00	0.00	0.00	0.00	0.00	0.00	0.00
PHF Adj:	0.00	0.00	0.00	0.00	0.00	0.00	0.00	0.00	0.00	0.00	0.00	0.00
PHF Volume:	0	0	0	0	0	0	0	0	0	0	0	0
Reduct Vol:	0	0	0	0	0	0	0	0	0	0	0	0
FinalVolume:	0	0	0	0	0	0	0	0	0	0	0	0
Critical Gap Module:												
Critical Gp:	0.0	0.0	0.0	0.0	0.0	0.0	0.0	0.0	0.0	0.0	0.0	0.0
FollowUpTim:	0.0	0.0	0.0	0.0	0.0	0.0	0.0	0.0	0.0	0.0	0.0	0.0
Capacity Module:												
Cnflict Vol:	0	0	0	0	0	0	0	0	0	0	0	0
Potent Cap.:	0	0	0	0	0	0	0	0	0	0	0	0
Move Cap.:	1	1	1	1	1	1	1	1	1	1	1	1
Volume/Cap:	0.00	0.00	0.00	0.00	0.00	0.00	0.00	0.00	0.00	0.00	0.00	0.00
Level Of Service Module:												
2Way95thQ:	0.0	0.0	0.0	0.0	0.0	0.0	0.0	0.0	0.0	0.0	0.0	0.0
Control Del:	0.0	0.0	0.0	0.0	0.0	0.0	0.0	0.0	0.0	0.0	0.0	0.0
LOS by Move:												
Movement:	LT - LTR - RT			LT - LTR - RT			LT - LTR - RT			LT - LTR - RT		
Shared Cap.:	0	0	0	0	0	0	0	0	0	0	0	0
SharedQueue:	0.0	0.0	0.0	0.0	0.0	0.0	0.0	0.0	0.0	0.0	0.0	0.0
Shrd ConDel:	1.0	1.0	1.0	1.0	1.0	1.0	1.0	1.0	1.0	1.0	1.0	1.0
Shared LOS:												
ApproachDel:	0.0			0.0			0.0			0.0		
ApproachLOS:												

Note: Queue reported is the number of cars per lane.

Newport Banning Ranch
Year 2016 Cumulative Conditions without Project
AM Peak Hour

Level Of Service Computation Report
ICU 1(Loss as Cycle Length %) Method (Future Volume Alternative)

Intersection #56 Bluff Rd/15th St

Cycle (sec):	100	Critical Vol./Cap.(X):	0.000
Loss Time (sec):	0 (Y+R=4.0 sec)	Average Delay (sec/veh):	xxxxxx
Optimal Cycle:	0	Level Of Service:	

Street Name:	Bluff Road						15th Street					
Approach:	North Bound			South Bound			East Bound			West Bound		
Movement:	L - T - R			L - T - R			L - T - R			L - T - R		
Control:	Split Phase			Split Phase			Permitted			Permitted		
Rights:	Include			Include			Include			Include		
Min. Green:	0	0	0	0	0	0	0	0	0	0	0	0
Lanes:	0 0 0 0 0			1 0 0 0 2			2 0 2 0 0			0 0 2 1 0		
Volume Module:												
Base Vol:	0	0	0	0	0	0	0	0	0	0	0	0
Growth Adj:	0.00	0.00	0.00	0.00	0.00	0.00	0.00	0.00	0.00	0.00	0.00	0.00
Initial Bse:	0	0	0	0	0	0	0	0	0	0	0	0
Added Vol:	0	0	0	0	0	0	0	0	0	0	0	0
PasserByVol:	0	0	0	0	0	0	0	0	0	0	0	0
Initial Fut:	0	0	0	0	0	0	0	0	0	0	0	0
User Adj:	0.00	0.00	0.00	0.00	0.00	0.00	0.00	0.00	0.00	0.00	0.00	0.00
PHF Adj:	0.00	0.00	0.00	0.00	0.00	0.00	0.00	0.00	0.00	0.00	0.00	0.00
PHF Volume:	0	0	0	0	0	0	0	0	0	0	0	0
Reduct Vol:	0	0	0	0	0	0	0	0	0	0	0	0
Reduced Vol:	0	0	0	0	0	0	0	0	0	0	0	0
PCE Adj:	0.00	0.00	0.00	0.00	0.00	0.00	0.00	0.00	0.00	0.00	0.00	0.00
MLF Adj:	0.00	0.00	0.00	0.00	0.00	0.00	0.00	0.00	0.00	0.00	0.00	0.00
FinalVolume:	0	0	0	0	0	0	0	0	0	0	0	0
Saturation Flow Module:												
Sat/Lane:	0	0	0	0	0	0	0	0	0	0	0	0
Adjustment:	1.00	1.00	1.00	1.00	1.00	1.00	1.00	1.00	1.00	1.00	1.00	1.00
Lanes:	0.00	0.00	0.00	0.00	0.00	0.00	0.00	0.00	0.00	0.00	0.00	0.00
Final Sat.:	0	0	0	0	0	0	0	0	0	0	0	0
Capacity Analysis Module:												
Vol/Sat:	0.00	0.00	0.00	0.00	0.00	0.00	0.00	0.00	0.00	0.00	0.00	0.00
Crit Moves:												

Newport Banning Ranch
Year 2016 Cumulative Conditions without Project
AM Peak Hour

Level Of Service Computation Report
ICU 1(Loss as Cycle Length %) Method (Future Volume Alternative)

Intersection #57 Bluff Rd/W. Coast Hwy

Cycle (sec):	120	Critical Vol./Cap.(X):	0.657
Loss Time (sec):	0 (Y+R=4.0 sec)	Average Delay (sec/veh):	xxxxxx
Optimal Cycle:	66	Level Of Service:	B

Street Name:	Bluff Road						W. Coast Highway					
Approach:	North Bound			South Bound			East Bound			West Bound		
Movement:	L - T - R			L - T - R			L - T - R			L - T - R		
Control:	Split Phase			Split Phase			Protected			Protected		
Rights:	Include			Include			Include			Include		
Min. Green:	0	0	0	0	0	0	0	0	0	0	0	0
Lanes:	0 0 0 0 0			2 0 0 0 2			2 0 3 0 0			0 0 3 0 1		
Volume Module:												
Base Vol:	0	0	0	0	0	0	0	2834	0	0	1183	0
Growth Adj:	1.00	1.00	1.00	1.00	1.00	1.00	1.00	1.07	1.00	1.00	1.07	1.00
Initial Bse:	0	0	0	0	0	0	0	3038	0	0	1268	0
Added Vol:	0	0	0	1	0	0	0	112	0	0	149	1
PasserByVol:	0	0	0	0	0	0	0	0	0	0	0	0
Initial Fut:	0	0	0	1	0	0	0	3150	0	0	1417	1
User Adj:	1.00	1.00	1.00	1.00	1.00	1.00	1.00	1.00	1.00	1.00	1.00	1.00
PHF Adj:	1.00	1.00	1.00	1.00	1.00	1.00	1.00	1.00	1.00	1.00	1.00	1.00
PHF Volume:	0	0	0	1	0	0	0	3150	0	0	1417	1
Reduct Vol:	0	0	0	0	0	0	0	0	0	0	0	0
Reduced Vol:	0	0	0	1	0	0	0	3150	0	0	1417	1
PCE Adj:	1.00	1.00	1.00	1.00	1.00	1.00	1.00	1.00	1.00	1.00	1.00	1.00
MLF Adj:	1.00	1.00	1.00	1.00	1.00	1.00	1.00	1.00	1.00	1.00	1.00	1.00
FinalVolume:	0	0	0	1	0	0	0	3150	0	0	1417	1
Saturation Flow Module:												
Sat/Lane:	1600	1600	1600	1600	1600	1600	1600	1600	1600	1600	1600	1600
Adjustment:	1.00	1.00	1.00	1.00	1.00	1.00	1.00	1.00	1.00	1.00	1.00	1.00
Lanes:	0.00	0.00	0.00	2.00	0.00	2.00	2.00	3.00	0.00	0.00	3.00	1.00
Final Sat.:	0	0	0	3200	0	3200	3200	4800	0	0	4800	1600
Capacity Analysis Module:												
Vol/Sat:	0.00	0.00	0.00	0.00	0.00	0.00	0.00	0.66	0.00	0.00	0.30	0.00
Crit Moves:				****				****		****		

Newport Banning Ranch
Year 2016 Cumulative Conditions without Project
AM Peak Hour

Level Of Service Computation Report
2000 HCM 4-Way Stop Method (Future Volume Alternative)

Intersection #58 Monrovia Ave/15th Street

Cycle (sec):	100	Critical Vol./Cap.(X):	0.171
Loss Time (sec):	0 (Y+R=4.0 sec)	Average Delay (sec/veh):	7.7
Optimal Cycle:	0	Level Of Service:	A

Street Name:	Monrovia Ave						15th Street					
Approach:	North Bound			South Bound			East Bound			West Bound		
Movement:	L - T - R			L - T - R			L - T - R			L - T - R		
Control:	Stop Sign			Stop Sign			Stop Sign			Stop Sign		
Rights:	Include			Include			Include			Include		
Min. Green:	0	0	0	0	0	0	0	0	0	0	0	0
Lanes:	0 0 0 1 0			0 0 1! 0 0			1 0 0 0 0			0 0 1! 0 0		
Volume Module: >> Count Date: 4 May 2011 << Existing AM Peak Hour												
Base Vol:	0	6	11	113	3	1	1	0	0	5	2	82
Growth Adj:	1.00	1.00	1.00	1.00	1.00	1.00	1.00	1.00	1.00	1.00	1.00	1.00
Initial Bse:	0	6	11	113	3	1	1	0	0	5	2	82
Added Vol:	0	0	0	21	0	0	0	0	0	0	0	45
PasserByVol:	0	0	0	0	0	0	0	0	0	0	0	0
Initial Fut:	0	6	11	134	3	1	1	0	0	5	2	127
User Adj:	1.00	1.00	1.00	1.00	1.00	1.00	1.00	1.00	1.00	1.00	1.00	1.00
PHF Adj:	1.00	1.00	1.00	1.00	1.00	1.00	1.00	1.00	1.00	1.00	1.00	1.00
PHF Volume:	0	6	11	134	3	1	1	0	0	5	2	127
Reduct Vol:	0	0	0	0	0	0	0	0	0	0	0	0
Reduced Vol:	0	6	11	134	3	1	1	0	0	5	2	127
PCE Adj:	1.00	1.00	1.00	1.00	1.00	1.00	1.00	1.00	1.00	1.00	1.00	1.00
MLF Adj:	1.00	1.00	1.00	1.00	1.00	1.00	1.00	1.00	1.00	1.00	1.00	1.00
FinalVolume:	0	6	11	134	3	1	1	0	0	5	2	127
Saturation Flow Module:												
Adjustment:	1.00	1.00	1.00	1.00	1.00	1.00	1.00	1.00	1.00	1.00	1.00	1.00
Lanes:	0.00	0.35	0.65	0.97	0.02	0.01	1.00	0.00	0.00	0.04	0.01	0.95
Final Sat.:	0	313	573	782	18	6	761	0	0	35	14	896
Capacity Analysis Module:												
Vol/Sat:	xxxx	0.02	0.02	0.17	0.17	0.17	0.00	xxxx	xxxx	0.14	0.14	0.14
Crit Moves:		****			****		****			****		
Delay/Veh:	0.0	7.0	7.0	8.2	8.2	8.2	7.6	0.0	0.0	7.3	7.3	7.3
Delay Adj:	1.00	1.00	1.00	1.00	1.00	1.00	1.00	1.00	1.00	1.00	1.00	1.00
AdjDel/Veh:	0.0	7.0	7.0	8.2	8.2	8.2	7.6	0.0	0.0	7.3	7.3	7.3
LOS by Move:	*	A	A	A	A	A	A	*	*	A	A	A
ApproachDel:		7.0			8.2			7.6			7.3	
Delay Adj:		1.00			1.00			1.00			1.00	
ApprAdjDel:		7.0			8.2			7.6			7.3	
LOS by Appr:		A			A			A			A	
AllWayAvgQ:	0.0	0.0	0.0	0.2	0.2	0.2	0.0	0.0	0.0	0.2	0.2	0.2

Newport Banning Ranch
Year 2016 Cumulative Conditions without Project
AM Peak Hour

Note: Queue reported is the number of cars per lane.

Newport Banning Ranch
Year 2016 Cumulative Conditions without Project
AM Peak Hour

Level Of Service Computation Report
ICU 1(Loss as Cycle Length %) Method (Future Volume Alternative)

Intersection #100 Pomona Ave/16th St

Cycle (sec):	100	Critical Vol./Cap.(X):	0.027
Loss Time (sec):	0 (Y+R=4.0 sec)	Average Delay (sec/veh):	xxxxxx
Optimal Cycle:	15	Level Of Service:	A

Street Name:	Pomona Avenue						16th Street					
Approach:	North Bound			South Bound			East Bound			West Bound		
Movement:	L - T - R			L - T - R			L - T - R			L - T - R		
Control:	Permitted			Permitted			Permitted			Permitted		
Rights:	Include			Include			Include			Include		
Min. Green:	0	0	0	0	0	0	0	0	0	0	0	0
Lanes:	0 0 0 0 0			1 0 0 1 0			1 0 0 1 0			0 0 0 1 0		
Volume Module:												
Base Vol:	0	0	0	37	30	11	0	-200	0	0	-200	0
Growth Adj:	1.07	1.07	1.07	1.07	1.07	1.07	1.07	1.07	1.07	1.07	1.07	1.07
Initial Bse:	0	0	0	40	32	12	0	-214	0	0	-214	0
Added Vol:	0	0	0	0	0	0	0	10	0	0	20	0
PasserByVol:	0	0	0	0	0	0	0	0	0	0	0	0
Initial Fut:	0	0	0	40	32	12	0	-204	0	0	-194	0
User Adj:	1.00	1.00	1.00	1.00	1.00	1.00	1.00	0.00	1.00	1.00	0.00	1.00
PHF Adj:	1.00	1.00	1.00	1.00	1.00	1.00	1.00	0.00	1.00	1.00	0.00	1.00
PHF Volume:	0	0	0	40	32	12	0	0	0	0	0	0
Reduct Vol:	0	0	0	0	0	0	0	0	0	0	0	0
Reduced Vol:	0	0	0	40	32	12	0	0	0	0	0	0
PCE Adj:	1.00	1.00	1.00	1.00	1.00	1.00	1.00	0.00	1.00	1.00	0.00	1.00
MLF Adj:	1.00	1.00	1.00	1.00	1.00	1.00	1.00	0.00	1.00	1.00	0.00	1.00
FinalVolume:	0	0	0	40	32	12	0	0	0	0	0	0
Saturation Flow Module:												
Sat/Lane:	1600	1600	1600	1600	1600	1600	1600	1600	1600	1600	1600	1600
Adjustment:	1.00	1.00	1.00	1.00	1.00	1.00	1.00	1.00	1.00	1.00	1.00	1.00
Lanes:	0.00	0.00	0.00	1.00	0.73	0.27	1.00	1.00	0.00	0.00	1.00	0.00
Final Sat.:	0	0	0	1600	1171	429	1600	1600	0	0	1600	0
Capacity Analysis Module:												
Vol/Sat:	0.00	0.00	0.00	0.02	0.03	0.03	0.00	0.00	0.00	0.00	0.00	0.00
Crit Moves:					****							

Newport Banning Ranch
Year 2016 Cumulative Conditions without Project
PM Peak Hour

Scenario Report

Scenario:	CEQA 2016 w/o Project PM ICU
Command:	CEQA 2016 w/o Project PM ICU
Volume:	Ex+Comm No Proj PM
Geometry:	Existing ICU
Impact Fee:	Default Impact Fee
Trip Generation:	Cumulative PM
Trip Distribution:	Cumulative
Paths:	None
Routes:	Default Route
Configuration:	2016 ICU

Newport Banning Ranch
Year 2016 Cumulative Conditions without Project
PM Peak Hour

Level Of Service Computation Report
2000 HCM 4-Way Stop Method (Future Volume Alternative)

Intersection #1 Monrovia Ave/16th St

Cycle (sec):	100	Critical Vol./Cap.(X):	0.208
Loss Time (sec):	0 (Y+R=4.0 sec)	Average Delay (sec/veh):	8.6
Optimal Cycle:	0	Level Of Service:	A

Street Name:	Monrovia Avenue						16th Street					
Approach:	North Bound			South Bound			East Bound			West Bound		
Movement:	L -	T -	R	L -	T -	R	L -	T -	R	L -	T -	R
Control:	Stop Sign			Stop Sign			Stop Sign			Stop Sign		
Rights:	Include			Include			Include			Include		
Min. Green:	0	0	0	0	0	0	0	0	0	0	0	0
Lanes:	0 0	1! 0	0	0 0	1! 0	0	0 0	1! 0	0	0 0	1! 0	0
Volume Module:												
Base Vol:	8	73	23	29	95	17	37	70	21	18	23	31
Growth Adj:	1.00	1.00	1.00	1.00	1.00	1.00	1.00	1.00	1.00	1.00	1.00	1.00
Initial Bse:	8	73	23	29	95	17	37	70	21	18	23	31
Added Vol:	0	5	22	4	9	0	0	0	0	53	0	3
Committed P:	0	0	0	0	0	0	0	0	0	0	0	0
Initial Fut:	8	78	45	33	104	17	37	70	21	71	23	34
User Adj:	1.00	1.00	1.00	1.00	1.00	1.00	1.00	1.00	1.00	1.00	1.00	1.00
PHF Adj:	1.00	1.00	1.00	1.00	1.00	1.00	1.00	1.00	1.00	1.00	1.00	1.00
PHF Volume:	8	78	45	33	104	17	37	70	21	71	23	34
Reduct Vol:	0	0	0	0	0	0	0	0	0	0	0	0
Reduced Vol:	8	78	45	33	104	17	37	70	21	71	23	34
PCE Adj:	1.00	1.00	1.00	1.00	1.00	1.00	1.00	1.00	1.00	1.00	1.00	1.00
MLF Adj:	1.00	1.00	1.00	1.00	1.00	1.00	1.00	1.00	1.00	1.00	1.00	1.00
FinalVolume:	8	78	45	33	104	17	37	70	21	71	23	34
Saturation Flow Module:												
Adjustment:	1.00	1.00	1.00	1.00	1.00	1.00	1.00	1.00	1.00	1.00	1.00	1.00
Lanes:	0.06	0.60	0.34	0.21	0.68	0.11	0.29	0.55	0.16	0.55	0.18	0.27
Final Sat.:	47	454	262	159	501	82	212	400	120	407	132	195
Capacity Analysis Module:												
Vol/Sat:	0.17	0.17	0.17	0.21	0.21	0.21	0.17	0.17	0.17	0.17	0.17	0.17
Crit Moves:	****			****			****			****		
Delay/Veh:	8.3	8.3	8.3	8.7	8.7	8.7	8.6	8.6	8.6	8.6	8.6	8.6
Delay Adj:	1.00	1.00	1.00	1.00	1.00	1.00	1.00	1.00	1.00	1.00	1.00	1.00
AdjDel/Veh:	8.3	8.3	8.3	8.7	8.7	8.7	8.6	8.6	8.6	8.6	8.6	8.6
LOS by Move:	A	A	A	A	A	A	A	A	A	A	A	A
ApproachDel:	8.3			8.7			8.6			8.6		
Delay Adj:	1.00			1.00			1.00			1.00		
ApprAdjDel:	8.3			8.7			8.6			8.6		
LOS by Appr:	A			A			A			A		
AllWayAvgQ:	0.2	0.2	0.2	0.2	0.2	0.2	0.2	0.2	0.2	0.2	0.2	0.2

Newport Banning Ranch
Year 2016 Cumulative Conditions without Project
PM Peak Hour

Note: Queue reported is the number of cars per lane.

Newport Banning Ranch
Year 2016 Cumulative Conditions without Project
PM Peak Hour

Level Of Service Computation Report
ICU 1(Loss as Cycle Length %) Method (Future Volume Alternative)

Intersection #2 Placentia Ave/15th St

Cycle (sec):	100	Critical Vol./Cap.(X):	0.384
Loss Time (sec):	0 (Y+R=4.0 sec)	Average Delay (sec/veh):	xxxxxx
Optimal Cycle:	37	Level Of Service:	A

Street Name:	Placentia Ave						15th Street					
Approach:	North Bound			South Bound			East Bound			West Bound		
Movement:	L - T - R			L - T - R			L - T - R			L - T - R		
Control:	Prot+Permit			Prot+Permit			Split Phase			Split Phase		
Rights:	Include			Include			Include			Include		
Min. Green:	0	0	0	0	0	0	0	0	0	0	0	0
Lanes:	1 0 1	1 0		1 0 1	1 0		0 0 1!	0 0		0 1 0	0 1	
Volume Module:												
Base Vol:	71	440	17	14	394	30	27	23	132	10	48	84
Growth Adj:	1.00	1.00	1.00	1.00	1.00	1.00	1.00	1.00	1.00	1.00	1.00	1.00
Initial Bse:	71	440	17	14	394	30	27	23	132	10	48	84
Added Vol:	31	31	0	0	12	6	3	0	16	0	0	0
Committed P:	0	32	0	0	12	0	0	0	0	0	0	0
Initial Fut:	102	503	17	14	418	36	30	23	148	10	48	84
User Adj:	1.00	1.00	1.00	1.00	1.00	1.00	1.00	1.00	1.00	1.00	1.00	1.00
PHF Adj:	1.00	1.00	1.00	1.00	1.00	1.00	1.00	1.00	1.00	1.00	1.00	1.00
PHF Volume:	102	503	17	14	418	36	30	23	148	10	48	84
Reduct Vol:	0	0	0	0	0	0	0	0	0	0	0	0
Reduced Vol:	102	503	17	14	418	36	30	23	148	10	48	84
PCE Adj:	1.00	1.00	1.00	1.00	1.00	1.00	1.00	1.00	1.00	1.00	1.00	1.00
MLF Adj:	1.00	1.00	1.00	1.00	1.00	1.00	1.00	1.00	1.00	1.00	1.00	1.00
FinalVolume:	102	503	17	14	418	36	30	23	148	10	48	84
Saturation Flow Module:												
Sat/Lane:	1600	1600	1600	1600	1600	1600	1600	1600	1600	1600	1600	1600
Adjustment:	1.00	1.00	1.00	1.00	1.00	1.00	1.00	1.00	1.00	1.00	1.00	1.00
Lanes:	1.00	1.93	0.07	1.00	1.84	0.16	0.15	0.11	0.74	0.17	0.83	1.00
Final Sat.:	1600	3095	105	1600	2946	254	239	183	1178	276	1324	1600
Capacity Analysis Module:												
Vol/Sat:	0.06	0.16	0.16	0.01	0.14	0.14	0.13	0.13	0.13	0.04	0.04	0.05
Crit Moves:	****				****				****			****

Newport Banning Ranch
Year 2016 Cumulative Conditions without Project
PM Peak Hour

Level Of Service Computation Report
2000 HCM Unsignalized Method (Future Volume Alternative)

Intersection #3 Superior Ave/15th St

Average Delay (sec/veh): 1.2 Worst Case Level Of Service: D[28.8]

Street Name:	Superior Avenue						15th Street					
Approach:	North Bound			South Bound			East Bound			West Bound		
Movement:	L - T - R			L - T - R			L - T - R			L - T - R		
Control:	Uncontrolled			Uncontrolled			Stop Sign			Stop Sign		
Rights:	Include			Include			Include			Include		
Lanes:	1 0 2 0 0			0 0 1 1 0			1 0 0 0 1			0 0 0 0 0		
Volume Module:												
Base Vol:	35	593	0	0	786	92	35	0	24	0	0	0
Growth Adj:	1.00	1.00	1.00	1.00	1.00	1.00	1.00	1.00	1.00	1.00	1.00	1.00
Initial Bse:	35	593	0	0	786	92	35	0	24	0	0	0
Added Vol:	0	10	0	0	12	0	0	0	0	0	0	0
Committed P:	0	40	0	0	124	0	0	0	0	0	0	0
Initial Fut:	35	643	0	0	922	92	35	0	24	0	0	0
User Adj:	1.00	1.00	1.00	1.00	1.00	1.00	1.00	1.00	1.00	1.00	1.00	1.00
PHF Adj:	1.00	1.00	1.00	1.00	1.00	1.00	1.00	1.00	1.00	1.00	1.00	1.00
PHF Volume:	35	643	0	0	922	92	35	0	24	0	0	0
Reduct Vol:	0	0	0	0	0	0	0	0	0	0	0	0
FinalVolume:	35	643	0	0	922	92	35	0	24	0	0	0
Critical Gap Module:												
Critical Gp:	4.1	xxxx	xxxxx	xxxxx	xxxx	xxxxx	6.8	xxxx	6.9	xxxxx	xxxx	xxxxx
FollowUpTim:	2.2	xxxx	xxxxx	xxxxx	xxxx	xxxxx	3.5	xxxx	3.3	xxxxx	xxxx	xxxxx
Capacity Module:												
Cnflict Vol:	1014	xxxx	xxxxx	xxxx	xxxx	xxxxx	1360	xxxx	507	xxxx	xxxx	xxxxx
Potent Cap.:	692	xxxx	xxxxx	xxxx	xxxx	xxxxx	142	xxxx	516	xxxx	xxxx	xxxxx
Move Cap.:	692	xxxx	xxxxx	xxxx	xxxx	xxxxx	137	xxxx	516	xxxx	xxxx	xxxxx
Volume/Cap:	0.05	xxxx	xxxx	xxxx	xxxx	xxxx	0.26	xxxx	0.05	xxxx	xxxx	xxxx
Level Of Service Module:												
2Way95thQ:	0.2	xxxx	xxxxx	xxxx	xxxx	xxxxx	1.0	xxxx	0.1	xxxx	xxxx	xxxxx
Control Del:	10.5	xxxx	xxxxx	xxxxx	xxxx	xxxxx	40.2	xxxx	12.3	xxxxx	xxxx	xxxxx
LOS by Move:	B	*	*	*	*	*	E	*	B	*	*	*
Movement:	LT - LTR - RT			LT - LTR - RT			LT - LTR - RT			LT - LTR - RT		
Shared Cap.:	xxxx	xxxx	xxxxx	xxxx	xxxx	xxxxx	xxxx	xxxx	xxxxx	xxxx	xxxx	xxxxx
SharedQueue:	xxxxx	xxxx	xxxxx	xxxxx	xxxx	xxxxx	xxxxx	xxxx	xxxxx	xxxxx	xxxx	xxxxx
Shrd ConDel:	xxxxx	xxxx	xxxxx	xxxxx	xxxx	xxxxx	xxxxx	xxxx	xxxxx	xxxxx	xxxx	xxxxx
Shared LOS:	*	*	*	*	*	*	*	*	*	*	*	*
ApproachDel:	xxxxxx			xxxxxx			28.8			xxxxxx		
ApproachLOS:	*			*			D			*		

Note: Queue reported is the number of cars per lane.

Newport Banning Ranch
Year 2016 Cumulative Conditions without Project
PM Peak Hour

Level Of Service Computation Report
ICU 1(Loss as Cycle Length %) Method (Future Volume Alternative)

Intersection #4 Superior Ave/Placentia Ave

Cycle (sec):	100	Critical Vol./Cap.(X):	0.659
Loss Time (sec):	0 (Y+R=4.0 sec)	Average Delay (sec/veh):	xxxxxx
Optimal Cycle:	55	Level Of Service:	B

Street Name:	Superior Avenue						Placentia Avenue					
Approach:	North Bound			South Bound			East Bound			West Bound		
Movement:	L - T - R			L - T - R			L - T - R			L - T - R		
Control:	Protected			Protected			Permitted			Permitted		
Rights:	Include			Include			Include			Include		
Min. Green:	0	0	0	0	0	0	0	0	0	0	0	0
Lanes:	1 0 1	1 0		1 0 1	1 0		1 0 1	0 1		0 1 0	1 0	
Volume Module:												
Base Vol:	224	419	22	57	664	11	11	166	316	41	287	86
Growth Adj:	1.00	1.00	1.00	1.00	1.00	1.00	1.00	1.00	1.00	1.00	1.00	1.00
Initial Bse:	224	419	22	57	664	11	11	166	316	41	287	86
Added Vol:	62	10	0	0	12	0	0	0	27	0	0	0
Committed P:	0	40	0	55	69	0	0	2	0	6	32	0
Initial Fut:	286	469	22	112	745	11	11	168	343	47	319	86
User Adj:	1.00	1.00	1.00	1.00	1.00	1.00	1.00	1.00	1.00	1.00	1.00	1.00
PHF Adj:	1.00	1.00	1.00	1.00	1.00	1.00	1.00	1.00	1.00	1.00	1.00	1.00
PHF Volume:	286	469	22	112	745	11	11	168	343	47	319	86
Reduct Vol:	0	0	0	0	0	0	0	0	0	0	0	0
Reduced Vol:	286	469	22	112	745	11	11	168	343	47	319	86
PCE Adj:	1.00	1.00	1.00	1.00	1.00	1.00	1.00	1.00	1.00	1.00	1.00	1.00
MLF Adj:	1.00	1.00	1.00	1.00	1.00	1.00	1.00	1.00	1.00	1.00	1.00	1.00
FinalVolume:	286	469	22	112	745	11	11	168	343	47	319	86
Saturation Flow Module:												
Sat/Lane:	1600	1600	1600	1600	1600	1600	1600	1600	1600	1600	1600	1600
Adjustment:	1.00	1.00	1.00	1.00	1.00	1.00	1.00	1.00	1.00	1.00	1.00	1.00
Lanes:	1.00	1.91	0.09	1.00	1.97	0.03	1.00	1.00	1.00	0.21	1.41	0.38
Final Sat.:	1600	3057	143	1600	3153	47	1600	1600	1600	333	2258	609
Capacity Analysis Module:												
Vol/Sat:	0.18	0.15	0.15	0.07	0.24	0.24	0.01	0.11	0.21	0.03	0.14	0.14
Crit Moves:	****				****				****	****		

Newport Banning Ranch
Year 2016 Cumulative Conditions without Project
PM Peak Hour

Level Of Service Computation Report
ICU 1(Loss as Cycle Length %) Method (Future Volume Alternative)

Intersection #5 Hospital Rd/Newport Blvd

Cycle (sec):	120	Critical Vol./Cap.(X):	0.647
Loss Time (sec):	0 (Y+R=4.0 sec)	Average Delay (sec/veh):	xxxxxx
Optimal Cycle:	65	Level Of Service:	B

Street Name:	Newport Boulevard						Hospital Road					
Approach:	North Bound			South Bound			East Bound			West Bound		
Movement:	L - T - R			L - T - R			L - T - R			L - T - R		
Control:	Protected			Protected			Protected			Protected		
Rights:	Include			Include			Include			Include		
Min. Green:	0	0	0	0	0	0	0	0	0	0	0	0
Lanes:	1 0 3 0 1			1 0 3 0 1			2 0 1 0 1			1 0 1 1 0		
Volume Module:												
Base Vol:	117	1215	55	48	1513	205	293	135	187	121	178	38
Growth Adj:	1.00	1.00	1.00	1.00	1.00	1.00	1.00	1.00	1.00	1.00	1.00	1.00
Initial Bse:	117	1215	55	48	1513	205	293	135	187	121	178	38
Added Vol:	5	18	12	5	15	0	0	1	2	7	2	14
Committed P:	26	69	0	0	62	6	19	0	41	0	0	0
Initial Fut:	148	1302	67	53	1590	211	312	136	230	128	180	52
User Adj:	1.00	1.00	1.00	1.00	1.00	1.00	1.00	1.00	1.00	1.00	1.00	1.00
PHF Adj:	1.00	1.00	1.00	1.00	1.00	1.00	1.00	1.00	1.00	1.00	1.00	1.00
PHF Volume:	148	1302	67	53	1590	211	312	136	230	128	180	52
Reduct Vol:	0	0	0	0	0	0	0	0	0	0	0	0
Reduced Vol:	148	1302	67	53	1590	211	312	136	230	128	180	52
PCE Adj:	1.00	1.00	1.00	1.00	1.00	1.00	1.00	1.00	1.00	1.00	1.00	1.00
MLF Adj:	1.00	1.00	1.00	1.00	1.00	1.00	1.00	1.00	1.00	1.00	1.00	1.00
FinalVolume:	148	1302	67	53	1590	211	312	136	230	128	180	52
Saturation Flow Module:												
Sat/Lane:	1600	1600	1600	1600	1600	1600	1600	1600	1600	1600	1600	1600
Adjustment:	1.00	1.00	1.00	1.00	1.00	1.00	1.00	1.00	1.00	1.00	1.00	1.00
Lanes:	1.00	3.00	1.00	1.00	3.00	1.00	2.00	1.00	1.00	1.00	1.55	0.45
Final Sat.:	1600	4800	1600	1600	4800	1600	3200	1600	1600	1600	2483	717
Capacity Analysis Module:												
Vol/Sat:	0.09	0.27	0.04	0.03	0.33	0.13	0.10	0.09	0.14	0.08	0.07	0.07
Crit Moves:	****				****				****	****		

Newport Banning Ranch
Year 2016 Cumulative Conditions without Project
PM Peak Hour

Level Of Service Computation Report
ICU 1(Loss as Cycle Length %) Method (Future Volume Alternative)

Intersection #6 Orange St/W. Coast Hwy

Cycle (sec):	120	Critical Vol./Cap.(X):	0.757
Loss Time (sec):	0 (Y+R=4.0 sec)	Average Delay (sec/veh):	xxxxxx
Optimal Cycle:	76	Level Of Service:	C

Street Name:	Orange Street						W. Coast Highway					
Approach:	North Bound			South Bound			East Bound			West Bound		
Movement:	L - T - R			L - T - R			L - T - R			L - T - R		
Control:	Permitted			Permitted			Protected			Protected		
Rights:	Include			Include			Include			Include		
Min. Green:	0	0	0	0	0	0	0	0	0	0	0	0
Lanes:	0 1	0 0	1	0 1	0 0	1	1 0	2 1	0	1 0	3 0	1
Volume Module:												
Base Vol:	37	8	29	32	2	18	44	1170	19	53	2788	26
Growth Adj:	1.00	1.00	1.00	1.00	1.00	1.00	1.07	1.07	1.07	1.07	1.07	1.07
Initial Bse:	37	8	29	32	2	18	47	1254	20	57	2989	28
Added Vol:	0	0	0	0	0	6	6	189	0	0	157	0
Committed P:	0	0	0	0	0	0	0	56	0	0	95	0
Initial Fut:	37	8	29	32	2	24	53	1499	20	57	3241	28
User Adj:	1.00	1.00	1.00	1.00	1.00	1.00	1.00	1.00	1.00	1.00	1.00	1.00
PHF Adj:	1.00	1.00	1.00	1.00	1.00	1.00	1.00	1.00	1.00	1.00	1.00	1.00
PHF Volume:	37	8	29	32	2	24	53	1499	20	57	3241	28
Reduct Vol:	0	0	0	0	0	0	0	0	0	0	0	0
Reduced Vol:	37	8	29	32	2	24	53	1499	20	57	3241	28
PCE Adj:	1.00	1.00	1.00	1.00	1.00	1.00	1.00	1.00	1.00	1.00	1.00	1.00
MLF Adj:	1.00	1.00	1.00	1.00	1.00	1.00	1.00	1.00	1.00	1.00	1.00	1.00
FinalVolume:	37	8	29	32	2	24	53	1499	20	57	3241	28
Saturation Flow Module:												
Sat/Lane:	1600	1600	1600	1600	1600	1600	1600	1600	1600	1600	1600	1600
Adjustment:	1.00	1.00	1.00	1.00	1.00	1.00	1.00	1.00	1.00	1.00	1.00	1.00
Lanes:	0.82	0.18	1.00	0.94	0.06	1.00	1.00	2.96	0.04	1.00	3.00	1.00
Final Sat.:	1316	284	1600	1506	94	1600	1600	4736	64	1600	4800	1600
Capacity Analysis Module:												
Vol/Sat:	0.02	0.03	0.02	0.02	0.02	0.02	0.03	0.32	0.32	0.04	0.68	0.02
Crit Moves:		****		****			****				****	

Newport Banning Ranch
Year 2016 Cumulative Conditions without Project
PM Peak Hour

Level Of Service Computation Report
ICU 1(Loss as Cycle Length %) Method (Future Volume Alternative)

Intersection #7 Prospect St/W. Coast Hwy

Cycle (sec):	120	Critical Vol./Cap.(X):	0.763
Loss Time (sec):	0 (Y+R=4.0 sec)	Average Delay (sec/veh):	xxxxxx
Optimal Cycle:	78	Level Of Service:	C

Street Name:	Prospect Street						W. Coast Highway					
Approach:	North Bound			South Bound			East Bound			West Bound		
Movement:	L - T - R			L - T - R			L - T - R			L - T - R		
Control:	Permitted			Permitted			Protected			Protected		
Rights:	Include			Include			Include			Include		
Min. Green:	0	0	0	0	0	0	0	0	0	0	0	0
Lanes:	0 1	0 0	1	0 0	1!	0 0	1 0	2 1	0	1 0	2 1	0
Volume Module:												
Base Vol:	21	0	28	88	1	8	16	1279	10	23	2645	132
Growth Adj:	1.00	1.00	1.00	1.00	1.00	1.00	1.07	1.07	1.07	1.07	1.07	1.07
Initial Bse:	21	0	28	88	1	8	17	1371	11	25	2835	142
Added Vol:	0	0	0	7	0	3	3	186	0	0	154	6
Committed P:	0	0	0	0	0	0	0	56	0	0	95	0
Initial Fut:	21	0	28	95	1	11	20	1613	11	25	3084	148
User Adj:	1.00	1.00	1.00	1.00	1.00	1.00	1.00	1.00	1.00	1.00	1.00	1.00
PHF Adj:	1.00	1.00	1.00	1.00	1.00	1.00	1.00	1.00	1.00	1.00	1.00	1.00
PHF Volume:	21	0	28	95	1	11	20	1613	11	25	3084	148
Reduct Vol:	0	0	0	0	0	0	0	0	0	0	0	0
Reduced Vol:	21	0	28	95	1	11	20	1613	11	25	3084	148
PCE Adj:	1.00	1.00	1.00	1.00	1.00	1.00	1.00	1.00	1.00	1.00	1.00	1.00
MLF Adj:	1.00	1.00	1.00	1.00	1.00	1.00	1.00	1.00	1.00	1.00	1.00	1.00
FinalVolume:	21	0	28	95	1	11	20	1613	11	25	3084	148
Saturation Flow Module:												
Sat/Lane:	1600	1600	1600	1600	1600	1600	1600	1600	1600	1600	1600	1600
Adjustment:	1.00	1.00	1.00	1.00	1.00	1.00	1.00	1.00	1.00	1.00	1.00	1.00
Lanes:	1.00	0.00	1.00	0.89	0.01	0.10	1.00	2.98	0.02	1.00	2.86	0.14
Final Sat.:	1600	0	1600	1421	15	164	1600	4768	32	1600	4581	219
Capacity Analysis Module:												
Vol/Sat:	0.01	0.00	0.02	0.06	0.07	0.07	0.01	0.34	0.34	0.02	0.67	0.67
Crit Moves:			****	****			****				****	

Newport Banning Ranch
Year 2016 Cumulative Conditions without Project
PM Peak Hour

Level Of Service Computation Report
ICU 1(Loss as Cycle Length %) Method (Future Volume Alternative)

Intersection #8 W. Coast Hwy/Superior Ave

Cycle (sec):	120	Critical Vol./Cap.(X):	0.741
Loss Time (sec):	0 (Y+R=4.0 sec)	Average Delay (sec/veh):	xxxxxx
Optimal Cycle:	88	Level Of Service:	C

Street Name:	Superior Avenue						W. Coast Highway					
Approach:	North Bound			South Bound			East Bound			West Bound		
Movement:	L - T - R			L - T - R			L - T - R			L - T - R		
Control:	Split Phase			Split Phase			Protected			Protected		
Rights:	Include			Ovl			Include			Include		
Min. Green:	0	0	0	0	0	0	0	0	0	0	0	0
Lanes:	1 1 0	1 0		1 1 1	0 2		2 0 3	0 1		1 0 3	1 0	
Volume Module:												
Base Vol:	254	208	78	228	243	710	258	986	243	226	1854	162
Growth Adj:	1.00	1.00	1.00	1.00	1.00	1.00	1.07	1.07	1.07	1.07	1.07	1.07
Initial Bse:	254	208	78	228	243	710	277	1057	260	242	1987	174
Added Vol:	17	0	0	13	0	24	34	152	16	0	145	32
Committed P:	0	8	1	0	14	55	32	36	3	0	67	0
Initial Fut:	271	216	79	241	257	789	343	1245	279	242	2199	206
User Adj:	1.00	1.00	1.00	1.00	1.00	1.00	1.00	1.00	1.00	1.00	1.00	1.00
PHF Adj:	1.00	1.00	1.00	1.00	1.00	1.00	1.00	1.00	1.00	1.00	1.00	1.00
PHF Volume:	271	216	79	241	257	789	343	1245	279	242	2199	206
Reduct Vol:	0	0	0	0	0	0	0	0	0	0	0	0
Reduced Vol:	271	216	79	241	257	789	343	1245	279	242	2199	206
PCE Adj:	1.00	1.00	1.00	1.00	1.00	1.00	1.00	1.00	1.00	1.00	1.00	1.00
MLF Adj:	1.00	1.00	1.00	1.00	1.00	1.00	1.00	1.00	1.00	1.00	1.00	1.00
FinalVolume:	271	216	79	241	257	789	343	1245	279	242	2199	206
OvlAdjVol:						446						
Saturation Flow Module:												
Sat/Lane:	1600	1600	1600	1600	1600	1600	1600	1600	1600	1600	1600	1600
Adjustment:	1.00	1.00	1.00	1.00	1.00	1.00	1.00	1.00	1.00	1.00	1.00	1.00
Lanes:	1.44	1.14	0.42	1.45	1.55	2.00	2.00	3.00	1.00	1.00	3.66	0.34
Final Sat.:	2301	1831	668	2323	2477	3200	3200	4800	1600	1600	5853	547
Capacity Analysis Module:												
Vol/Sat:	0.12	0.12	0.12	0.10	0.10	0.25	0.11	0.26	0.17	0.15	0.38	0.38
OvlAdjV/S:						0.14						
Crit Moves:			****			****	****				****	

Newport Banning Ranch
Year 2016 Cumulative Conditions without Project
PM Peak Hour

Level Of Service Computation Report
ICU 1(Loss as Cycle Length %) Method (Future Volume Alternative)

Intersection #9 Newport Blvd/W. Coast Hwy

Cycle (sec):	120	Critical Vol./Cap.(X):	0.763
Loss Time (sec):	0 (Y+R=4.0 sec)	Average Delay (sec/veh):	xxxxxx
Optimal Cycle:	96	Level Of Service:	C

Street Name:	Newport Boulevard						W. Coast Highway					
Approach:	North Bound			South Bound			East Bound			West Bound		
Movement:	L - T - R			L - T - R			L - T - R			L - T - R		
Control:	Protected			Protected			Protected			Protected		
Rights:	Include			Include			Ignore			Ignore		
Min. Green:	0	0	0	0	0	0	0	0	0	0	0	0
Lanes:	0 0 0 0 0			2 0 0 0 1			0 0 2 0 1			0 0 3 0 1		
Volume Module:												
Base Vol:	0	0	0	586	0	393	0	1261	159	0	1823	487
Growth Adj:	1.00	1.00	1.00	1.00	1.00	1.00	1.00	1.07	1.07	1.00	1.07	1.07
Initial Bse:	0	0	0	586	0	393	0	1352	170	0	1954	522
Added Vol:	0	0	0	21	0	13	0	165	0	0	164	13
Committed P:	0	0	0	44	0	19	0	76	7	0	26	0
Initial Fut:	0	0	0	651	0	425	0	1593	177	0	2144	535
User Adj:	1.00	1.00	1.00	1.00	1.00	1.00	1.00	1.00	0.00	1.00	1.00	0.00
PHF Adj:	1.00	1.00	1.00	1.00	1.00	1.00	1.00	1.00	0.00	1.00	1.00	0.00
PHF Volume:	0	0	0	651	0	425	0	1593	0	0	2144	0
Reduct Vol:	0	0	0	0	0	0	0	0	0	0	0	0
Reduced Vol:	0	0	0	651	0	425	0	1593	0	0	2144	0
PCE Adj:	1.00	1.00	1.00	1.00	1.00	1.00	1.00	1.00	0.00	1.00	1.00	0.00
MLF Adj:	1.00	1.00	1.00	1.00	1.00	1.00	1.00	1.00	0.00	1.00	1.00	0.00
FinalVolume:	0	0	0	651	0	425	0	1593	0	0	2144	0
Saturation Flow Module:												
Sat/Lane:	1600	1600	1600	1600	1600	1600	1600	1600	1600	1600	1600	1600
Adjustment:	1.00	1.00	1.00	1.00	1.00	1.00	1.00	1.00	1.00	1.00	1.00	1.00
Lanes:	0.00	0.00	0.00	2.00	0.00	1.00	0.00	2.00	1.00	0.00	3.00	1.00
Final Sat.:	0	0	0	3200	0	1600	0	3200	1600	0	4800	1600
Capacity Analysis Module:												
Vol/Sat:	0.00	0.00	0.00	0.20	0.00	0.27	0.00	0.50	0.00	0.00	0.45	0.00
Crit Moves:						****		****		****		

Newport Banning Ranch
Year 2016 Cumulative Conditions without Project
PM Peak Hour

Level Of Service Computation Report
ICU 1(Loss as Cycle Length %) Method (Future Volume Alternative)

Intersection #10 Riverside Ave/W. Coast Hwy

Cycle (sec):	120	Critical Vol./Cap.(X):	0.815
Loss Time (sec):	0 (Y+R=4.0 sec)	Average Delay (sec/veh):	xxxxxx
Optimal Cycle:	100	Level Of Service:	D

Street Name:	Riverside Avenue						W. Coast Highway					
Approach:	North Bound			South Bound			East Bound			West Bound		
Movement:	L - T - R			L - T - R			L - T - R			L - T - R		
Control:	Permitted			Permitted			Protected			Protected		
Rights:	Include			Ovl			Include			Include		
Min. Green:	0	0	0	0	0	0	0	0	0	0	0	0
Lanes:	0 0	1! 0	0	0 1	0 0	1	1 0	1 1	0	1 0	3 0	1
Volume Module:												
Base Vol:	10	11	2	98	2	404	244	1373	5	11	2155	70
Growth Adj:	1.00	1.00	1.00	1.00	1.00	1.00	1.07	1.07	1.07	1.07	1.07	1.07
Initial Bse:	10	11	2	98	2	404	262	1472	5	12	2310	75
Added Vol:	0	0	0	0	0	10	11	182	0	0	189	0
Committed P:	0	0	0	2	0	0	0	138	0	0	139	3
Initial Fut:	10	11	2	100	2	414	273	1792	5	12	2638	78
User Adj:	1.00	1.00	1.00	1.00	1.00	1.00	1.00	1.00	1.00	1.00	1.00	1.00
PHF Adj:	1.00	1.00	1.00	1.00	1.00	1.00	1.00	1.00	1.00	1.00	1.00	1.00
PHF Volume:	10	11	2	100	2	414	273	1792	5	12	2638	78
Reduct Vol:	0	0	0	0	0	0	0	0	0	0	0	0
Reduced Vol:	10	11	2	100	2	414	273	1792	5	12	2638	78
PCE Adj:	1.00	1.00	1.00	1.00	1.00	1.00	1.00	1.00	1.00	1.00	1.00	1.00
MLF Adj:	1.00	1.00	1.00	1.00	1.00	1.00	1.00	1.00	1.00	1.00	1.00	1.00
FinalVolume:	10	11	2	100	2	414	273	1792	5	12	2638	78
OvlAdjVol:						141						
Saturation Flow Module:												
Sat/Lane:	1600	1600	1600	1600	1600	1600	1600	1600	1600	1600	1600	1600
Adjustment:	1.00	1.00	1.00	1.00	1.00	1.00	1.00	1.00	1.00	1.00	1.00	1.00
Lanes:	0.43	0.48	0.09	0.98	0.02	1.00	1.00	1.99	0.01	1.00	3.00	1.00
Final Sat.:	696	765	139	1569	31	1600	1600	3190	10	1600	4800	1600
Capacity Analysis Module:												
Vol/Sat:	0.01	0.01	0.01	0.06	0.06	0.26	0.17	0.56	0.56	0.01	0.55	0.05
OvlAdjV/S:						0.09						
Crit Moves:	****					****	****				****	

Newport Banning Ranch
Year 2016 Cumulative Conditions without Project
PM Peak Hour

Level Of Service Computation Report
ICU 1(Loss as Cycle Length %) Method (Future Volume Alternative)

Intersection #11 Tustin Ave/W. Coast Hwy

Cycle (sec):	120	Critical Vol./Cap.(X):	0.681
Loss Time (sec):	0 (Y+R=4.0 sec)	Average Delay (sec/veh):	xxxxxx
Optimal Cycle:	58	Level Of Service:	B

Street Name:	Tustin Avenue						W. Coast Highway					
Approach:	North Bound			South Bound			East Bound			West Bound		
Movement:	L - T - R			L - T - R			L - T - R			L - T - R		
Control:	Permitted			Permitted			Protected			Permitted		
Rights:	Include			Include			Include			Include		
Min. Green:	0	0	0	0	0	0	0	0	0	0	0	0
Lanes:	0 0 0 1 0			0 0 1! 0 0			1 0 1 1 0			0 0 3 0 1		
Volume Module:												
Base Vol:	0	1	2	55	0	27	94	1376	20	0	2230	52
Growth Adj:	1.00	1.00	1.00	1.00	1.00	1.00	1.07	1.07	1.07	1.07	1.07	1.07
Initial Bse:	0	1	2	55	0	27	101	1475	21	0	2391	56
Added Vol:	0	0	0	0	0	0	0	182	0	0	189	0
Committed P:	0	0	0	0	0	0	0	140	0	0	143	0
Initial Fut:	0	1	2	55	0	27	101	1797	21	0	2723	56
User Adj:	1.00	1.00	1.00	1.00	1.00	1.00	1.00	1.00	1.00	1.00	1.00	1.00
PHF Adj:	1.00	1.00	1.00	1.00	1.00	1.00	1.00	1.00	1.00	1.00	1.00	1.00
PHF Volume:	0	1	2	55	0	27	101	1797	21	0	2723	56
Reduct Vol:	0	0	0	0	0	0	0	0	0	0	0	0
Reduced Vol:	0	1	2	55	0	27	101	1797	21	0	2723	56
PCE Adj:	1.00	1.00	1.00	1.00	1.00	1.00	1.00	1.00	1.00	1.00	1.00	1.00
MLF Adj:	1.00	1.00	1.00	1.00	1.00	1.00	1.00	1.00	1.00	1.00	1.00	1.00
FinalVolume:	0	1	2	55	0	27	101	1797	21	0	2723	56
Saturation Flow Module:												
Sat/Lane:	1600	1600	1600	1600	1600	1600	1600	1600	1600	1600	1600	1600
Adjustment:	1.00	1.00	1.00	1.00	1.00	1.00	1.00	1.00	1.00	1.00	1.00	1.00
Lanes:	0.00	0.33	0.67	0.67	0.00	0.33	1.00	1.98	0.02	0.00	3.00	1.00
Final Sat.:	0	533	1067	1073	0	527	1600	3162	38	0	4800	1600
Capacity Analysis Module:												
Vol/Sat:	0.00	0.00	0.00	0.03	0.00	0.05	0.06	0.57	0.57	0.00	0.57	0.03
Crit Moves:	****					****	****				****	

Newport Banning Ranch
Year 2016 Cumulative Conditions without Project
PM Peak Hour

Level Of Service Computation Report
ICU 1(Loss as Cycle Length %) Method (Future Volume Alternative)

Intersection #12 Dover Dr/W. Coast Hwy

Cycle (sec):	120	Critical Vol./Cap.(X):	0.846
Loss Time (sec):	0 (Y+R=4.0 sec)	Average Delay (sec/veh):	xxxxxx
Optimal Cycle:	148	Level Of Service:	D

Street Name:	Dover Drive						W. Coast Highway					
Approach:	North Bound			South Bound			East Bound			West Bound		
Movement:	L - T - R			L - T - R			L - T - R			L - T - R		
Control:	Split Phase			Split Phase			Protected			Protected		
Rights:	Include			Include			Include			Ignore		
Min. Green:	0	0	0	0	0	0	0	0	0	0	0	0
Lanes:	1 0 1	1 0		3 0 1	0 1		2 0 2	1 0		1 0 3	0 1	
Volume Module:												
Base Vol:	35	42	41	918	61	119	145	1270	25	50	2153	1021
Growth Adj:	1.00	1.00	1.00	1.00	1.00	1.00	1.07	1.07	1.07	1.07	1.07	1.07
Initial Bse:	35	42	41	918	61	119	155	1361	27	54	2308	1095
Added Vol:	5	0	0	110	0	14	11	166	5	0	171	75
Committed P:	0	0	0	3	0	23	34	132	0	0	127	12
Initial Fut:	40	42	41	1031	61	156	200	1659	32	54	2606	1182
User Adj:	1.00	1.00	1.00	1.00	1.00	1.00	1.00	1.00	1.00	1.00	1.00	0.00
PHF Adj:	1.00	1.00	1.00	1.00	1.00	1.00	1.00	1.00	1.00	1.00	1.00	0.00
PHF Volume:	40	42	41	1031	61	156	200	1659	32	54	2606	0
Reduct Vol:	0	0	0	0	0	0	0	0	0	0	0	0
Reduced Vol:	40	42	41	1031	61	156	200	1659	32	54	2606	0
PCE Adj:	1.00	1.00	1.00	1.00	1.00	1.00	1.00	1.00	1.00	1.00	1.00	0.00
MLF Adj:	1.00	1.00	1.00	1.00	1.00	1.00	1.00	1.00	1.00	1.00	1.00	0.00
FinalVolume:	40	42	41	1031	61	156	200	1659	32	54	2606	0
Saturation Flow Module:												
Sat/Lane:	1600	1600	1600	1600	1600	1600	1600	1600	1600	1600	1600	1600
Adjustment:	1.00	1.00	1.00	1.00	1.00	1.00	1.00	1.00	1.00	1.00	1.00	1.00
Lanes:	1.00	1.01	0.99	3.00	1.00	1.00	2.00	2.94	0.06	1.00	3.00	1.00
Final Sat.:	1600	1619	1581	4800	1600	1600	3200	4710	90	1600	4800	1600
Capacity Analysis Module:												
Vol/Sat:	0.03	0.03	0.03	0.21	0.04	0.10	0.06	0.35	0.35	0.03	0.54	0.00
Crit Moves:			****	****			****				****	

Newport Banning Ranch
Year 2016 Cumulative Conditions without Project
PM Peak Hour

Level Of Service Computation Report
ICU 1(Loss as Cycle Length %) Method (Future Volume Alternative)

Intersection #13 Magnolia St/Hamilton Ave

Cycle (sec):	100	Critical Vol./Cap.(X):	0.638
Loss Time (sec):	5 (Y+R=4.0 sec)	Average Delay (sec/veh):	xxxxxx
Optimal Cycle:	32	Level Of Service:	B

Street Name:	Magnolia Street						Hamilton Avenue					
Approach:	North Bound			South Bound			East Bound			West Bound		
Movement:	L - T - R			L - T - R			L - T - R			L - T - R		
Control:	Prot+Permit			Prot+Permit			Permitted			Permitted		
Rights:	Include			Include			Include			Include		
Min. Green:	0	0	0	0	0	0	0	0	0	0	0	0
Lanes:	1 0 1	1 0		1 0 2	0 1		1 0 0	1 0		1 0 1	0 1	
Volume Module:												
Base Vol:	100	365	55	192	247	25	9	188	71	71	413	379
Growth Adj:	1.07	1.07	1.07	1.07	1.07	1.07	1.07	1.07	1.07	1.07	1.07	1.07
Initial Bse:	107	391	59	206	265	27	10	202	76	76	443	406
Added Vol:	31	57	24	0	82	32	18	38	37	38	54	0
Committed P:	4	6	0	0	5	0	0	0	2	0	0	0
Initial Fut:	142	454	83	206	352	59	28	240	115	114	497	406
User Adj:	1.00	1.00	1.00	1.00	1.00	1.00	1.00	1.00	1.00	1.00	1.00	1.00
PHF Adj:	1.00	1.00	1.00	1.00	1.00	1.00	1.00	1.00	1.00	1.00	1.00	1.00
PHF Volume:	142	454	83	206	352	59	28	240	115	114	497	406
Reduct Vol:	0	0	0	0	0	0	0	0	0	0	0	0
Reduced Vol:	142	454	83	206	352	59	28	240	115	114	497	406
PCE Adj:	1.00	1.00	1.00	1.00	1.00	1.00	1.00	1.00	1.00	1.00	1.00	1.00
MLF Adj:	1.00	1.00	1.00	1.00	1.00	1.00	1.00	1.00	1.00	1.00	1.00	1.00
FinalVolume:	142	454	83	206	352	59	28	240	115	114	497	406
Saturation Flow Module:												
Sat/Lane:	1600	1600	1600	1600	1600	1600	1600	1600	1600	1600	1600	1600
Adjustment:	1.06	1.06	1.06	1.06	1.06	1.06	1.06	1.06	1.06	1.06	1.06	1.06
Lanes:	1.00	1.69	0.31	1.00	2.00	1.00	1.00	0.68	0.32	1.00	1.00	1.00
Final Sat.:	1700	2875	525	1700	3400	1700	1700	1148	552	1700	1700	1700
Capacity Analysis Module:												
Vol/Sat:	0.08	0.16	0.16	0.12	0.10	0.03	0.02	0.21	0.21	0.07	0.29	0.24
Crit Moves:		****		****			****				****	

Newport Banning Ranch
Year 2016 Cumulative Conditions without Project
PM Peak Hour

Level Of Service Computation Report
ICU 1(Loss as Cycle Length %) Method (Future Volume Alternative)

Intersection #14 Bushard St/Hamilton Ave

Cycle (sec):	100	Critical Vol./Cap.(X):	0.589
Loss Time (sec):	5 (Y+R=4.0 sec)	Average Delay (sec/veh):	xxxxxx
Optimal Cycle:	28	Level Of Service:	A

Street Name:	Bushard Street						Hamilton Avenue					
Approach:	North Bound			South Bound			East Bound			West Bound		
Movement:	L - T - R			L - T - R			L - T - R			L - T - R		
Control:	Permitted			Permitted			Permitted			Permitted		
Rights:	Include			Include			Include			Include		
Min. Green:	0	0	0	0	0	0	0	0	0	0	0	0
Lanes:	1 0 1	1 0		1 0 1	1 0		1 0 1	1 0		1 0 1	1 0	
Volume Module:												
Base Vol:	55	265	43	117	143	39	26	355	43	44	779	251
Growth Adj:	1.07	1.07	1.07	1.07	1.07	1.07	1.07	1.07	1.07	1.07	1.07	1.07
Initial Bse:	59	284	46	125	153	42	28	381	46	47	835	269
Added Vol:	0	0	0	0	0	0	0	62	0	0	92	0
Committed P:	0	0	0	0	0	0	0	0	0	0	0	0
Initial Fut:	59	284	46	125	153	42	28	443	46	47	927	269
User Adj:	1.00	1.00	1.00	1.00	1.00	1.00	1.00	1.00	1.00	1.00	1.00	1.00
PHF Adj:	1.00	1.00	1.00	1.00	1.00	1.00	1.00	1.00	1.00	1.00	1.00	1.00
PHF Volume:	59	284	46	125	153	42	28	443	46	47	927	269
Reduct Vol:	0	0	0	0	0	0	0	0	0	0	0	0
Reduced Vol:	59	284	46	125	153	42	28	443	46	47	927	269
PCE Adj:	1.00	1.00	1.00	1.00	1.00	1.00	1.00	1.00	1.00	1.00	1.00	1.00
MLF Adj:	1.00	1.00	1.00	1.00	1.00	1.00	1.00	1.00	1.00	1.00	1.00	1.00
FinalVolume:	59	284	46	125	153	42	28	443	46	47	927	269
Saturation Flow Module:												
Sat/Lane:	1600	1600	1600	1600	1600	1600	1600	1600	1600	1600	1600	1600
Adjustment:	1.06	1.06	1.06	1.06	1.06	1.06	1.06	1.06	1.06	1.06	1.06	1.06
Lanes:	1.00	1.72	0.28	1.00	1.57	0.43	1.00	1.81	0.19	1.00	1.55	0.45
Final Sat.:	1700	2925	475	1700	2671	729	1700	3079	321	1700	2635	765
Capacity Analysis Module:												
Vol/Sat:	0.03	0.10	0.10	0.07	0.06	0.06	0.02	0.14	0.14	0.03	0.35	0.35
Crit Moves:		****		****			****				****	

Newport Banning Ranch
Year 2016 Cumulative Conditions without Project
PM Peak Hour

Level Of Service Computation Report
ICU 1(Loss as Cycle Length %) Method (Future Volume Alternative)

Intersection #15 Brookhurst St/Hamilton Ave (Victoria St)

Cycle (sec):	100	Critical Vol./Cap.(X):	0.710
Loss Time (sec):	5 (Y+R=4.0 sec)	Average Delay (sec/veh):	xxxxxx
Optimal Cycle:	38	Level Of Service:	C

Street Name:	Brookhurst						Hamilton Avenue (Victoria Street)					
Approach:	North Bound			South Bound			East Bound			West Bound		
Movement:	L - T - R			L - T - R			L - T - R			L - T - R		
Control:	Protected			Protected			Prot+Permit			Prot+Permit		
Rights:	Include			Include			Include			Include		
Min. Green:	0	0	0	0	0	0	0	0	0	0	0	0
Lanes:	1 0 3 0 1			2 0 2 1 0			1 0 1 1 0			1 0 2 0 1		
Volume Module:												
Base Vol:	117	581	192	397	335	106	113	353	67	277	943	489
Growth Adj:	1.07	1.07	1.07	1.07	1.07	1.07	1.07	1.07	1.07	1.07	1.07	1.07
Initial Bse:	125	623	206	426	359	114	121	378	72	297	1011	524
Added Vol:	0	10	4	11	9	70	42	20	0	4	22	4
Committed P:	0	5	0	0	0	0	0	0	0	0	0	0
Initial Fut:	125	638	210	437	368	184	163	398	72	301	1033	528
User Adj:	1.00	1.00	1.00	1.00	1.00	1.00	1.00	1.00	1.00	1.00	1.00	1.00
PHF Adj:	1.00	1.00	1.00	1.00	1.00	1.00	1.00	1.00	1.00	1.00	1.00	1.00
PHF Volume:	125	638	210	437	368	184	163	398	72	301	1033	528
Reduct Vol:	0	0	0	0	0	0	0	0	0	0	0	0
Reduced Vol:	125	638	210	437	368	184	163	398	72	301	1033	528
PCE Adj:	1.00	1.00	1.00	1.00	1.00	1.00	1.00	1.00	1.00	1.00	1.00	1.00
MLF Adj:	1.00	1.00	1.00	1.00	1.00	1.00	1.00	1.00	1.00	1.00	1.00	1.00
FinalVolume:	125	638	210	437	368	184	163	398	72	301	1033	528
Saturation Flow Module:												
Sat/Lane:	1600	1600	1600	1600	1600	1600	1600	1600	1600	1600	1600	1600
Adjustment:	1.06	1.06	1.06	1.06	1.06	1.06	1.06	1.06	1.06	1.06	1.06	1.06
Lanes:	1.00	3.00	1.00	2.00	2.00	1.00	1.00	1.69	0.31	1.00	2.00	1.00
Final Sat.:	1700	5100	1700	3400	3403	1697	1700	2881	519	1700	3400	1700
Capacity Analysis Module:												
Vol/Sat:	0.07	0.13	0.12	0.13	0.11	0.11	0.10	0.14	0.14	0.18	0.30	0.31
Crit Moves:		****		****			****					****

Newport Banning Ranch
Year 2016 Cumulative Conditions without Project
PM Peak Hour

Level Of Service Computation Report
ICU 1(Loss as Cycle Length %) Method (Future Volume Alternative)

Intersection #16 Magnolia St/Banning Ave

Cycle (sec):	100	Critical Vol./Cap.(X):	0.328
Loss Time (sec):	5 (Y+R=4.0 sec)	Average Delay (sec/veh):	xxxxxx
Optimal Cycle:	18	Level Of Service:	A

Street Name:	Magnolia Street						Banning Avenue					
Approach:	North Bound			South Bound			East Bound			West Bound		
Movement:	L - T - R			L - T - R			L - T - R			L - T - R		
Control:	Protected			Protected			Split Phase			Split Phase		
Rights:	Include			Include			Include			Include		
Min. Green:	0	0	0	0	0	0	0	0	0	0	0	0
Lanes:	0 0 1	1 0		1 0 2	0 0		0 0 0	0 0		2 0 0	0 1	
Volume Module:												
Base Vol:	0	435	60	76	300	0	0	0	0	23	0	56
Growth Adj:	1.07	1.07	1.07	1.07	1.07	1.07	1.07	1.07	1.07	1.07	1.07	1.07
Initial Bse:	0	466	64	81	322	0	0	0	0	25	0	60
Added Vol:	0	59	4	13	41	0	0	0	0	4	0	13
Committed P:	0	18	0	0	11	0	0	0	0	0	0	0
Initial Fut:	0	543	68	94	374	0	0	0	0	29	0	73
User Adj:	1.00	1.00	1.00	1.00	1.00	1.00	1.00	1.00	1.00	1.00	1.00	1.00
PHF Adj:	1.00	1.00	1.00	1.00	1.00	1.00	1.00	1.00	1.00	1.00	1.00	1.00
PHF Volume:	0	543	68	94	374	0	0	0	0	29	0	73
Reduct Vol:	0	0	0	0	0	0	0	0	0	0	0	0
Reduced Vol:	0	543	68	94	374	0	0	0	0	29	0	73
PCE Adj:	1.00	1.00	1.00	1.00	1.00	1.00	1.00	1.00	1.00	1.00	1.00	1.00
MLF Adj:	1.00	1.00	1.00	1.00	1.00	1.00	1.00	1.00	1.00	1.00	1.00	1.00
FinalVolume:	0	543	68	94	374	0	0	0	0	29	0	73
Saturation Flow Module:												
Sat/Lane:	1600	1600	1600	1600	1600	1600	1600	1600	1600	1600	1600	1600
Adjustment:	1.06	1.06	1.06	1.06	1.06	1.06	1.06	1.06	1.06	1.06	1.06	1.06
Lanes:	0.00	1.78	0.22	1.00	2.00	0.00	0.00	0.00	0.00	2.00	0.00	1.00
Final Sat.:	0	3020	380	1700	3400	0	0	0	0	3400	0	1700
Capacity Analysis Module:												
Vol/Sat:	0.00	0.18	0.18	0.06	0.11	0.00	0.00	0.00	0.00	0.01	0.00	0.04
Crit Moves:		****		****								****

Newport Banning Ranch
Year 2016 Cumulative Conditions without Project
PM Peak Hour

Level Of Service Computation Report
2000 HCM 4-Way Stop Method (Future Volume Alternative)

Intersection #17 Bushard St/Banning Ave

Cycle (sec):	100	Critical Vol./Cap.(X):	0.204
Loss Time (sec):	5 (Y+R=4.0 sec)	Average Delay (sec/veh):	9.4
Optimal Cycle:	0	Level Of Service:	A

Street Name:	Bushard Street						Banning Avenue					
Approach:	North Bound			South Bound			East Bound			West Bound		
Movement:	L - T - R			L - T - R			L - T - R			L - T - R		
Control:	Stop Sign			Stop Sign			Stop Sign			Stop Sign		
Rights:	Include			Include			Include			Include		
Min. Green:	0	0	0	0	0	0	0	0	0	0	0	0
Lanes:	1 0 1	1 0		1 0 1	1 0		1 0 0	1 0		1 0 0	1 0	
Volume Module:												
Base Vol:	28	213	23	12	116	38	25	52	10	24	50	21
Growth Adj:	1.07	1.07	1.07	1.07	1.07	1.07	1.07	1.07	1.07	1.07	1.07	1.07
Initial Bse:	30	228	25	13	124	41	27	56	11	26	54	23
Added Vol:	7	0	0	0	0	0	0	10	8	0	9	0
Committed P:	0	3	0	0	2	0	0	0	0	0	0	0
Initial Fut:	37	231	25	13	126	41	27	66	19	26	63	23
User Adj:	1.00	1.00	1.00	1.00	1.00	1.00	1.00	1.00	1.00	1.00	1.00	1.00
PHF Adj:	1.00	1.00	1.00	1.00	1.00	1.00	1.00	1.00	1.00	1.00	1.00	1.00
PHF Volume:	37	231	25	13	126	41	27	66	19	26	63	23
Reduct Vol:	0	0	0	0	0	0	0	0	0	0	0	0
Reduced Vol:	37	231	25	13	126	41	27	66	19	26	63	23
PCE Adj:	1.00	1.00	1.00	1.00	1.00	1.00	1.00	1.00	1.00	1.00	1.00	1.00
MLF Adj:	1.00	1.00	1.00	1.00	1.00	1.00	1.00	1.00	1.00	1.00	1.00	1.00
FinalVolume:	37	231	25	13	126	41	27	66	19	26	63	23
Saturation Flow Module:												
Adjustment:	1.00	1.00	1.00	1.00	1.00	1.00	1.00	1.00	1.00	1.00	1.00	1.00
Lanes:	1.00	1.81	0.19	1.00	1.51	0.49	1.00	0.78	0.22	1.00	0.74	0.26
Final Sat.:	569	1132	122	544	910	304	538	464	132	538	441	159
Capacity Analysis Module:												
Vol/Sat:	0.07	0.20	0.20	0.02	0.14	0.13	0.05	0.14	0.14	0.05	0.14	0.14
Crit Moves:		****			****				****		****	
Delay/Veh:	9.2	9.6	9.5	9.2	9.3	9.0	9.3	9.2	9.2	9.3	9.2	9.2
Delay Adj:	1.00	1.00	1.00	1.00	1.00	1.00	1.00	1.00	1.00	1.00	1.00	1.00
AdjDel/Veh:	9.2	9.6	9.5	9.2	9.3	9.0	9.3	9.2	9.2	9.3	9.2	9.2
LOS by Move:	A	A	A	A	A	A	A	A	A	A	A	A
ApproachDel:		9.5			9.2			9.3			9.2	
Delay Adj:		1.00			1.00			1.00			1.00	
ApprAdjDel:		9.5			9.2			9.3			9.2	
LOS by Appr:		A			A			A			A	
AllWayAvgQ:	0.1	0.2	0.2	0.0	0.1	0.1	0.0	0.1	0.1	0.0	0.1	0.1

Newport Banning Ranch
Year 2016 Cumulative Conditions without Project
PM Peak Hour

Note: Queue reported is the number of cars per lane.

Newport Banning Ranch
Year 2016 Cumulative Conditions without Project
PM Peak Hour

Level Of Service Computation Report
ICU 1(Loss as Cycle Length %) Method (Future Volume Alternative)

Intersection #18 Brookhurst St/Banning Ave

Cycle (sec):	100	Critical Vol./Cap.(X):	0.259
Loss Time (sec):	5 (Y+R=4.0 sec)	Average Delay (sec/veh):	xxxxxx
Optimal Cycle:	16	Level Of Service:	A

Street Name:	Brookhurst Street						Banning Avenue					
Approach:	North Bound			South Bound			East Bound			West Bound		
Movement:	L - T - R			L - T - R			L - T - R			L - T - R		
Control:	Protected			Protected			Split Phase			Split Phase		
Rights:	Include			Include			Include			Include		
Min. Green:	0	0	0	0	0	0	0	0	0	0	0	0
Lanes:	1 0 3 0 0			0 0 2 1 0			1 0 0 0 1			0 0 0 0 0		
Volume Module:												
Base Vol:	12	769	0	0	509	100	61	0	7	0	0	0
Growth Adj:	1.07	1.07	1.07	1.07	1.07	1.07	1.07	1.07	1.07	1.07	1.07	1.07
Initial Bse:	13	824	0	0	546	107	65	0	8	0	0	0
Added Vol:	0	4	0	0	4	9	10	0	0	0	0	0
Committed P:	0	10	0	0	4	0	0	0	0	0	0	0
Initial Fut:	13	838	0	0	554	116	75	0	8	0	0	0
User Adj:	1.00	1.00	1.00	1.00	1.00	1.00	1.00	1.00	1.00	1.00	1.00	1.00
PHF Adj:	1.00	1.00	1.00	1.00	1.00	1.00	1.00	1.00	1.00	1.00	1.00	1.00
PHF Volume:	13	838	0	0	554	116	75	0	8	0	0	0
Reduct Vol:	0	0	0	0	0	0	0	0	0	0	0	0
Reduced Vol:	13	838	0	0	554	116	75	0	8	0	0	0
PCE Adj:	1.00	1.00	1.00	1.00	1.00	1.00	1.00	1.00	1.00	1.00	1.00	1.00
MLF Adj:	1.00	1.00	1.00	1.00	1.00	1.00	1.00	1.00	1.00	1.00	1.00	1.00
FinalVolume:	13	838	0	0	554	116	75	0	8	0	0	0
Saturation Flow Module:												
Sat/Lane:	1600	1600	1600	1600	1600	1600	1600	1600	1600	1600	1600	1600
Adjustment:	1.06	1.06	1.06	1.06	1.06	1.06	1.06	1.06	1.06	1.06	1.06	1.06
Lanes:	1.00	3.00	0.00	0.00	2.48	0.52	1.00	0.00	1.00	0.00	0.00	0.00
Final Sat.:	1700	5100	0	0	4215	885	1700	0	1700	0	0	0
Capacity Analysis Module:												
Vol/Sat:	0.01	0.16	0.00	0.00	0.13	0.13	0.04	0.00	0.00	0.00	0.00	0.00
Crit Moves:		****		****			****					

Newport Banning Ranch
Year 2016 Cumulative Conditions without Project
PM Peak Hour

Level Of Service Computation Report
ICU 1(Loss as Cycle Length %) Method (Future Volume Alternative)

Intersection #19 Magnolia St/PCH

Cycle (sec):	120	Critical Vol./Cap.(X):	0.690
Loss Time (sec):	6 (Y+R=4.0 sec)	Average Delay (sec/veh):	xxxxxx
Optimal Cycle:	40	Level Of Service:	B

Street Name:	Magnolia Street						Pacific Coast Highway					
Approach:	North Bound			South Bound			East Bound			West Bound		
Movement:	L - T - R			L - T - R			L - T - R			L - T - R		
Control:	Split Phase			Split Phase			Protected			Protected		
Rights:	Include			Include			Include			Include		
Min. Green:	0	0	0	0	0	0	0	0	0	0	0	0
Lanes:	1 0 0 1 0			1 1 0 0 1			1 0 3 0 1			1 0 3 0 1		
Volume Module:												
Base Vol:	10	22	15	101	30	152	137	885	17	30	1706	295
Growth Adj:	1.07	1.07	1.07	1.07	1.07	1.07	1.07	1.07	1.07	1.07	1.07	1.07
Initial Bse:	11	24	16	108	32	163	147	949	18	32	1829	316
Added Vol:	0	0	0	15	0	30	37	176	0	0	135	26
Committed P:	0	0	0	11	0	0	0	31	0	0	53	18
Initial Fut:	11	24	16	134	32	193	184	1156	18	32	2017	360
User Adj:	1.00	1.00	1.00	1.00	1.00	1.00	1.00	1.00	1.00	1.00	1.00	1.00
PHF Adj:	1.00	1.00	1.00	1.00	1.00	1.00	1.00	1.00	1.00	1.00	1.00	1.00
PHF Volume:	11	24	16	134	32	193	184	1156	18	32	2017	360
Reduct Vol:	0	0	0	0	0	0	0	0	0	0	0	0
Reduced Vol:	11	24	16	134	32	193	184	1156	18	32	2017	360
PCE Adj:	1.00	1.00	1.00	1.00	1.00	1.00	1.00	1.00	1.00	1.00	1.00	1.00
MLF Adj:	1.00	1.00	1.00	1.00	1.00	1.00	1.00	1.00	1.00	1.00	1.00	1.00
FinalVolume:	11	24	16	134	32	193	184	1156	18	32	2017	360
Saturation Flow Module:												
Sat/Lane:	1600	1600	1600	1600	1600	1600	1600	1600	1600	1600	1600	1600
Adjustment:	1.06	1.06	1.06	1.06	1.06	1.06	1.06	1.06	1.06	1.06	1.06	1.06
Lanes:	1.00	0.59	0.41	1.61	0.39	1.00	1.00	3.00	1.00	1.00	3.00	1.00
Final Sat.:	1700	1011	689	2743	657	1700	1700	5100	1700	1700	5100	1700
Capacity Analysis Module:												
Vol/Sat:	0.01	0.02	0.02	0.05	0.05	0.11	0.11	0.23	0.01	0.02	0.40	0.21
Crit Moves:		****				****	****				****	

Newport Banning Ranch
Year 2016 Cumulative Conditions without Project
PM Peak Hour

Level Of Service Computation Report
ICU 1(Loss as Cycle Length %) Method (Future Volume Alternative)

Intersection #20 Brookhurst St/Bushard St

Cycle (sec):	100	Critical Vol./Cap.(X):	0.355
Loss Time (sec):	5 (Y+R=4.0 sec)	Average Delay (sec/veh):	xxxxxx
Optimal Cycle:	19	Level Of Service:	A

Street Name:	Brookhurst Street									Bushard Street								
Approach:	North Bound			South Bound			East Bound			West Bound		
Movement:	L	- T	- R	L	- T	- R	L	- T	- R	L	- T	- R
Control:	Protected			Protected			Permitted			Permitted		
Rights:	Include			Include			Include			Include		
Min. Green:	0	0	0	0	0	0	0	0	0	0	0	0
Lanes:	1 0	2 1	0	1 0	3 0	1	1 0	0 0	1	0 0	1! 0	0
Volume Module:												
Base Vol:	222	662	0	0	430	22	13	0	92	0	0	0
Growth Adj:	1.07	1.07	1.07	1.07	1.07	1.07	1.07	1.07	1.07	1.07	1.07	1.07
Initial Bse:	238	710	0	0	461	24	14	0	99	0	0	0
Added Vol:	6	4	0	0	4	0	0	0	8	0	0	0
Committed P:	6	18	0	0	8	0	0	0	5	0	0	0
Initial Fut:	250	732	0	0	473	24	14	0	112	0	0	0
User Adj:	1.00	1.00	1.00	1.00	1.00	1.00	1.00	1.00	1.00	1.00	1.00	1.00
PHF Adj:	1.00	1.00	1.00	1.00	1.00	1.00	1.00	1.00	1.00	1.00	1.00	1.00
PHF Volume:	250	732	0	0	473	24	14	0	112	0	0	0
Reduct Vol:	0	0	0	0	0	0	0	0	0	0	0	0
Reduced Vol:	250	732	0	0	473	24	14	0	112	0	0	0
PCE Adj:	1.00	1.00	1.00	1.00	1.00	1.00	1.00	1.00	1.00	1.00	1.00	1.00
MLF Adj:	1.00	1.00	1.00	1.00	1.00	1.00	1.00	1.00	1.00	1.00	1.00	1.00
FinalVolume:	250	732	0	0	473	24	14	0	112	0	0	0
Saturation Flow Module:												
Sat/Lane:	1600	1600	1600	1600	1600	1600	1600	1600	1600	1600	1600	1600
Adjustment:	1.06	1.06	1.06	1.06	1.06	1.06	1.06	1.06	1.06	1.06	1.06	1.06
Lanes:	1.00	3.00	0.00	1.00	3.00	1.00	1.00	0.00	1.00	0.00	1.00	0.00
Final Sat.:	1700	5100	0	1700	5100	1700	1700	0	1700	0	1700	0
Capacity Analysis Module:												
Vol/Sat:	0.15	0.14	0.00	0.00	0.09	0.01	0.01	0.00	0.07	0.00	0.00	0.00
Crit Moves:	****				****				****			

Newport Banning Ranch
Year 2016 Cumulative Conditions without Project
PM Peak Hour

Level Of Service Computation Report
ICU 1(Loss as Cycle Length %) Method (Future Volume Alternative)

Intersection #21 Brookhurst St/PCH

Cycle (sec): 120 Critical Vol./Cap.(X): 0.746
Loss Time (sec): 6 (Y+R=4.0 sec) Average Delay (sec/veh): xxxxxx
Optimal Cycle: 47 Level Of Service: C

Street Name:	Brookhurst Street						Pacific Coast HIghway					
Approach:	North Bound			South Bound			East Bound			West Bound		
Movement:	L - T - R			L - T - R			L - T - R			L - T - R		
Control:	Split Phase			Split Phase			Protected			Protected		
Rights:	Include			Include			Include			Ovl		
Min. Green:	0	0	0	0	0	0	0	0	0	0	0	0
Lanes:	1 0 0 1 0			2 0 1 0 1			1 0 3 0 1			1 0 3 0 1		
Volume Module:												
Base Vol:	8	23	17	324	6	179	182	797	2	13	1871	757
Growth Adj:	1.07	1.07	1.07	1.07	1.07	1.07	1.07	1.07	1.07	1.07	1.07	1.07
Initial Bse:	9	25	18	347	6	192	195	854	2	14	2006	812
Added Vol:	0	0	0	8	0	4	4	187	0	0	158	6
Committed P:	0	0	0	14	0	0	0	42	0	0	71	24
Initial Fut:	9	25	18	369	6	196	199	1083	2	14	2235	842
User Adj:	1.00	1.00	1.00	1.00	1.00	1.00	1.00	1.00	1.00	1.00	1.00	1.00
PHF Adj:	1.00	1.00	1.00	1.00	1.00	1.00	1.00	1.00	1.00	1.00	1.00	1.00
PHF Volume:	9	25	18	369	6	196	199	1083	2	14	2235	842
Reduct Vol:	0	0	0	0	0	0	0	0	0	0	0	0
Reduced Vol:	9	25	18	369	6	196	199	1083	2	14	2235	842
PCE Adj:	1.00	1.00	1.00	1.00	1.00	1.00	1.00	1.00	1.00	1.00	1.00	1.00
MLF Adj:	1.00	1.00	1.00	1.00	1.00	1.00	1.00	1.00	1.00	1.00	1.00	1.00
FinalVolume:	9	25	18	369	6	196	199	1083	2	14	2235	842
OvlAdjVol:												646
Saturation Flow Module:												
Sat/Lane:	1600	1600	1600	1600	1600	1600	1600	1600	1600	1600	1600	1600
Adjustment:	1.06	1.06	1.06	1.06	1.06	1.06	1.06	1.06	1.06	1.06	1.06	1.06
Lanes:	1.00	0.57	0.43	2.00	1.00	1.00	1.00	3.00	1.00	1.00	3.00	1.00
Final Sat.:	1700	978	723	3400	1700	1700	1700	5100	1700	1700	5100	1700
Capacity Analysis Module:												
Vol/Sat:	0.01	0.03	0.03	0.11	0.00	0.12	0.12	0.21	0.00	0.01	0.44	0.50
OvlAdjV/S:												0.38
Crit Moves:			****			****	****				****	

Newport Banning Ranch
Year 2016 Cumulative Conditions without Project
PM Peak Hour

Level Of Service Computation Report
ICU 1(Loss as Cycle Length %) Method (Future Volume Alternative)

Intersection #22 Placentia Ave/Victoria St

Cycle (sec):	100	Critical Vol./Cap.(X):	0.862
Loss Time (sec):	0 (Y+R=4.0 sec)	Average Delay (sec/veh):	xxxxxx
Optimal Cycle:	165	Level Of Service:	D

Street Name:	Placentia Avenue						Victoria Street					
Approach:	North Bound			South Bound			East Bound			West Bound		
Movement:	L - T - R			L - T - R			L - T - R			L - T - R		
Control:	Protected			Protected			Protected			Protected		
Rights:	Include			Include			Ovl			Include		
Min. Green:	0	0	0	0	0	0	0	0	0	0	0	0
Lanes:	2 0 2 0 1			1 0 2 0 1			1 0 2 0 1			1 0 2 0 1		
Volume Module:												
Base Vol:	520	674	157	103	490	152	71	587	306	166	1376	87
Growth Adj:	1.07	1.07	1.07	1.07	1.07	1.07	1.07	1.07	1.07	1.07	1.07	1.07
Initial Bse:	557	723	168	110	525	163	76	629	328	178	1475	93
Added Vol:	4	12	48	0	18	0	0	27	11	111	27	0
Committed P:	0	0	0	0	0	0	0	0	0	0	0	0
Initial Fut:	561	735	216	110	543	163	76	656	339	289	1502	93
User Adj:	1.00	1.00	1.00	1.00	1.00	1.00	1.00	1.00	1.00	1.00	1.00	1.00
PHF Adj:	1.00	1.00	1.00	1.00	1.00	1.00	1.00	1.00	1.00	1.00	1.00	1.00
PHF Volume:	561	735	216	110	543	163	76	656	339	289	1502	93
Reduct Vol:	0	0	0	0	0	0	0	0	0	0	0	0
Reduced Vol:	561	735	216	110	543	163	76	656	339	289	1502	93
PCE Adj:	1.00	1.00	1.00	1.00	1.00	1.00	1.00	1.00	1.00	1.00	1.00	1.00
MLF Adj:	1.00	1.00	1.00	1.00	1.00	1.00	1.00	1.00	1.00	1.00	1.00	1.00
FinalVolume:	561	735	216	110	543	163	76	656	339	289	1502	93
OvlAdjVol:									58			
Saturation Flow Module:												
Sat/Lane:	1600	1600	1600	1600	1600	1600	1600	1600	1600	1600	1600	1600
Adjustment:	1.00	1.00	1.00	1.00	1.00	1.00	1.00	1.00	1.00	1.00	1.00	1.00
Lanes:	2.00	2.00	1.00	1.00	2.00	1.00	1.00	2.00	1.00	1.00	2.00	1.00
Final Sat.:	3200	3200	1600	1600	3200	1600	1600	3200	1600	1600	3200	1600
Capacity Analysis Module:												
Vol/Sat:	0.18	0.23	0.14	0.07	0.17	0.10	0.05	0.21	0.21	0.18	0.47	0.06
OvlAdjV/S:									0.04			
Crit Moves:	****				****		****				****	

Newport Banning Ranch
Year 2016 Cumulative Conditions without Project
PM Peak Hour

Level Of Service Computation Report
ICU 1(Loss as Cycle Length %) Method (Future Volume Alternative)

Intersection #23 Pomona Ave/Victoria St

Cycle (sec):	100	Critical Vol./Cap.(X):	0.757
Loss Time (sec):	0 (Y+R=4.0 sec)	Average Delay (sec/veh):	xxxxxx
Optimal Cycle:	59	Level Of Service:	C

Street Name:	Pomona Avenue						Victoria Street					
Approach:	North Bound			South Bound			East Bound			West Bound		
Movement:	L - T - R			L - T - R			L - T - R			L - T - R		
Control:	Permitted			Permitted			Permitted			Permitted		
Rights:	Include			Include			Include			Include		
Min. Green:	0	0	0	0	0	0	0	0	0	0	0	0
Lanes:	1 0 0	1 0		0 1 0	1 0		0 1 0	2 0		1 0 1	2 0	
Volume Module:												
Base Vol:	50	138	119	20	145	28	21	806	79	118	1526	29
Growth Adj:	1.07	1.07	1.07	1.07	1.07	1.07	1.07	1.07	1.07	1.07	1.07	1.07
Initial Bse:	54	148	128	21	155	30	23	864	85	126	1636	31
Added Vol:	0	0	5	0	0	0	0	74	1	7	137	0
Committed P:	0	0	0	0	0	0	0	0	0	0	0	0
Initial Fut:	54	148	133	21	155	30	23	938	86	133	1773	31
User Adj:	1.00	1.00	1.00	1.00	1.00	1.00	1.00	1.00	1.00	1.00	1.00	1.00
PHF Adj:	1.00	1.00	1.00	1.00	1.00	1.00	1.00	1.00	1.00	1.00	1.00	1.00
PHF Volume:	54	148	133	21	155	30	23	938	86	133	1773	31
Reduct Vol:	0	0	0	0	0	0	0	0	0	0	0	0
Reduced Vol:	54	148	133	21	155	30	23	938	86	133	1773	31
PCE Adj:	1.00	1.00	1.00	1.00	1.00	1.00	1.00	1.00	1.00	1.00	1.00	1.00
MLF Adj:	1.00	1.00	1.00	1.00	1.00	1.00	1.00	1.00	1.00	1.00	1.00	1.00
FinalVolume:	54	148	133	21	155	30	23	938	86	133	1773	31
Saturation Flow Module:												
Sat/Lane:	1600	1600	1600	1600	1600	1600	1600	1600	1600	1600	1600	1600
Adjustment:	1.00	1.00	1.00	1.00	1.00	1.00	1.00	1.00	1.00	1.00	1.00	1.00
Lanes:	1.00	0.53	0.47	1.00	0.84	0.16	1.00	2.00	1.00	1.00	2.00	1.00
Final Sat.:	1600	844	756	1600	1341	259	1600	3200	1600	1600	3200	1600
Capacity Analysis Module:												
Vol/Sat:	0.03	0.18	0.18	0.01	0.12	0.12	0.01	0.29	0.05	0.08	0.55	0.02
Crit Moves:		****		****			****				****	

Newport Banning Ranch
Year 2016 Cumulative Conditions without Project
PM Peak Hour

Level Of Service Computation Report
ICU 1(Loss as Cycle Length %) Method (Future Volume Alternative)

Intersection #24 Harbor Blvd/Victoria St

Cycle (sec):	100	Critical Vol./Cap.(X):	0.884
Loss Time (sec):	0 (Y+R=4.0 sec)	Average Delay (sec/veh):	xxxxxx
Optimal Cycle:	180	Level Of Service:	D

Street Name:	Harbor Boulevard						Victoria Street					
Approach:	North Bound			South Bound			East Bound			West Bound		
Movement:	L - T - R			L - T - R			L - T - R			L - T - R		
Control:	Protected			Protected			Protected			Protected		
Rights:	Include			Ovl			Include			Include		
Min. Green:	0	0	0	0	0	0	0	0	0	0	0	0
Lanes:	1 0 3 0 1			1 0 3 0 1			2 0 1 1 0			2 0 2 0 1		
Volume Module:												
Base Vol:	118	1081	124	142	1116	294	269	639	80	121	1212	159
Growth Adj:	1.07	1.07	1.07	1.07	1.07	1.07	1.07	1.07	1.07	1.07	1.07	1.07
Initial Bse:	126	1159	133	152	1196	315	288	685	86	130	1299	170
Added Vol:	3	31	16	6	35	19	10	65	5	27	122	3
Committed P:	0	0	0	0	0	0	0	0	0	0	0	0
Initial Fut:	129	1190	149	158	1231	334	298	750	91	157	1421	173
User Adj:	1.00	1.00	1.00	1.00	1.00	1.00	1.00	1.00	1.00	1.00	1.00	1.00
PHF Adj:	1.00	1.00	1.00	1.00	1.00	1.00	1.00	1.00	1.00	1.00	1.00	1.00
PHF Volume:	129	1190	149	158	1231	334	298	750	91	157	1421	173
Reduct Vol:	0	0	0	0	0	0	0	0	0	0	0	0
Reduced Vol:	129	1190	149	158	1231	334	298	750	91	157	1421	173
PCE Adj:	1.00	1.00	1.00	1.00	1.00	1.00	1.00	1.00	1.00	1.00	1.00	1.00
MLF Adj:	1.00	1.00	1.00	1.00	1.00	1.00	1.00	1.00	1.00	1.00	1.00	1.00
FinalVolume:	129	1190	149	158	1231	334	298	750	91	157	1421	173
OvlAdjVol:						185						
Saturation Flow Module:												
Sat/Lane:	1600	1600	1600	1600	1600	1600	1600	1600	1600	1600	1600	1600
Adjustment:	1.00	1.00	1.00	1.00	1.00	1.00	1.00	1.00	1.00	1.00	1.00	1.00
Lanes:	1.00	3.00	1.00	1.00	3.00	1.00	2.00	1.78	0.22	2.00	2.00	1.00
Final Sat.:	1600	4800	1600	1600	4800	1600	3200	2855	345	3200	3200	1600
Capacity Analysis Module:												
Vol/Sat:	0.08	0.25	0.09	0.10	0.26	0.21	0.09	0.26	0.26	0.05	0.44	0.11
OvlAdjV/S:						0.12						
Crit Moves:		****		****			****				****	

Newport Banning Ranch
Year 2016 Cumulative Conditions without Project
PM Peak Hour

Level Of Service Computation Report
ICU 1(Loss as Cycle Length %) Method (Future Volume Alternative)

Intersection #25 Newport Blvd/Victoria St [Ramp]

Cycle (sec):	120	Critical Vol./Cap.(X):	0.507
Loss Time (sec):	0 (Y+R=4.0 sec)	Average Delay (sec/veh):	xxxxxx
Optimal Cycle:	38	Level Of Service:	A

Street Name:	Newport Boulevard									Victoria Street								
Approach:	North Bound			South Bound			East Bound			West Bound		
Movement:	L	- T	- R	L	- T	- R	L	- T	- R	L	- T	- R
Control:	Permitted			Permitted			Protected			Protected		
Rights:	Include			Ignore			Include			Include		
Min. Green:	0	0	0	0	0	0	0	0	0	0	0	0
Lanes:	0 0	0 0	0	1 1	2 0	1	0 0	2 1	0	1 0	1 0	0
Volume Module:												
Base Vol:	0	0	0	590	911	1230	0	765	36	77	233	0
Growth Adj:	1.07	1.07	1.07	1.07	1.07	1.07	1.07	1.07	1.07	1.07	1.07	1.07
Initial Bse:	0	0	0	632	977	1319	0	820	39	83	250	0
Added Vol:	0	0	0	46	0	159	0	85	0	0	0	0
Committed P:	0	0	0	0	0	0	0	0	0	0	0	0
Initial Fut:	0	0	0	678	977	1478	0	905	39	83	250	0
User Adj:	1.00	1.00	1.00	1.00	1.00	0.00	1.00	1.00	1.00	1.00	1.00	1.00
PHF Adj:	1.00	1.00	1.00	1.00	1.00	0.00	1.00	1.00	1.00	1.00	1.00	1.00
PHF Volume:	0	0	0	678	977	0	0	905	39	83	250	0
Reduct Vol:	0	0	0	0	0	0	0	0	0	0	0	0
Reduced Vol:	0	0	0	678	977	0	0	905	39	83	250	0
PCE Adj:	1.00	1.00	1.00	1.00	1.00	0.00	1.00	1.00	1.00	1.00	1.00	1.00
MLF Adj:	1.00	1.00	1.00	1.00	1.00	0.00	1.00	1.00	1.00	1.00	1.00	1.00
FinalVolume:	0	0	0	678	977	0	0	905	39	83	250	0
Saturation Flow Module:												
Sat/Lane:	1600	1600	1600	1600	1600	1600	1600	1600	1600	1600	1600	1600
Adjustment:	1.00	1.00	1.00	1.00	1.00	1.00	1.00	1.00	1.00	1.00	1.00	1.00
Lanes:	0.00	0.00	0.00	1.64	2.36	1.00	0.00	2.88	0.12	1.00	1.00	0.00
Final Sat.:	0	0	0	2624	3776	1600	0	4604	196	1600	1600	0
Capacity Analysis Module:												
Vol/Sat:	0.00	0.00	0.00	0.26	0.26	0.00	0.00	0.20	0.20	0.05	0.16	0.00
Crit Moves:				****				****		****		

Newport Banning Ranch
Year 2016 Cumulative Conditions without Project
PM Peak Hour

Level Of Service Computation Report
ICU 1(Loss as Cycle Length %) Method (Future Volume Alternative)

Intersection #26 Newport Blvd /Victoria St (22nd St) [Ramp]

Cycle (sec):	120	Critical Vol./Cap.(X):	0.653
Loss Time (sec):	0 (Y+R=4.0 sec)	Average Delay (sec/veh):	xxxxxx
Optimal Cycle:	54	Level Of Service:	B

Street Name:	Newport Boulevard						Victoria Street (22nd Street)					
Approach:	North Bound			South Bound			East Bound			West Bound		
Movement:	L - T - R			L - T - R			L - T - R			L - T - R		
Control:	Permitted			Permitted			Protected			Protected		
Rights:	Include			Include			Include			Include		
Min. Green:	0	0	0	0	0	0	0	0	0	0	0	0
Lanes:	0 1 2	0 1		0 0 0	0 0		2 0 2	0 0		0 0 1	0 1	
Volume Module:												
Base Vol:	109	907	92	0	0	0	734	601	0	0	202	203
Growth Adj:	1.07	1.07	1.07	1.07	1.07	1.07	1.07	1.07	1.07	1.07	1.07	1.07
Initial Bse:	117	972	99	0	0	0	787	644	0	0	217	218
Added Vol:	0	0	0	0	0	0	85	46	0	0	0	28
Committed P:	0	0	0	0	0	0	0	0	0	0	0	0
Initial Fut:	117	972	99	0	0	0	872	690	0	0	217	246
User Adj:	1.00	1.00	1.00	1.00	1.00	1.00	1.00	1.00	1.00	1.00	1.00	1.00
PHF Adj:	1.00	1.00	1.00	1.00	1.00	1.00	1.00	1.00	1.00	1.00	1.00	1.00
PHF Volume:	117	972	99	0	0	0	872	690	0	0	217	246
Reduct Vol:	0	0	0	0	0	0	0	0	0	0	0	0
Reduced Vol:	117	972	99	0	0	0	872	690	0	0	217	246
PCE Adj:	1.00	1.00	1.00	1.00	1.00	1.00	1.00	1.00	1.00	1.00	1.00	1.00
MLF Adj:	1.00	1.00	1.00	1.00	1.00	1.00	1.00	1.00	1.00	1.00	1.00	1.00
FinalVolume:	117	972	99	0	0	0	872	690	0	0	217	246
Saturation Flow Module:												
Sat/Lane:	1600	1600	1600	1600	1600	1600	1600	1600	1600	1600	1600	1600
Adjustment:	1.00	1.00	1.00	1.00	1.00	1.00	1.00	1.00	1.00	1.00	1.00	1.00
Lanes:	0.32	2.68	1.00	0.00	0.00	0.00	2.00	2.00	0.00	0.00	1.00	1.00
Final Sat.:	515	4285	1600	0	0	0	3200	3200	0	0	1600	1600
Capacity Analysis Module:												
Vol/Sat:	0.07	0.23	0.06	0.00	0.00	0.00	0.27	0.22	0.00	0.00	0.14	0.15
Crit Moves:		****					****					****

Newport Banning Ranch
Year 2016 Cumulative Conditions without Project
PM Peak Hour

Level Of Service Computation Report
2000 HCM 4-Way Stop Method (Future Volume Alternative)

Intersection #27 Whittier Ave/19th St

Cycle (sec):	100	Critical Vol./Cap.(X):	0.290
Loss Time (sec):	0 (Y+R=4.0 sec)	Average Delay (sec/veh):	9.2
Optimal Cycle:	0	Level Of Service:	A

Street Name:	Whittier Avenue						19th St					
Approach:	North Bound			South Bound			East Bound			West Bound		
Movement:	L -	T -	R	L -	T -	R	L -	T -	R	L -	T -	R
Control:	Stop Sign			Stop Sign			Stop Sign			Stop Sign		
Rights:	Include			Include			Include			Include		
Min. Green:	0	0	0	0	0	0	0	0	0	0	0	0
Lanes:	0 0	1! 0	0	0 1	0 0	0	1 0	0 1	0	1 0	0 1	0
Volume Module:												
Base Vol:	32	6	175	17	4	0	1	66	11	146	97	18
Growth Adj:	1.07	1.07	1.07	1.07	1.07	1.07	1.07	1.07	1.07	1.07	1.07	1.07
Initial Bse:	34	6	188	18	4	0	1	71	12	157	104	19
Added Vol:	0	0	0	0	0	0	0	0	0	0	0	0
Committed P:	0	0	0	0	0	0	0	0	0	0	0	0
Initial Fut:	34	6	188	18	4	0	1	71	12	157	104	19
User Adj:	1.00	1.00	1.00	1.00	1.00	1.00	1.00	1.00	1.00	1.00	1.00	1.00
PHF Adj:	1.00	1.00	1.00	1.00	1.00	1.00	1.00	1.00	1.00	1.00	1.00	1.00
PHF Volume:	34	6	188	18	4	0	1	71	12	157	104	19
Reduct Vol:	0	0	0	0	0	0	0	0	0	0	0	0
Reduced Vol:	34	6	188	18	4	0	1	71	12	157	104	19
PCE Adj:	1.00	1.00	1.00	1.00	1.00	1.00	1.00	1.00	1.00	1.00	1.00	1.00
MLF Adj:	1.00	1.00	1.00	1.00	1.00	1.00	1.00	1.00	1.00	1.00	1.00	1.00
FinalVolume:	34	6	188	18	4	0	1	71	12	157	104	19
Saturation Flow Module:												
Adjustment:	1.00	1.00	1.00	1.00	1.00	1.00	1.00	1.00	1.00	1.00	1.00	1.00
Lanes:	0.15	0.03	0.82	0.81	0.19	0.00	1.00	0.86	0.14	1.00	0.84	0.16
Final Sat.:	118	22	647	521	123	0	588	560	93	620	583	108
Capacity Analysis Module:												
Vol/Sat:	0.29	0.29	0.29	0.03	0.03	xxxx	0.00	0.13	0.13	0.25	0.18	0.18
Crit Moves:		****			****			****			****	
Delay/Veh:	9.0	9.0	9.0	8.4	8.4	0.0	8.6	8.7	8.7	10.2	8.8	8.8
Delay Adj:	1.00	1.00	1.00	1.00	1.00	1.00	1.00	1.00	1.00	1.00	1.00	1.00
AdjDel/Veh:	9.0	9.0	9.0	8.4	8.4	0.0	8.6	8.7	8.7	10.2	8.8	8.8
LOS by Move:	A	A	A	A	A	*	A	A	A	B	A	A
ApproachDel:		9.0			8.4			8.7			9.6	
Delay Adj:		1.00			1.00			1.00			1.00	
ApprAdjDel:		9.0			8.4			8.7			9.6	
LOS by Appr:		A			A			A			A	
AllWayAvgQ:	0.4	0.4	0.4	0.0	0.0	0.0	0.0	0.1	0.1	0.3	0.2	0.2

Newport Banning Ranch
Year 2016 Cumulative Conditions without Project
PM Peak Hour

Note: Queue reported is the number of cars per lane.

Newport Banning Ranch
Year 2016 Cumulative Conditions without Project
PM Peak Hour

Level Of Service Computation Report
2000 HCM 4-Way Stop Method (Future Volume Alternative)

Intersection #28 Monrovia Ave/19th St

Cycle (sec): 100 Critical Vol./Cap.(X): 0.558
Loss Time (sec): 0 (Y+R=4.0 sec) Average Delay (sec/veh): 14.5
Optimal Cycle: 0 Level Of Service: B

Street Name:	Monrovia Avenue						19th Street					
Approach:	North Bound			South Bound			East Bound			West Bound		
Movement:	L - T - R			L - T - R			L - T - R			L - T - R		
Control:	Stop Sign			Stop Sign			Stop Sign			Stop Sign		
Rights:	Include			Include			Include			Include		
Min. Green:	0	0	0	0	0	0	0	0	0	0	0	0
Lanes:	0 1	0 0	1	0 0	1!	0 0	1	0 1	0 1	1	0 1	0 1
Volume Module:												
Base Vol:	14	25	243	50	9	3	6	259	9	124	255	50
Growth Adj:	1.07	1.07	1.07	1.07	1.07	1.07	1.07	1.07	1.07	1.07	1.07	1.07
Initial Bse:	15	27	260	54	10	3	6	278	10	133	273	54
Added Vol:	0	13	11	0	13	0	0	0	0	9	0	0
Committed P:	0	0	0	0	0	0	0	0	0	0	0	0
Initial Fut:	15	40	271	54	23	3	6	278	10	142	273	54
User Adj:	1.00	1.00	1.00	1.00	1.00	1.00	1.00	1.00	1.00	1.00	1.00	1.00
PHF Adj:	1.00	1.00	1.00	1.00	1.00	1.00	1.00	1.00	1.00	1.00	1.00	1.00
PHF Volume:	15	40	271	54	23	3	6	278	10	142	273	54
Reduct Vol:	0	0	0	0	0	0	0	0	0	0	0	0
Reduced Vol:	15	40	271	54	23	3	6	278	10	142	273	54
PCE Adj:	1.00	1.00	1.00	1.00	1.00	1.00	1.00	1.00	1.00	1.00	1.00	1.00
MLF Adj:	1.00	1.00	1.00	1.00	1.00	1.00	1.00	1.00	1.00	1.00	1.00	1.00
FinalVolume:	15	40	271	54	23	3	6	278	10	142	273	54
Saturation Flow Module:												
Adjustment:	1.00	1.00	1.00	1.00	1.00	1.00	1.00	1.00	1.00	1.00	1.00	1.00
Lanes:	0.27	0.73	1.00	0.67	0.29	0.04	1.00	1.00	1.00	1.00	1.00	1.00
Final Sat.:	136	359	566	301	127	18	458	498	541	486	524	576
Capacity Analysis Module:												
Vol/Sat:	0.11	0.11	0.48	0.18	0.18	0.18	0.01	0.56	0.02	0.29	0.52	0.09
Crit Moves:			****		****			****			****	
Delay/Veh:	10.4	10.4	13.8	11.8	11.8	11.8	10.3	17.5	9.1	12.7	16.0	9.2
Delay Adj:	1.00	1.00	1.00	1.00	1.00	1.00	1.00	1.00	1.00	1.00	1.00	1.00
AdjDel/Veh:	10.4	10.4	13.8	11.8	11.8	11.8	10.3	17.5	9.1	12.7	16.0	9.2
LOS by Move:	B	B	B	B	B	B	B	C	A	B	C	A
ApproachDel:	13.2			11.8			17.1			14.2		
Delay Adj:	1.00			1.00			1.00			1.00		
ApprAdjDel:	13.2			11.8			17.1			14.2		
LOS by Appr:	B			B			C			B		
AllWayAvgQ:	0.1	0.1	0.8	0.2	0.2	0.2	0.0	1.1	0.0	0.4	1.0	0.1

Newport Banning Ranch
Year 2016 Cumulative Conditions without Project
PM Peak Hour

Note: Queue reported is the number of cars per lane.

Newport Banning Ranch
Year 2016 Cumulative Conditions without Project
PM Peak Hour

Level Of Service Computation Report
ICU 1(Loss as Cycle Length %) Method (Future Volume Alternative)

Intersection #29 Placentia Ave/19th St

Cycle (sec):	100	Critical Vol./Cap.(X):	0.762
Loss Time (sec):	0 (Y+R=4.0 sec)	Average Delay (sec/veh):	xxxxxx
Optimal Cycle:	96	Level Of Service:	C

Street Name:	Placentia Avenue						19th Street					
Approach:	North Bound			South Bound			East Bound			West Bound		
Movement:	L - T - R			L - T - R			L - T - R			L - T - R		
Control:	Protected			Protected			Protected			Protected		
Rights:	Include			Include			Include			Include		
Min. Green:	0	0	0	0	0	0	0	0	0	0	0	0
Lanes:	1 0 2	0 1		1 0 1	1 0		2 0 1	1 0		2 0 2	0 1	
Volume Module:												
Base Vol:	49	863	246	206	565	221	306	600	56	248	405	281
Growth Adj:	1.07	1.07	1.07	1.07	1.07	1.07	1.07	1.07	1.07	1.07	1.07	1.07
Initial Bse:	53	925	264	221	606	237	328	643	60	266	434	301
Added Vol:	0	81	4	0	85	0	0	11	0	7	9	8
Committed P:	1	5	1	0	0	0	0	0	0	0	0	0
Initial Fut:	54	1011	269	221	691	237	328	654	60	273	443	309
User Adj:	1.00	1.00	1.00	1.00	1.00	1.00	1.00	1.00	1.00	1.00	1.00	1.00
PHF Adj:	1.00	1.00	1.00	1.00	1.00	1.00	1.00	1.00	1.00	1.00	1.00	1.00
PHF Volume:	54	1011	269	221	691	237	328	654	60	273	443	309
Reduct Vol:	0	0	0	0	0	0	0	0	0	0	0	0
Reduced Vol:	54	1011	269	221	691	237	328	654	60	273	443	309
PCE Adj:	1.00	1.00	1.00	1.00	1.00	1.00	1.00	1.00	1.00	1.00	1.00	1.00
MLF Adj:	1.00	1.00	1.00	1.00	1.00	1.00	1.00	1.00	1.00	1.00	1.00	1.00
FinalVolume:	54	1011	269	221	691	237	328	654	60	273	443	309
Saturation Flow Module:												
Sat/Lane:	1600	1600	1600	1600	1600	1600	1600	1600	1600	1600	1600	1600
Adjustment:	1.00	1.00	1.00	1.00	1.00	1.00	1.00	1.00	1.00	1.00	1.00	1.00
Lanes:	1.00	2.00	1.00	1.00	1.49	0.51	2.00	1.83	0.17	2.00	2.00	1.00
Final Sat.:	1600	3200	1600	1600	2383	817	3200	2931	269	3200	3200	1600
Capacity Analysis Module:												
Vol/Sat:	0.03	0.32	0.17	0.14	0.29	0.29	0.10	0.22	0.22	0.09	0.14	0.19
Crit Moves:		****		****				****		****		

Newport Banning Ranch
Year 2016 Cumulative Conditions without Project
PM Peak Hour

Level Of Service Computation Report
ICU 1(Loss as Cycle Length %) Method (Future Volume Alternative)

Intersection #30 Pomona Ave/19th St

Cycle (sec): 100 Critical Vol./Cap.(X): 0.625
Loss Time (sec): 0 (Y+R=4.0 sec) Average Delay (sec/veh): xxxxxx
Optimal Cycle: 61 Level Of Service: B

Street Name:	Pomona Avenue						19th Street					
Approach:	North Bound			South Bound			East Bound			West Bound		
Movement:	L - T - R			L - T - R			L - T - R			L - T - R		
Control:	Protected			Protected			Prot+Permit			Prot+Permit		
Rights:	Include			Include			Include			Include		
Min. Green:	0	0	0	0	0	0	0	0	0	0	0	0
Lanes:	1 0 0	1 0		1 0 0	1 0		1 0 1	1 0		1 0 1	1 0	
Volume Module:												
Base Vol:	50	125	110	63	98	55	40	922	47	127	809	59
Growth Adj:	1.07	1.07	1.07	1.07	1.07	1.07	1.07	1.07	1.07	1.07	1.07	1.07
Initial Bse:	54	134	118	68	105	59	43	988	50	136	867	63
Added Vol:	0	5	5	1	7	0	0	16	0	6	24	0
Committed P:	0	0	0	0	0	0	0	0	0	0	0	0
Initial Fut:	54	139	123	69	112	59	43	1004	50	142	891	63
User Adj:	1.00	1.00	1.00	1.00	1.00	1.00	1.00	1.00	1.00	1.00	1.00	1.00
PHF Adj:	1.00	1.00	1.00	1.00	1.00	1.00	1.00	1.00	1.00	1.00	1.00	1.00
PHF Volume:	54	139	123	69	112	59	43	1004	50	142	891	63
Reduct Vol:	0	0	0	0	0	0	0	0	0	0	0	0
Reduced Vol:	54	139	123	69	112	59	43	1004	50	142	891	63
PCE Adj:	1.00	1.00	1.00	1.00	1.00	1.00	1.00	1.00	1.00	1.00	1.00	1.00
MLF Adj:	1.00	1.00	1.00	1.00	1.00	1.00	1.00	1.00	1.00	1.00	1.00	1.00
FinalVolume:	54	139	123	69	112	59	43	1004	50	142	891	63
Saturation Flow Module:												
Sat/Lane:	1600	1600	1600	1600	1600	1600	1600	1600	1600	1600	1600	1600
Adjustment:	1.00	1.00	1.00	1.00	1.00	1.00	1.00	1.00	1.00	1.00	1.00	1.00
Lanes:	1.00	0.53	0.47	1.00	0.66	0.34	1.00	1.90	0.10	1.00	1.87	0.13
Final Sat.:	1600	849	751	1600	1048	552	1600	3047	153	1600	2988	212
Capacity Analysis Module:												
Vol/Sat:	0.03	0.16	0.16	0.04	0.11	0.11	0.03	0.33	0.33	0.09	0.30	0.30
Crit Moves:		****		****				****		****		

Newport Banning Ranch
Year 2016 Cumulative Conditions without Project
PM Peak Hour

Level Of Service Computation Report
ICU 1(Loss as Cycle Length %) Method (Future Volume Alternative)

Intersection #31 Anaheim Ave/19th St

Cycle (sec):	100	Critical Vol./Cap.(X):	0.591
Loss Time (sec):	0 (Y+R=4.0 sec)	Average Delay (sec/veh):	xxxxxx
Optimal Cycle:	46	Level Of Service:	A

Street Name:	Anaheim Avenue						19th Street					
Approach:	North Bound			South Bound			East Bound			West Bound		
Movement:	L - T - R			L - T - R			L - T - R			L - T - R		
Control:	Permitted			Permitted			Prot+Permit			Prot+Permit		
Rights:	Include			Include			Include			Include		
Min. Green:	0	0	0	0	0	0	0	0	0	0	0	0
Lanes:	1 0 0	1 0		0 1 0	1 0		0 1 0	1 1 0		1 0 2	0 1	
Volume Module:												
Base Vol:	61	60	97	59	48	26	45	1023	53	118	947	109
Growth Adj:	1.07	1.07	1.07	1.07	1.07	1.07	1.07	1.07	1.07	1.07	1.07	1.07
Initial Bse:	65	64	104	63	51	28	48	1097	57	126	1015	117
Added Vol:	0	0	0	0	0	0	0	23	0	0	35	0
Committed P:	0	0	0	0	0	0	0	0	0	0	0	0
Initial Fut:	65	64	104	63	51	28	48	1120	57	126	1050	117
User Adj:	1.00	1.00	1.00	1.00	1.00	1.00	1.00	1.00	1.00	1.00	1.00	1.00
PHF Adj:	1.00	1.00	1.00	1.00	1.00	1.00	1.00	1.00	1.00	1.00	1.00	1.00
PHF Volume:	65	64	104	63	51	28	48	1120	57	126	1050	117
Reduct Vol:	0	0	0	0	0	0	0	0	0	0	0	0
Reduced Vol:	65	64	104	63	51	28	48	1120	57	126	1050	117
PCE Adj:	1.00	1.00	1.00	1.00	1.00	1.00	1.00	1.00	1.00	1.00	1.00	1.00
MLF Adj:	1.00	1.00	1.00	1.00	1.00	1.00	1.00	1.00	1.00	1.00	1.00	1.00
FinalVolume:	65	64	104	63	51	28	48	1120	57	126	1050	117
Saturation Flow Module:												
Sat/Lane:	1600	1600	1600	1600	1600	1600	1600	1600	1600	1600	1600	1600
Adjustment:	1.00	1.00	1.00	1.00	1.00	1.00	1.00	1.00	1.00	1.00	1.00	1.00
Lanes:	1.00	0.38	0.62	1.00	0.65	0.35	1.00	1.90	0.10	1.00	2.00	1.00
Final Sat.:	1600	611	989	1600	1038	562	1600	3045	155	1600	3200	1600
Capacity Analysis Module:												
Vol/Sat:	0.04	0.11	0.11	0.04	0.05	0.05	0.03	0.37	0.37	0.08	0.33	0.07
Crit Moves:		****		****				****		****		

Newport Banning Ranch
Year 2016 Cumulative Conditions without Project
PM Peak Hour

Level Of Service Computation Report
ICU 1(Loss as Cycle Length %) Method (Future Volume Alternative)

Intersection #32 Park Ave/19th St

Cycle (sec):	100	Critical Vol./Cap.(X):	0.590
Loss Time (sec):	0 (Y+R=4.0 sec)	Average Delay (sec/veh):	xxxxxx
Optimal Cycle:	45	Level Of Service:	A

Street Name:	Park Avenue						19th St					
Approach:	North Bound			South Bound			East Bound			West Bound		
Movement:	L - T - R			L - T - R			L - T - R			L - T - R		
Control:	Permitted			Permitted			Prot+Permit			Prot+Permit		
Rights:	Include			Include			Include			Include		
Min. Green:	0	0	0	0	0	0	0	0	0	0	0	0
Lanes:	2 0 0 0 1			0 0 0 0 0			1 0 2 0 1			1 0 3 0 0		
Volume Module:												
Base Vol:	119	0	153	0	0	0	20	1069	70	183	1034	0
Growth Adj:	1.07	1.07	1.07	1.07	1.07	1.07	1.07	1.07	1.07	1.07	1.07	1.07
Initial Bse:	128	0	164	0	0	0	21	1146	75	196	1108	0
Added Vol:	0	0	0	0	0	0	0	23	0	0	35	0
Committed P:	0	0	0	0	0	0	0	0	0	0	0	0
Initial Fut:	128	0	164	0	0	0	21	1169	75	196	1143	0
User Adj:	1.00	1.00	1.00	1.00	1.00	1.00	1.00	1.00	1.00	1.00	1.00	1.00
PHF Adj:	1.00	1.00	1.00	1.00	1.00	1.00	1.00	1.00	1.00	1.00	1.00	1.00
PHF Volume:	128	0	164	0	0	0	21	1169	75	196	1143	0
Reduct Vol:	0	0	0	0	0	0	0	0	0	0	0	0
Reduced Vol:	128	0	164	0	0	0	21	1169	75	196	1143	0
PCE Adj:	1.00	1.00	1.00	1.00	1.00	1.00	1.00	1.00	1.00	1.00	1.00	1.00
MLF Adj:	1.00	1.00	1.00	1.00	1.00	1.00	1.00	1.00	1.00	1.00	1.00	1.00
FinalVolume:	128	0	164	0	0	0	21	1169	75	196	1143	0
Saturation Flow Module:												
Sat/Lane:	1600	1600	1600	1600	1600	1600	1600	1600	1600	1600	1600	1600
Adjustment:	1.00	1.00	1.00	1.00	1.00	1.00	1.00	1.00	1.00	1.00	1.00	1.00
Lanes:	2.00	0.00	1.00	0.00	0.00	0.00	1.00	2.00	1.00	1.00	3.00	0.00
Final Sat.:	3200	0	1600	0	0	0	1600	3200	1600	1600	4800	0
Capacity Analysis Module:												
Vol/Sat:	0.04	0.00	0.10	0.00	0.00	0.00	0.01	0.37	0.05	0.12	0.24	0.00
Crit Moves:			****					****		****		

Newport Banning Ranch
Year 2016 Cumulative Conditions without Project
PM Peak Hour

Level Of Service Computation Report
ICU 1(Loss as Cycle Length %) Method (Future Volume Alternative)

Intersection #33 Harbor Blvd/19th St

Cycle (sec):	100	Critical Vol./Cap.(X):	0.630
Loss Time (sec):	0 (Y+R=4.0 sec)	Average Delay (sec/veh):	xxxxxx
Optimal Cycle:	62	Level Of Service:	B

Street Name:	Harbor Boulevard						19th Street					
Approach:	North Bound			South Bound			East Bound			West Bound		
Movement:	L - T - R			L - T - R			L - T - R			L - T - R		
Control:	Protected			Protected			Protected			Protected		
Rights:	Include			Include			Include			Include		
Min. Green:	0	0	0	0	0	0	0	0	0	0	0	0
Lanes:	1 0 2	1 0		1 0 2	0 1		2 0 2	1 0		1 0 3	0 1	
Volume Module:												
Base Vol:	75	453	23	183	614	317	481	749	65	188	791	215
Growth Adj:	1.07	1.07	1.07	1.07	1.07	1.07	1.07	1.07	1.07	1.07	1.07	1.07
Initial Bse:	80	486	25	196	658	340	516	803	70	202	848	230
Added Vol:	10	14	0	3	7	23	20	1	2	0	2	5
Committed P:	3	11	0	0	24	0	0	0	6	0	0	0
Initial Fut:	93	511	25	199	689	363	536	804	78	202	850	235
User Adj:	1.00	1.00	1.00	1.00	1.00	1.00	1.00	1.00	1.00	1.00	1.00	1.00
PHF Adj:	1.00	1.00	1.00	1.00	1.00	1.00	1.00	1.00	1.00	1.00	1.00	1.00
PHF Volume:	93	511	25	199	689	363	536	804	78	202	850	235
Reduct Vol:	0	0	0	0	0	0	0	0	0	0	0	0
Reduced Vol:	93	511	25	199	689	363	536	804	78	202	850	235
PCE Adj:	1.00	1.00	1.00	1.00	1.00	1.00	1.00	1.00	1.00	1.00	1.00	1.00
MLF Adj:	1.00	1.00	1.00	1.00	1.00	1.00	1.00	1.00	1.00	1.00	1.00	1.00
FinalVolume:	93	511	25	199	689	363	536	804	78	202	850	235
Saturation Flow Module:												
Sat/Lane:	1600	1600	1600	1600	1600	1600	1600	1600	1600	1600	1600	1600
Adjustment:	1.00	1.00	1.00	1.00	1.00	1.00	1.00	1.00	1.00	1.00	1.00	1.00
Lanes:	1.00	2.86	0.14	1.00	2.00	1.00	2.00	2.74	0.26	1.00	3.00	1.00
Final Sat.:	1600	4579	221	1600	3200	1600	3200	4377	423	1600	4800	1600
Capacity Analysis Module:												
Vol/Sat:	0.06	0.11	0.11	0.12	0.22	0.23	0.17	0.18	0.18	0.13	0.18	0.15
Crit Moves:	****					****	****				****	

Newport Banning Ranch
Year 2016 Cumulative Conditions without Project
PM Peak Hour

Level Of Service Computation Report
ICU 1(Loss as Cycle Length %) Method (Future Volume Alternative)

Intersection #34 Newport Blvd/19th St

Cycle (sec):	120	Critical Vol./Cap.(X):	0.839
Loss Time (sec):	0 (Y+R=4.0 sec)	Average Delay (sec/veh):	xxxxxx
Optimal Cycle:	141	Level Of Service:	D

Street Name:	Newport Boulevard						19th Street					
Approach:	North Bound			South Bound			East Bound			West Bound		
Movement:	L - T - R			L - T - R			L - T - R			L - T - R		
Control:	Protected			Protected			Split Phase			Split Phase		
Rights:	Include			Include			Include			Include		
Min. Green:	0	0	0	0	0	0	0	0	0	0	0	0
Lanes:	1 0 3	1 0		1 0 3	1 1		2 1 1	0 1		1 0 2	1 1	
Volume Module:												
Base Vol:	65	2649	38	202	3114	757	731	171	33	54	321	152
Growth Adj:	1.07	1.07	1.07	1.07	1.07	1.07	1.07	1.07	1.07	1.07	1.07	1.07
Initial Bse:	70	2840	41	217	3338	812	784	183	35	58	344	163
Added Vol:	0	33	9	0	28	2	1	3	0	0	5	0
Committed P:	0	21	0	0	31	0	0	0	11	0	0	0
Initial Fut:	70	2894	50	217	3397	814	785	186	46	58	349	163
User Adj:	1.00	1.00	1.00	1.00	1.00	1.00	1.00	1.00	1.00	1.00	1.00	1.00
PHF Adj:	1.00	1.00	1.00	1.00	1.00	1.00	1.00	1.00	1.00	1.00	1.00	1.00
PHF Volume:	70	2894	50	217	3397	814	785	186	46	58	349	163
Reduct Vol:	0	0	0	0	0	0	0	0	0	0	0	0
Reduced Vol:	70	2894	50	217	3397	814	785	186	46	58	349	163
PCE Adj:	1.00	1.00	1.00	1.00	1.00	1.00	1.00	1.00	1.00	1.00	1.00	1.00
MLF Adj:	1.00	1.00	1.00	1.00	1.00	1.00	1.00	1.00	1.00	1.00	1.00	1.00
FinalVolume:	70	2894	50	217	3397	814	785	186	46	58	349	163
Saturation Flow Module:												
Sat/Lane:	1600	1600	1600	1600	1600	1600	1600	1600	1600	1600	1600	1600
Adjustment:	1.00	1.00	1.00	1.00	1.00	1.00	1.00	1.00	1.00	1.00	1.00	1.00
Lanes:	1.00	3.93	0.07	1.00	4.00	1.00	3.00	1.00	1.00	1.00	2.73	1.27
Final Sat.:	1600	6292	108	1600	6400	1600	4800	1600	1600	1600	4363	2037
Capacity Analysis Module:												
Vol/Sat:	0.04	0.46	0.46	0.14	0.53	0.51	0.16	0.12	0.03	0.04	0.08	0.08
Crit Moves:		****		****			****				****	

Newport Banning Ranch
Year 2016 Cumulative Conditions without Project
PM Peak Hour

Level Of Service Computation Report
ICU 1(Loss as Cycle Length %) Method (Future Volume Alternative)

Intersection #35 Newport Blvd/Broadway

Cycle (sec):	120	Critical Vol./Cap.(X):	0.797
Loss Time (sec):	0 (Y+R=4.0 sec)	Average Delay (sec/veh):	xxxxxx
Optimal Cycle:	92	Level Of Service:	C

Street Name:	Newport Boulevard									Broadway								
Approach:	North Bound			South Bound			East Bound			West Bound		
Movement:	L	- T	- R	L	- T	- R	L	- T	- R	L	- T	- R
Control:	Protected			Protected			Permitted			Permitted		
Rights:	Include			Include			Include			Include		
Min. Green:	0	0	0	0	0	0	0	0	0	0	0	0
Lanes:	1 0	3 1	0	1 0	3 0	1	0 1	0 0	1	1 0	0 1	0
Volume Module:												
Base Vol:	7	2542	55	142	3061	62	18	23	14	33	15	95
Growth Adj:	1.07	1.07	1.07	1.07	1.07	1.07	1.07	1.07	1.07	1.07	1.07	1.07
Initial Bse:	8	2725	59	152	3281	66	19	25	15	35	16	102
Added Vol:	2	33	0	0	28	0	9	0	2	0	0	0
Committed P:	0	25	0	0	48	0	0	0	0	0	0	0
Initial Fut:	10	2783	59	152	3357	66	28	25	17	35	16	102
User Adj:	1.00	1.00	1.00	1.00	1.00	1.00	1.00	1.00	1.00	1.00	1.00	1.00
PHF Adj:	1.00	1.00	1.00	1.00	1.00	1.00	1.00	1.00	1.00	1.00	1.00	1.00
PHF Volume:	10	2783	59	152	3357	66	28	25	17	35	16	102
Reduct Vol:	0	0	0	0	0	0	0	0	0	0	0	0
Reduced Vol:	10	2783	59	152	3357	66	28	25	17	35	16	102
PCE Adj:	1.00	1.00	1.00	1.00	1.00	1.00	1.00	1.00	1.00	1.00	1.00	1.00
MLF Adj:	1.00	1.00	1.00	1.00	1.00	1.00	1.00	1.00	1.00	1.00	1.00	1.00
FinalVolume:	10	2783	59	152	3357	66	28	25	17	35	16	102
Saturation Flow Module:												
Sat/Lane:	1600	1600	1600	1600	1600	1600	1600	1600	1600	1600	1600	1600
Adjustment:	1.00	1.00	1.00	1.00	1.00	1.00	1.00	1.00	1.00	1.00	1.00	1.00
Lanes:	1.00	3.92	0.08	1.00	3.00	1.00	0.53	0.47	1.00	1.00	0.14	0.86
Final Sat.:	1600	6267	133	1600	4800	1600	855	745	1600	1600	218	1382
Capacity Analysis Module:												
Vol/Sat:	0.01	0.44	0.44	0.10	0.70	0.04	0.02	0.03	0.01	0.02	0.07	0.07
Crit Moves:	****				****		****				****	

Newport Banning Ranch
Year 2016 Cumulative Conditions without Project
PM Peak Hour

Level Of Service Computation Report
ICU 1(Loss as Cycle Length %) Method (Future Volume Alternative)

Intersection #36 Newport Blvd/Harbor Blvd

Cycle (sec):	120	Critical Vol./Cap.(X):	1.069
Loss Time (sec):	0 (Y+R=4.0 sec)	Average Delay (sec/veh):	xxxxxx
Optimal Cycle:	180	Level Of Service:	F

Street Name:	Newport Boulevard						Harbor Boulevard					
Approach:	North Bound			South Bound			East Bound			West Bound		
Movement:	L - T - R			L - T - R			L - T - R			L - T - R		
Control:	Protected			Protected			Protected			Protected		
Rights:	Include			Include			Ovl			Include		
Min. Green:	0	0	0	0	0	0	0	0	0	0	0	0
Lanes:	2 0 4 0 0			0 0 2 1 0			1 0 0 0 2			0 0 0 0 0		
Volume Module:												
Base Vol:	726	2480	0	0	3160	50	123	0	537	0	0	0
Growth Adj:	1.07	1.07	1.07	1.07	1.07	1.07	1.07	1.07	1.07	1.07	1.07	1.07
Initial Bse:	778	2659	0	0	3388	54	132	0	576	0	0	0
Added Vol:	5	35	0	0	30	0	0	0	4	0	0	0
Committed P:	27	28	0	0	51	0	0	0	50	0	0	0
Initial Fut:	810	2722	0	0	3469	54	132	0	630	0	0	0
User Adj:	1.00	1.00	1.00	1.00	1.00	1.00	1.00	1.00	1.00	1.00	1.00	1.00
PHF Adj:	1.00	1.00	1.00	1.00	1.00	1.00	1.00	1.00	1.00	1.00	1.00	1.00
PHF Volume:	810	2722	0	0	3469	54	132	0	630	0	0	0
Reduct Vol:	0	0	0	0	0	0	0	0	0	0	0	0
Reduced Vol:	810	2722	0	0	3469	54	132	0	630	0	0	0
PCE Adj:	1.00	1.00	1.00	1.00	1.00	1.00	1.00	1.00	1.00	1.00	1.00	1.00
MLF Adj:	1.00	1.00	1.00	1.00	1.00	1.00	1.00	1.00	1.00	1.00	1.00	1.00
FinalVolume:	810	2722	0	0	3469	54	132	0	630	0	0	0
OvlAdjVol:									0			
Saturation Flow Module:												
Sat/Lane:	1600	1600	1600	1600	1600	1600	1600	1600	1600	1600	1600	1600
Adjustment:	1.00	1.00	1.00	1.00	1.00	1.00	1.00	1.00	1.00	1.00	1.00	1.00
Lanes:	2.00	4.00	0.00	0.00	2.95	0.05	1.00	0.00	2.00	0.00	0.00	0.00
Final Sat.:	3200	6400	0	0	4727	73	1600	0	3200	0	0	0
Capacity Analysis Module:												
Vol/Sat:	0.25	0.43	0.00	0.00	0.73	0.73	0.08	0.00	0.20	0.00	0.00	0.00
OvlAdjV/S:									0.00			
Crit Moves:	****				****		****					

Newport Banning Ranch
Year 2016 Cumulative Conditions without Project
PM Peak Hour

Level Of Service Computation Report
ICU 1(Loss as Cycle Length %) Method (Future Volume Alternative)

Intersection #37 Newport Blvd/18th St (Rochester St)

Cycle (sec):	120	Critical Vol./Cap.(X):	1.080
Loss Time (sec):	0 (Y+R=4.0 sec)	Average Delay (sec/veh):	xxxxxx
Optimal Cycle:	180	Level Of Service:	F

Street Name:	Newport Boulevard						18th Street (Rochester Street)					
Approach:	North Bound			South Bound			East Bound			West Bound		
Movement:	L - T - R			L - T - R			L - T - R			L - T - R		
Control:	Protected			Protected			Split Phase			Split Phase		
Rights:	Include			Include			Include			Include		
Min. Green:	0	0	0	0	0	0	0	0	0	0	0	0
Lanes:	1 0 3	1 0		1 0 3	0 1		2 0 1	0 1		1 0 0	1 0	
Volume Module:												
Base Vol:	111	2724	15	125	3515	144	251	75	48	18	124	22
Growth Adj:	1.07	1.07	1.07	1.07	1.07	1.07	1.07	1.07	1.07	1.07	1.07	1.07
Initial Bse:	119	2920	16	134	3768	154	269	80	51	19	133	24
Added Vol:	0	30	0	0	18	15	10	0	0	0	0	0
Committed P:	14	68	0	0	111	0	0	0	21	0	0	0
Initial Fut:	133	3018	16	134	3897	169	279	80	72	19	133	24
User Adj:	1.00	1.00	1.00	1.00	1.00	1.00	1.00	1.00	1.00	1.00	1.00	1.00
PHF Adj:	1.00	1.00	1.00	1.00	1.00	1.00	1.00	1.00	1.00	1.00	1.00	1.00
PHF Volume:	133	3018	16	134	3897	169	279	80	72	19	133	24
Reduct Vol:	0	0	0	0	0	0	0	0	0	0	0	0
Reduced Vol:	133	3018	16	134	3897	169	279	80	72	19	133	24
PCE Adj:	1.00	1.00	1.00	1.00	1.00	1.00	1.00	1.00	1.00	1.00	1.00	1.00
MLF Adj:	1.00	1.00	1.00	1.00	1.00	1.00	1.00	1.00	1.00	1.00	1.00	1.00
FinalVolume:	133	3018	16	134	3897	169	279	80	72	19	133	24
Saturation Flow Module:												
Sat/Lane:	1600	1600	1600	1600	1600	1600	1600	1600	1600	1600	1600	1600
Adjustment:	1.00	1.00	1.00	1.00	1.00	1.00	1.00	1.00	1.00	1.00	1.00	1.00
Lanes:	1.00	3.98	0.02	1.00	3.00	1.00	2.00	1.00	1.00	1.00	0.85	0.15
Final Sat.:	1600	6366	34	1600	4800	1600	3200	1600	1600	1600	1359	241
Capacity Analysis Module:												
Vol/Sat:	0.08	0.47	0.47	0.08	0.81	0.11	0.09	0.05	0.05	0.01	0.10	0.10
Crit Moves:	****				****		****					****

Newport Banning Ranch
Year 2016 Cumulative Conditions without Project
PM Peak Hour

Level Of Service Computation Report
ICU 1(Loss as Cycle Length %) Method (Future Volume Alternative)

Intersection #38 Placentia Ave/18th St

Cycle (sec):	100	Critical Vol./Cap.(X):	0.535
Loss Time (sec):	0 (Y+R=4.0 sec)	Average Delay (sec/veh):	xxxxxx
Optimal Cycle:	40	Level Of Service:	A

Street Name:	Placentia Avenue						18th Street					
Approach:	North Bound			South Bound			East Bound			West Bound		
Movement:	L - T - R			L - T - R			L - T - R			L - T - R		
Control:	Protected			Protected			Permitted			Permitted		
Rights:	Include			Include			Include			Include		
Min. Green:	0	0	0	0	0	0	0	0	0	0	0	0
Lanes:	1 0	1 1	0	1 0	1 1	0	1 0	0 1	0	1 0	0 1	0
Volume Module:												
Base Vol:	14	889	58	45	523	47	60	169	27	16	87	80
Growth Adj:	1.06	1.06	1.06	1.06	1.06	1.06	1.06	1.06	1.06	1.06	1.06	1.06
Initial Bse:	15	944	62	48	555	50	64	179	29	17	92	85
Added Vol:	0	81	0	0	85	7	4	10	0	0	15	0
Committed P:	1	10	1	0	1	0	0	0	0	0	0	0
Initial Fut:	16	1035	63	48	641	57	68	189	29	17	107	85
User Adj:	1.00	1.00	1.00	1.00	1.00	1.00	1.00	1.00	1.00	1.00	1.00	1.00
PHF Adj:	1.00	1.00	1.00	1.00	1.00	1.00	1.00	1.00	1.00	1.00	1.00	1.00
PHF Volume:	16	1035	63	48	641	57	68	189	29	17	107	85
Reduct Vol:	0	0	0	0	0	0	0	0	0	0	0	0
Reduced Vol:	16	1035	63	48	641	57	68	189	29	17	107	85
PCE Adj:	1.00	1.00	1.00	1.00	1.00	1.00	1.00	1.00	1.00	1.00	1.00	1.00
MLF Adj:	1.00	1.00	1.00	1.00	1.00	1.00	1.00	1.00	1.00	1.00	1.00	1.00
FinalVolume:	16	1035	63	48	641	57	68	189	29	17	107	85
Saturation Flow Module:												
Sat/Lane:	1600	1600	1600	1600	1600	1600	1600	1600	1600	1600	1600	1600
Adjustment:	1.00	1.00	1.00	1.00	1.00	1.00	1.00	1.00	1.00	1.00	1.00	1.00
Lanes:	1.00	1.89	0.11	1.00	1.84	0.16	1.00	0.87	0.13	1.00	0.56	0.44
Final Sat.:	1600	3018	182	1600	2939	261	1600	1390	210	1600	893	707
Capacity Analysis Module:												
Vol/Sat:	0.01	0.34	0.34	0.03	0.22	0.22	0.04	0.14	0.14	0.01	0.12	0.12
Crit Moves:		****		****			****				****	

Newport Banning Ranch
Year 2016 Cumulative Conditions without Project
PM Peak Hour

Level Of Service Computation Report
2000 HCM 4-Way Stop Method (Future Volume Alternative)

Intersection #39 Whittier Ave/17th St

Cycle (sec):	100	Critical Vol./Cap.(X):	0.118
Loss Time (sec):	0 (Y+R=4.0 sec)	Average Delay (sec/veh):	7.4
Optimal Cycle:	0	Level Of Service:	A

Street Name:	Whittier Avenue						17th St					
Approach:	North Bound			South Bound			East Bound			West Bound		
Movement:	L -	T -	R	L -	T -	R	L -	T -	R	L -	T -	R
Control:	Stop Sign			Stop Sign			Stop Sign			Stop Sign		
Rights:	Include			Include			Include			Include		
Min. Green:	0	0	0	0	0	0	0	0	0	0	0	0
Lanes:	0 0	0 1	0	0 0	1! 0	0	0 1	0 0	0	0 0	1! 0	0
Volume Module:												
Base Vol:	0	11	8	62	9	3	2	14	0	14	9	83
Growth Adj:	1.06	1.06	1.06	1.06	1.06	1.06	1.06	1.06	1.06	1.06	1.06	1.06
Initial Bse:	0	12	8	66	10	3	2	15	0	15	10	88
Added Vol:	0	0	0	0	0	0	0	0	0	0	0	0
Committed P:	0	0	0	0	0	0	0	0	0	0	0	0
Initial Fut:	0	12	8	66	10	3	2	15	0	15	10	88
User Adj:	1.00	1.00	1.00	1.00	1.00	1.00	1.00	1.00	1.00	1.00	1.00	1.00
PHF Adj:	1.00	1.00	1.00	1.00	1.00	1.00	1.00	1.00	1.00	1.00	1.00	1.00
PHF Volume:	0	12	8	66	10	3	2	15	0	15	10	88
Reduct Vol:	0	0	0	0	0	0	0	0	0	0	0	0
Reduced Vol:	0	12	8	66	10	3	2	15	0	15	10	88
PCE Adj:	1.00	1.00	1.00	1.00	1.00	1.00	1.00	1.00	1.00	1.00	1.00	1.00
MLF Adj:	1.00	1.00	1.00	1.00	1.00	1.00	1.00	1.00	1.00	1.00	1.00	1.00
FinalVolume:	0	12	8	66	10	3	2	15	0	15	10	88
Saturation Flow Module:												
Adjustment:	1.00	1.00	1.00	1.00	1.00	1.00	1.00	1.00	1.00	1.00	1.00	1.00
Lanes:	0.00	0.58	0.42	0.84	0.12	0.04	0.12	0.88	0.00	0.13	0.08	0.79
Final Sat.:	0	507	369	681	99	33	103	724	0	126	81	747
Capacity Analysis Module:												
Vol/Sat:	xxxx	0.02	0.02	0.10	0.10	0.10	0.02	0.02	xxxx	0.12	0.12	0.12
Crit Moves:		****			****			****			****	
Delay/Veh:	0.0	7.1	7.1	7.8	7.8	7.8	7.3	7.3	0.0	7.2	7.2	7.2
Delay Adj:	1.00	1.00	1.00	1.00	1.00	1.00	1.00	1.00	1.00	1.00	1.00	1.00
AdjDel/Veh:	0.0	7.1	7.1	7.8	7.8	7.8	7.3	7.3	0.0	7.2	7.2	7.2
LOS by Move:	*	A	A	A	A	A	A	A	*	A	A	A
ApproachDel:		7.1			7.8			7.3			7.2	
Delay Adj:		1.00			1.00			1.00			1.00	
ApprAdjDel:		7.1			7.8			7.3			7.2	
LOS by Appr:		A			A			A			A	
AllWayAvgQ:	0.0	0.0	0.0	0.1	0.1	0.1	0.0	0.0	0.0	0.1	0.1	0.1

Newport Banning Ranch
Year 2016 Cumulative Conditions without Project
PM Peak Hour

Note: Queue reported is the number of cars per lane.

Newport Banning Ranch
Year 2016 Cumulative Conditions without Project
PM Peak Hour

Level Of Service Computation Report
2000 HCM 4-Way Stop Method (Future Volume Alternative)

Intersection #40 Monrovia Ave/17th St

Cycle (sec): 100 Critical Vol./Cap.(X): 0.389
Loss Time (sec): 0 (Y+R=4.0 sec) Average Delay (sec/veh): 9.9
Optimal Cycle: 0 Level Of Service: A

Street Name:	Monrovia Avenue						17th Street					
Approach:	North Bound			South Bound			East Bound			West Bound		
Movement:	L -	T -	R	L -	T -	R	L -	T -	R	L -	T -	R
Control:	Stop Sign			Stop Sign			Stop Sign			Stop Sign		
Rights:	Include			Include			Include			Include		
Min. Green:	0	0	0	0	0	0	0	0	0	0	0	0
Lanes:	0 0	1! 0	0	0 0	1! 0	0	0 0	1! 0	0	0 0	1! 0	0
Volume Module:												
Base Vol:	25	120	46	43	65	12	14	79	43	21	77	47
Growth Adj:	1.06	1.06	1.06	1.06	1.06	1.06	1.06	1.06	1.06	1.06	1.06	1.06
Initial Bse:	27	127	49	46	69	13	15	84	46	22	82	50
Added Vol:	0	27	50	0	25	0	0	0	0	40	0	0
Committed P:	0	0	0	0	0	0	0	0	0	0	0	0
Initial Fut:	27	154	99	46	94	13	15	84	46	62	82	50
User Adj:	1.00	1.00	1.00	1.00	1.00	1.00	1.00	1.00	1.00	1.00	1.00	1.00
PHF Adj:	1.00	1.00	1.00	1.00	1.00	1.00	1.00	1.00	1.00	1.00	1.00	1.00
PHF Volume:	27	154	99	46	94	13	15	84	46	62	82	50
Reduct Vol:	0	0	0	0	0	0	0	0	0	0	0	0
Reduced Vol:	27	154	99	46	94	13	15	84	46	62	82	50
PCE Adj:	1.00	1.00	1.00	1.00	1.00	1.00	1.00	1.00	1.00	1.00	1.00	1.00
MLF Adj:	1.00	1.00	1.00	1.00	1.00	1.00	1.00	1.00	1.00	1.00	1.00	1.00
FinalVolume:	27	154	99	46	94	13	15	84	46	62	82	50
Saturation Flow Module:												
Adjustment:	1.00	1.00	1.00	1.00	1.00	1.00	1.00	1.00	1.00	1.00	1.00	1.00
Lanes:	0.09	0.56	0.35	0.30	0.62	0.08	0.10	0.58	0.32	0.32	0.42	0.26
Final Sat.:	68	397	254	197	405	55	68	382	208	214	280	171
Capacity Analysis Module:												
Vol/Sat:	0.39	0.39	0.39	0.23	0.23	0.23	0.22	0.22	0.22	0.29	0.29	0.29
Crit Moves:		****		****					****			****
Delay/Veh:	10.5	10.5	10.5	9.5	9.5	9.5	9.3	9.3	9.3	9.9	9.9	9.9
Delay Adj:	1.00	1.00	1.00	1.00	1.00	1.00	1.00	1.00	1.00	1.00	1.00	1.00
AdjDel/Veh:	10.5	10.5	10.5	9.5	9.5	9.5	9.3	9.3	9.3	9.9	9.9	9.9
LOS by Move:	B	B	B	A	A	A	A	A	A	A	A	A
ApproachDel:	10.5			9.5			9.3			9.9		
Delay Adj:	1.00			1.00			1.00			1.00		
ApprAdjDel:	10.5			9.5			9.3			9.9		
LOS by Appr:	B			A			A			A		
AllWayAvgQ:	0.6	0.6	0.6	0.3	0.3	0.3	0.2	0.2	0.2	0.3	0.3	0.3

Newport Banning Ranch
Year 2016 Cumulative Conditions without Project
PM Peak Hour

Note: Queue reported is the number of cars per lane.

Newport Banning Ranch
Year 2016 Cumulative Conditions without Project
PM Peak Hour

Level Of Service Computation Report
ICU 1(Loss as Cycle Length %) Method (Future Volume Alternative)

Intersection #41 Placentia Ave/17th St

Cycle (sec):	100	Critical Vol./Cap.(X):	0.602
Loss Time (sec):	0 (Y+R=4.0 sec)	Average Delay (sec/veh):	xxxxxx
Optimal Cycle:	36	Level Of Service:	B

Street Name:	Placentia Avenue						17th St					
Approach:	North Bound			South Bound			East Bound			West Bound		
Movement:	L - T - R			L - T - R			L - T - R			L - T - R		
Control:	Permitted			Permitted			Permitted			Permitted		
Rights:	Include			Include			Include			Include		
Min. Green:	0	0	0	0	0	0	0	0	0	0	0	0
Lanes:	1 0	1 1	0	1 0	1 1	0	1 0	0 1	0	1 0	0 1	0
Volume Module:												
Base Vol:	49	668	69	113	387	26	52	151	34	37	108	187
Growth Adj:	1.06	1.06	1.06	1.06	1.06	1.06	1.06	1.06	1.06	1.06	1.06	1.06
Initial Bse:	52	709	73	120	411	28	55	160	36	39	115	199
Added Vol:	0	39	11	0	51	34	42	8	0	6	7	0
Committed P:	4	15	4	0	4	0	0	0	2	0	0	0
Initial Fut:	56	763	88	120	466	62	97	168	38	45	122	199
User Adj:	1.00	1.00	1.00	1.00	1.00	1.00	1.00	1.00	1.00	1.00	1.00	1.00
PHF Adj:	1.00	1.00	1.00	1.00	1.00	1.00	1.00	1.00	1.00	1.00	1.00	1.00
PHF Volume:	56	763	88	120	466	62	97	168	38	45	122	199
Reduct Vol:	0	0	0	0	0	0	0	0	0	0	0	0
Reduced Vol:	56	763	88	120	466	62	97	168	38	45	122	199
PCE Adj:	1.00	1.00	1.00	1.00	1.00	1.00	1.00	1.00	1.00	1.00	1.00	1.00
MLF Adj:	1.00	1.00	1.00	1.00	1.00	1.00	1.00	1.00	1.00	1.00	1.00	1.00
FinalVolume:	56	763	88	120	466	62	97	168	38	45	122	199
Saturation Flow Module:												
Sat/Lane:	1600	1600	1600	1600	1600	1600	1600	1600	1600	1600	1600	1600
Adjustment:	1.00	1.00	1.00	1.00	1.00	1.00	1.00	1.00	1.00	1.00	1.00	1.00
Lanes:	1.00	1.79	0.21	1.00	1.77	0.23	1.00	0.82	0.18	1.00	0.38	0.62
Final Sat.:	1600	2868	332	1600	2826	374	1600	1305	295	1600	608	992
Capacity Analysis Module:												
Vol/Sat:	0.04	0.27	0.27	0.07	0.16	0.16	0.06	0.13	0.13	0.03	0.20	0.20
Crit Moves:		****		****			****				****	

Newport Banning Ranch
Year 2016 Cumulative Conditions without Project
PM Peak Hour

Level Of Service Computation Report
2000 HCM 4-Way Stop Method (Future Volume Alternative)

Intersection #42 Pomona Ave/17th St

Cycle (sec):	100	Critical Vol./Cap.(X):	0.681
Loss Time (sec):	0 (Y+R=4.0 sec)	Average Delay (sec/veh):	16.6
Optimal Cycle:	0	Level Of Service:	C

Street Name:	Pomona Avenue						17th Street					
Approach:	North Bound			South Bound			East Bound			West Bound		
Movement:	L -	T -	R	L -	T -	R	L -	T -	R	L -	T -	R
Control:	Stop Sign			Stop Sign			Stop Sign			Stop Sign		
Rights:	Include			Include			Include			Include		
Min. Green:	0	0	0	0	0	0	0	0	0	0	0	0
Lanes:	0 0	1! 0	0	0 0	1! 0	0	1 0	0 1	0	1 0	1 0	1
Volume Module:												
Base Vol:	20	130	53	65	86	32	52	308	16	43	297	102
Growth Adj:	1.07	1.07	1.07	1.07	1.07	1.07	1.07	1.07	1.07	1.07	1.07	1.07
Initial Bse:	21	139	57	70	92	34	56	330	17	46	318	109
Added Vol:	0	0	0	12	0	0	0	12	0	0	16	10
Committed P:	0	0	0	0	0	0	0	0	0	0	0	0
Initial Fut:	21	139	57	82	92	34	56	342	17	46	334	119
User Adj:	1.00	1.00	1.00	1.00	1.00	1.00	1.00	1.00	1.00	1.00	1.00	1.00
PHF Adj:	1.00	1.00	1.00	1.00	1.00	1.00	1.00	1.00	1.00	1.00	1.00	1.00
PHF Volume:	21	139	57	82	92	34	56	342	17	46	334	119
Reduct Vol:	0	0	0	0	0	0	0	0	0	0	0	0
Reduced Vol:	21	139	57	82	92	34	56	342	17	46	334	119
PCE Adj:	1.00	1.00	1.00	1.00	1.00	1.00	1.00	1.00	1.00	1.00	1.00	1.00
MLF Adj:	1.00	1.00	1.00	1.00	1.00	1.00	1.00	1.00	1.00	1.00	1.00	1.00
FinalVolume:	21	139	57	82	92	34	56	342	17	46	334	119
Saturation Flow Module:												
Adjustment:	1.00	1.00	1.00	1.00	1.00	1.00	1.00	1.00	1.00	1.00	1.00	1.00
Lanes:	0.10	0.64	0.26	0.39	0.45	0.16	1.00	0.95	0.05	1.00	1.00	1.00
Final Sat.:	49	318	130	191	215	80	487	503	25	492	531	589
Capacity Analysis Module:												
Vol/Sat:	0.44	0.44	0.44	0.43	0.43	0.43	0.11	0.68	0.68	0.09	0.63	0.20
Crit Moves:		****		****				****			****	
Delay/Veh:	14.1	14.1	14.1	14.1	14.1	14.1	10.7	21.3	21.3	10.5	19.1	10.0
Delay Adj:	1.00	1.00	1.00	1.00	1.00	1.00	1.00	1.00	1.00	1.00	1.00	1.00
AdjDel/Veh:	14.1	14.1	14.1	14.1	14.1	14.1	10.7	21.3	21.3	10.5	19.1	10.0
LOS by Move:	B	B	B	B	B	B	B	C	C	B	C	B
ApproachDel:		14.1			14.1			19.9			16.1	
Delay Adj:		1.00			1.00			1.00			1.00	
ApprAdjDel:		14.1			14.1			19.9			16.1	
LOS by Appr:		B			B			C			C	
AllWayAvgQ:	0.6	0.6	0.6	0.6	0.6	0.6	0.1	1.8	1.8	0.1	1.4	0.2

Newport Banning Ranch
Year 2016 Cumulative Conditions without Project
PM Peak Hour

Note: Queue reported is the number of cars per lane.

Newport Banning Ranch
Year 2016 Cumulative Conditions without Project
PM Peak Hour

Level Of Service Computation Report
ICU 1(Loss as Cycle Length %) Method (Future Volume Alternative)

Intersection #43 Superior Ave/17th St

Cycle (sec):	100	Critical Vol./Cap.(X):	0.819
Loss Time (sec):	0 (Y+R=4.0 sec)	Average Delay (sec/veh):	xxxxxx
Optimal Cycle:	126	Level Of Service:	D

Street Name:	Superior Avenue						17th Street					
Approach:	North Bound			South Bound			East Bound			West Bound		
Movement:	L - T - R			L - T - R			L - T - R			L - T - R		
Control:	Prot+Permit			Prot+Permit			Prot+Permit			Prot+Permit		
Rights:	Include			Include			Include			Include		
Min. Green:	0	0	0	0	0	0	0	0	0	0	0	0
Lanes:	1 0 0 1 1			1 0 1 1 0			1 0 1 1 0			1 0 1 1 0		
Volume Module:												
Base Vol:	100	184	620	89	287	84	25	497	65	423	436	81
Growth Adj:	1.07	1.07	1.07	1.07	1.07	1.07	1.07	1.07	1.07	1.07	1.07	1.07
Initial Bse:	107	197	665	95	308	90	27	533	70	453	467	87
Added Vol:	0	6	2	0	15	0	0	12	0	2	16	0
Committed P:	3	25	0	0	101	0	0	0	11	0	0	0
Initial Fut:	110	228	667	95	424	90	27	545	81	455	483	87
User Adj:	1.00	1.00	1.00	1.00	1.00	1.00	1.00	1.00	1.00	1.00	1.00	1.00
PHF Adj:	1.00	1.00	1.00	1.00	1.00	1.00	1.00	1.00	1.00	1.00	1.00	1.00
PHF Volume:	110	228	667	95	424	90	27	545	81	455	483	87
Reduct Vol:	0	0	0	0	0	0	0	0	0	0	0	0
Reduced Vol:	110	228	667	95	424	90	27	545	81	455	483	87
PCE Adj:	1.00	1.00	1.00	1.00	1.00	1.00	1.00	1.00	1.00	1.00	1.00	1.00
MLF Adj:	1.00	1.00	1.00	1.00	1.00	1.00	1.00	1.00	1.00	1.00	1.00	1.00
FinalVolume:	110	228	667	95	424	90	27	545	81	455	483	87
Saturation Flow Module:												
Sat/Lane:	1600	1600	1600	1600	1600	1600	1600	1600	1600	1600	1600	1600
Adjustment:	1.00	1.00	1.00	1.00	1.00	1.00	1.00	1.00	1.00	1.00	1.00	1.00
Lanes:	1.00	0.51	1.49	1.00	1.65	0.35	1.00	1.74	0.26	1.00	1.70	0.30
Final Sat.:	1600	816	2384	1600	2639	561	1600	2787	413	1600	2713	487
Capacity Analysis Module:												
Vol/Sat:	0.07	0.28	0.28	0.06	0.16	0.16	0.02	0.20	0.20	0.28	0.18	0.18
Crit Moves:		****		****				****		****		

Newport Banning Ranch
Year 2016 Cumulative Conditions without Project
PM Peak Hour

Level Of Service Computation Report
ICU 1(Loss as Cycle Length %) Method (Future Volume Alternative)

Intersection #44 Newport Blvd/17th St

Cycle (sec):	120	Critical Vol./Cap.(X):	0.880
Loss Time (sec):	0 (Y+R=4.0 sec)	Average Delay (sec/veh):	xxxxxx
Optimal Cycle:	180	Level Of Service:	D

Street Name:	Newport Boulevard						17th Street					
Approach:	North Bound			South Bound			East Bound			West Bound		
Movement:	L - T - R			L - T - R			L - T - R			L - T - R		
Control:	Protected			Protected			Protected			Protected		
Rights:	Include			Include			Include			Include		
Min. Green:	0	0	0	0	0	0	0	0	0	0	0	0
Lanes:	1 0 3	1 0		2 0 3	0 1		3 0 1	1 0		2 0 3	0 1	
Volume Module:												
Base Vol:	63	1820	169	714	2315	347	707	393	22	276	485	201
Growth Adj:	1.07	1.07	1.07	1.07	1.07	1.07	1.07	1.07	1.07	1.07	1.07	1.07
Initial Bse:	68	1951	181	765	2482	372	758	421	24	296	520	215
Added Vol:	0	28	0	0	16	2	2	12	0	0	16	0
Committed P:	0	67	0	0	51	0	0	0	0	0	0	0
Initial Fut:	68	2046	181	765	2549	374	760	433	24	296	536	215
User Adj:	1.00	1.00	1.00	1.00	1.00	1.00	1.00	1.00	1.00	1.00	1.00	1.00
PHF Adj:	1.00	1.00	1.00	1.00	1.00	1.00	1.00	1.00	1.00	1.00	1.00	1.00
PHF Volume:	68	2046	181	765	2549	374	760	433	24	296	536	215
Reduct Vol:	0	0	0	0	0	0	0	0	0	0	0	0
Reduced Vol:	68	2046	181	765	2549	374	760	433	24	296	536	215
PCE Adj:	1.00	1.00	1.00	1.00	1.00	1.00	1.00	1.00	1.00	1.00	1.00	1.00
MLF Adj:	1.00	1.00	1.00	1.00	1.00	1.00	1.00	1.00	1.00	1.00	1.00	1.00
FinalVolume:	68	2046	181	765	2549	374	760	433	24	296	536	215
Saturation Flow Module:												
Sat/Lane:	1600	1600	1600	1600	1600	1600	1600	1600	1600	1600	1600	1600
Adjustment:	1.00	1.00	1.00	1.00	1.00	1.00	1.00	1.00	1.00	1.00	1.00	1.00
Lanes:	1.00	3.67	0.33	2.00	3.00	1.00	3.00	1.90	0.10	2.00	3.00	1.00
Final Sat.:	1600	5879	521	3200	4800	1600	4800	3035	165	3200	4800	1600
Capacity Analysis Module:												
Vol/Sat:	0.04	0.35	0.35	0.24	0.53	0.23	0.16	0.14	0.14	0.09	0.11	0.13
Crit Moves:		****		****			****					****

Newport Banning Ranch
Year 2016 Cumulative Conditions without Project
PM Peak Hour

Level Of Service Computation Report
ICU 1(Loss as Cycle Length %) Method (Future Volume Alternative)

Intersection #45 Orange Ave/17th St

Cycle (sec):	100	Critical Vol./Cap.(X):	0.660
Loss Time (sec):	0 (Y+R=4.0 sec)	Average Delay (sec/veh):	xxxxxx
Optimal Cycle:	67	Level Of Service:	B

Street Name:	Orange Avenue						17th Street					
Approach:	North Bound			South Bound			East Bound			West Bound		
Movement:	L - T - R			L - T - R			L - T - R			L - T - R		
Control:	Prot+Permit			Prot+Permit			Prot+Permit			Prot+Permit		
Rights:	Include			Include			Include			Include		
Min. Green:	0	0	0	0	0	0	0	0	0	0	0	0
Lanes:	1 0 1	1 0		1 0 1	0 1		1 0 2	0 1		1 0 2	0 1	
Volume Module:												
Base Vol:	168	276	68	214	204	121	140	910	157	83	895	198
Growth Adj:	1.07	1.07	1.07	1.07	1.07	1.07	1.07	1.07	1.07	1.07	1.07	1.07
Initial Bse:	180	296	73	229	219	130	150	976	168	89	959	212
Added Vol:	0	0	0	0	0	0	0	12	0	0	16	0
Committed P:	0	0	2	2	0	0	0	5	0	1	4	1
Initial Fut:	180	296	75	231	219	130	150	993	168	90	979	213
User Adj:	1.00	1.00	1.00	1.00	1.00	1.00	1.00	1.00	1.00	1.00	1.00	1.00
PHF Adj:	1.00	1.00	1.00	1.00	1.00	1.00	1.00	1.00	1.00	1.00	1.00	1.00
PHF Volume:	180	296	75	231	219	130	150	993	168	90	979	213
Reduct Vol:	0	0	0	0	0	0	0	0	0	0	0	0
Reduced Vol:	180	296	75	231	219	130	150	993	168	90	979	213
PCE Adj:	1.00	1.00	1.00	1.00	1.00	1.00	1.00	1.00	1.00	1.00	1.00	1.00
MLF Adj:	1.00	1.00	1.00	1.00	1.00	1.00	1.00	1.00	1.00	1.00	1.00	1.00
FinalVolume:	180	296	75	231	219	130	150	993	168	90	979	213
Saturation Flow Module:												
Sat/Lane:	1600	1600	1600	1600	1600	1600	1600	1600	1600	1600	1600	1600
Adjustment:	1.00	1.00	1.00	1.00	1.00	1.00	1.00	1.00	1.00	1.00	1.00	1.00
Lanes:	1.00	1.60	0.40	1.00	1.00	1.00	1.00	2.00	1.00	1.00	2.00	1.00
Final Sat.:	1600	2554	646	1600	1600	1600	1600	3200	1600	1600	3200	1600
Capacity Analysis Module:												
Vol/Sat:	0.11	0.12	0.12	0.14	0.14	0.08	0.09	0.31	0.11	0.06	0.31	0.13
Crit Moves:		****		****			****				****	

Newport Banning Ranch
Year 2016 Cumulative Conditions without Project
PM Peak Hour

Level Of Service Computation Report
ICU 1(Loss as Cycle Length %) Method (Future Volume Alternative)

Intersection #46 Santa Ana Ave/17th St

Cycle (sec):	100	Critical Vol./Cap.(X):	0.651
Loss Time (sec):	0 (Y+R=4.0 sec)	Average Delay (sec/veh):	xxxxxx
Optimal Cycle:	53	Level Of Service:	B

Street Name:	Santa Ana Avenue						17th Street					
Approach:	North Bound			South Bound			East Bound			West Bound		
Movement:	L - T - R			L - T - R			L - T - R			L - T - R		
Control:	Permitted			Permitted			Prot+Permit			Prot+Permit		
Rights:	Include			Include			Include			Include		
Min. Green:	0	0	0	0	0	0	0	0	0	0	0	0
Lanes:	1 0 1	0 1		1 0 1	0 1		1 0 2	0 1		1 0 2	0 1	
Volume Module:												
Base Vol:	126	173	94	115	170	88	96	937	69	147	1137	130
Growth Adj:	1.07	1.07	1.07	1.07	1.07	1.07	1.07	1.07	1.07	1.07	1.07	1.07
Initial Bse:	135	185	101	123	182	94	103	1004	74	158	1219	139
Added Vol:	0	0	0	0	0	0	0	21	0	0	22	0
Committed P:	0	0	5	5	0	0	0	12	0	3	9	3
Initial Fut:	135	185	106	128	182	94	103	1037	74	161	1250	142
User Adj:	1.00	1.00	1.00	1.00	1.00	1.00	1.00	1.00	1.00	1.00	1.00	1.00
PHF Adj:	1.00	1.00	1.00	1.00	1.00	1.00	1.00	1.00	1.00	1.00	1.00	1.00
PHF Volume:	135	185	106	128	182	94	103	1037	74	161	1250	142
Reduct Vol:	0	0	0	0	0	0	0	0	0	0	0	0
Reduced Vol:	135	185	106	128	182	94	103	1037	74	161	1250	142
PCE Adj:	1.00	1.00	1.00	1.00	1.00	1.00	1.00	1.00	1.00	1.00	1.00	1.00
MLF Adj:	1.00	1.00	1.00	1.00	1.00	1.00	1.00	1.00	1.00	1.00	1.00	1.00
FinalVolume:	135	185	106	128	182	94	103	1037	74	161	1250	142
Saturation Flow Module:												
Sat/Lane:	1600	1600	1600	1600	1600	1600	1600	1600	1600	1600	1600	1600
Adjustment:	1.00	1.00	1.00	1.00	1.00	1.00	1.00	1.00	1.00	1.00	1.00	1.00
Lanes:	1.00	1.00	1.00	1.00	1.00	1.00	1.00	2.00	1.00	1.00	2.00	1.00
Final Sat.:	1600	1600	1600	1600	1600	1600	1600	3200	1600	1600	3200	1600
Capacity Analysis Module:												
Vol/Sat:	0.08	0.12	0.07	0.08	0.11	0.06	0.06	0.32	0.05	0.10	0.39	0.09
Crit Moves:		****		****			****				****	

Newport Banning Ranch
Year 2016 Cumulative Conditions without Project
PM Peak Hour

Level Of Service Computation Report
ICU 1(Loss as Cycle Length %) Method (Future Volume Alternative)

Intersection #47 Tustin Ave/17th St

Cycle (sec):	100	Critical Vol./Cap.(X):	0.706
Loss Time (sec):	0 (Y+R=4.0 sec)	Average Delay (sec/veh):	xxxxxx
Optimal Cycle:	63	Level Of Service:	C

Street Name:	Tustin Avenue						17th Street					
Approach:	North Bound			South Bound			East Bound			West Bound		
Movement:	L - T - R			L - T - R			L - T - R			L - T - R		
Control:	Permitted			Permitted			Prot+Permit			Prot+Permit		
Rights:	Include			Include			Include			Include		
Min. Green:	0	0	0	0	0	0	0	0	0	0	0	0
Lanes:	1 0 0	1 0		1 0 1	0 1		1 0 1	1 0		1 0 1	1 0	
Volume Module:												
Base Vol:	124	157	83	77	111	56	46	996	62	76	1243	82
Growth Adj:	1.07	1.07	1.07	1.07	1.07	1.07	1.07	1.07	1.07	1.07	1.07	1.07
Initial Bse:	133	168	89	83	119	60	49	1068	66	81	1332	88
Added Vol:	0	0	0	0	0	0	0	21	0	0	22	0
Committed P:	0	0	5	5	0	0	0	30	0	3	17	3
Initial Fut:	133	168	94	88	119	60	49	1119	66	84	1371	91
User Adj:	1.00	1.00	1.00	1.00	1.00	1.00	1.00	1.00	1.00	1.00	1.00	1.00
PHF Adj:	1.00	1.00	1.00	1.00	1.00	1.00	1.00	1.00	1.00	1.00	1.00	1.00
PHF Volume:	133	168	94	88	119	60	49	1119	66	84	1371	91
Reduct Vol:	0	0	0	0	0	0	0	0	0	0	0	0
Reduced Vol:	133	168	94	88	119	60	49	1119	66	84	1371	91
PCE Adj:	1.00	1.00	1.00	1.00	1.00	1.00	1.00	1.00	1.00	1.00	1.00	1.00
MLF Adj:	1.00	1.00	1.00	1.00	1.00	1.00	1.00	1.00	1.00	1.00	1.00	1.00
FinalVolume:	133	168	94	88	119	60	49	1119	66	84	1371	91
Saturation Flow Module:												
Sat/Lane:	1600	1600	1600	1600	1600	1600	1600	1600	1600	1600	1600	1600
Adjustment:	1.00	1.00	1.00	1.00	1.00	1.00	1.00	1.00	1.00	1.00	1.00	1.00
Lanes:	1.00	0.64	0.36	1.00	1.00	1.00	1.00	1.89	0.11	1.00	1.88	0.12
Final Sat.:	1600	1027	573	1600	1600	1600	1600	3021	179	1600	3001	199
Capacity Analysis Module:												
Vol/Sat:	0.08	0.16	0.16	0.05	0.07	0.04	0.03	0.37	0.37	0.05	0.46	0.46
Crit Moves:		****		****			****				****	

Newport Banning Ranch
Year 2016 Cumulative Conditions without Project
PM Peak Hour

Level Of Service Computation Report
ICU 1(Loss as Cycle Length %) Method (Future Volume Alternative)

Intersection #48 Irvine Ave/17th St

Cycle (sec):	100	Critical Vol./Cap.(X):	0.707
Loss Time (sec):	0 (Y+R=4.0 sec)	Average Delay (sec/veh):	xxxxxx
Optimal Cycle:	78	Level Of Service:	C

Street Name:	Irvine Avenue						17th Street					
Approach:	North Bound			South Bound			East Bound			West Bound		
Movement:	L - T - R			L - T - R			L - T - R			L - T - R		
Control:	Protected			Protected			Protected			Protected		
Rights:	Include			Include			Include			Include		
Min. Green:	0	0	0	0	0	0	0	0	0	0	0	0
Lanes:	2 0 2	0 1		2 0 2	0 1		2 0 1	1 0		1 0 1	1 0	
Volume Module:												
Base Vol:	373	623	49	168	528	334	233	570	200	101	646	61
Growth Adj:	1.07	1.07	1.07	1.07	1.07	1.07	1.07	1.07	1.07	1.07	1.07	1.07
Initial Bse:	400	668	53	180	566	358	250	611	214	108	693	65
Added Vol:	5	3	37	2	1	0	0	16	5	22	17	6
Committed P:	0	0	0	8	0	0	14	35	0	0	23	0
Initial Fut:	405	671	90	190	567	358	264	662	219	130	733	71
User Adj:	1.00	1.00	1.00	1.00	1.00	1.00	1.00	1.00	1.00	1.00	1.00	1.00
PHF Adj:	1.00	1.00	1.00	1.00	1.00	1.00	1.00	1.00	1.00	1.00	1.00	1.00
PHF Volume:	405	671	90	190	567	358	264	662	219	130	733	71
Reduct Vol:	0	0	0	0	0	0	0	0	0	0	0	0
Reduced Vol:	405	671	90	190	567	358	264	662	219	130	733	71
PCE Adj:	1.00	1.00	1.00	1.00	1.00	1.00	1.00	1.00	1.00	1.00	1.00	1.00
MLF Adj:	1.00	1.00	1.00	1.00	1.00	1.00	1.00	1.00	1.00	1.00	1.00	1.00
FinalVolume:	405	671	90	190	567	358	264	662	219	130	733	71
Saturation Flow Module:												
Sat/Lane:	1600	1600	1600	1600	1600	1600	1600	1600	1600	1600	1600	1600
Adjustment:	1.00	1.00	1.00	1.00	1.00	1.00	1.00	1.00	1.00	1.00	1.00	1.00
Lanes:	2.00	2.00	1.00	2.00	2.00	1.00	2.00	1.50	0.50	1.00	1.82	0.18
Final Sat.:	3200	3200	1600	3200	3200	1600	3200	2403	797	1600	2916	284
Capacity Analysis Module:												
Vol/Sat:	0.13	0.21	0.06	0.06	0.18	0.22	0.08	0.28	0.28	0.08	0.25	0.25
Crit Moves:	****					****		****		****		

Newport Banning Ranch
Year 2016 Cumulative Conditions without Project
PM Peak Hour

Level Of Service Computation Report
ICU 1(Loss as Cycle Length %) Method (Future Volume Alternative)

Intersection #49 Placentia Ave/16th St

Cycle (sec):	100	Critical Vol./Cap.(X):	0.352
Loss Time (sec):	0 (Y+R=4.0 sec)	Average Delay (sec/veh):	xxxxxx
Optimal Cycle:	22	Level Of Service:	A

Street Name:	Placentia Avenue						16th Street					
Approach:	North Bound			South Bound			East Bound			West Bound		
Movement:	L - T - R			L - T - R			L - T - R			L - T - R		
Control:	Permitted			Permitted			Permitted			Permitted		
Rights:	Include			Include			Include			Include		
Min. Green:	0	0	0	0	0	0	0	0	0	0	0	0
Lanes:	1 0 1	1 0		1 0 1	1 0		1 0 0	1 0		1 0 0	1 0	
Volume Module:												
Base Vol:	34	530	22	21	381	20	64	42	59	21	28	82
Growth Adj:	1.06	1.06	1.06	1.06	1.06	1.06	1.06	1.06	1.06	1.06	1.06	1.06
Initial Bse:	36	563	23	22	404	21	68	45	63	22	30	87
Added Vol:	0	34	0	0	18	40	16	10	0	0	17	0
Committed P:	0	28	0	0	9	0	0	0	0	0	0	0
Initial Fut:	36	625	23	22	431	61	84	55	63	22	47	87
User Adj:	1.00	1.00	1.00	1.00	1.00	1.00	1.00	1.00	1.00	1.00	1.00	1.00
PHF Adj:	1.00	1.00	1.00	1.00	1.00	1.00	1.00	1.00	1.00	1.00	1.00	1.00
PHF Volume:	36	625	23	22	431	61	84	55	63	22	47	87
Reduct Vol:	0	0	0	0	0	0	0	0	0	0	0	0
Reduced Vol:	36	625	23	22	431	61	84	55	63	22	47	87
PCE Adj:	1.00	1.00	1.00	1.00	1.00	1.00	1.00	1.00	1.00	1.00	1.00	1.00
MLF Adj:	1.00	1.00	1.00	1.00	1.00	1.00	1.00	1.00	1.00	1.00	1.00	1.00
FinalVolume:	36	625	23	22	431	61	84	55	63	22	47	87
Saturation Flow Module:												
Sat/Lane:	1600	1600	1600	1600	1600	1600	1600	1600	1600	1600	1600	1600
Adjustment:	1.00	1.00	1.00	1.00	1.00	1.00	1.00	1.00	1.00	1.00	1.00	1.00
Lanes:	1.00	1.93	0.07	1.00	1.75	0.25	1.00	0.47	0.53	1.00	0.35	0.65
Final Sat.:	1600	3085	115	1600	2802	398	1600	745	855	1600	559	1041
Capacity Analysis Module:												
Vol/Sat:	0.02	0.20	0.20	0.01	0.15	0.15	0.05	0.07	0.07	0.01	0.08	0.08
Crit Moves:		****		****			****				****	

Newport Banning Ranch
Year 2016 Cumulative Conditions without Project
PM Peak Hour

Level Of Service Computation Report
ICU 1(Loss as Cycle Length %) Method (Future Volume Alternative)

Intersection #50 Superior Ave/16th St

Cycle (sec):	100	Critical Vol./Cap.(X):	0.460
Loss Time (sec):	0 (Y+R=4.0 sec)	Average Delay (sec/veh):	xxxxxx
Optimal Cycle:	27	Level Of Service:	A

Street Name:	Superior Avenue						16th Street					
Approach:	North Bound			South Bound			East Bound			West Bound		
Movement:	L - T - R			L - T - R			L - T - R			L - T - R		
Control:	Permitted			Permitted			Permitted			Permitted		
Rights:	Include			Include			Include			Include		
Min. Green:	0	0	0	0	0	0	0	0	0	0	0	0
Lanes:	1 0 2 0 1			1 0 1 1 0			1 0 0 1 0			0 1 0 0 1		
Volume Module:												
Base Vol:	23	699	23	25	864	43	30	94	0	16	87	14
Growth Adj:	1.07	1.07	1.07	1.07	1.07	1.07	1.07	1.07	1.07	1.07	1.07	1.07
Initial Bse:	25	749	25	27	926	46	32	101	0	17	93	15
Added Vol:	0	10	0	0	12	14	6	4	0	0	3	0
Committed P:	2	34	0	0	118	0	0	0	3	0	0	0
Initial Fut:	27	793	25	27	1056	60	38	105	3	17	96	15
User Adj:	1.00	1.00	1.00	1.00	1.00	1.00	1.00	1.00	1.00	1.00	1.00	1.00
PHF Adj:	1.00	1.00	1.00	1.00	1.00	1.00	1.00	1.00	1.00	1.00	1.00	1.00
PHF Volume:	27	793	25	27	1056	60	38	105	3	17	96	15
Reduct Vol:	0	0	0	0	0	0	0	0	0	0	0	0
Reduced Vol:	27	793	25	27	1056	60	38	105	3	17	96	15
PCE Adj:	1.00	1.00	1.00	1.00	1.00	1.00	1.00	1.00	1.00	1.00	1.00	1.00
MLF Adj:	1.00	1.00	1.00	1.00	1.00	1.00	1.00	1.00	1.00	1.00	1.00	1.00
FinalVolume:	27	793	25	27	1056	60	38	105	3	17	96	15
Saturation Flow Module:												
Sat/Lane:	1600	1600	1600	1600	1600	1600	1600	1600	1600	1600	1600	1600
Adjustment:	1.00	1.00	1.00	1.00	1.00	1.00	1.00	1.00	1.00	1.00	1.00	1.00
Lanes:	1.00	2.00	1.00	1.00	1.89	0.11	1.00	0.97	0.03	0.15	0.85	1.00
Final Sat.:	1600	3200	1600	1600	3028	172	1600	1555	45	242	1358	1600
Capacity Analysis Module:												
Vol/Sat:	0.02	0.25	0.02	0.02	0.35	0.35	0.02	0.07	0.07	0.01	0.07	0.01
Crit Moves:	****				****		****				****	

Newport Banning Ranch
Year 2016 Cumulative Conditions without Project
PM Peak Hour

Level Of Service Computation Report
ICU 1(Loss as Cycle Length %) Method (Future Volume Alternative)

Intersection #51 Newport Blvd/16th St

Cycle (sec):	120	Critical Vol./Cap.(X):	0.602
Loss Time (sec):	0 (Y+R=4.0 sec)	Average Delay (sec/veh):	xxxxxx
Optimal Cycle:	47	Level Of Service:	B

Street Name:	Newport Boulevard									16th Street								
Approach:	North Bound			South Bound			East Bound			West Bound		
Movement:	L	- T	- R	L	- T	- R	L	- T	- R	L	- T	- R
Control:	Protected			Protected			Permitted			Permitted		
Rights:	Include			Include			Include			Include		
Min. Green:	0	0	0	0	0	0	0	0	0	0	0	0
Lanes:	1 0	2 1	0	1 0	3 0	1	0 0	1! 0	0	0 0	1! 0	0
Volume Module:												
Base Vol:	20	1402	50	85	2084	29	36	48	21	20	37	59
Growth Adj:	1.07	1.07	1.07	1.07	1.07	1.07	1.07	1.07	1.07	1.07	1.07	1.07
Initial Bse:	21	1503	54	91	2234	31	39	51	23	21	40	63
Added Vol:	0	28	0	0	16	0	0	0	0	0	0	0
Committed P:	3	67	12	0	51	0	0	0	5	9	0	0
Initial Fut:	24	1598	66	91	2301	31	39	51	28	30	40	63
User Adj:	1.00	1.00	1.00	1.00	1.00	1.00	1.00	1.00	1.00	1.00	1.00	1.00
PHF Adj:	1.00	1.00	1.00	1.00	1.00	1.00	1.00	1.00	1.00	1.00	1.00	1.00
PHF Volume:	24	1598	66	91	2301	31	39	51	28	30	40	63
Reduct Vol:	0	0	0	0	0	0	0	0	0	0	0	0
Reduced Vol:	24	1598	66	91	2301	31	39	51	28	30	40	63
PCE Adj:	1.00	1.00	1.00	1.00	1.00	1.00	1.00	1.00	1.00	1.00	1.00	1.00
MLF Adj:	1.00	1.00	1.00	1.00	1.00	1.00	1.00	1.00	1.00	1.00	1.00	1.00
FinalVolume:	24	1598	66	91	2301	31	39	51	28	30	40	63
Saturation Flow Module:												
Sat/Lane:	1600	1600	1600	1600	1600	1600	1600	1600	1600	1600	1600	1600
Adjustment:	1.00	1.00	1.00	1.00	1.00	1.00	1.00	1.00	1.00	1.00	1.00	1.00
Lanes:	1.00	2.88	0.12	1.00	3.00	1.00	0.33	0.44	0.23	0.23	0.30	0.47
Final Sat.:	1600	4611	189	1600	4800	1600	525	700	374	365	476	759
Capacity Analysis Module:												
Vol/Sat:	0.02	0.35	0.35	0.06	0.48	0.02	0.02	0.07	0.07	0.02	0.08	0.08
Crit Moves:	****				****		****				****	

Newport Banning Ranch
Year 2016 Cumulative Conditions without Project
PM Peak Hour

Level Of Service Computation Report
ICU 1(Loss as Cycle Length %) Method (Future Volume Alternative)

Intersection #52 Bluff Rd/Victoria St

Cycle (sec):	100	Critical Vol./Cap.(X):	0.582
Loss Time (sec):	0 (Y+R=4.0 sec)	Average Delay (sec/veh):	xxxxxx
Optimal Cycle:	55	Level Of Service:	A

Street Name:	Bluff Road						Victoria St					
Approach:	North Bound			South Bound			East Bound			West Bound		
Movement:	L - T - R			L - T - R			L - T - R			L - T - R		
Control:	Protected			Protected			Protected			Protected		
Rights:	Include			Include			Include			Include		
Min. Green:	0	0	0	0	0	0	0	0	0	0	0	0
Lanes:	0 0 0 0 0			0 0 0 0 0			0 0 2 0 0			0 0 2 0 0		
Volume Module:												
Base Vol:	0	0	0	0	0	0	0	942	0	0	1709	0
Growth Adj:	1.00	1.00	1.00	1.00	1.00	1.00	1.00	1.07	1.00	1.00	1.07	1.00
Initial Bse:	0	0	0	0	0	0	0	1010	0	0	1832	0
Added Vol:	0	0	0	0	0	0	0	35	0	0	30	0
PasserByVol:	0	0	0	0	0	0	0	0	0	0	0	0
Initial Fut:	0	0	0	0	0	0	0	1045	0	0	1862	0
User Adj:	1.00	1.00	1.00	1.00	1.00	1.00	1.00	1.00	1.00	1.00	1.00	1.00
PHF Adj:	1.00	1.00	1.00	1.00	1.00	1.00	1.00	1.00	1.00	1.00	1.00	1.00
PHF Volume:	0	0	0	0	0	0	0	1045	0	0	1862	0
Reduct Vol:	0	0	0	0	0	0	0	0	0	0	0	0
Reduced Vol:	0	0	0	0	0	0	0	1045	0	0	1862	0
PCE Adj:	1.00	1.00	1.00	1.00	1.00	1.00	1.00	1.00	1.00	1.00	1.00	1.00
MLF Adj:	1.00	1.00	1.00	1.00	1.00	1.00	1.00	1.00	1.00	1.00	1.00	1.00
FinalVolume:	0	0	0	0	0	0	0	1045	0	0	1862	0
Saturation Flow Module:												
Sat/Lane:	1600	1600	1600	1600	1600	1600	1600	1600	1600	1600	1600	1600
Adjustment:	1.00	1.00	1.00	1.00	1.00	1.00	1.00	1.00	1.00	1.00	1.00	1.00
Lanes:	0.00	0.00	0.00	0.00	0.00	0.00	0.00	2.00	0.00	0.00	2.00	0.00
Final Sat.:	0	0	0	0	0	0	0	3200	0	0	3200	0
Capacity Analysis Module:												
Vol/Sat:	0.00	0.00	0.00	0.00	0.00	0.00	0.00	0.33	0.00	0.00	0.58	0.00
Crit Moves:							****				****	

Newport Banning Ranch
Year 2016 Cumulative Conditions without Project
PM Peak Hour

Level Of Service Computation Report
ICU 1(Loss as Cycle Length %) Method (Future Volume Alternative)

Intersection #53 Bluff Rd/19th St

Cycle (sec):	100	Critical Vol./Cap.(X):	0.000
Loss Time (sec):	0 (Y+R=4.0 sec)	Average Delay (sec/veh):	xxxxxx
Optimal Cycle:	0	Level Of Service:	

Street Name:	Bluff Rd						19th Street					
Approach:	North Bound			South Bound			East Bound			West Bound		
Movement:	L - T - R			L - T - R			L - T - R			L - T - R		
Control:	Protected			Protected			Protected			Protected		
Rights:	Include			Include			Include			Include		
Min. Green:	0	0	0	0	0	0	0	0	0	0	0	0
Lanes:	0 0 0 0 0			0 0 0 0 0			0 0 0 0 0			0 0 0 0 0		
Volume Module:												
Base Vol:	0	0	0	0	0	0	0	0	0	0	0	0
Growth Adj:	0.00	0.00	0.00	0.00	0.00	0.00	0.00	0.00	0.00	0.00	0.00	0.00
Initial Bse:	0	0	0	0	0	0	0	0	0	0	0	0
Added Vol:	0	0	0	0	0	0	0	0	0	0	0	0
PasserByVol:	0	0	0	0	0	0	0	0	0	0	0	0
Initial Fut:	0	0	0	0	0	0	0	0	0	0	0	0
User Adj:	0.00	0.00	0.00	0.00	0.00	0.00	0.00	0.00	0.00	0.00	0.00	0.00
PHF Adj:	0.00	0.00	0.00	0.00	0.00	0.00	0.00	0.00	0.00	0.00	0.00	0.00
PHF Volume:	0	0	0	0	0	0	0	0	0	0	0	0
Reduct Vol:	0	0	0	0	0	0	0	0	0	0	0	0
Reduced Vol:	0	0	0	0	0	0	0	0	0	0	0	0
PCE Adj:	0.00	0.00	0.00	0.00	0.00	0.00	0.00	0.00	0.00	0.00	0.00	0.00
MLF Adj:	0.00	0.00	0.00	0.00	0.00	0.00	0.00	0.00	0.00	0.00	0.00	0.00
FinalVolume:	0	0	0	0	0	0	0	0	0	0	0	0
Saturation Flow Module:												
Sat/Lane:	0	0	0	0	0	0	0	0	0	0	0	0
Adjustment:	1.00	1.00	1.00	1.00	1.00	1.00	1.00	1.00	1.00	1.00	1.00	1.00
Lanes:	0.00	0.00	0.00	0.00	0.00	0.00	0.00	0.00	0.00	0.00	0.00	0.00
Final Sat.:	0	0	0	0	0	0	0	0	0	0	0	0
Capacity Analysis Module:												
Vol/Sat:	0.00	0.00	0.00	0.00	0.00	0.00	0.00	0.00	0.00	0.00	0.00	0.00
Crit Moves:												

Newport Banning Ranch
Year 2016 Cumulative Conditions without Project
PM Peak Hour

Level Of Service Computation Report
ICU 1(Loss as Cycle Length %) Method (Future Volume Alternative)

Intersection #54 Bluff Rd/17th St

Cycle (sec):	100	Critical Vol./Cap.(X):	0.000
Loss Time (sec):	0 (Y+R=4.0 sec)	Average Delay (sec/veh):	xxxxxx
Optimal Cycle:	0	Level Of Service:	

Street Name:	Bluff Road					17th Street					
Approach:	North Bound			South Bound			East Bound			West Bound		
Movement:	L - T - R			L - T - R			L - T - R			L - T - R		
Control:	Protected			Protected			Protected			Protected		
Rights:	Include			Include			Include			Include		
Min. Green:	0	0	0	0	0	0	0	0	0	0	0	0
Lanes:	0 0 0 0 0			0 0 0 0 0			0 0 0 0 0			0 0 0 0 0		
Volume Module:												
Base Vol:	0	0	0	0	0	0	0	0	0	0	0	0
Growth Adj:	0.00	0.00	0.00	0.00	0.00	0.00	0.00	0.00	0.00	0.00	0.00	0.00
Initial Bse:	0	0	0	0	0	0	0	0	0	0	0	0
Added Vol:	0	0	0	0	0	0	0	0	0	0	0	0
PasserByVol:	0	0	0	0	0	0	0	0	0	0	0	0
Initial Fut:	0	0	0	0	0	0	0	0	0	0	0	0
User Adj:	0.00	0.00	0.00	0.00	0.00	0.00	0.00	0.00	0.00	0.00	0.00	0.00
PHF Adj:	0.00	0.00	0.00	0.00	0.00	0.00	0.00	0.00	0.00	0.00	0.00	0.00
PHF Volume:	0	0	0	0	0	0	0	0	0	0	0	0
Reduct Vol:	0	0	0	0	0	0	0	0	0	0	0	0
Reduced Vol:	0	0	0	0	0	0	0	0	0	0	0	0
PCE Adj:	0.00	0.00	0.00	0.00	0.00	0.00	0.00	0.00	0.00	0.00	0.00	0.00
MLF Adj:	0.00	0.00	0.00	0.00	0.00	0.00	0.00	0.00	0.00	0.00	0.00	0.00
FinalVolume:	0	0	0	0	0	0	0	0	0	0	0	0
Saturation Flow Module:												
Sat/Lane:	0	0	0	0	0	0	0	0	0	0	0	0
Adjustment:	1.00	1.00	1.00	1.00	1.00	1.00	1.00	1.00	1.00	1.00	1.00	1.00
Lanes:	0.00	0.00	0.00	0.00	0.00	0.00	0.00	0.00	0.00	0.00	0.00	0.00
Final Sat.:	0	0	0	0	0	0	0	0	0	0	0	0
Capacity Analysis Module:												
Vol/Sat:	0.00	0.00	0.00	0.00	0.00	0.00	0.00	0.00	0.00	0.00	0.00	0.00
Crit Moves:												

Newport Banning Ranch
Year 2016 Cumulative Conditions without Project
PM Peak Hour

Level Of Service Computation Report
2000 HCM Unsignalized Method (Future Volume Alternative)

Intersection #55 Bluff Rd/16th St

Average Delay (sec/veh): 0.0 Worst Case Level Of Service: [0.0]

Street Name:	Bluff Road						16th Street					
Approach:	North Bound			South Bound			East Bound			West Bound		
Movement:	L - T - R			L - T - R			L - T - R			L - T - R		
Control:	Uncontrolled			Uncontrolled			Stop Sign			Stop Sign		
Rights:	Include			Include			Include			Include		
Lanes:	0 0 0 0 0			0 0 0 0 0			0 0 0 0 0			0 0 0 0 0		
Volume Module:												
Base Vol:	0	0	0	0	0	0	0	0	0	0	0	0
Growth Adj:	0.00	0.00	0.00	0.00	0.00	0.00	0.00	0.00	0.00	0.00	0.00	0.00
Initial Bse:	0	0	0	0	0	0	0	0	0	0	0	0
Added Vol:	0	0	0	0	0	0	0	0	0	0	0	0
PasserByVol:	0	0	0	0	0	0	0	0	0	0	0	0
Initial Fut:	0	0	0	0	0	0	0	0	0	0	0	0
User Adj:	0.00	0.00	0.00	0.00	0.00	0.00	0.00	0.00	0.00	0.00	0.00	0.00
PHF Adj:	0.00	0.00	0.00	0.00	0.00	0.00	0.00	0.00	0.00	0.00	0.00	0.00
PHF Volume:	0	0	0	0	0	0	0	0	0	0	0	0
Reduct Vol:	0	0	0	0	0	0	0	0	0	0	0	0
FinalVolume:	0	0	0	0	0	0	0	0	0	0	0	0
Critical Gap Module:												
Critical Gp:	0.0	0.0	0.0	0.0	0.0	0.0	0.0	0.0	0.0	0.0	0.0	0.0
FollowUpTim:	0.0	0.0	0.0	0.0	0.0	0.0	0.0	0.0	0.0	0.0	0.0	0.0
Capacity Module:												
Cnflict Vol:	0	0	0	0	0	0	0	0	0	0	0	0
Potent Cap.:	0	0	0	0	0	0	0	0	0	0	0	0
Move Cap.:	1	1	1	1	1	1	1	1	1	1	1	1
Volume/Cap:	0.00	0.00	0.00	0.00	0.00	0.00	0.00	0.00	0.00	0.00	0.00	0.00
Level Of Service Module:												
2Way95thQ:	0.0	0.0	0.0	0.0	0.0	0.0	0.0	0.0	0.0	0.0	0.0	0.0
Control Del:	0.0	0.0	0.0	0.0	0.0	0.0	0.0	0.0	0.0	0.0	0.0	0.0
LOS by Move:												
Movement:	LT - LTR - RT			LT - LTR - RT			LT - LTR - RT			LT - LTR - RT		
Shared Cap.:	0	0	0	0	0	0	0	0	0	0	0	0
SharedQueue:	0.0	0.0	0.0	0.0	0.0	0.0	0.0	0.0	0.0	0.0	0.0	0.0
Shrd ConDel:	1.0	1.0	1.0	1.0	1.0	1.0	1.0	1.0	1.0	1.0	1.0	1.0
Shared LOS:												
ApproachDel:	0.0			0.0			0.0			0.0		
ApproachLOS:												

Note: Queue reported is the number of cars per lane.

Newport Banning Ranch
Year 2016 Cumulative Conditions without Project
PM Peak Hour

Level Of Service Computation Report
ICU 1(Loss as Cycle Length %) Method (Future Volume Alternative)

Intersection #56 Bluff Rd/15th St

Cycle (sec):	100	Critical Vol./Cap.(X):	0.000
Loss Time (sec):	0 (Y+R=4.0 sec)	Average Delay (sec/veh):	xxxxxx
Optimal Cycle:	0	Level Of Service:	

Street Name:	Bluff Road					15th Street					
Approach:	North Bound			South Bound			East Bound			West Bound		
Movement:	L - T - R			L - T - R			L - T - R			L - T - R		
Control:	Protected			Protected			Protected			Protected		
Rights:	Include			Include			Include			Include		
Min. Green:	0	0	0	0	0	0	0	0	0	0	0	0
Lanes:	0 0 0 0 0			0 0 0 0 0			0 0 0 0 0			0 0 0 0 0		
Volume Module:												
Base Vol:	0	0	0	0	0	0	0	0	0	0	0	0
Growth Adj:	0.00	0.00	0.00	0.00	0.00	0.00	0.00	0.00	0.00	0.00	0.00	0.00
Initial Bse:	0	0	0	0	0	0	0	0	0	0	0	0
Added Vol:	0	0	0	0	0	0	0	0	0	0	0	0
PasserByVol:	0	0	0	0	0	0	0	0	0	0	0	0
Initial Fut:	0	0	0	0	0	0	0	0	0	0	0	0
User Adj:	0.00	0.00	0.00	0.00	0.00	0.00	0.00	0.00	0.00	0.00	0.00	0.00
PHF Adj:	0.00	0.00	0.00	0.00	0.00	0.00	0.00	0.00	0.00	0.00	0.00	0.00
PHF Volume:	0	0	0	0	0	0	0	0	0	0	0	0
Reduct Vol:	0	0	0	0	0	0	0	0	0	0	0	0
Reduced Vol:	0	0	0	0	0	0	0	0	0	0	0	0
PCE Adj:	0.00	0.00	0.00	0.00	0.00	0.00	0.00	0.00	0.00	0.00	0.00	0.00
MLF Adj:	0.00	0.00	0.00	0.00	0.00	0.00	0.00	0.00	0.00	0.00	0.00	0.00
FinalVolume:	0	0	0	0	0	0	0	0	0	0	0	0
Saturation Flow Module:												
Sat/Lane:	0	0	0	0	0	0	0	0	0	0	0	0
Adjustment:	1.00	1.00	1.00	1.00	1.00	1.00	1.00	1.00	1.00	1.00	1.00	1.00
Lanes:	0.00	0.00	0.00	0.00	0.00	0.00	0.00	0.00	0.00	0.00	0.00	0.00
Final Sat.:	0	0	0	0	0	0	0	0	0	0	0	0
Capacity Analysis Module:												
Vol/Sat:	0.00	0.00	0.00	0.00	0.00	0.00	0.00	0.00	0.00	0.00	0.00	0.00
Crit Moves:												

Newport Banning Ranch
Year 2016 Cumulative Conditions without Project
PM Peak Hour

Level Of Service Computation Report
ICU 1(Loss as Cycle Length %) Method (Future Volume Alternative)

Intersection #57 Bluff Rd/W. Coast Hwy

Cycle (sec):	120	Critical Vol./Cap.(X):	0.000
Loss Time (sec):	0 (Y+R=4.0 sec)	Average Delay (sec/veh):	xxxxxx
Optimal Cycle:	0	Level Of Service:	

Street Name:	Bluff Road						W. Coast Highway					
Approach:	North Bound			South Bound			East Bound			West Bound		
Movement:	L - T - R			L - T - R			L - T - R			L - T - R		
Control:	Protected			Protected			Protected			Protected		
Rights:	Include			Include			Include			Include		
Min. Green:	0	0	0	0	0	0	0	0	0	0	0	0
Lanes:	0 0 0 0 0			0 0 1! 0 0			0 1 2 0 0			0 0 2 1 0		
Volume Module:												
Base Vol:	0	0	0	0	0	0	0	1487	0	0	2818	0
Growth Adj:	1.00	1.00	1.00	1.00	1.00	1.00	1.00	1.07	1.00	1.00	1.07	1.00
Initial Bse:	0	0	0	0	0	0	0	1594	0	0	3021	0
Added Vol:	0	0	0	12	0	1	3	190	0	0	159	26
PasserByVol:	0	0	0	0	0	0	0	0	0	0	0	0
Initial Fut:	0	0	0	12	0	1	3	1784	0	0	3180	26
User Adj:	1.00	1.00	1.00	1.00	1.00	1.00	1.00	1.00	1.00	1.00	1.00	1.00
PHF Adj:	1.00	1.00	1.00	1.00	1.00	1.00	1.00	1.00	1.00	1.00	1.00	1.00
PHF Volume:	0	0	0	12	0	1	3	1784	0	0	3180	26
Reduct Vol:	0	0	0	0	0	0	0	0	0	0	0	0
Reduced Vol:	0	0	0	12	0	1	3	1784	0	0	3180	26
PCE Adj:	1.00	1.00	1.00	1.00	1.00	1.00	1.00	1.00	1.00	1.00	1.00	1.00
MLF Adj:	1.00	1.00	1.00	1.00	1.00	1.00	1.00	1.00	1.00	1.00	1.00	1.00
FinalVolume:	0	0	0	12	0	1	3	1784	0	0	3180	26
OvlAdjVol:				0		0	0	0			0	0
Saturation Flow Module:												
Sat/Lane:	0	0	0	0	0	0	0	0	0	0	0	0
Adjustment:	1.00	1.00	1.00	1.00	1.00	1.00	1.00	1.00	1.00	1.00	1.00	1.00
Lanes:	0.00	0.00	0.00	0.00	0.00	0.00	0.00	0.00	0.00	0.00	0.00	0.00
Final Sat.:	0	0	0	0	0	0	0	0	0	0	0	0
Capacity Analysis Module:												
Vol/Sat:	0.00	0.00	0.00	0.00	0.00	0.00	0.00	0.00	0.00	0.00	0.00	0.00
Crit Moves:												

Newport Banning Ranch
Year 2016 Cumulative Conditions without Project
PM Peak Hour

Level Of Service Computation Report
2000 HCM 4-Way Stop Method (Future Volume Alternative)

Intersection #58 Monrovia Ave/15th Street

Cycle (sec):	100	Critical Vol./Cap.(X):	0.142
Loss Time (sec):	0 (Y+R=4.0 sec)	Average Delay (sec/veh):	7.5
Optimal Cycle:	0	Level Of Service:	A

Street Name:	Monrovia Ave						15th Street					
Approach:	North Bound			South Bound			East Bound			West Bound		
Movement:	L - T - R			L - T - R			L - T - R			L - T - R		
Control:	Stop Sign			Stop Sign			Stop Sign			Stop Sign		
Rights:	Include			Include			Include			Include		
Min. Green:	0	0	0	0	0	0	0	0	0	0	0	0
Lanes:	0 0 0 1 0			0 0 1! 0 0			0 1 0 0 0			0 0 1! 0 0		
Volume Module: >> Count Date: 4 May 2011 << Existing PM Peak Hour												
Base Vol:	0	5	17	92	5	1	9	7	0	11	2	42
Growth Adj:	1.00	1.00	1.00	1.00	1.00	1.00	1.00	1.00	1.00	1.00	1.00	1.00
Initial Bse:	0	5	17	92	5	1	9	7	0	11	2	42
Added Vol:	0	0	0	18	0	0	0	0	0	0	0	37
PasserByVol:	0	0	0	0	0	0	0	0	0	0	0	0
Initial Fut:	0	5	17	110	5	1	9	7	0	11	2	79
User Adj:	1.00	1.00	1.00	1.00	1.00	1.00	1.00	1.00	1.00	1.00	1.00	1.00
PHF Adj:	1.00	1.00	1.00	1.00	1.00	1.00	1.00	1.00	1.00	1.00	1.00	1.00
PHF Volume:	0	5	17	110	5	1	9	7	0	11	2	79
Reduct Vol:	0	0	0	0	0	0	0	0	0	0	0	0
Reduced Vol:	0	5	17	110	5	1	9	7	0	11	2	79
PCE Adj:	1.00	1.00	1.00	1.00	1.00	1.00	1.00	1.00	1.00	1.00	1.00	1.00
MLF Adj:	1.00	1.00	1.00	1.00	1.00	1.00	1.00	1.00	1.00	1.00	1.00	1.00
FinalVolume:	0	5	17	110	5	1	9	7	0	11	2	79
Saturation Flow Module:												
Adjustment:	1.00	1.00	1.00	1.00	1.00	1.00	1.00	1.00	1.00	1.00	1.00	1.00
Lanes:	0.00	0.23	0.77	0.95	0.04	0.01	0.56	0.44	0.00	0.12	0.02	0.86
Final Sat.:	0	210	715	775	35	7	446	347	0	112	20	804
Capacity Analysis Module:												
Vol/Sat:	xxxx	0.02	0.02	0.14	0.14	0.14	0.02	0.02	xxxx	0.10	0.10	0.10
Crit Moves:		****		****				****			****	
Delay/Veh:	0.0	6.9	6.9	8.0	8.0	8.0	7.5	7.5	0.0	7.1	7.1	7.1
Delay Adj:	1.00	1.00	1.00	1.00	1.00	1.00	1.00	1.00	1.00	1.00	1.00	1.00
AdjDel/Veh:	0.0	6.9	6.9	8.0	8.0	8.0	7.5	7.5	0.0	7.1	7.1	7.1
LOS by Move:	*	A	A	A	A	A	A	A	*	A	A	A
ApproachDel:		6.9			8.0			7.5			7.1	
Delay Adj:		1.00			1.00			1.00			1.00	
ApprAdjDel:		6.9			8.0			7.5			7.1	
LOS by Appr:		A			A			A			A	
AllWayAvgQ:	0.0	0.0	0.0	0.2	0.2	0.2	0.0	0.0	0.0	0.1	0.1	0.1

Newport Banning Ranch
Year 2016 Cumulative Conditions without Project
PM Peak Hour

Note: Queue reported is the number of cars per lane.

Newport Banning Ranch
Year 2016 Cumulative Conditions without Project
PM Peak Hour

Level Of Service Computation Report
ICU 1(Loss as Cycle Length %) Method (Future Volume Alternative)

Intersection #100 Pomona Ave/16th St

Cycle (sec):	100	Critical Vol./Cap.(X):	0.048
Loss Time (sec):	0 (Y+R=4.0 sec)	Average Delay (sec/veh):	xxxxxx
Optimal Cycle:	15	Level Of Service:	A

Street Name:	Pomona Avenue						16th Street					
Approach:	North Bound			South Bound			East Bound			West Bound		
Movement:	L - T - R			L - T - R			L - T - R			L - T - R		
Control:	Permitted			Permitted			Permitted			Permitted		
Rights:	Include			Include			Include			Include		
Min. Green:	0	0	0	0	0	0	0	0	0	0	0	0
Lanes:	0 0 0 0 0			1 0 0 1 0			1 0 0 1 0			0 0 0 1 0		
Volume Module:												
Base Vol:	0	0	0	34	56	15	0	-200	0	0	-200	0
Growth Adj:	1.07	1.07	1.07	1.07	1.07	1.07	1.07	1.07	1.07	1.07	1.07	1.07
Initial Bse:	0	0	0	36	60	16	0	-214	0	0	-214	0
Added Vol:	0	0	0	0	0	0	0	10	0	0	17	0
PasserByVol:	0	0	0	0	0	0	0	0	0	0	0	0
Initial Fut:	0	0	0	36	60	16	0	-204	0	0	-197	0
User Adj:	1.00	1.00	1.00	1.00	1.00	1.00	1.00	0.00	1.00	1.00	0.00	1.00
PHF Adj:	1.00	1.00	1.00	1.00	1.00	1.00	1.00	0.00	1.00	1.00	0.00	1.00
PHF Volume:	0	0	0	36	60	16	0	0	0	0	0	0
Reduct Vol:	0	0	0	0	0	0	0	0	0	0	0	0
Reduced Vol:	0	0	0	36	60	16	0	0	0	0	0	0
PCE Adj:	1.00	1.00	1.00	1.00	1.00	1.00	1.00	0.00	1.00	1.00	0.00	1.00
MLF Adj:	1.00	1.00	1.00	1.00	1.00	1.00	1.00	0.00	1.00	1.00	0.00	1.00
FinalVolume:	0	0	0	36	60	16	0	0	0	0	0	0
Saturation Flow Module:												
Sat/Lane:	1600	1600	1600	1600	1600	1600	1600	1600	1600	1600	1600	1600
Adjustment:	1.00	1.00	1.00	1.00	1.00	1.00	1.00	1.00	1.00	1.00	1.00	1.00
Lanes:	0.00	0.00	0.00	1.00	0.79	0.21	1.00	1.00	0.00	0.00	1.00	0.00
Final Sat.:	0	0	0	1600	1262	338	1600	1600	0	0	1600	0
Capacity Analysis Module:												
Vol/Sat:	0.00	0.00	0.00	0.02	0.05	0.05	0.00	0.00	0.00	0.00	0.00	0.00
Crit Moves:					****							

Newport Banning Ranch
Year 2016 Cumulative Conditions with Project
AM Peak Hour

Scenario Report

Scenario:	CEQA 2016 w/ Project AM ICU
Command:	CEQA 2016 w/ Project AM ICU
Volume:	Existing+Commited AM
Geometry:	2016 Planned ICU
Impact Fee:	Default Impact Fee
Trip Generation:	Cumulative + Proj AM
Trip Distribution:	Cumul+Project
Paths:	Bluff to 19th
Routes:	Default Route
Configuration:	2016 ICU

Newport Banning Ranch
Year 2016 Cumulative Conditions with Project
AM Peak Hour

Level Of Service Computation Report
2000 HCM 4-Way Stop Method (Future Volume Alternative)

Intersection #1 Monrovia Ave/16th St

Cycle (sec):	100	Critical Vol./Cap.(X):	0.474
Loss Time (sec):	0 (Y+R=4.0 sec)	Average Delay (sec/veh):	11.7
Optimal Cycle:	0	Level Of Service:	B

Street Name:	Monrovia Avenue						16th Street					
Approach:	North Bound			South Bound			East Bound			West Bound		
Movement:	L -	T -	R	L -	T -	R	L -	T -	R	L -	T -	R
Control:	Stop Sign			Stop Sign			Stop Sign			Stop Sign		
Rights:	Include			Include			Include			Include		
Min. Green:	0	0	0	0	0	0	0	0	0	0	0	0
Lanes:	0 0	1! 0	0	0 0	1! 0	0	0 0	1! 0	0	0 0	1! 0	0
Volume Module:												
Base Vol:	4	92	54	35	104	19	9	20	10	112	44	44
Growth Adj:	1.00	1.00	1.00	1.00	1.00	1.00	1.00	1.00	1.00	1.00	1.00	1.00
Initial Bse:	4	92	54	35	104	19	9	20	10	112	44	44
Added Vol:	0	48	27	-4	24	15	42	155	0	65	48	-17
Committed P:	0	0	0	0	0	0	0	0	0	0	0	0
Initial Fut:	4	140	81	31	128	34	51	175	10	177	92	27
User Adj:	1.00	1.00	1.00	1.00	1.00	1.00	1.00	1.00	1.00	1.00	1.00	1.00
PHF Adj:	1.00	1.00	1.00	1.00	1.00	1.00	1.00	1.00	1.00	1.00	1.00	1.00
PHF Volume:	4	140	81	31	128	34	51	175	10	177	92	27
Reduct Vol:	0	0	0	0	0	0	0	0	0	0	0	0
Reduced Vol:	4	140	81	31	128	34	51	175	10	177	92	27
PCE Adj:	1.00	1.00	1.00	1.00	1.00	1.00	1.00	1.00	1.00	1.00	1.00	1.00
MLF Adj:	1.00	1.00	1.00	1.00	1.00	1.00	1.00	1.00	1.00	1.00	1.00	1.00
FinalVolume:	4	140	81	31	128	34	51	175	10	177	92	27
Saturation Flow Module:												
Adjustment:	1.00	1.00	1.00	1.00	1.00	1.00	1.00	1.00	1.00	1.00	1.00	1.00
Lanes:	0.02	0.62	0.36	0.16	0.66	0.18	0.22	0.74	0.04	0.60	0.31	0.09
Final Sat.:	11	380	220	94	390	103	132	452	26	373	194	57
Capacity Analysis Module:												
Vol/Sat:	0.37	0.37	0.37	0.33	0.33	0.33	0.39	0.39	0.39	0.47	0.47	0.47
Crit Moves:		****		****			****				****	
Delay/Veh:	11.2	11.2	11.2	11.0	11.0	11.0	11.6	11.6	11.6	12.8	12.8	12.8
Delay Adj:	1.00	1.00	1.00	1.00	1.00	1.00	1.00	1.00	1.00	1.00	1.00	1.00
AdjDel/Veh:	11.2	11.2	11.2	11.0	11.0	11.0	11.6	11.6	11.6	12.8	12.8	12.8
LOS by Move:	B	B	B	B	B	B	B	B	B	B	B	B
ApproachDel:		11.2			11.0			11.6			12.8	
Delay Adj:		1.00			1.00			1.00			1.00	
ApprAdjDel:		11.2			11.0			11.6			12.8	
LOS by Appr:		B			B			B			B	
AllWayAvgQ:	0.5	0.5	0.5	0.4	0.4	0.4	0.5	0.5	0.5	0.8	0.8	0.8

Newport Banning Ranch
Year 2016 Cumulative Conditions with Project
AM Peak Hour

Note: Queue reported is the number of cars per lane.
****

Newport Banning Ranch
Year 2016 Cumulative Conditions with Project
AM Peak Hour

Level Of Service Computation Report
ICU 1(Loss as Cycle Length %) Method (Future Volume Alternative)

Intersection #2 Placentia Ave/15th St

Cycle (sec):	100	Critical Vol./Cap.(X):	0.632
Loss Time (sec):	0 (Y+R=4.0 sec)	Average Delay (sec/veh):	xxxxxx
Optimal Cycle:	62	Level Of Service:	B

Street Name:	Placentia Ave						15th Street					
Approach:	North Bound			South Bound			East Bound			West Bound		
Movement:	L - T - R			L - T - R			L - T - R			L - T - R		
Control:	Prot+Permit			Prot+Permit			Split Phase			Split Phase		
Rights:	Include			Include			Include			Include		
Min. Green:	0	0	0	0	0	0	0	0	0	0	0	0
Lanes:	1 0 1	1 0		1 0 1	1 0		0 0 1!	0 0		0 1 0	0 1	
Volume Module:												
Base Vol:	131	425	15	25	431	19	57	51	174	4	22	75
Growth Adj:	1.00	1.00	1.00	1.00	1.00	1.00	1.00	1.00	1.00	1.00	1.00	1.00
Initial Bse:	131	425	15	25	431	19	57	51	174	4	22	75
Added Vol:	66	-187	0	0	-41	16	25	0	217	0	25	0
Committed P:	0	24	0	0	5	0	0	0	0	0	0	0
Initial Fut:	197	262	15	25	395	35	82	51	391	4	47	75
User Adj:	1.00	1.00	1.00	1.00	1.00	1.00	1.00	1.00	1.00	1.00	1.00	1.00
PHF Adj:	1.00	1.00	1.00	1.00	1.00	1.00	1.00	1.00	1.00	1.00	1.00	1.00
PHF Volume:	197	262	15	25	395	35	82	51	391	4	47	75
Reduct Vol:	0	0	0	0	0	0	0	0	0	0	0	0
Reduced Vol:	197	262	15	25	395	35	82	51	391	4	47	75
PCE Adj:	1.00	1.00	1.00	1.00	1.00	1.00	1.00	1.00	1.00	1.00	1.00	1.00
MLF Adj:	1.00	1.00	1.00	1.00	1.00	1.00	1.00	1.00	1.00	1.00	1.00	1.00
FinalVolume:	197	262	15	25	395	35	82	51	391	4	47	75
Saturation Flow Module:												
Sat/Lane:	1600	1600	1600	1600	1600	1600	1600	1600	1600	1600	1600	1600
Adjustment:	1.00	1.00	1.00	1.00	1.00	1.00	1.00	1.00	1.00	1.00	1.00	1.00
Lanes:	1.00	1.89	0.11	1.00	1.84	0.16	0.16	0.10	0.74	0.08	0.92	1.00
Final Sat.:	1600	3027	173	1600	2940	260	250	156	1194	125	1475	1600
Capacity Analysis Module:												
Vol/Sat:	0.12	0.09	0.09	0.02	0.13	0.13	0.33	0.33	0.33	0.03	0.03	0.05
Crit Moves:	****				****			****				****

Newport Banning Ranch
Year 2016 Cumulative Conditions with Project
AM Peak Hour

Level Of Service Computation Report
2000 HCM Unsignalized Method (Future Volume Alternative)

Intersection #3 Superior Ave/15th St

Average Delay (sec/veh): 1.7 Worst Case Level Of Service: C[22.5]

Street Name:	Superior Avenue						15th Street					
Approach:	North Bound			South Bound			East Bound			West Bound		
Movement:	L - T - R			L - T - R			L - T - R			L - T - R		
Control:	Uncontrolled			Uncontrolled			Stop Sign			Stop Sign		
Rights:	Include			Include			Include			Include		
Lanes:	1 0 2	0 0		0 0 1	1 0		1 0 0	0 1		0 0 0	0 0	
Volume Module:												
Base Vol:	77	799	0	0	328	59	64	0	21	0	0	0
Growth Adj:	1.00	1.00	1.00	1.00	1.00	1.00	1.00	1.00	1.00	1.00	1.00	1.00
Initial Bse:	77	799	0	0	328	59	64	0	21	0	0	0
Added Vol:	0	68	0	0	4	25	0	0	0	0	0	0
Committed P:	0	30	0	0	27	0	0	0	0	0	0	0
Initial Fut:	77	897	0	0	359	84	64	0	21	0	0	0
User Adj:	1.00	1.00	1.00	1.00	1.00	1.00	1.00	1.00	1.00	1.00	1.00	1.00
PHF Adj:	1.00	1.00	1.00	1.00	1.00	1.00	1.00	1.00	1.00	1.00	1.00	1.00
PHF Volume:	77	897	0	0	359	84	64	0	21	0	0	0
Reduct Vol:	0	0	0	0	0	0	0	0	0	0	0	0
FinalVolume:	77	897	0	0	359	84	64	0	21	0	0	0
Critical Gap Module:												
Critical Gp:	4.1	xxxx	xxxxx	xxxxx	xxxx	xxxxx	6.8	xxxx	6.9	xxxxx	xxxx	xxxxx
FollowUpTim:	2.2	xxxx	xxxxx	xxxxx	xxxx	xxxxx	3.5	xxxx	3.3	xxxxx	xxxx	xxxxx
Capacity Module:												
Cnflict Vol:	443	xxxx	xxxxx	xxxx	xxxx	xxxxx	1004	xxxx	222	xxxx	xxxx	xxxxx
Potent Cap.:	1128	xxxx	xxxxx	xxxx	xxxx	xxxxx	242	xxxx	788	xxxx	xxxx	xxxxx
Move Cap.:	1128	xxxx	xxxxx	xxxx	xxxx	xxxxx	229	xxxx	788	xxxx	xxxx	xxxxx
Volume/Cap:	0.07	xxxx	xxxx	xxxx	xxxx	xxxx	0.28	xxxx	0.03	xxxx	xxxx	xxxx
Level Of Service Module:												
2Way95thQ:	0.2	xxxx	xxxxx	xxxx	xxxx	xxxxx	1.1	xxxx	0.1	xxxx	xxxx	xxxxx
Control Del:	8.4	xxxx	xxxxx	xxxxx	xxxx	xxxxx	26.7	xxxx	9.7	xxxxx	xxxx	xxxxx
LOS by Move:	A	*	*	*	*	*	D	*	A	*	*	*
Movement:	LT - LTR - RT			LT - LTR - RT			LT - LTR - RT			LT - LTR - RT		
Shared Cap.:	xxxx	xxxx	xxxxx	xxxx	xxxx	xxxxx	xxxx	xxxx	xxxxx	xxxx	xxxx	xxxxx
SharedQueue:	xxxxx	xxxx	xxxxx	xxxxx	xxxx	xxxxx	xxxxx	xxxx	xxxxx	xxxxx	xxxx	xxxxx
Shrd ConDel:	xxxxx	xxxx	xxxxx	xxxxx	xxxx	xxxxx	xxxxx	xxxx	xxxxx	xxxxx	xxxx	xxxxx
Shared LOS:	*	*	*	*	*	*	*	*	*	*	*	*
ApproachDel:	xxxxxx			xxxxxx			22.5			xxxxxx		
ApproachLOS:	*			*			C			*		

Note: Queue reported is the number of cars per lane.

Newport Banning Ranch
Year 2016 Cumulative Conditions with Project
AM Peak Hour

Level Of Service Computation Report
ICU 1(Loss as Cycle Length %) Method (Future Volume Alternative)

Intersection #4 Superior Ave/Placentia Ave

Cycle (sec):	100	Critical Vol./Cap.(X):	0.513
Loss Time (sec):	0 (Y+R=4.0 sec)	Average Delay (sec/veh):	xxxxxx
Optimal Cycle:	38	Level Of Service:	A

Street Name:	Superior Avenue						Placentia Avenue					
Approach:	North Bound			South Bound			East Bound			West Bound		
Movement:	L - T - R			L - T - R			L - T - R			L - T - R		
Control:	Protected			Protected			Permitted			Permitted		
Rights:	Include			Include			Include			Include		
Min. Green:	0	0	0	0	0	0	0	0	0	0	0	0
Lanes:	1 0 1	1 0		1 0 1	1 0		1 0 1	0 1		0 1 0	1 0	
Volume Module:												
Base Vol:	346	803	33	57	243	9	18	325	268	8	227	61
Growth Adj:	1.00	1.00	1.00	1.00	1.00	1.00	1.00	1.00	1.00	1.00	1.00	1.00
Initial Bse:	346	803	33	57	243	9	18	325	268	8	227	61
Added Vol:	-170	-140	0	0	-46	50	208	0	-31	0	0	0
Committed P:	0	30	0	12	15	0	0	5	0	4	24	0
Initial Fut:	176	693	33	69	212	59	226	330	237	12	251	61
User Adj:	1.00	1.00	1.00	1.00	1.00	1.00	1.00	1.00	1.00	1.00	1.00	1.00
PHF Adj:	1.00	1.00	1.00	1.00	1.00	1.00	1.00	1.00	1.00	1.00	1.00	1.00
PHF Volume:	176	693	33	69	212	59	226	330	237	12	251	61
Reduct Vol:	0	0	0	0	0	0	0	0	0	0	0	0
Reduced Vol:	176	693	33	69	212	59	226	330	237	12	251	61
PCE Adj:	1.00	1.00	1.00	1.00	1.00	1.00	1.00	1.00	1.00	1.00	1.00	1.00
MLF Adj:	1.00	1.00	1.00	1.00	1.00	1.00	1.00	1.00	1.00	1.00	1.00	1.00
FinalVolume:	176	693	33	69	212	59	226	330	237	12	251	61
Saturation Flow Module:												
Sat/Lane:	1600	1600	1600	1600	1600	1600	1600	1600	1600	1600	1600	1600
Adjustment:	1.00	1.00	1.00	1.00	1.00	1.00	1.00	1.00	1.00	1.00	1.00	1.00
Lanes:	1.00	1.91	0.09	1.00	1.56	0.44	1.00	1.00	1.00	0.07	1.55	0.38
Final Sat.:	1600	3055	145	1600	2503	697	1600	1600	1600	119	2479	602
Capacity Analysis Module:												
Vol/Sat:	0.11	0.23	0.23	0.04	0.08	0.08	0.14	0.21	0.15	0.01	0.10	0.10
Crit Moves:		****		****			****				****	

Newport Banning Ranch
Year 2016 Cumulative Conditions with Project
AM Peak Hour

Level Of Service Computation Report
ICU 1(Loss as Cycle Length %) Method (Future Volume Alternative)

Intersection #5 Hospital Rd/Newport Blvd

Cycle (sec):	120	Critical Vol./Cap.(X):	0.539
Loss Time (sec):	0 (Y+R=4.0 sec)	Average Delay (sec/veh):	xxxxxx
Optimal Cycle:	49	Level Of Service:	A

Street Name:	Newport Boulevard						Hospital Road					
Approach:	North Bound			South Bound			East Bound			West Bound		
Movement:	L - T - R			L - T - R			L - T - R			L - T - R		
Control:	Protected			Protected			Protected			Protected		
Rights:	Include			Include			Include			Include		
Min. Green:	0	0	0	0	0	0	0	0	0	0	0	0
Lanes:	1 0 3 0 1			1 0 3 0 1			2 0 1 0 1			1 0 1 1 0		
Volume Module:												
Base Vol:	129	1373	96	56	1066	368	197	124	199	65	224	28
Growth Adj:	1.07	1.07	1.07	1.07	1.07	1.07	1.00	1.00	1.00	1.00	1.00	1.00
Initial Bse:	138	1472	103	60	1143	394	197	124	199	65	224	28
Added Vol:	6	6	2	8	13	0	0	1	2	10	0	3
Committed P:	23	49	0	0	64	10	12	0	9	0	1	0
Initial Fut:	167	1527	105	68	1220	404	209	125	210	75	225	31
User Adj:	1.00	1.00	1.00	1.00	1.00	1.00	1.00	1.00	1.00	1.00	1.00	1.00
PHF Adj:	1.00	1.00	1.00	1.00	1.00	1.00	1.00	1.00	1.00	1.00	1.00	1.00
PHF Volume:	167	1527	105	68	1220	404	209	125	210	75	225	31
Reduct Vol:	0	0	0	0	0	0	0	0	0	0	0	0
Reduced Vol:	167	1527	105	68	1220	404	209	125	210	75	225	31
PCE Adj:	1.00	1.00	1.00	1.00	1.00	1.00	1.00	1.00	1.00	1.00	1.00	1.00
MLF Adj:	1.00	1.00	1.00	1.00	1.00	1.00	1.00	1.00	1.00	1.00	1.00	1.00
FinalVolume:	167	1527	105	68	1220	404	209	125	210	75	225	31
Saturation Flow Module:												
Sat/Lane:	1600	1600	1600	1600	1600	1600	1600	1600	1600	1600	1600	1600
Adjustment:	1.00	1.00	1.00	1.00	1.00	1.00	1.00	1.00	1.00	1.00	1.00	1.00
Lanes:	1.00	3.00	1.00	1.00	3.00	1.00	2.00	1.00	1.00	1.00	1.76	0.24
Final Sat.:	1600	4800	1600	1600	4800	1600	3200	1600	1600	1600	2813	388
Capacity Analysis Module:												
Vol/Sat:	0.10	0.32	0.07	0.04	0.25	0.25	0.07	0.08	0.13	0.05	0.08	0.08
Crit Moves:		****		****					****	****		

Newport Banning Ranch
Year 2016 Cumulative Conditions with Project
AM Peak Hour

Level Of Service Computation Report
ICU 1(Loss as Cycle Length %) Method (Future Volume Alternative)

Intersection #6 Orange St/W. Coast Hwy

Cycle (sec):	120	Critical Vol./Cap.(X):	0.826
Loss Time (sec):	0 (Y+R=4.0 sec)	Average Delay (sec/veh):	xxxxxx
Optimal Cycle:	107	Level Of Service:	D

Street Name:	Orange Street						W. Coast Highway					
Approach:	North Bound			South Bound			East Bound			West Bound		
Movement:	L - T - R			L - T - R			L - T - R			L - T - R		
Control:	Permitted			Permitted			Protected			Protected		
Rights:	Include			Include			Include			Include		
Min. Green:	0	0	0	0	0	0	0	0	0	0	0	0
Lanes:	0 1 0 0 1			0 1 0 0 1			1 0 2 1 0			1 0 3 0 1		
Volume Module:												
Base Vol:	49	1	70	40	2	19	11	3095	10	43	870	17
Growth Adj:	1.00	1.00	1.00	1.00	1.00	1.00	1.07	1.07	1.07	1.07	1.07	1.07
Initial Bse:	49	1	70	40	2	19	12	3318	11	46	933	18
Added Vol:	0	0	0	0	0	4	4	161	0	0	300	0
Committed P:	0	0	0	0	0	0	0	62	0	0	37	0
Initial Fut:	49	1	70	40	2	23	16	3541	11	46	1270	18
User Adj:	1.00	1.00	1.00	1.00	1.00	1.00	1.00	1.00	1.00	1.00	1.00	1.00
PHF Adj:	1.00	1.00	1.00	1.00	1.00	1.00	1.00	1.00	1.00	1.00	1.00	1.00
PHF Volume:	49	1	70	40	2	23	16	3541	11	46	1270	18
Reduct Vol:	0	0	0	0	0	0	0	0	0	0	0	0
Reduced Vol:	49	1	70	40	2	23	16	3541	11	46	1270	18
PCE Adj:	1.00	1.00	1.00	1.00	1.00	1.00	1.00	1.00	1.00	1.00	1.00	1.00
MLF Adj:	1.00	1.00	1.00	1.00	1.00	1.00	1.00	1.00	1.00	1.00	1.00	1.00
FinalVolume:	49	1	70	40	2	23	16	3541	11	46	1270	18
Saturation Flow Module:												
Sat/Lane:	1600	1600	1600	1600	1600	1600	1600	1600	1600	1600	1600	1600
Adjustment:	1.00	1.00	1.00	1.00	1.00	1.00	1.00	1.00	1.00	1.00	1.00	1.00
Lanes:	0.98	0.02	1.00	0.95	0.05	1.00	1.00	2.99	0.01	1.00	3.00	1.00
Final Sat.:	1568	32	1600	1524	76	1600	1600	4786	14	1600	4800	1600
Capacity Analysis Module:												
Vol/Sat:	0.03	0.03	0.04	0.03	0.03	0.01	0.01	0.74	0.74	0.03	0.26	0.01
Crit Moves:	****				****			****		****		

Newport Banning Ranch
Year 2016 Cumulative Conditions with Project
AM Peak Hour

Level Of Service Computation Report
ICU 1(Loss as Cycle Length %) Method (Future Volume Alternative)

Intersection #7 Prospect St/W. Coast Hwy

Cycle (sec): 120 Critical Vol./Cap.(X): 0.814
Loss Time (sec): 0 (Y+R=4.0 sec) Average Delay (sec/veh): xxxxxx
Optimal Cycle: 100 Level Of Service: D

Street Name:	Prospect Street						W. Coast Highway					
Approach:	North Bound			South Bound			East Bound			West Bound		
Movement:	L - T - R			L - T - R			L - T - R			L - T - R		
Control:	Permitted			Permitted			Protected			Protected		
Rights:	Include			Include			Include			Include		
Min. Green:	0	0	0	0	0	0	0	0	0	0	0	0
Lanes:	0 1	0 0	1	0 0	1!	0 0	1 0	2 1	0	1 0	2 1	0
Volume Module:												
Base Vol:	19	0	33	267	0	7	17	2490	5	26	1112	34
Growth Adj:	1.00	1.00	1.00	1.00	1.00	1.00	1.07	1.07	1.07	1.07	1.07	1.07
Initial Bse:	19	0	33	267	0	7	18	2669	5	28	1192	36
Added Vol:	0	0	0	9	0	2	2	159	0	0	298	3
Committed P:	0	0	0	0	0	0	0	62	0	0	37	0
Initial Fut:	19	0	33	276	0	9	20	2890	5	28	1527	39
User Adj:	1.00	1.00	1.00	1.00	1.00	1.00	1.00	1.00	1.00	1.00	1.00	1.00
PHF Adj:	1.00	1.00	1.00	1.00	1.00	1.00	1.00	1.00	1.00	1.00	1.00	1.00
PHF Volume:	19	0	33	276	0	9	20	2890	5	28	1527	39
Reduct Vol:	0	0	0	0	0	0	0	0	0	0	0	0
Reduced Vol:	19	0	33	276	0	9	20	2890	5	28	1527	39
PCE Adj:	1.00	1.00	1.00	1.00	1.00	1.00	1.00	1.00	1.00	1.00	1.00	1.00
MLF Adj:	1.00	1.00	1.00	1.00	1.00	1.00	1.00	1.00	1.00	1.00	1.00	1.00
FinalVolume:	19	0	33	276	0	9	20	2890	5	28	1527	39
Saturation Flow Module:												
Sat/Lane:	1600	1600	1600	1600	1600	1600	1600	1600	1600	1600	1600	1600
Adjustment:	1.00	1.00	1.00	1.00	1.00	1.00	1.00	1.00	1.00	1.00	1.00	1.00
Lanes:	1.00	0.00	1.00	0.97	0.00	0.03	1.00	2.99	0.01	1.00	2.92	0.08
Final Sat.:	1600	0	1600	1549	0	51	1600	4791	9	1600	4679	121
Capacity Analysis Module:												
Vol/Sat:	0.01	0.00	0.02	0.17	0.00	0.18	0.01	0.60	0.60	0.02	0.33	0.33
Crit Moves:			****	****				****		****		

Newport Banning Ranch
Year 2016 Cumulative Conditions with Project
AM Peak Hour

Level Of Service Computation Report
ICU 1(Loss as Cycle Length %) Method (Future Volume Alternative)

Intersection #8 W. Coast Hwy/Superior Ave

Cycle (sec):	120	Critical Vol./Cap.(X):	0.730
Loss Time (sec):	0 (Y+R=4.0 sec)	Average Delay (sec/veh):	xxxxxx
Optimal Cycle:	85	Level Of Service:	C

Street Name:	Superior Avenue						W. Coast Highway					
Approach:	North Bound			South Bound			East Bound			West Bound		
Movement:	L - T - R			L - T - R			L - T - R			L - T - R		
Control:	Split Phase			Split Phase			Protected			Protected		
Rights:	Include			Ovl			Include			Include		
Min. Green:	0	0	0	0	0	0	0	0	0	0	0	0
Lanes:	1 1 0	1 0		1 1 1	0 2		2 0	3 0	1	1 0	3 1	0
Volume Module:												
Base Vol:	168	266	114	170	165	247	709	1914	211	95	768	155
Growth Adj:	1.00	1.00	1.00	1.00	1.00	1.00	1.07	1.07	1.07	1.07	1.07	1.07
Initial Bse:	168	266	114	170	165	247	760	2052	226	102	823	166
Added Vol:	23	0	0	24	0	-104	-329	158	49	0	150	13
Committed P:	1	6	0	0	3	12	24	49	0	0	42	0
Initial Fut:	192	272	114	194	168	155	455	2259	275	102	1015	179
User Adj:	1.00	1.00	1.00	1.00	1.00	1.00	1.00	1.00	1.00	1.00	1.00	1.00
PHF Adj:	1.00	1.00	1.00	1.00	1.00	1.00	1.00	1.00	1.00	1.00	1.00	1.00
PHF Volume:	192	272	114	194	168	155	455	2259	275	102	1015	179
Reduct Vol:	0	0	0	0	0	0	0	0	0	0	0	0
Reduced Vol:	192	272	114	194	168	155	455	2259	275	102	1015	179
PCE Adj:	1.00	1.00	1.00	1.00	1.00	1.00	1.00	1.00	1.00	1.00	1.00	1.00
MLF Adj:	1.00	1.00	1.00	1.00	1.00	1.00	1.00	1.00	1.00	1.00	1.00	1.00
FinalVolume:	192	272	114	194	168	155	455	2259	275	102	1015	179
OvlAdjVol:						0						
Saturation Flow Module:												
Sat/Lane:	1600	1600	1600	1600	1600	1600	1600	1600	1600	1600	1600	1600
Adjustment:	1.00	1.00	1.00	1.00	1.00	1.00	1.00	1.00	1.00	1.00	1.00	1.00
Lanes:	1.00	1.41	0.59	1.61	1.39	2.00	2.00	3.00	1.00	1.00	3.40	0.60
Final Sat.:	1600	2254	946	2572	2228	3200	3200	4800	1600	1600	5440	960
Capacity Analysis Module:												
Vol/Sat:	0.12	0.12	0.12	0.08	0.08	0.05	0.14	0.47	0.17	0.06	0.19	0.19
OvlAdjV/S:						0.00						
Crit Moves:	****			****				****		****		

Newport Banning Ranch
Year 2016 Cumulative Conditions with Project
AM Peak Hour

Level Of Service Computation Report
ICU 1(Loss as Cycle Length %) Method (Future Volume Alternative)

Intersection #9 Newport Blvd/W. Coast Hwy

Cycle (sec):	120	Critical Vol./Cap.(X):	0.961
Loss Time (sec):	0 (Y+R=4.0 sec)	Average Delay (sec/veh):	xxxxxx
Optimal Cycle:	180	Level Of Service:	E

Street Name:	Newport Boulevard						W. Coast Highway					
Approach:	North Bound			South Bound			East Bound			West Bound		
Movement:	L - T - R			L - T - R			L - T - R			L - T - R		
Control:	Protected			Protected			Protected			Protected		
Rights:	Include			Include			Ignore			Ignore		
Min. Green:	0	0	0	0	0	0	0	0	0	0	0	0
Lanes:	0 0 0 0 0			2 0 0 0 1			0 0 2 0 1			0 0 3 0 1		
Volume Module:												
Base Vol:	0	0	0	383	0	288	0	2082	188	0	812	349
Growth Adj:	1.00	1.00	1.00	1.00	1.00	1.00	1.00	1.07	1.07	1.00	1.07	1.07
Initial Bse:	0	0	0	383	0	288	0	2232	202	0	870	374
Added Vol:	0	0	0	18	0	2	0	182	0	0	161	6
Committed P:	0	0	0	17	0	35	0	12	4	0	42	0
Initial Fut:	0	0	0	418	0	325	0	2426	206	0	1073	380
User Adj:	1.00	1.00	1.00	1.00	1.00	1.00	1.00	1.00	0.00	1.00	1.00	0.00
PHF Adj:	1.00	1.00	1.00	1.00	1.00	1.00	1.00	1.00	0.00	1.00	1.00	0.00
PHF Volume:	0	0	0	418	0	325	0	2426	0	0	1073	0
Reduct Vol:	0	0	0	0	0	0	0	0	0	0	0	0
Reduced Vol:	0	0	0	418	0	325	0	2426	0	0	1073	0
PCE Adj:	1.00	1.00	1.00	1.00	1.00	1.00	1.00	1.00	0.00	1.00	1.00	0.00
MLF Adj:	1.00	1.00	1.00	1.00	1.00	1.00	1.00	1.00	0.00	1.00	1.00	0.00
FinalVolume:	0	0	0	418	0	325	0	2426	0	0	1073	0
Saturation Flow Module:												
Sat/Lane:	1600	1600	1600	1600	1600	1600	1600	1600	1600	1600	1600	1600
Adjustment:	1.00	1.00	1.00	1.00	1.00	1.00	1.00	1.00	1.00	1.00	1.00	1.00
Lanes:	0.00	0.00	0.00	2.00	0.00	1.00	0.00	2.00	1.00	0.00	3.00	1.00
Final Sat.:	0	0	0	3200	0	1600	0	3200	1600	0	4800	1600
Capacity Analysis Module:												
Vol/Sat:	0.00	0.00	0.00	0.13	0.00	0.20	0.00	0.76	0.00	0.00	0.22	0.00
Crit Moves:						****		****		****		

Newport Banning Ranch
Year 2016 Cumulative Conditions with Project
AM Peak Hour

Level Of Service Computation Report
ICU 1(Loss as Cycle Length %) Method (Future Volume Alternative)

Intersection #10 Riverside Ave/W. Coast Hwy

Cycle (sec):	120	Critical Vol./Cap.(X):	0.785
Loss Time (sec):	0 (Y+R=4.0 sec)	Average Delay (sec/veh):	xxxxxx
Optimal Cycle:	86	Level Of Service:	C

Street Name:	Riverside Avenue						W. Coast Highway					
Approach:	North Bound			South Bound			East Bound			West Bound		
Movement:	L - T - R			L - T - R			L - T - R			L - T - R		
Control:	Permitted			Permitted			Protected			Protected		
Rights:	Include			Ovl			Include			Include		
Min. Green:	0	0	0	0	0	0	0	0	0	0	0	0
Lanes:	0 0 0 0 1			0 1 0 0 1			1 0 1 1 0			1 0 3 0 1		
Volume Module:												
Base Vol:	0	0	1	77	4	304	312	1893	4	17	1124	67
Growth Adj:	1.00	1.00	1.00	1.00	1.00	1.00	1.07	1.07	1.07	1.07	1.07	1.07
Initial Bse:	0	0	1	77	4	304	334	2029	4	18	1205	72
Added Vol:	0	0	0	0	0	14	25	180	0	0	165	0
Committed P:	0	0	0	2	0	0	0	103	0	0	92	1
Initial Fut:	0	0	1	79	4	318	359	2312	4	18	1462	73
User Adj:	1.00	1.00	1.00	1.00	1.00	1.00	1.00	1.00	1.00	1.00	1.00	1.00
PHF Adj:	1.00	1.00	1.00	1.00	1.00	1.00	1.00	1.00	1.00	1.00	1.00	1.00
PHF Volume:	0	0	1	79	4	318	359	2312	4	18	1462	73
Reduct Vol:	0	0	0	0	0	0	0	0	0	0	0	0
Reduced Vol:	0	0	1	79	4	318	359	2312	4	18	1462	73
PCE Adj:	1.00	1.00	1.00	1.00	1.00	1.00	1.00	1.00	1.00	1.00	1.00	1.00
MLF Adj:	1.00	1.00	1.00	1.00	1.00	1.00	1.00	1.00	1.00	1.00	1.00	1.00
FinalVolume:	0	0	1	79	4	318	359	2312	4	18	1462	73
OvlAdjVol:						0						
Saturation Flow Module:												
Sat/Lane:	1600	1600	1600	1600	1600	1600	1600	1600	1600	1600	1600	1600
Adjustment:	1.00	1.00	1.00	1.00	1.00	1.00	1.00	1.00	1.00	1.00	1.00	1.00
Lanes:	0.00	0.00	1.00	0.95	0.05	1.00	1.00	1.99	0.01	1.00	3.00	1.00
Final Sat.:	0	0	1600	1523	77	1600	1600	3194	6	1600	4800	1600
Capacity Analysis Module:												
Vol/Sat:	0.00	0.00	0.00	0.05	0.05	0.20	0.22	0.72	0.72	0.01	0.30	0.05
OvlAdjV/S:						0.00						
Crit Moves:	****			****				****		****		

Newport Banning Ranch
Year 2016 Cumulative Conditions with Project
AM Peak Hour

Level Of Service Computation Report
ICU 1(Loss as Cycle Length %) Method (Future Volume Alternative)

Intersection #11 Tustin Ave/W. Coast Hwy

Cycle (sec):	120	Critical Vol./Cap.(X):	0.787
Loss Time (sec):	0 (Y+R=4.0 sec)	Average Delay (sec/veh):	xxxxxx
Optimal Cycle:	180	Level Of Service:	C

Street Name:	Tustin Avenue						W. Coast Highway					
Approach:	North Bound			South Bound			East Bound			West Bound		
Movement:	L - T - R			L - T - R			L - T - R			L - T - R		
Control:	Permitted			Permitted			Protected			Permitted		
Rights:	Include			Include			Include			Include		
Min. Green:	0	0	0	0	0	0	0	0	0	0	0	0
Lanes:	0 0	1! 0	0	0 0	1! 0	0	1 0	1 1	0	0 0	3 0	1
Volume Module:												
Base Vol:	0	0	0	33	1	14	42	1992	1	0	1220	35
Growth Adj:	1.00	1.00	1.00	1.00	1.00	1.00	1.07	1.07	1.07	1.07	1.07	1.07
Initial Bse:	0	0	0	33	1	14	45	2135	1	0	1308	38
Added Vol:	0	0	0	0	0	8	16	163	0	0	158	0
Committed P:	0	0	0	0	0	0	0	108	0	0	93	0
Initial Fut:	0	0	0	33	1	22	61	2406	1	0	1559	38
User Adj:	1.00	1.00	1.00	1.00	1.00	1.00	1.00	1.00	1.00	1.00	1.00	1.00
PHF Adj:	1.00	1.00	1.00	1.00	1.00	1.00	1.00	1.00	1.00	1.00	1.00	1.00
PHF Volume:	0	0	0	33	1	22	61	2406	1	0	1559	38
Reduct Vol:	0	0	0	0	0	0	0	0	0	0	0	0
Reduced Vol:	0	0	0	33	1	22	61	2406	1	0	1559	38
PCE Adj:	1.00	1.00	1.00	1.00	1.00	1.00	1.00	1.00	1.00	1.00	1.00	1.00
MLF Adj:	1.00	1.00	1.00	1.00	1.00	1.00	1.00	1.00	1.00	1.00	1.00	1.00
FinalVolume:	0	0	0	33	1	22	61	2406	1	0	1559	38
Saturation Flow Module:												
Sat/Lane:	1600	1600	1600	1600	1600	1600	1600	1600	1600	1600	1600	1600
Adjustment:	1.00	1.00	1.00	1.00	1.00	1.00	1.00	1.00	1.00	1.00	1.00	1.00
Lanes:	0.00	1.00	0.00	0.59	0.02	0.39	1.00	1.99	0.01	0.00	3.00	1.00
Final Sat.:	0	1600	0	943	29	629	1600	3199	1	0	4800	1600
Capacity Analysis Module:												
Vol/Sat:	0.00	0.00	0.00	0.02	0.03	0.03	0.04	0.75	0.75	0.00	0.32	0.02
Crit Moves:					****			****				

Newport Banning Ranch
Year 2016 Cumulative Conditions with Project
AM Peak Hour

Level Of Service Computation Report
ICU 1(Loss as Cycle Length %) Method (Future Volume Alternative)

Intersection #12 Dover Dr/W. Coast Hwy

Cycle (sec):	120	Critical Vol./Cap.(X):	0.727
Loss Time (sec):	0 (Y+R=4.0 sec)	Average Delay (sec/veh):	xxxxxx
Optimal Cycle:	83	Level Of Service:	C

Street Name:	Dover Drive						W. Coast Highway					
Approach:	North Bound			South Bound			East Bound			West Bound		
Movement:	L - T - R			L - T - R			L - T - R			L - T - R		
Control:	Split Phase			Split Phase			Protected			Protected		
Rights:	Include			Include			Include			Ignore		
Min. Green:	0	0	0	0	0	0	0	0	0	0	0	0
Lanes:	1 0 1	1 0		3 0 1	0 1		2 0 2	1 0		1 0 3	0 1	
Volume Module:												
Base Vol:	16	61	29	840	51	108	117	1912	25	42	1212	469
Growth Adj:	1.00	1.00	1.00	1.00	1.00	1.00	1.07	1.07	1.07	1.07	1.07	1.07
Initial Bse:	16	61	29	840	51	108	125	2050	27	45	1299	503
Added Vol:	3	0	0	44	0	7	9	152	3	0	148	102
Committed P:	0	0	0	9	0	18	10	93	0	0	91	7
Initial Fut:	19	61	29	893	51	133	144	2295	30	45	1538	612
User Adj:	1.00	1.00	1.00	1.00	1.00	1.00	1.00	1.00	1.00	1.00	1.00	0.00
PHF Adj:	1.00	1.00	1.00	1.00	1.00	1.00	1.00	1.00	1.00	1.00	1.00	0.00
PHF Volume:	19	61	29	893	51	133	144	2295	30	45	1538	0
Reduct Vol:	0	0	0	0	0	0	0	0	0	0	0	0
Reduced Vol:	19	61	29	893	51	133	144	2295	30	45	1538	0
PCE Adj:	1.00	1.00	1.00	1.00	1.00	1.00	1.00	1.00	1.00	1.00	1.00	0.00
MLF Adj:	1.00	1.00	1.00	1.00	1.00	1.00	1.00	1.00	1.00	1.00	1.00	0.00
FinalVolume:	19	61	29	893	51	133	144	2295	30	45	1538	0
Saturation Flow Module:												
Sat/Lane:	1600	1600	1600	1600	1600	1600	1600	1600	1600	1600	1600	1600
Adjustment:	1.00	1.00	1.00	1.00	1.00	1.00	1.00	1.00	1.00	1.00	1.00	1.00
Lanes:	1.00	1.36	0.64	3.00	1.00	1.00	2.00	2.96	0.04	1.00	3.00	1.00
Final Sat.:	1600	2169	1031	4800	1600	1600	3200	4738	62	1600	4800	1600
Capacity Analysis Module:												
Vol/Sat:	0.01	0.03	0.03	0.19	0.03	0.08	0.05	0.48	0.48	0.03	0.32	0.00
Crit Moves:			****	****				****		****		

Newport Banning Ranch
Year 2016 Cumulative Conditions with Project
AM Peak Hour

Level Of Service Computation Report
ICU 1(Loss as Cycle Length %) Method (Future Volume Alternative)

Intersection #13 Magnolia St/Hamilton Ave

Cycle (sec):	100	Critical Vol./Cap.(X):	0.667
Loss Time (sec):	5 (Y+R=4.0 sec)	Average Delay (sec/veh):	xxxxxx
Optimal Cycle:	34	Level Of Service:	B

Street Name:	Magnolia Street						Hamilton Avenue					
Approach:	North Bound			South Bound			East Bound			West Bound		
Movement:	L - T - R			L - T - R			L - T - R			L - T - R		
Control:	Prot+Permit			Prot+Permit			Permitted			Permitted		
Rights:	Include			Include			Include			Include		
Min. Green:	0	0	0	0	0	0	0	0	0	0	0	0
Lanes:	1 0 1	1 0		1 0 2	0 1		1 0 0	1 0		1 0 1	0 1	
Volume Module:												
Base Vol:	56	241	42	197	303	35	67	273	145	66	172	368
Growth Adj:	1.07	1.07	1.07	1.07	1.07	1.07	1.07	1.07	1.07	1.07	1.07	1.07
Initial Bse:	60	258	45	211	325	38	72	293	155	71	184	394
Added Vol:	57	93	34	5	35	9	30	52	30	12	33	9
Committed P:	2	3	0	0	6	0	0	0	3	0	0	0
Initial Fut:	119	354	79	216	366	47	102	345	188	83	217	403
User Adj:	1.00	1.00	1.00	1.00	1.00	1.00	1.00	1.00	1.00	1.00	1.00	1.00
PHF Adj:	1.00	1.00	1.00	1.00	1.00	1.00	1.00	1.00	1.00	1.00	1.00	1.00
PHF Volume:	119	354	79	216	366	47	102	345	188	83	217	403
Reduct Vol:	0	0	0	0	0	0	0	0	0	0	0	0
Reduced Vol:	119	354	79	216	366	47	102	345	188	83	217	403
PCE Adj:	1.00	1.00	1.00	1.00	1.00	1.00	1.00	1.00	1.00	1.00	1.00	1.00
MLF Adj:	1.00	1.00	1.00	1.00	1.00	1.00	1.00	1.00	1.00	1.00	1.00	1.00
FinalVolume:	119	354	79	216	366	47	102	345	188	83	217	403
Saturation Flow Module:												
Sat/Lane:	1600	1600	1600	1600	1600	1600	1600	1600	1600	1600	1600	1600
Adjustment:	1.06	1.06	1.06	1.06	1.06	1.06	1.06	1.06	1.06	1.06	1.06	1.06
Lanes:	1.00	1.64	0.36	1.00	2.00	1.00	1.00	0.65	0.35	1.00	1.00	1.00
Final Sat.:	1700	2780	620	1700	3400	1700	1700	1099	601	1700	1700	1700
Capacity Analysis Module:												
Vol/Sat:	0.07	0.13	0.13	0.13	0.11	0.03	0.06	0.31	0.31	0.05	0.13	0.24
Crit Moves:		****		****				****		****		

Newport Banning Ranch
Year 2016 Cumulative Conditions with Project
AM Peak Hour

Level Of Service Computation Report
ICU 1(Loss as Cycle Length %) Method (Future Volume Alternative)

Intersection #14 Bushard St/Hamilton Ave

Cycle (sec):	100	Critical Vol./Cap.(X):	0.476
Loss Time (sec):	5 (Y+R=4.0 sec)	Average Delay (sec/veh):	xxxxxx
Optimal Cycle:	23	Level Of Service:	A

Street Name:	Bushard Street						Hamilton Avenue					
Approach:	North Bound			South Bound			East Bound			West Bound		
Movement:	L - T - R			L - T - R			L - T - R			L - T - R		
Control:	Permitted			Permitted			Permitted			Permitted		
Rights:	Include			Include			Include			Include		
Min. Green:	0	0	0	0	0	0	0	0	0	0	0	0
Lanes:	1 0 1	1 0		1 0 1	1 0		1 0 1	1 0		1 0 1	1 0	
Volume Module:												
Base Vol:	66	176	51	188	297	145	59	526	33	52	409	94
Growth Adj:	1.07	1.07	1.07	1.07	1.07	1.07	1.07	1.07	1.07	1.07	1.07	1.07
Initial Bse:	71	189	55	202	318	155	63	564	35	56	438	101
Added Vol:	0	0	0	0	0	0	0	91	0	0	55	0
Committed P:	0	0	0	0	0	0	0	0	0	0	0	0
Initial Fut:	71	189	55	202	318	155	63	655	35	56	493	101
User Adj:	1.00	1.00	1.00	1.00	1.00	1.00	1.00	1.00	1.00	1.00	1.00	1.00
PHF Adj:	1.00	1.00	1.00	1.00	1.00	1.00	1.00	1.00	1.00	1.00	1.00	1.00
PHF Volume:	71	189	55	202	318	155	63	655	35	56	493	101
Reduct Vol:	0	0	0	0	0	0	0	0	0	0	0	0
Reduced Vol:	71	189	55	202	318	155	63	655	35	56	493	101
PCE Adj:	1.00	1.00	1.00	1.00	1.00	1.00	1.00	1.00	1.00	1.00	1.00	1.00
MLF Adj:	1.00	1.00	1.00	1.00	1.00	1.00	1.00	1.00	1.00	1.00	1.00	1.00
FinalVolume:	71	189	55	202	318	155	63	655	35	56	493	101
Saturation Flow Module:												
Sat/Lane:	1600	1600	1600	1600	1600	1600	1600	1600	1600	1600	1600	1600
Adjustment:	1.06	1.06	1.06	1.06	1.06	1.06	1.06	1.06	1.06	1.06	1.06	1.06
Lanes:	1.00	1.55	0.45	1.00	1.34	0.66	1.00	1.90	0.10	1.00	1.66	0.34
Final Sat.:	1700	2636	764	1700	2285	1115	1700	3226	174	1700	2823	577
Capacity Analysis Module:												
Vol/Sat:	0.04	0.07	0.07	0.12	0.14	0.14	0.04	0.20	0.20	0.03	0.17	0.17
Crit Moves:		****		****				****		****		

Newport Banning Ranch
Year 2016 Cumulative Conditions with Project
AM Peak Hour

Level Of Service Computation Report
ICU 1(Loss as Cycle Length %) Method (Future Volume Alternative)

Intersection #15 Brookhurst St/Hamilton Ave (Victoria St)

Cycle (sec):	100	Critical Vol./Cap.(X):	0.728
Loss Time (sec):	5 (Y+R=4.0 sec)	Average Delay (sec/veh):	xxxxxx
Optimal Cycle:	40	Level Of Service:	C

Street Name:	Brookhurst						Hamilton Avenue (Victoria Street)					
Approach:	North Bound			South Bound			East Bound			West Bound		
Movement:	L - T - R			L - T - R			L - T - R			L - T - R		
Control:	Protected			Protected			Prot+Permit			Prot+Permit		
Rights:	Include			Include			Include			Include		
Min. Green:	0	0	0	0	0	0	0	0	0	0	0	0
Lanes:	1 0 3 0 1			2 0 2 1 0			1 0 1 1 0			1 0 2 0 1		
Volume Module:												
Base Vol:	59	289	321	501	483	110	95	683	47	124	348	277
Growth Adj:	1.07	1.07	1.07	1.07	1.07	1.07	1.07	1.07	1.07	1.07	1.07	1.07
Initial Bse:	63	310	344	537	518	118	102	732	50	133	373	297
Added Vol:	18	41	0	4	17	21	64	18	9	1	16	11
Committed P:	0	1	0	0	3	0	0	0	0	0	0	0
Initial Fut:	81	352	344	541	538	139	166	750	59	134	389	308
User Adj:	1.00	1.00	1.00	1.00	1.00	1.00	1.00	1.00	1.00	1.00	1.00	1.00
PHF Adj:	1.00	1.00	1.00	1.00	1.00	1.00	1.00	1.00	1.00	1.00	1.00	1.00
PHF Volume:	81	352	344	541	538	139	166	750	59	134	389	308
Reduct Vol:	0	0	0	0	0	0	0	0	0	0	0	0
Reduced Vol:	81	352	344	541	538	139	166	750	59	134	389	308
PCE Adj:	1.00	1.00	1.00	1.00	1.00	1.00	1.00	1.00	1.00	1.00	1.00	1.00
MLF Adj:	1.00	1.00	1.00	1.00	1.00	1.00	1.00	1.00	1.00	1.00	1.00	1.00
FinalVolume:	81	352	344	541	538	139	166	750	59	134	389	308
Saturation Flow Module:												
Sat/Lane:	1600	1600	1600	1600	1600	1600	1600	1600	1600	1600	1600	1600
Adjustment:	1.06	1.06	1.06	1.06	1.06	1.06	1.06	1.06	1.06	1.06	1.06	1.06
Lanes:	1.00	3.00	1.00	2.00	2.38	0.62	1.00	1.85	0.15	1.00	2.00	1.00
Final Sat.:	1700	5100	1700	3400	4053	1047	1700	3151	249	1700	3400	1700
Capacity Analysis Module:												
Vol/Sat:	0.05	0.07	0.20	0.16	0.13	0.13	0.10	0.24	0.24	0.08	0.11	0.18
Crit Moves:			****	****				****		****		

Newport Banning Ranch
Year 2016 Cumulative Conditions with Project
AM Peak Hour

Level Of Service Computation Report
ICU 1(Loss as Cycle Length %) Method (Future Volume Alternative)

Intersection #16 Magnolia St/Banning Ave

Cycle (sec):	100	Critical Vol./Cap.(X):	0.274
Loss Time (sec):	5 (Y+R=4.0 sec)	Average Delay (sec/veh):	xxxxxx
Optimal Cycle:	17	Level Of Service:	A

Street Name:	Magnolia Street									Banning Avenue								
Approach:	North Bound			South Bound			East Bound			West Bound		
Movement:	L	- T	- R	L	- T	- R	L	- T	- R	L	- T	- R
Control:	Protected			Protected			Split Phase			Split Phase		
Rights:	Include			Include			Include			Include		
Min. Green:	0	0	0	0	0	0	0	0	0	0	0	0
Lanes:	0 0	1 1	0	1 0	2 0	0	0 0	0 0	0	2 0	0 0	1
Volume Module:												
Base Vol:	0	197	37	82	376	0	0	0	0	62	0	112
Growth Adj:	1.07	1.07	1.07	1.07	1.07	1.07	1.07	1.07	1.07	1.07	1.07	1.07
Initial Bse:	0	211	40	88	403	0	0	0	0	66	0	120
Added Vol:	0	80	1	2	67	0	0	0	0	0	0	1
Committed P:	0	7	0	0	12	0	0	0	0	0	0	0
Initial Fut:	0	298	41	90	482	0	0	0	0	66	0	121
User Adj:	1.00	1.00	1.00	1.00	1.00	1.00	1.00	1.00	1.00	1.00	1.00	1.00
PHF Adj:	1.00	1.00	1.00	1.00	1.00	1.00	1.00	1.00	1.00	1.00	1.00	1.00
PHF Volume:	0	298	41	90	482	0	0	0	0	66	0	121
Reduct Vol:	0	0	0	0	0	0	0	0	0	0	0	0
Reduced Vol:	0	298	41	90	482	0	0	0	0	66	0	121
PCE Adj:	1.00	1.00	1.00	1.00	1.00	1.00	1.00	1.00	1.00	1.00	1.00	1.00
MLF Adj:	1.00	1.00	1.00	1.00	1.00	1.00	1.00	1.00	1.00	1.00	1.00	1.00
FinalVolume:	0	298	41	90	482	0	0	0	0	66	0	121
Saturation Flow Module:												
Sat/Lane:	1600	1600	1600	1600	1600	1600	1600	1600	1600	1600	1600	1600
Adjustment:	1.06	1.06	1.06	1.06	1.06	1.06	1.06	1.06	1.06	1.06	1.06	1.06
Lanes:	0.00	1.76	0.24	1.00	2.00	0.00	0.00	0.00	0.00	2.00	0.00	1.00
Final Sat.:	0	2992	408	1700	3400	0	0	0	0	3400	0	1700
Capacity Analysis Module:												
Vol/Sat:	0.00	0.10	0.10	0.05	0.14	0.00	0.00	0.00	0.00	0.02	0.00	0.07
Crit Moves:		****		****								****

Newport Banning Ranch
Year 2016 Cumulative Conditions with Project
AM Peak Hour

Level Of Service Computation Report
2000 HCM 4-Way Stop Method (Future Volume Alternative)

Intersection #17 Bushard St/Banning Ave

Cycle (sec):	100	Critical Vol./Cap.(X):	0.305
Loss Time (sec):	5 (Y+R=4.0 sec)	Average Delay (sec/veh):	10.3
Optimal Cycle:	0	Level Of Service:	B

Street Name:	Bushard Street						Banning Avenue					
Approach:	North Bound			South Bound			East Bound			West Bound		
Movement:	L - T - R			L - T - R			L - T - R			L - T - R		
Control:	Stop Sign			Stop Sign			Stop Sign			Stop Sign		
Rights:	Include			Include			Include			Include		
Min. Green:	0	0	0	0	0	0	0	0	0	0	0	0
Lanes:	1 0 1	1 0		1 0 1	1 0		1 0 0	1 0		1 0 0	1 0	
Volume Module:												
Base Vol:	14	86	15	16	220	121	53	84	28	7	114	19
Growth Adj:	1.07	1.07	1.07	1.07	1.07	1.07	1.07	1.07	1.07	1.07	1.07	1.07
Initial Bse:	15	92	16	17	236	130	57	90	30	8	122	20
Added Vol:	1	0	0	0	0	0	0	1	1	0	2	0
Committed P:	0	0	0	0	3	0	0	0	0	0	0	0
Initial Fut:	16	92	16	17	239	130	57	91	31	8	124	20
User Adj:	1.00	1.00	1.00	1.00	1.00	1.00	1.00	1.00	1.00	1.00	1.00	1.00
PHF Adj:	1.00	1.00	1.00	1.00	1.00	1.00	1.00	1.00	1.00	1.00	1.00	1.00
PHF Volume:	16	92	16	17	239	130	57	91	31	8	124	20
Reduct Vol:	0	0	0	0	0	0	0	0	0	0	0	0
Reduced Vol:	16	92	16	17	239	130	57	91	31	8	124	20
PCE Adj:	1.00	1.00	1.00	1.00	1.00	1.00	1.00	1.00	1.00	1.00	1.00	1.00
MLF Adj:	1.00	1.00	1.00	1.00	1.00	1.00	1.00	1.00	1.00	1.00	1.00	1.00
FinalVolume:	16	92	16	17	239	130	57	91	31	8	124	20
Saturation Flow Module:												
Adjustment:	1.00	1.00	1.00	1.00	1.00	1.00	1.00	1.00	1.00	1.00	1.00	1.00
Lanes:	1.00	1.70	0.30	1.00	1.30	0.70	1.00	0.75	0.25	1.00	0.86	0.14
Final Sat.:	493	915	163	544	782	453	523	434	148	518	490	80
Capacity Analysis Module:												
Vol/Sat:	0.03	0.10	0.10	0.03	0.31	0.29	0.11	0.21	0.21	0.01	0.25	0.25
Crit Moves:		****			****			****				****
Delay/Veh:	9.8	9.6	9.5	9.3	10.8	10.1	10.0	10.0	10.0	9.4	10.5	10.5
Delay Adj:	1.00	1.00	1.00	1.00	1.00	1.00	1.00	1.00	1.00	1.00	1.00	1.00
AdjDel/Veh:	9.8	9.6	9.5	9.3	10.8	10.1	10.0	10.0	10.0	9.4	10.5	10.5
LOS by Move:	A	A	A	A	B	B	A	A	A	A	B	B
ApproachDel:		9.6			10.5			10.0			10.5	
Delay Adj:		1.00			1.00			1.00			1.00	
ApprAdjDel:		9.6			10.5			10.0			10.5	
LOS by Appr:		A			B			A			B	
AllWayAvgQ:	0.0	0.1	0.1	0.0	0.4	0.4	0.1	0.2	0.2	0.0	0.3	0.3

Newport Banning Ranch
Year 2016 Cumulative Conditions with Project
AM Peak Hour

Note: Queue reported is the number of cars per lane.

Newport Banning Ranch
Year 2016 Cumulative Conditions with Project
AM Peak Hour

Level Of Service Computation Report
ICU 1(Loss as Cycle Length %) Method (Future Volume Alternative)

Intersection #18 Brookhurst St/Banning Ave

Cycle (sec):	100	Critical Vol./Cap.(X):	0.275
Loss Time (sec):	5 (Y+R=4.0 sec)	Average Delay (sec/veh):	xxxxxx
Optimal Cycle:	17	Level Of Service:	A

Street Name:	Brookhurst Street						Banning Avenue					
Approach:	North Bound			South Bound			East Bound			West Bound		
Movement:	L - T - R			L - T - R			L - T - R			L - T - R		
Control:	Protected			Protected			Split Phase			Split Phase		
Rights:	Include			Include			Include			Include		
Min. Green:	0	0	0	0	0	0	0	0	0	0	0	0
Lanes:	1 0 3 0 0			0 0 2 1 0			1 0 0 0 1			0 0 0 0 0		
Volume Module:												
Base Vol:	7	477	0	0	535	102	126	0	14	0	0	0
Growth Adj:	1.07	1.07	1.07	1.07	1.07	1.07	1.07	1.07	1.07	1.07	1.07	1.07
Initial Bse:	8	511	0	0	574	109	135	0	15	0	0	0
Added Vol:	0	58	0	0	26	2	1	0	0	0	0	0
Committed P:	0	3	0	0	6	0	0	0	0	0	0	0
Initial Fut:	8	572	0	0	606	111	136	0	15	0	0	0
User Adj:	1.00	1.00	1.00	1.00	1.00	1.00	1.00	1.00	1.00	1.00	1.00	1.00
PHF Adj:	1.00	1.00	1.00	1.00	1.00	1.00	1.00	1.00	1.00	1.00	1.00	1.00
PHF Volume:	8	572	0	0	606	111	136	0	15	0	0	0
Reduct Vol:	0	0	0	0	0	0	0	0	0	0	0	0
Reduced Vol:	8	572	0	0	606	111	136	0	15	0	0	0
PCE Adj:	1.00	1.00	1.00	1.00	1.00	1.00	1.00	1.00	1.00	1.00	1.00	1.00
MLF Adj:	1.00	1.00	1.00	1.00	1.00	1.00	1.00	1.00	1.00	1.00	1.00	1.00
FinalVolume:	8	572	0	0	606	111	136	0	15	0	0	0
Saturation Flow Module:												
Sat/Lane:	1600	1600	1600	1600	1600	1600	1600	1600	1600	1600	1600	1600
Adjustment:	1.06	1.06	1.06	1.06	1.06	1.06	1.06	1.06	1.06	1.06	1.06	1.06
Lanes:	1.00	3.00	0.00	0.00	2.53	0.47	1.00	0.00	1.00	0.00	0.00	0.00
Final Sat.:	1700	5100	0	0	4308	792	1700	0	1700	0	0	0
Capacity Analysis Module:												
Vol/Sat:	0.00	0.11	0.00	0.00	0.14	0.14	0.08	0.00	0.01	0.00	0.00	0.00
Crit Moves:	****				****		****					

Newport Banning Ranch
Year 2016 Cumulative Conditions with Project
AM Peak Hour

Level Of Service Computation Report
ICU 1(Loss as Cycle Length %) Method (Future Volume Alternative)

Intersection #19 Magnolia St/PCH

Cycle (sec):	120	Critical Vol./Cap.(X):	0.546
Loss Time (sec):	6 (Y+R=4.0 sec)	Average Delay (sec/veh):	xxxxxx
Optimal Cycle:	29	Level Of Service:	A

Street Name:	Magnolia Street						Pacific Coast Highway					
Approach:	North Bound			South Bound			East Bound			West Bound		
Movement:	L - T - R			L - T - R			L - T - R			L - T - R		
Control:	Split Phase			Split Phase			Protected			Protected		
Rights:	Include			Include			Include			Include		
Min. Green:	0	0	0	0	0	0	0	0	0	0	0	0
Lanes:	1 0 0 1 0			1 1 0 0 1			1 0 3 0 1			1 0 3 0 1		
Volume Module:												
Base Vol:	3	24	7	232	41	137	116	1607	17	18	614	50
Growth Adj:	1.07	1.07	1.07	1.07	1.07	1.07	1.07	1.07	1.07	1.07	1.07	1.07
Initial Bse:	3	26	8	249	44	147	124	1723	18	19	658	54
Added Vol:	0	0	0	43	0	25	16	95	0	0	182	65
Committed P:	0	0	0	12	0	0	0	35	0	0	21	7
Initial Fut:	3	26	8	304	44	172	140	1853	18	19	861	126
User Adj:	1.00	1.00	1.00	1.00	1.00	1.00	1.00	1.00	1.00	1.00	1.00	1.00
PHF Adj:	1.00	1.00	1.00	1.00	1.00	1.00	1.00	1.00	1.00	1.00	1.00	1.00
PHF Volume:	3	26	8	304	44	172	140	1853	18	19	861	126
Reduct Vol:	0	0	0	0	0	0	0	0	0	0	0	0
Reduced Vol:	3	26	8	304	44	172	140	1853	18	19	861	126
PCE Adj:	1.00	1.00	1.00	1.00	1.00	1.00	1.00	1.00	1.00	1.00	1.00	1.00
MLF Adj:	1.00	1.00	1.00	1.00	1.00	1.00	1.00	1.00	1.00	1.00	1.00	1.00
FinalVolume:	3	26	8	304	44	172	140	1853	18	19	861	126
Saturation Flow Module:												
Sat/Lane:	1600	1600	1600	1600	1600	1600	1600	1600	1600	1600	1600	1600
Adjustment:	1.06	1.06	1.06	1.06	1.06	1.06	1.06	1.06	1.06	1.06	1.06	1.06
Lanes:	1.00	0.77	0.23	1.75	0.25	1.00	1.00	3.00	1.00	1.00	3.00	1.00
Final Sat.:	1700	1316	384	2970	430	1700	1700	5100	1700	1700	5100	1700
Capacity Analysis Module:												
Vol/Sat:	0.00	0.02	0.02	0.10	0.10	0.10	0.08	0.36	0.01	0.01	0.17	0.07
Crit Moves:		****			****			****		****		

Newport Banning Ranch
Year 2016 Cumulative Conditions with Project
AM Peak Hour

Level Of Service Computation Report
ICU 1(Loss as Cycle Length %) Method (Future Volume Alternative)

Intersection #20 Brookhurst St/Bushard St

Cycle (sec):	100	Critical Vol./Cap.(X):	0.352
Loss Time (sec):	5 (Y+R=4.0 sec)	Average Delay (sec/veh):	xxxxxx
Optimal Cycle:	19	Level Of Service:	A

Street Name:	Brookhurst Street									Bushard Street								
Approach:	North Bound					South Bound				East Bound					West Bound			
Movement:	L	-	T	-	R	L	-	T	-	R	L	-	T	-	R	L	-	T	-	R
Control:	Protected					Protected					Permitted					Permitted				
Rights:	Include					Include					Include					Include				
Min. Green:	0	0	0			0	0	0			0	0	0			0	0	0		
Lanes:	1	0	2	1	0	1	0	3	0	1	1	0	0	0	1	0	0	0	1	0
Volume Module:																				
Base Vol:	79	427	2			2	487	10			8	0	210			0	1	4		
Growth Adj:	1.07	1.07	1.07			1.07	1.07	1.07			1.07	1.07	1.07			1.07	1.07	1.07		
Initial Bse:	85	458	2			2	522	11			9	0	225			0	1	4		
Added Vol:	3	58	0			0	26	0			0	0	6			0	0	0		
Committed P:	3	6	0			0	9	0			0	0	6			0	0	0		
Initial Fut:	91	522	2			2	557	11			9	0	237			0	1	4		
User Adj:	1.00	1.00	1.00			1.00	1.00	1.00			1.00	1.00	1.00			1.00	1.00	1.00		
PHF Adj:	1.00	1.00	1.00			1.00	1.00	1.00			1.00	1.00	1.00			1.00	1.00	1.00		
PHF Volume:	91	522	2			2	557	11			9	0	237			0	1	4		
Reduct Vol:	0	0	0			0	0	0			0	0	0			0	0	0		
Reduced Vol:	91	522	2			2	557	11			9	0	237			0	1	4		
PCE Adj:	1.00	1.00	1.00			1.00	1.00	1.00			1.00	1.00	1.00			1.00	1.00	1.00		
MLF Adj:	1.00	1.00	1.00			1.00	1.00	1.00			1.00	1.00	1.00			1.00	1.00	1.00		
FinalVolume:	91	522	2			2	557	11			9	0	237			0	1	4		
Saturation Flow Module:																				
Sat/Lane:	1600	1600	1600			1600	1600	1600			1600	1600	1600			1600	1600	1600		
Adjustment:	1.06	1.06	1.06			1.06	1.06	1.06			1.06	1.06	1.06			1.06	1.06	1.06		
Lanes:	1.00	2.99	0.01			1.00	3.00	1.00			1.00	0.00	1.00			0.00	0.20	0.80		
Final Sat.:	1700	5079	21			1700	5100	1700			1700	0	1700			0	340	1360		
Capacity Analysis Module:																				
Vol/Sat:	0.05	0.10	0.10			0.00	0.11	0.01			0.01	0.00	0.14			0.00	0.00	0.00		
Crit Moves:	****						****						****			****				

Newport Banning Ranch
Year 2016 Cumulative Conditions with Project
AM Peak Hour

Level Of Service Computation Report
ICU 1(Loss as Cycle Length %) Method (Future Volume Alternative)

Intersection #21 Brookhurst St/PCH

Cycle (sec):	120	Critical Vol./Cap.(X):	0.646
Loss Time (sec):	6 (Y+R=4.0 sec)	Average Delay (sec/veh):	xxxxxx
Optimal Cycle:	36	Level Of Service:	B

Street Name:	Brookhurst Street						Pacific Coast HIghway					
Approach:	North Bound			South Bound			East Bound			West Bound		
Movement:	L - T - R			L - T - R			L - T - R			L - T - R		
Control:	Split Phase			Split Phase			Protected			Protected		
Rights:	Include			Include			Include			Ovl		
Min. Green:	0	0	0	0	0	0	0	0	0	0	0	0
Lanes:	1 0 0 1 0			2 0 1 0 1			1 0 3 0 1			1 0 3 0 1		
Volume Module:												
Base Vol:	4	19	12	513	6	117	166	1721	2	6	639	305
Growth Adj:	1.07	1.07	1.07	1.07	1.07	1.07	1.07	1.07	1.07	1.07	1.07	1.07
Initial Bse:	4	20	13	550	6	125	178	1845	2	6	685	327
Added Vol:	0	0	0	29	0	2	2	136	0	0	245	59
Committed P:	0	0	0	15	0	0	0	47	0	0	28	9
Initial Fut:	4	20	13	594	6	127	180	2028	2	6	958	395
User Adj:	1.00	1.00	1.00	1.00	1.00	1.00	1.00	1.00	1.00	1.00	1.00	1.00
PHF Adj:	1.00	1.00	1.00	1.00	1.00	1.00	1.00	1.00	1.00	1.00	1.00	1.00
PHF Volume:	4	20	13	594	6	127	180	2028	2	6	958	395
Reduct Vol:	0	0	0	0	0	0	0	0	0	0	0	0
Reduced Vol:	4	20	13	594	6	127	180	2028	2	6	958	395
PCE Adj:	1.00	1.00	1.00	1.00	1.00	1.00	1.00	1.00	1.00	1.00	1.00	1.00
MLF Adj:	1.00	1.00	1.00	1.00	1.00	1.00	1.00	1.00	1.00	1.00	1.00	1.00
FinalVolume:	4	20	13	594	6	127	180	2028	2	6	958	395
OvlAdjVol:												98
Saturation Flow Module:												
Sat/Lane:	1600	1600	1600	1600	1600	1600	1600	1600	1600	1600	1600	1600
Adjustment:	1.06	1.06	1.06	1.06	1.06	1.06	1.06	1.06	1.06	1.06	1.06	1.06
Lanes:	1.00	0.61	0.39	2.00	1.00	1.00	1.00	3.00	1.00	1.00	3.00	1.00
Final Sat.:	1700	1042	658	3400	1700	1700	1700	5100	1700	1700	5100	1700
Capacity Analysis Module:												
Vol/Sat:	0.00	0.02	0.02	0.17	0.00	0.07	0.11	0.40	0.00	0.00	0.19	0.23
OvlAdjV/S:												0.06
Crit Moves:		****		****				****		****		

Newport Banning Ranch
Year 2016 Cumulative Conditions with Project
AM Peak Hour

Level Of Service Computation Report
ICU 1(Loss as Cycle Length %) Method (Future Volume Alternative)

Intersection #22 Placentia Ave/Victoria St

Cycle (sec):	100	Critical Vol./Cap.(X):	0.863
Loss Time (sec):	0 (Y+R=4.0 sec)	Average Delay (sec/veh):	xxxxxx
Optimal Cycle:	166	Level Of Service:	D

Street Name:	Placentia Avenue						Victoria Street					
Approach:	North Bound			South Bound			East Bound			West Bound		
Movement:	L - T - R			L - T - R			L - T - R			L - T - R		
Control:	Protected			Protected			Protected			Protected		
Rights:	Include			Include			Ovl			Include		
Min. Green:	0	0	0	0	0	0	0	0	0	0	0	0
Lanes:	2 0 2	0 1		1 0 2	0 1		1 0 2	0 1		1 0 2	0 1	
Volume Module:												
Base Vol:	271	404	169	122	559	45	80	1192	464	179	493	101
Growth Adj:	1.07	1.07	1.07	1.07	1.07	1.07	1.07	1.07	1.07	1.07	1.07	1.07
Initial Bse:	291	433	181	131	599	48	86	1278	497	192	528	108
Added Vol:	11	47	93	0	31	0	0	20	4	74	19	0
Committed P:	0	0	0	0	0	0	0	0	0	0	0	0
Initial Fut:	302	480	274	131	630	48	86	1298	501	266	547	108
User Adj:	1.00	1.00	1.00	1.00	1.00	1.00	1.00	1.00	1.00	1.00	1.00	1.00
PHF Adj:	1.00	1.00	1.00	1.00	1.00	1.00	1.00	1.00	1.00	1.00	1.00	1.00
PHF Volume:	302	480	274	131	630	48	86	1298	501	266	547	108
Reduct Vol:	0	0	0	0	0	0	0	0	0	0	0	0
Reduced Vol:	302	480	274	131	630	48	86	1298	501	266	547	108
PCE Adj:	1.00	1.00	1.00	1.00	1.00	1.00	1.00	1.00	1.00	1.00	1.00	1.00
MLF Adj:	1.00	1.00	1.00	1.00	1.00	1.00	1.00	1.00	1.00	1.00	1.00	1.00
FinalVolume:	302	480	274	131	630	48	86	1298	501	266	547	108
OvlAdjVol:									351			
Saturation Flow Module:												
Sat/Lane:	1600	1600	1600	1600	1600	1600	1600	1600	1600	1600	1600	1600
Adjustment:	1.00	1.00	1.00	1.00	1.00	1.00	1.00	1.00	1.00	1.00	1.00	1.00
Lanes:	2.00	2.00	1.00	1.00	2.00	1.00	1.00	2.00	1.00	1.00	2.00	1.00
Final Sat.:	3200	3200	1600	1600	3200	1600	1600	3200	1600	1600	3200	1600
Capacity Analysis Module:												
Vol/Sat:	0.09	0.15	0.17	0.08	0.20	0.03	0.05	0.41	0.31	0.17	0.17	0.07
OvlAdjV/S:									0.22			
Crit Moves:	****				****			****		****		

Newport Banning Ranch
Year 2016 Cumulative Conditions with Project
AM Peak Hour

Level Of Service Computation Report
ICU 1(Loss as Cycle Length %) Method (Future Volume Alternative)

Intersection #23 Pomona Ave/Victoria St

Cycle (sec): 100 Critical Vol./Cap.(X): 0.711
Loss Time (sec): 0 (Y+R=4.0 sec) Average Delay (sec/veh): xxxxxx
Optimal Cycle: 50 Level Of Service: C

Street Name:	Pomona Avenue						Victoria Street					
Approach:	North Bound			South Bound			East Bound			West Bound		
Movement:	L - T - R			L - T - R			L - T - R			L - T - R		
Control:	Permitted			Permitted			Permitted			Permitted		
Rights:	Include			Include			Include			Include		
Min. Green:	0	0	0	0	0	0	0	0	0	0	0	0
Lanes:	1 0 0 1 0			1 0 0 1 0			1 0 2 0 1			1 0 2 0 1		
Volume Module:												
Base Vol:	32	89	77	10	110	14	15	1486	52	86	690	18
Growth Adj:	1.07	1.07	1.07	1.07	1.07	1.07	1.07	1.07	1.07	1.07	1.07	1.07
Initial Bse:	34	95	83	11	118	15	16	1593	56	92	740	19
Added Vol:	1	0	3	0	0	0	0	113	0	0	92	0
Committed P:	0	0	0	0	0	0	0	0	0	0	0	0
Initial Fut:	35	95	86	11	118	15	16	1706	56	92	832	19
User Adj:	1.00	1.00	1.00	1.00	1.00	1.00	1.00	1.00	1.00	1.00	1.00	1.00
PHF Adj:	1.00	1.00	1.00	1.00	1.00	1.00	1.00	1.00	1.00	1.00	1.00	1.00
PHF Volume:	35	95	86	11	118	15	16	1706	56	92	832	19
Reduct Vol:	0	0	0	0	0	0	0	0	0	0	0	0
Reduced Vol:	35	95	86	11	118	15	16	1706	56	92	832	19
PCE Adj:	1.00	1.00	1.00	1.00	1.00	1.00	1.00	1.00	1.00	1.00	1.00	1.00
MLF Adj:	1.00	1.00	1.00	1.00	1.00	1.00	1.00	1.00	1.00	1.00	1.00	1.00
FinalVolume:	35	95	86	11	118	15	16	1706	56	92	832	19
Saturation Flow Module:												
Sat/Lane:	1600	1600	1600	1600	1600	1600	1600	1600	1600	1600	1600	1600
Adjustment:	1.00	1.00	1.00	1.00	1.00	1.00	1.00	1.00	1.00	1.00	1.00	1.00
Lanes:	1.00	0.53	0.47	1.00	0.89	0.11	1.00	2.00	1.00	1.00	2.00	1.00
Final Sat.:	1600	844	756	1600	1419	181	1600	3200	1600	1600	3200	1600
Capacity Analysis Module:												
Vol/Sat:	0.02	0.11	0.11	0.01	0.08	0.08	0.01	0.53	0.03	0.06	0.26	0.01
Crit Moves:		****		****				****		****		

Newport Banning Ranch
Year 2016 Cumulative Conditions with Project
AM Peak Hour

Level Of Service Computation Report
ICU 1(Loss as Cycle Length %) Method (Future Volume Alternative)

Intersection #24 Harbor Blvd/Victoria St

Cycle (sec):	100	Critical Vol./Cap.(X):	0.796
Loss Time (sec):	0 (Y+R=4.0 sec)	Average Delay (sec/veh):	xxxxxx
Optimal Cycle:	112	Level Of Service:	C

Street Name:	Harbor Boulevard						Victoria Street					
Approach:	North Bound			South Bound			East Bound			West Bound		
Movement:	L - T - R			L - T - R			L - T - R			L - T - R		
Control:	Protected			Protected			Protected			Protected		
Rights:	Include			Ovl			Include			Include		
Min. Green:	0	0	0	0	0	0	0	0	0	0	0	0
Lanes:	1 0 3 0 1			1 0 3 0 1			2 0 1 1 0			2 0 2 0 1		
Volume Module:												
Base Vol:	60	615	90	119	933	166	248	1272	89	135	623	109
Growth Adj:	1.07	1.07	1.07	1.07	1.07	1.07	1.07	1.07	1.07	1.07	1.07	1.07
Initial Bse:	64	659	96	128	1000	178	266	1364	95	145	668	117
Added Vol:	5	106	27	2	49	9	18	97	1	8	78	5
Committed P:	0	0	0	0	0	0	0	0	0	0	0	0
Initial Fut:	69	765	123	130	1049	187	284	1461	96	153	746	122
User Adj:	1.00	1.00	1.00	1.00	1.00	1.00	1.00	1.00	1.00	1.00	1.00	1.00
PHF Adj:	1.00	1.00	1.00	1.00	1.00	1.00	1.00	1.00	1.00	1.00	1.00	1.00
PHF Volume:	69	765	123	130	1049	187	284	1461	96	153	746	122
Reduct Vol:	0	0	0	0	0	0	0	0	0	0	0	0
Reduced Vol:	69	765	123	130	1049	187	284	1461	96	153	746	122
PCE Adj:	1.00	1.00	1.00	1.00	1.00	1.00	1.00	1.00	1.00	1.00	1.00	1.00
MLF Adj:	1.00	1.00	1.00	1.00	1.00	1.00	1.00	1.00	1.00	1.00	1.00	1.00
FinalVolume:	69	765	123	130	1049	187	284	1461	96	153	746	122
OvlAdjVol:						45						
Saturation Flow Module:												
Sat/Lane:	1600	1600	1600	1600	1600	1600	1600	1600	1600	1600	1600	1600
Adjustment:	1.00	1.00	1.00	1.00	1.00	1.00	1.00	1.00	1.00	1.00	1.00	1.00
Lanes:	1.00	3.00	1.00	1.00	3.00	1.00	2.00	1.88	0.12	2.00	2.00	1.00
Final Sat.:	1600	4800	1600	1600	4800	1600	3200	3002	198	3200	3200	1600
Capacity Analysis Module:												
Vol/Sat:	0.04	0.16	0.08	0.08	0.22	0.12	0.09	0.49	0.49	0.05	0.23	0.08
OvlAdjV/S:						0.03						
Crit Moves:	****				****			****		****		

Newport Banning Ranch
Year 2016 Cumulative Conditions with Project
AM Peak Hour

Level Of Service Computation Report
ICU 1(Loss as Cycle Length %) Method (Future Volume Alternative)

Intersection #25 Newport Blvd/Victoria St [Ramp]

Cycle (sec):	120	Critical Vol./Cap.(X):	0.621
Loss Time (sec):	0 (Y+R=4.0 sec)	Average Delay (sec/veh):	xxxxxx
Optimal Cycle:	49	Level Of Service:	B

Street Name:	Newport Boulevard									Victoria Street								
Approach:	North Bound						South Bound						East Bound						West Bound					
Movement:	L	-	T	-	R		L	-	T	-	R		L	-	T	-	R		L	-	T	-	R	
Control:	Permitted						Permitted						Protected						Protected					
Rights:	Include						Ignore						Include						Include					
Min. Green:	0	0	0				0	0	0				0	0	0				0	0	0			
Lanes:	0	0	0	0	0		1	1	2	0	1		0	0	2	1	0		1	0	1	0	0	
Volume Module:																								
Base Vol:	0	0	0				304	706	749				0	1629	30				77	279	0			
Growth Adj:	1.07	1.07	1.07				1.07	1.07	1.07				1.07	1.07	1.07				1.07	1.07	1.07			
Initial Bse:	0	0	0				326	757	803				0	1746	32				83	299	0			
Added Vol:	0	0	0				14	0	88				0	133	0				0	0	0			
Committed P:	0	0	0				0	0	0				0	0	0				0	0	0			
Initial Fut:	0	0	0				340	757	891				0	1879	32				83	299	0			
User Adj:	1.00	1.00	1.00				1.00	1.00	0.00				1.00	1.00	1.00				1.00	1.00	1.00			
PHF Adj:	1.00	1.00	1.00				1.00	1.00	0.00				1.00	1.00	1.00				1.00	1.00	1.00			
PHF Volume:	0	0	0				340	757	0				0	1879	32				83	299	0			
Reduct Vol:	0	0	0				0	0	0				0	0	0				0	0	0			
Reduced Vol:	0	0	0				340	757	0				0	1879	32				83	299	0			
PCE Adj:	1.00	1.00	1.00				1.00	1.00	0.00				1.00	1.00	1.00				1.00	1.00	1.00			
MLF Adj:	1.00	1.00	1.00				1.00	1.00	0.00				1.00	1.00	1.00				1.00	1.00	1.00			
FinalVolume:	0	0	0				340	757	0				0	1879	32				83	299	0			
Saturation Flow Module:																								
Sat/Lane:	1600	1600	1600				1600	1600	1600				1600	1600	1600				1600	1600	1600			
Adjustment:	1.00	1.00	1.00				1.00	1.00	1.00				1.00	1.00	1.00				1.00	1.00	1.00			
Lanes:	0.00	0.00	0.00				1.24	2.76	1.00				0.00	2.95	0.05				1.00	1.00	0.00			
Final Sat.:	0	0	0				1983	4417	1600				0	4719	81				1600	1600	0			
Capacity Analysis Module:																								
Vol/Sat:	0.00	0.00	0.00				0.17	0.17	0.00				0.00	0.40	0.40				0.05	0.19	0.00			
Crit Moves:							****							****					****					

Newport Banning Ranch
Year 2016 Cumulative Conditions with Project
AM Peak Hour

Level Of Service Computation Report
ICU 1(Loss as Cycle Length %) Method (Future Volume Alternative)

Intersection #26 Newport Blvd /Victoria St (22nd St) [Ramp]

Cycle (sec):	120	Critical Vol./Cap.(X):	1.104
Loss Time (sec):	0 (Y+R=4.0 sec)	Average Delay (sec/veh):	xxxxxx
Optimal Cycle:	180	Level Of Service:	F

Street Name:	Newport Boulevard						Victoria Street (22nd Street)					
Approach:	North Bound			South Bound			East Bound			West Bound		
Movement:	L - T - R			L - T - R			L - T - R			L - T - R		
Control:	Permitted			Permitted			Protected			Protected		
Rights:	Include			Include			Include			Include		
Min. Green:	0	0	0	0	0	0	0	0	0	0	0	0
Lanes:	0 1 2	0 1		0 0	0 0		2 0	2 0	0	0 0	1 0	1
Volume Module:												
Base Vol:	87	1212	32	0	0	0	1587	316	0	0	266	316
Growth Adj:	1.07	1.07	1.07	1.07	1.07	1.07	1.07	1.07	1.07	1.07	1.07	1.07
Initial Bse:	93	1299	34	0	0	0	1701	339	0	0	285	339
Added Vol:	0	0	0	0	0	0	133	14	0	0	0	47
Committed P:	0	0	0	0	0	0	0	0	0	0	0	0
Initial Fut:	93	1299	34	0	0	0	1834	353	0	0	285	386
User Adj:	1.00	1.00	1.00	1.00	1.00	1.00	1.00	1.00	1.00	1.00	1.00	1.00
PHF Adj:	1.00	1.00	1.00	1.00	1.00	1.00	1.00	1.00	1.00	1.00	1.00	1.00
PHF Volume:	93	1299	34	0	0	0	1834	353	0	0	285	386
Reduct Vol:	0	0	0	0	0	0	0	0	0	0	0	0
Reduced Vol:	93	1299	34	0	0	0	1834	353	0	0	285	386
PCE Adj:	1.00	1.00	1.00	1.00	1.00	1.00	1.00	1.00	1.00	1.00	1.00	1.00
MLF Adj:	1.00	1.00	1.00	1.00	1.00	1.00	1.00	1.00	1.00	1.00	1.00	1.00
FinalVolume:	93	1299	34	0	0	0	1834	353	0	0	285	386
Saturation Flow Module:												
Sat/Lane:	1600	1600	1600	1600	1600	1600	1600	1600	1600	1600	1600	1600
Adjustment:	1.00	1.00	1.00	1.00	1.00	1.00	1.00	1.00	1.00	1.00	1.00	1.00
Lanes:	0.20	2.80	1.00	0.00	0.00	0.00	2.00	2.00	0.00	0.00	1.00	1.00
Final Sat.:	321	4479	1600	0	0	0	3200	3200	0	0	1600	1600
Capacity Analysis Module:												
Vol/Sat:	0.06	0.29	0.02	0.00	0.00	0.00	0.57	0.11	0.00	0.00	0.18	0.24
Crit Moves:		****					****					****

Newport Banning Ranch
Year 2016 Cumulative Conditions with Project
AM Peak Hour

Level Of Service Computation Report
2000 HCM 4-Way Stop Method (Future Volume Alternative)

Intersection #27 Whittier Ave/19th St

Cycle (sec):	100	Critical Vol./Cap.(X):	0.403
Loss Time (sec):	0 (Y+R=4.0 sec)	Average Delay (sec/veh):	11.1
Optimal Cycle:	0	Level Of Service:	B

Street Name:	Whittier Avenue						19th St					
Approach:	North Bound			South Bound			East Bound			West Bound		
Movement:	L -	T -	R	L -	T -	R	L -	T -	R	L -	T -	R
Control:	Stop Sign			Stop Sign			Stop Sign			Stop Sign		
Rights:	Include			Include			Include			Include		
Min. Green:	0	0	0	0	0	0	0	0	0	0	0	0
Lanes:	0 0	1! 0	0	0 1	0 0	0	1 0	0 1	0	1 0	0 1	0
Volume Module:												
Base Vol:	5	6	258	10	6	0	1	123	7	210	29	10
Growth Adj:	1.07	1.07	1.07	1.07	1.07	1.07	1.07	1.07	1.07	1.07	1.07	1.07
Initial Bse:	5	6	277	11	6	0	1	132	8	225	31	11
Added Vol:	0	0	0	0	0	0	0	97	0	0	29	0
Committed P:	0	0	0	0	0	0	0	0	0	0	0	0
Initial Fut:	5	6	277	11	6	0	1	229	8	225	60	11
User Adj:	1.00	1.00	1.00	1.00	1.00	1.00	1.00	1.00	1.00	1.00	1.00	1.00
PHF Adj:	1.00	1.00	1.00	1.00	1.00	1.00	1.00	1.00	1.00	1.00	1.00	1.00
PHF Volume:	5	6	277	11	6	0	1	229	8	225	60	11
Reduct Vol:	0	0	0	0	0	0	0	0	0	0	0	0
Reduced Vol:	5	6	277	11	6	0	1	229	8	225	60	11
PCE Adj:	1.00	1.00	1.00	1.00	1.00	1.00	1.00	1.00	1.00	1.00	1.00	1.00
MLF Adj:	1.00	1.00	1.00	1.00	1.00	1.00	1.00	1.00	1.00	1.00	1.00	1.00
FinalVolume:	5	6	277	11	6	0	1	229	8	225	60	11
Saturation Flow Module:												
Adjustment:	1.00	1.00	1.00	1.00	1.00	1.00	1.00	1.00	1.00	1.00	1.00	1.00
Lanes:	0.02	0.02	0.96	0.62	0.38	0.00	1.00	0.97	0.03	1.00	0.85	0.15
Final Sat.:	13	16	686	344	206	0	567	600	20	579	543	97
Capacity Analysis Module:												
Vol/Sat:	0.40	0.40	0.40	0.03	0.03	xxxx	0.00	0.38	0.38	0.39	0.11	0.11
Crit Moves:	****				****			****		****		
Delay/Veh:	10.6	10.6	10.6	9.0	9.0	0.0	8.8	11.5	11.5	12.3	8.8	8.8
Delay Adj:	1.00	1.00	1.00	1.00	1.00	1.00	1.00	1.00	1.00	1.00	1.00	1.00
AdjDel/Veh:	10.6	10.6	10.6	9.0	9.0	0.0	8.8	11.5	11.5	12.3	8.8	8.8
LOS by Move:	B	B	B	A	A	*	A	B	B	B	A	A
ApproachDel:	10.6			9.0			11.5			11.5		
Delay Adj:	1.00			1.00			1.00			1.00		
ApprAdjDel:	10.6			9.0			11.5			11.5		
LOS by Appr:	B			A			B			B		
AllWayAvgQ:	0.6	0.6	0.6	0.0	0.0	0.0	0.0	0.5	0.5	0.6	0.1	0.1

Newport Banning Ranch
Year 2016 Cumulative Conditions with Project
AM Peak Hour

Note: Queue reported is the number of cars per lane.

Newport Banning Ranch
Year 2016 Cumulative Conditions with Project
AM Peak Hour

Level Of Service Computation Report
2000 HCM 4-Way Stop Method (Future Volume Alternative)

Intersection #28 Monrovia Ave/19th St

Cycle (sec):	100	Critical Vol./Cap.(X):	1.046
Loss Time (sec):	0 (Y+R=4.0 sec)	Average Delay (sec/veh):	39.2
Optimal Cycle:	0	Level Of Service:	E

Street Name:	Monrovia Avenue						19th Street					
Approach:	North Bound			South Bound			East Bound			West Bound		
Movement:	L -	T -	R	L -	T -	R	L -	T -	R	L -	T -	R
Control:	Stop Sign			Stop Sign			Stop Sign			Stop Sign		
Rights:	Include			Include			Include			Include		
Min. Green:	0	0	0	0	0	0	0	0	0	0	0	0
Lanes:	0 1	0 0	1	0 0	1! 0	0	1 0	1 0	1	1 0	1 0	1
Volume Module:												
Base Vol:	31	10	162	79	19	1	4	403	34	154	213	30
Growth Adj:	1.07	1.07	1.07	1.07	1.07	1.07	1.07	1.07	1.07	1.07	1.07	1.07
Initial Bse:	33	11	174	85	20	1	4	432	36	165	228	32
Added Vol:	0	11	9	0	15	0	0	97	0	10	29	0
Committed P:	0	0	0	0	0	0	0	0	0	0	0	0
Initial Fut:	33	22	183	85	35	1	4	529	36	175	257	32
User Adj:	1.00	1.00	1.00	1.00	1.00	1.00	1.00	1.00	1.00	1.00	1.00	1.00
PHF Adj:	1.00	1.00	1.00	1.00	1.00	1.00	1.00	1.00	1.00	1.00	1.00	1.00
PHF Volume:	33	22	183	85	35	1	4	529	36	175	257	32
Reduct Vol:	0	0	0	0	0	0	0	0	0	0	0	0
Reduced Vol:	33	22	183	85	35	1	4	529	36	175	257	32
PCE Adj:	1.00	1.00	1.00	1.00	1.00	1.00	1.00	1.00	1.00	1.00	1.00	1.00
MLF Adj:	1.00	1.00	1.00	1.00	1.00	1.00	1.00	1.00	1.00	1.00	1.00	1.00
FinalVolume:	33	22	183	85	35	1	4	529	36	175	257	32
Saturation Flow Module:												
Adjustment:	1.00	1.00	1.00	1.00	1.00	1.00	1.00	1.00	1.00	1.00	1.00	1.00
Lanes:	0.60	0.40	1.00	0.70	0.29	0.01	1.00	1.00	1.00	1.00	1.00	1.00
Final Sat.:	267	175	506	299	125	4	462	506	547	452	482	530
Capacity Analysis Module:												
Vol/Sat:	0.12	0.12	0.36	0.28	0.28	0.28	0.01	1.05	0.07	0.39	0.53	0.06
Crit Moves:			****	****				****			****	
Delay/Veh:	11.7	11.7	13.4	14.1	14.1	14.1	10.4	78.9	9.6	15.4	18.0	9.8
Delay Adj:	1.00	1.00	1.00	1.00	1.00	1.00	1.00	1.00	1.00	1.00	1.00	1.00
AdjDel/Veh:	11.7	11.7	13.4	14.1	14.1	14.1	10.4	78.9	9.6	15.4	18.0	9.8
LOS by Move:	B	B	B	B	B	B	B	F	A	C	C	A
ApproachDel:	13.0			14.1			73.9			16.5		
Delay Adj:	1.00			1.00			1.00			1.00		
ApprAdjDel:	13.0			14.1			73.9			16.5		
LOS by Appr:	B			B			F			C		
AllWayAvgQ:	0.1	0.1	0.5	0.4	0.4	0.4	0.0	9.7	0.1	0.6	1.1	0.1

Newport Banning Ranch
Year 2016 Cumulative Conditions with Project
AM Peak Hour

Note: Queue reported is the number of cars per lane.
****

Newport Banning Ranch
Year 2016 Cumulative Conditions with Project
AM Peak Hour

Level Of Service Computation Report
ICU 1(Loss as Cycle Length %) Method (Future Volume Alternative)

Intersection #29 Placentia Ave/19th St

Cycle (sec):	100	Critical Vol./Cap.(X):	0.577
Loss Time (sec):	0 (Y+R=4.0 sec)	Average Delay (sec/veh):	xxxxxx
Optimal Cycle:	54	Level Of Service:	A

Street Name:	Placentia Avenue						19th Street					
Approach:	North Bound			South Bound			East Bound			West Bound		
Movement:	L - T - R			L - T - R			L - T - R			L - T - R		
Control:	Protected			Protected			Protected			Protected		
Rights:	Include			Include			Include			Include		
Min. Green:	0	0	0	0	0	0	0	0	0	0	0	0
Lanes:	1 0 2 0 1			1 0 1 1 0			2 0 1 1 0			2 0 2 0 1		
Volume Module:												
Base Vol:	31	412	217	140	495	115	201	582	33	219	328	165
Growth Adj:	1.07	1.07	1.07	1.07	1.07	1.07	1.07	1.07	1.07	1.07	1.07	1.07
Initial Bse:	33	442	233	150	531	123	215	624	35	235	352	177
Added Vol:	-21	94	7	8	123	1	2	104	-8	3	39	0
Committed P:	0	1	0	0	0	0	0	0	0	0	0	0
Initial Fut:	12	537	240	158	654	124	217	728	27	238	391	177
User Adj:	1.00	1.00	1.00	1.00	1.00	1.00	1.00	1.00	1.00	1.00	1.00	1.00
PHF Adj:	1.00	1.00	1.00	1.00	1.00	1.00	1.00	1.00	1.00	1.00	1.00	1.00
PHF Volume:	12	537	240	158	654	124	217	728	27	238	391	177
Reduct Vol:	0	0	0	0	0	0	0	0	0	0	0	0
Reduced Vol:	12	537	240	158	654	124	217	728	27	238	391	177
PCE Adj:	1.00	1.00	1.00	1.00	1.00	1.00	1.00	1.00	1.00	1.00	1.00	1.00
MLF Adj:	1.00	1.00	1.00	1.00	1.00	1.00	1.00	1.00	1.00	1.00	1.00	1.00
FinalVolume:	12	537	240	158	654	124	217	728	27	238	391	177
Saturation Flow Module:												
Sat/Lane:	1600	1600	1600	1600	1600	1600	1600	1600	1600	1600	1600	1600
Adjustment:	1.00	1.00	1.00	1.00	1.00	1.00	1.00	1.00	1.00	1.00	1.00	1.00
Lanes:	1.00	2.00	1.00	1.00	1.68	0.32	2.00	1.93	0.07	2.00	2.00	1.00
Final Sat.:	1600	3200	1600	1600	2689	511	3200	3084	116	3200	3200	1600
Capacity Analysis Module:												
Vol/Sat:	0.01	0.17	0.15	0.10	0.24	0.24	0.07	0.24	0.24	0.07	0.12	0.11
Crit Moves:		****		****				****		****		

Newport Banning Ranch
Year 2016 Cumulative Conditions with Project
AM Peak Hour

Level Of Service Computation Report
ICU 1(Loss as Cycle Length %) Method (Future Volume Alternative)

Intersection #30 Pomona Ave/19th St

Cycle (sec):	100	Critical Vol./Cap.(X):	0.540
Loss Time (sec):	0 (Y+R=4.0 sec)	Average Delay (sec/veh):	xxxxxx
Optimal Cycle:	50	Level Of Service:	A

Street Name:	Pomona Avenue						19th Street					
Approach:	North Bound			South Bound			East Bound			West Bound		
Movement:	L - T - R			L - T - R			L - T - R			L - T - R		
Control:	Protected			Protected			Prot+Permit			Prot+Permit		
Rights:	Include			Include			Include			Include		
Min. Green:	0	0	0	0	0	0	0	0	0	0	0	0
Lanes:	1 0 0	1 0		1 0 0	1 0		1 0 1	1 0		1 0 1	1 0	
Volume Module:												
Base Vol:	36	75	71	52	94	36	38	847	39	104	615	26
Growth Adj:	1.07	1.07	1.07	1.07	1.07	1.07	1.07	1.07	1.07	1.07	1.07	1.07
Initial Bse:	39	80	76	56	101	39	41	908	42	111	659	28
Added Vol:	0	3	3	0	0	0	0	119	0	0	41	1
Committed P:	0	0	0	0	0	0	0	0	0	0	0	0
Initial Fut:	39	83	79	56	101	39	41	1027	42	111	700	29
User Adj:	1.00	1.00	1.00	1.00	1.00	1.00	1.00	1.00	1.00	1.00	1.00	1.00
PHF Adj:	1.00	1.00	1.00	1.00	1.00	1.00	1.00	1.00	1.00	1.00	1.00	1.00
PHF Volume:	39	83	79	56	101	39	41	1027	42	111	700	29
Reduct Vol:	0	0	0	0	0	0	0	0	0	0	0	0
Reduced Vol:	39	83	79	56	101	39	41	1027	42	111	700	29
PCE Adj:	1.00	1.00	1.00	1.00	1.00	1.00	1.00	1.00	1.00	1.00	1.00	1.00
MLF Adj:	1.00	1.00	1.00	1.00	1.00	1.00	1.00	1.00	1.00	1.00	1.00	1.00
FinalVolume:	39	83	79	56	101	39	41	1027	42	111	700	29
Saturation Flow Module:												
Sat/Lane:	1600	1600	1600	1600	1600	1600	1600	1600	1600	1600	1600	1600
Adjustment:	1.00	1.00	1.00	1.00	1.00	1.00	1.00	1.00	1.00	1.00	1.00	1.00
Lanes:	1.00	0.51	0.49	1.00	0.72	0.28	1.00	1.92	0.08	1.00	1.92	0.08
Final Sat.:	1600	821	779	1600	1157	443	1600	3075	125	1600	3073	127
Capacity Analysis Module:												
Vol/Sat:	0.02	0.10	0.10	0.03	0.09	0.09	0.03	0.33	0.33	0.07	0.23	0.23
Crit Moves:		****		****				****		****		

Newport Banning Ranch
Year 2016 Cumulative Conditions with Project
AM Peak Hour

Level Of Service Computation Report
ICU 1(Loss as Cycle Length %) Method (Future Volume Alternative)

Intersection #31 Anaheim Ave/19th St

Cycle (sec):	100	Critical Vol./Cap.(X):	0.541
Loss Time (sec):	0 (Y+R=4.0 sec)	Average Delay (sec/veh):	xxxxxx
Optimal Cycle:	40	Level Of Service:	A

Street Name:	Anaheim Avenue						19th Street					
Approach:	North Bound			South Bound			East Bound			West Bound		
Movement:	L - T - R			L - T - R			L - T - R			L - T - R		
Control:	Permitted			Permitted			Prot+Permit			Prot+Permit		
Rights:	Include			Include			Include			Include		
Min. Green:	0	0	0	0	0	0	0	0	0	0	0	0
Lanes:	1 0 0	1 0		0 1 0	1 0		0 1 0	1 1 0		1 0 2	0 1	
Volume Module:												
Base Vol:	27	26	88	41	41	23	24	961	18	103	724	33
Growth Adj:	1.07	1.07	1.07	1.07	1.07	1.07	1.07	1.07	1.07	1.07	1.07	1.07
Initial Bse:	29	28	94	44	44	25	26	1030	19	110	776	35
Added Vol:	0	0	0	0	0	0	0	127	0	0	43	0
Committed P:	0	0	0	0	0	0	0	0	0	0	0	0
Initial Fut:	29	28	94	44	44	25	26	1157	19	110	819	35
User Adj:	1.00	1.00	1.00	1.00	1.00	1.00	1.00	1.00	1.00	1.00	1.00	1.00
PHF Adj:	1.00	1.00	1.00	1.00	1.00	1.00	1.00	1.00	1.00	1.00	1.00	1.00
PHF Volume:	29	28	94	44	44	25	26	1157	19	110	819	35
Reduct Vol:	0	0	0	0	0	0	0	0	0	0	0	0
Reduced Vol:	29	28	94	44	44	25	26	1157	19	110	819	35
PCE Adj:	1.00	1.00	1.00	1.00	1.00	1.00	1.00	1.00	1.00	1.00	1.00	1.00
MLF Adj:	1.00	1.00	1.00	1.00	1.00	1.00	1.00	1.00	1.00	1.00	1.00	1.00
FinalVolume:	29	28	94	44	44	25	26	1157	19	110	819	35
Saturation Flow Module:												
Sat/Lane:	1600	1600	1600	1600	1600	1600	1600	1600	1600	1600	1600	1600
Adjustment:	1.00	1.00	1.00	1.00	1.00	1.00	1.00	1.00	1.00	1.00	1.00	1.00
Lanes:	1.00	0.23	0.77	1.00	0.64	0.36	1.00	1.97	0.03	1.00	2.00	1.00
Final Sat.:	1600	365	1235	1600	1025	575	1600	3148	52	1600	3200	1600
Capacity Analysis Module:												
Vol/Sat:	0.02	0.08	0.08	0.03	0.04	0.04	0.02	0.37	0.37	0.07	0.26	0.02
Crit Moves:		****		****				****		****		

Newport Banning Ranch
Year 2016 Cumulative Conditions with Project
AM Peak Hour

Level Of Service Computation Report
ICU 1(Loss as Cycle Length %) Method (Future Volume Alternative)

Intersection #32 Park Ave/19th St

Cycle (sec):	100	Critical Vol./Cap.(X):	0.514
Loss Time (sec):	0 (Y+R=4.0 sec)	Average Delay (sec/veh):	xxxxxx
Optimal Cycle:	38	Level Of Service:	A

Street Name:	Park Avenue						19th St					
Approach:	North Bound			South Bound			East Bound			West Bound		
Movement:	L - T - R			L - T - R			L - T - R			L - T - R		
Control:	Permitted			Permitted			Prot+Permit			Prot+Permit		
Rights:	Include			Include			Include			Include		
Min. Green:	0	0	0	0	0	0	0	0	0	0	0	0
Lanes:	2 0 0 0 1			0 0 0 0 0			1 0 2 0 1			1 0 3 0 0		
Volume Module:												
Base Vol:	43	0	108	0	0	0	6	1012	60	94	800	0
Growth Adj:	1.07	1.07	1.07	1.07	1.07	1.07	1.07	1.07	1.07	1.07	1.07	1.07
Initial Bse:	46	0	116	0	0	0	6	1085	64	101	858	0
Added Vol:	0	0	0	0	0	0	0	127	0	0	42	0
Committed P:	0	0	0	0	0	0	0	0	0	0	0	0
Initial Fut:	46	0	116	0	0	0	6	1212	64	101	900	0
User Adj:	1.00	1.00	1.00	1.00	1.00	1.00	1.00	1.00	1.00	1.00	1.00	1.00
PHF Adj:	1.00	1.00	1.00	1.00	1.00	1.00	1.00	1.00	1.00	1.00	1.00	1.00
PHF Volume:	46	0	116	0	0	0	6	1212	64	101	900	0
Reduct Vol:	0	0	0	0	0	0	0	0	0	0	0	0
Reduced Vol:	46	0	116	0	0	0	6	1212	64	101	900	0
PCE Adj:	1.00	1.00	1.00	1.00	1.00	1.00	1.00	1.00	1.00	1.00	1.00	1.00
MLF Adj:	1.00	1.00	1.00	1.00	1.00	1.00	1.00	1.00	1.00	1.00	1.00	1.00
FinalVolume:	46	0	116	0	0	0	6	1212	64	101	900	0
Saturation Flow Module:												
Sat/Lane:	1600	1600	1600	1600	1600	1600	1600	1600	1600	1600	1600	1600
Adjustment:	1.00	1.00	1.00	1.00	1.00	1.00	1.00	1.00	1.00	1.00	1.00	1.00
Lanes:	2.00	0.00	1.00	0.00	0.00	0.00	1.00	2.00	1.00	1.00	3.00	0.00
Final Sat.:	3200	0	1600	0	0	0	1600	3200	1600	1600	4800	0
Capacity Analysis Module:												
Vol/Sat:	0.01	0.00	0.07	0.00	0.00	0.00	0.00	0.38	0.04	0.06	0.19	0.00
Crit Moves:			****					****		****		

Newport Banning Ranch
Year 2016 Cumulative Conditions with Project
AM Peak Hour

Level Of Service Computation Report
ICU 1(Loss as Cycle Length %) Method (Future Volume Alternative)

Intersection #33 Harbor Blvd/19th St

Cycle (sec):	100	Critical Vol./Cap.(X):	0.458
Loss Time (sec):	0 (Y+R=4.0 sec)	Average Delay (sec/veh):	xxxxxx
Optimal Cycle:	42	Level Of Service:	A

Street Name:	Harbor Boulevard						19th Street					
Approach:	North Bound			South Bound			East Bound			West Bound		
Movement:	L - T - R			L - T - R			L - T - R			L - T - R		
Control:	Protected			Protected			Protected			Protected		
Rights:	Include			Include			Include			Include		
Min. Green:	0	0	0	0	0	0	0	0	0	0	0	0
Lanes:	1 0 2	1 0		1 0 2	0 1		2 0 2	1 0		1 0 3	0 1	
Volume Module:												
Base Vol:	18	287	14	141	425	260	216	928	37	36	630	161
Growth Adj:	1.07	1.07	1.07	1.07	1.07	1.07	1.07	1.07	1.07	1.07	1.07	1.07
Initial Bse:	19	308	15	151	456	279	232	995	40	39	675	173
Added Vol:	1	47	0	5	31	22	53	64	10	0	18	1
Committed P:	3	5	0	0	6	0	0	0	2	0	0	0
Initial Fut:	23	360	15	156	493	301	285	1059	52	39	693	174
User Adj:	1.00	1.00	1.00	1.00	1.00	1.00	1.00	1.00	1.00	1.00	1.00	1.00
PHF Adj:	1.00	1.00	1.00	1.00	1.00	1.00	1.00	1.00	1.00	1.00	1.00	1.00
PHF Volume:	23	360	15	156	493	301	285	1059	52	39	693	174
Reduct Vol:	0	0	0	0	0	0	0	0	0	0	0	0
Reduced Vol:	23	360	15	156	493	301	285	1059	52	39	693	174
PCE Adj:	1.00	1.00	1.00	1.00	1.00	1.00	1.00	1.00	1.00	1.00	1.00	1.00
MLF Adj:	1.00	1.00	1.00	1.00	1.00	1.00	1.00	1.00	1.00	1.00	1.00	1.00
FinalVolume:	23	360	15	156	493	301	285	1059	52	39	693	174
Saturation Flow Module:												
Sat/Lane:	1600	1600	1600	1600	1600	1600	1600	1600	1600	1600	1600	1600
Adjustment:	1.00	1.00	1.00	1.00	1.00	1.00	1.00	1.00	1.00	1.00	1.00	1.00
Lanes:	1.00	2.88	0.12	1.00	2.00	1.00	2.00	2.86	0.14	1.00	3.00	1.00
Final Sat.:	1600	4608	192	1600	3200	1600	3200	4577	223	1600	4800	1600
Capacity Analysis Module:												
Vol/Sat:	0.01	0.08	0.08	0.10	0.15	0.19	0.09	0.23	0.23	0.02	0.14	0.11
Crit Moves:	****					****		****		****		

Newport Banning Ranch
Year 2016 Cumulative Conditions with Project
AM Peak Hour

Level Of Service Computation Report
ICU 1(Loss as Cycle Length %) Method (Future Volume Alternative)

Intersection #34 Newport Blvd/19th St

Cycle (sec):	120	Critical Vol./Cap.(X):	0.909
Loss Time (sec):	0 (Y+R=4.0 sec)	Average Delay (sec/veh):	xxxxxx
Optimal Cycle:	180	Level Of Service:	E

Street Name:	Newport Boulevard									19th Street								
Approach:	North Bound			South Bound			East Bound			West Bound		
Movement:	L	- T	- R	L	- T	- R	L	- T	- R	L	- T	- R
Control:	Protected			Protected			Split Phase			Split Phase		
Rights:	Include			Include			Include			Include		
Min. Green:	0	0	0	0	0	0	0	0	0	0	0	0
Lanes:	1 0	3 1	0	1 0	3 1	1	2 1	1 0	1	1 0	2 1	1
Volume Module:												
Base Vol:	31	2709	9	181	2440	486	886	183	14	21	162	237
Growth Adj:	1.07	1.07	1.07	1.07	1.07	1.07	1.07	1.07	1.07	1.07	1.07	1.07
Initial Bse:	33	2904	10	194	2616	521	950	196	15	23	174	254
Added Vol:	0	257	0	0	111	18	63	6	0	10	1	0
Committed P:	0	12	1	0	9	0	0	0	2	0	0	0
Initial Fut:	33	3173	11	194	2736	539	1013	202	17	33	175	254
User Adj:	1.00	1.00	1.00	1.00	1.00	1.00	1.00	1.00	1.00	1.00	1.00	1.00
PHF Adj:	1.00	1.00	1.00	1.00	1.00	1.00	1.00	1.00	1.00	1.00	1.00	1.00
PHF Volume:	33	3173	11	194	2736	539	1013	202	17	33	175	254
Reduct Vol:	0	0	0	0	0	0	0	0	0	0	0	0
Reduced Vol:	33	3173	11	194	2736	539	1013	202	17	33	175	254
PCE Adj:	1.00	1.00	1.00	1.00	1.00	1.00	1.00	1.00	1.00	1.00	1.00	1.00
MLF Adj:	1.00	1.00	1.00	1.00	1.00	1.00	1.00	1.00	1.00	1.00	1.00	1.00
FinalVolume:	33	3173	11	194	2736	539	1013	202	17	33	175	254
Saturation Flow Module:												
Sat/Lane:	1600	1600	1600	1600	1600	1600	1600	1600	1600	1600	1600	1600
Adjustment:	1.00	1.00	1.00	1.00	1.00	1.00	1.00	1.00	1.00	1.00	1.00	1.00
Lanes:	1.00	3.99	0.01	1.00	4.00	1.00	3.00	1.00	1.00	1.00	2.00	2.00
Final Sat.:	1600	6379	21	1600	6400	1600	4800	1600	1600	1600	3200	3200
Capacity Analysis Module:												
Vol/Sat:	0.02	0.50	0.50	0.12	0.43	0.34	0.21	0.13	0.01	0.02	0.05	0.08
Crit Moves:		****		****			****					****

Newport Banning Ranch
Year 2016 Cumulative Conditions with Project
AM Peak Hour

Level Of Service Computation Report
ICU 1(Loss as Cycle Length %) Method (Future Volume Alternative)

Intersection #35 Newport Blvd/Broadway

Cycle (sec):	120	Critical Vol./Cap.(X):	0.645
Loss Time (sec):	0 (Y+R=4.0 sec)	Average Delay (sec/veh):	xxxxxx
Optimal Cycle:	52	Level Of Service:	B

Street Name:	Newport Boulevard									Broadway								
Approach:	North Bound			South Bound			East Bound			West Bound		
Movement:	L	- T	- R	L	- T	- R	L	- T	- R	L	- T	- R
Control:	Protected			Protected			Permitted			Permitted		
Rights:	Include			Include			Include			Include		
Min. Green:	0	0	0	0	0	0	0	0	0	0	0	0
Lanes:	1 0	3 1	0	1 0	3 0	1	0 1	0 0	1	1 0	0 1	0
Volume Module:												
Base Vol:	4	2678	8	60	2396	7	6	9	3	38	12	102
Growth Adj:	1.07	1.07	1.07	1.07	1.07	1.07	1.07	1.07	1.07	1.07	1.07	1.07
Initial Bse:	4	2871	9	64	2569	8	6	10	3	41	13	109
Added Vol:	2	257	0	0	111	10	0	0	2	0	0	0
Committed P:	0	14	1	0	12	0	0	0	0	0	0	0
Initial Fut:	6	3142	10	64	2692	18	6	10	5	41	13	109
User Adj:	1.00	1.00	1.00	1.00	1.00	1.00	1.00	1.00	1.00	1.00	1.00	1.00
PHF Adj:	1.00	1.00	1.00	1.00	1.00	1.00	1.00	1.00	1.00	1.00	1.00	1.00
PHF Volume:	6	3142	10	64	2692	18	6	10	5	41	13	109
Reduct Vol:	0	0	0	0	0	0	0	0	0	0	0	0
Reduced Vol:	6	3142	10	64	2692	18	6	10	5	41	13	109
PCE Adj:	1.00	1.00	1.00	1.00	1.00	1.00	1.00	1.00	1.00	1.00	1.00	1.00
MLF Adj:	1.00	1.00	1.00	1.00	1.00	1.00	1.00	1.00	1.00	1.00	1.00	1.00
FinalVolume:	6	3142	10	64	2692	18	6	10	5	41	13	109
Saturation Flow Module:												
Sat/Lane:	1600	1600	1600	1600	1600	1600	1600	1600	1600	1600	1600	1600
Adjustment:	1.00	1.00	1.00	1.00	1.00	1.00	1.00	1.00	1.00	1.00	1.00	1.00
Lanes:	1.00	3.99	0.01	1.00	3.00	1.00	0.40	0.60	1.00	1.00	0.11	0.89
Final Sat.:	1600	6381	19	1600	4800	1600	640	960	1600	1600	168	1432
Capacity Analysis Module:												
Vol/Sat:	0.00	0.49	0.49	0.04	0.56	0.01	0.00	0.01	0.00	0.03	0.08	0.08
Crit Moves:	****				****		****				****	

Newport Banning Ranch
Year 2016 Cumulative Conditions with Project
AM Peak Hour

Level Of Service Computation Report
ICU 1(Loss as Cycle Length %) Method (Future Volume Alternative)

Intersection #36 Newport Blvd/Harbor Blvd

Cycle (sec):	120	Critical Vol./Cap.(X):	0.783
Loss Time (sec):	0 (Y+R=4.0 sec)	Average Delay (sec/veh):	xxxxxx
Optimal Cycle:	105	Level Of Service:	C

Street Name:	Newport Boulevard						Harbor Boulevard					
Approach:	North Bound			South Bound			East Bound			West Bound		
Movement:	L - T - R			L - T - R			L - T - R			L - T - R		
Control:	Protected			Protected			Protected			Protected		
Rights:	Include			Include			Ovl			Include		
Min. Green:	0	0	0	0	0	0	0	0	0	0	0	0
Lanes:	2 0 4 0 0			0 0 2 1 0			1 0 0 0 2			0 0 0 0 0		
Volume Module:												
Base Vol:	317	2653	0	0	2559	49	26	0	486	0	0	0
Growth Adj:	1.07	1.07	1.07	1.07	1.07	1.07	1.07	1.07	1.07	1.07	1.07	1.07
Initial Bse:	340	2844	0	0	2743	53	28	0	521	0	0	0
Added Vol:	46	259	0	0	112	0	0	0	23	0	0	0
Committed P:	13	17	0	0	14	0	0	0	14	0	0	0
Initial Fut:	399	3120	0	0	2869	53	28	0	558	0	0	0
User Adj:	1.00	1.00	1.00	1.00	1.00	1.00	1.00	1.00	1.00	1.00	1.00	1.00
PHF Adj:	1.00	1.00	1.00	1.00	1.00	1.00	1.00	1.00	1.00	1.00	1.00	1.00
PHF Volume:	399	3120	0	0	2869	53	28	0	558	0	0	0
Reduct Vol:	0	0	0	0	0	0	0	0	0	0	0	0
Reduced Vol:	399	3120	0	0	2869	53	28	0	558	0	0	0
PCE Adj:	1.00	1.00	1.00	1.00	1.00	1.00	1.00	1.00	1.00	1.00	1.00	1.00
MLF Adj:	1.00	1.00	1.00	1.00	1.00	1.00	1.00	1.00	1.00	1.00	1.00	1.00
FinalVolume:	399	3120	0	0	2869	53	28	0	558	0	0	0
OvlAdjVol:									159			
Saturation Flow Module:												
Sat/Lane:	1600	1600	1600	1600	1600	1600	1600	1600	1600	1600	1600	1600
Adjustment:	1.00	1.00	1.00	1.00	1.00	1.00	1.00	1.00	1.00	1.00	1.00	1.00
Lanes:	2.00	4.00	0.00	0.00	2.95	0.05	1.00	0.00	2.00	0.00	0.00	0.00
Final Sat.:	3200	6400	0	0	4714	86	1600	0	3200	0	0	0
Capacity Analysis Module:												
Vol/Sat:	0.12	0.49	0.00	0.00	0.61	0.61	0.02	0.00	0.17	0.00	0.00	0.00
OvlAdjV/S:									0.05			
Crit Moves:	****				****				****			

Newport Banning Ranch
Year 2016 Cumulative Conditions with Project
AM Peak Hour

Level Of Service Computation Report
ICU 1(Loss as Cycle Length %) Method (Future Volume Alternative)

Intersection #37 Newport Blvd/18th St (Rochester St)

Cycle (sec):	120	Critical Vol./Cap.(X):	0.834
Loss Time (sec):	0 (Y+R=4.0 sec)	Average Delay (sec/veh):	xxxxxx
Optimal Cycle:	137	Level Of Service:	D

Street Name:	Newport Boulevard						18th Street (Rochester Street)					
Approach:	North Bound			South Bound			East Bound			West Bound		
Movement:	L - T - R			L - T - R			L - T - R			L - T - R		
Control:	Protected			Protected			Split Phase			Split Phase		
Rights:	Include			Include			Include			Include		
Min. Green:	0	0	0	0	0	0	0	0	0	0	0	0
Lanes:	1 0 3	1 0		1 0 3	0 1		2 0 1	0 1		1 0 0	1 0	
Volume Module:												
Base Vol:	64	2852	7	85	2743	165	179	81	26	7	68	30
Growth Adj:	1.07	1.07	1.07	1.07	1.07	1.07	1.07	1.07	1.07	1.07	1.07	1.07
Initial Bse:	69	3057	8	91	2940	177	192	87	28	8	73	32
Added Vol:	0	247	0	0	113	22	57	0	0	0	0	0
Committed P:	6	35	0	0	35	0	0	0	15	0	0	0
Initial Fut:	75	3339	8	91	3088	199	249	87	43	8	73	32
User Adj:	1.00	1.00	1.00	1.00	1.00	1.00	1.00	1.00	1.00	1.00	1.00	1.00
PHF Adj:	1.00	1.00	1.00	1.00	1.00	1.00	1.00	1.00	1.00	1.00	1.00	1.00
PHF Volume:	75	3339	8	91	3088	199	249	87	43	8	73	32
Reduct Vol:	0	0	0	0	0	0	0	0	0	0	0	0
Reduced Vol:	75	3339	8	91	3088	199	249	87	43	8	73	32
PCE Adj:	1.00	1.00	1.00	1.00	1.00	1.00	1.00	1.00	1.00	1.00	1.00	1.00
MLF Adj:	1.00	1.00	1.00	1.00	1.00	1.00	1.00	1.00	1.00	1.00	1.00	1.00
FinalVolume:	75	3339	8	91	3088	199	249	87	43	8	73	32
Saturation Flow Module:												
Sat/Lane:	1600	1600	1600	1600	1600	1600	1600	1600	1600	1600	1600	1600
Adjustment:	1.00	1.00	1.00	1.00	1.00	1.00	1.00	1.00	1.00	1.00	1.00	1.00
Lanes:	1.00	3.99	0.01	1.00	3.00	1.00	2.00	1.00	1.00	1.00	0.69	0.31
Final Sat.:	1600	6386	14	1600	4800	1600	3200	1600	1600	1600	1110	490
Capacity Analysis Module:												
Vol/Sat:	0.05	0.52	0.52	0.06	0.64	0.12	0.08	0.05	0.03	0.00	0.07	0.07
Crit Moves:	****				****		****				****	

Newport Banning Ranch
Year 2016 Cumulative Conditions with Project
AM Peak Hour

Level Of Service Computation Report
ICU 1(Loss as Cycle Length %) Method (Future Volume Alternative)

Intersection #38 Placentia Ave/18th St

Cycle (sec):	100	Critical Vol./Cap.(X):	0.516
Loss Time (sec):	0 (Y+R=4.0 sec)	Average Delay (sec/veh):	xxxxxx
Optimal Cycle:	38	Level Of Service:	A

Street Name:	Placentia Avenue						18th Street					
Approach:	North Bound			South Bound			East Bound			West Bound		
Movement:	L - T - R			L - T - R			L - T - R			L - T - R		
Control:	Protected			Protected			Permitted			Permitted		
Rights:	Include			Include			Include			Include		
Min. Green:	0	0	0	0	0	0	0	0	0	0	0	0
Lanes:	1 0	1 1	0	1 0	1 1	0	1 0	0 1	0	1 0	0 1	0
Volume Module:												
Base Vol:	25	488	23	38	725	106	46	120	27	41	173	45
Growth Adj:	1.07	1.07	1.07	1.07	1.07	1.07	1.07	1.07	1.07	1.07	1.07	1.07
Initial Bse:	27	523	25	41	777	114	49	129	29	44	185	48
Added Vol:	0	-21	0	0	82	2	6	57	0	0	22	0
Committed P:	0	4	0	0	0	0	0	0	0	0	0	0
Initial Fut:	27	506	25	41	859	116	55	186	29	44	207	48
User Adj:	1.00	1.00	1.00	1.00	1.00	1.00	1.00	1.00	1.00	1.00	1.00	1.00
PHF Adj:	1.00	1.00	1.00	1.00	1.00	1.00	1.00	1.00	1.00	1.00	1.00	1.00
PHF Volume:	27	506	25	41	859	116	55	186	29	44	207	48
Reduct Vol:	0	0	0	0	0	0	0	0	0	0	0	0
Reduced Vol:	27	506	25	41	859	116	55	186	29	44	207	48
PCE Adj:	1.00	1.00	1.00	1.00	1.00	1.00	1.00	1.00	1.00	1.00	1.00	1.00
MLF Adj:	1.00	1.00	1.00	1.00	1.00	1.00	1.00	1.00	1.00	1.00	1.00	1.00
FinalVolume:	27	506	25	41	859	116	55	186	29	44	207	48
Saturation Flow Module:												
Sat/Lane:	1600	1600	1600	1600	1600	1600	1600	1600	1600	1600	1600	1600
Adjustment:	1.00	1.00	1.00	1.00	1.00	1.00	1.00	1.00	1.00	1.00	1.00	1.00
Lanes:	1.00	1.91	0.09	1.00	1.76	0.24	1.00	0.87	0.13	1.00	0.81	0.19
Final Sat.:	1600	3051	149	1600	2820	380	1600	1384	216	1600	1298	302
Capacity Analysis Module:												
Vol/Sat:	0.02	0.17	0.17	0.03	0.30	0.30	0.03	0.13	0.13	0.03	0.16	0.16
Crit Moves:	****				****		****				****	

Newport Banning Ranch
Year 2016 Cumulative Conditions with Project
AM Peak Hour

Level Of Service Computation Report
2000 HCM 4-Way Stop Method (Future Volume Alternative)

Intersection #39 Whittier Ave/17th St

Cycle (sec):	100	Critical Vol./Cap.(X):	0.425
Loss Time (sec):	0 (Y+R=4.0 sec)	Average Delay (sec/veh):	9.6
Optimal Cycle:	0	Level Of Service:	A

Street Name:	Whittier Avenue						17th St					
Approach:	North Bound			South Bound			East Bound			West Bound		
Movement:	L - T - R			L - T - R			L - T - R			L - T - R		
Control:	Stop Sign			Stop Sign			Stop Sign			Stop Sign		
Rights:	Include			Include			Include			Include		
Min. Green:	0	0	0	0	0	0	0	0	0	0	0	0
Lanes:	0 0 0 1 0			0 0 1! 0 0			0 0 1! 0 0			0 0 1! 0 0		
Volume Module:												
Base Vol:	0	35	2	24	23	53	56	2	5	1	0	24
Growth Adj:	1.07	1.07	1.07	1.07	1.07	1.07	1.07	1.07	1.07	1.07	1.07	1.07
Initial Bse:	0	38	2	26	25	57	60	2	5	1	0	26
Added Vol:	0	0	0	0	0	16	44	222	0	0	97	0
Committed P:	0	0	0	0	0	0	0	0	0	0	0	0
Initial Fut:	0	38	2	26	25	73	104	224	5	1	97	26
User Adj:	1.00	1.00	1.00	1.00	1.00	1.00	1.00	1.00	1.00	1.00	1.00	1.00
PHF Adj:	1.00	1.00	1.00	1.00	1.00	1.00	1.00	1.00	1.00	1.00	1.00	1.00
PHF Volume:	0	38	2	26	25	73	104	224	5	1	97	26
Reduct Vol:	0	0	0	0	0	0	0	0	0	0	0	0
Reduced Vol:	0	38	2	26	25	73	104	224	5	1	97	26
PCE Adj:	1.00	1.00	1.00	1.00	1.00	1.00	1.00	1.00	1.00	1.00	1.00	1.00
MLF Adj:	1.00	1.00	1.00	1.00	1.00	1.00	1.00	1.00	1.00	1.00	1.00	1.00
FinalVolume:	0	38	2	26	25	73	104	224	5	1	97	26
Saturation Flow Module:												
Adjustment:	1.00	1.00	1.00	1.00	1.00	1.00	1.00	1.00	1.00	1.00	1.00	1.00
Lanes:	0.00	0.95	0.05	0.21	0.20	0.59	0.31	0.67	0.02	0.01	0.78	0.21
Final Sat.:	0	617	35	149	143	423	245	528	13	7	597	158
Capacity Analysis Module:												
Vol/Sat:	xxxx	0.06	0.06	0.17	0.17	0.17	0.42	0.42	0.42	0.16	0.16	0.16
Crit Moves:		****		****			****			****		
Delay/Veh:	0.0	8.3	8.3	8.5	8.5	8.5	10.6	10.6	10.6	8.4	8.4	8.4
Delay Adj:	1.00	1.00	1.00	1.00	1.00	1.00	1.00	1.00	1.00	1.00	1.00	1.00
AdjDel/Veh:	0.0	8.3	8.3	8.5	8.5	8.5	10.6	10.6	10.6	8.4	8.4	8.4
LOS by Move:	*	A	A	A	A	A	B	B	B	A	A	A
ApproachDel:		8.3			8.5			10.6			8.4	
Delay Adj:		1.00			1.00			1.00			1.00	
ApprAdjDel:		8.3			8.5			10.6			8.4	
LOS by Appr:		A			A			B			A	
AllWayAvgQ:	0.1	0.1	0.1	0.2	0.2	0.2	0.7	0.7	0.7	0.2	0.2	0.2

Newport Banning Ranch
Year 2016 Cumulative Conditions with Project
AM Peak Hour

Note: Queue reported is the number of cars per lane.
****

Newport Banning Ranch
Year 2016 Cumulative Conditions with Project
AM Peak Hour

Level Of Service Computation Report
2000 HCM 4-Way Stop Method (Future Volume Alternative)

Intersection #40 Monrovia Ave/17th St

Cycle (sec):	100	Critical Vol./Cap.(X):	0.677
Loss Time (sec):	0 (Y+R=4.0 sec)	Average Delay (sec/veh):	17.9
Optimal Cycle:	0	Level Of Service:	C

Street Name:	Monrovia Avenue						17th Street					
Approach:	North Bound			South Bound			East Bound			West Bound		
Movement:	L -	T -	R	L -	T -	R	L -	T -	R	L -	T -	R
Control:	Stop Sign			Stop Sign			Stop Sign			Stop Sign		
Rights:	Include			Include			Include			Include		
Min. Green:	0	0	0	0	0	0	0	0	0	0	0	0
Lanes:	0 0	1! 0	0	0 0	1! 0	0	0 0	1! 0	0	0 0	1! 0	0
Volume Module:												
Base Vol:	36	88	63	26	86	12	14	75	32	67	135	56
Growth Adj:	1.07	1.07	1.07	1.07	1.07	1.07	1.07	1.07	1.07	1.07	1.07	1.07
Initial Bse:	39	94	68	28	92	13	15	80	34	72	145	60
Added Vol:	0	85	40	-8	50	27	74	148	0	43	70	-21
Committed P:	0	0	0	0	0	0	0	0	0	0	0	0
Initial Fut:	39	179	108	20	142	40	89	228	34	115	215	39
User Adj:	1.00	1.00	1.00	1.00	1.00	1.00	1.00	1.00	1.00	1.00	1.00	1.00
PHF Adj:	1.00	1.00	1.00	1.00	1.00	1.00	1.00	1.00	1.00	1.00	1.00	1.00
PHF Volume:	39	179	108	20	142	40	89	228	34	115	215	39
Reduct Vol:	0	0	0	0	0	0	0	0	0	0	0	0
Reduced Vol:	39	179	108	20	142	40	89	228	34	115	215	39
PCE Adj:	1.00	1.00	1.00	1.00	1.00	1.00	1.00	1.00	1.00	1.00	1.00	1.00
MLF Adj:	1.00	1.00	1.00	1.00	1.00	1.00	1.00	1.00	1.00	1.00	1.00	1.00
FinalVolume:	39	179	108	20	142	40	89	228	34	115	215	39
Saturation Flow Module:												
Adjustment:	1.00	1.00	1.00	1.00	1.00	1.00	1.00	1.00	1.00	1.00	1.00	1.00
Lanes:	0.12	0.55	0.33	0.10	0.70	0.20	0.25	0.65	0.10	0.31	0.58	0.11
Final Sat.:	63	291	175	46	330	93	136	350	53	170	317	58
Capacity Analysis Module:												
Vol/Sat:	0.62	0.62	0.62	0.43	0.43	0.43	0.65	0.65	0.65	0.68	0.68	0.68
Crit Moves:		****		****				****			****	
Delay/Veh:	17.4	17.4	17.4	13.7	13.7	13.7	18.8	18.8	18.8	19.8	19.8	19.8
Delay Adj:	1.00	1.00	1.00	1.00	1.00	1.00	1.00	1.00	1.00	1.00	1.00	1.00
AdjDel/Veh:	17.4	17.4	17.4	13.7	13.7	13.7	18.8	18.8	18.8	19.8	19.8	19.8
LOS by Move:	C	C	C	B	B	B	C	C	C	C	C	C
ApproachDel:		17.4			13.7			18.8			19.8	
Delay Adj:		1.00			1.00			1.00			1.00	
ApprAdjDel:		17.4			13.7			18.8			19.8	
LOS by Appr:		C			B			C			C	
AllWayAvgQ:	1.2	1.2	1.2	0.5	0.5	0.5	1.4	1.4	1.4	1.6	1.6	1.6

Newport Banning Ranch
Year 2016 Cumulative Conditions with Project
AM Peak Hour

Note: Queue reported is the number of cars per lane.

Newport Banning Ranch
Year 2016 Cumulative Conditions with Project
AM Peak Hour

Level Of Service Computation Report
ICU 1(Loss as Cycle Length %) Method (Future Volume Alternative)

Intersection #41 Placentia Ave/17th St

Cycle (sec):	100	Critical Vol./Cap.(X):	0.530
Loss Time (sec):	0 (Y+R=4.0 sec)	Average Delay (sec/veh):	xxxxxx
Optimal Cycle:	31	Level Of Service:	A

Street Name:	Placentia Avenue						17th St					
Approach:	North Bound			South Bound			East Bound			West Bound		
Movement:	L - T - R			L - T - R			L - T - R			L - T - R		
Control:	Permitted			Permitted			Permitted			Permitted		
Rights:	Include			Include			Include			Include		
Min. Green:	0	0	0	0	0	0	0	0	0	0	0	0
Lanes:	1 0	1 1	0	1 0	1 1	0	1 0	0 1	0	1 0	0 1	0
Volume Module:												
Base Vol:	89	378	59	166	537	77	12	141	31	44	162	80
Growth Adj:	1.07	1.07	1.07	1.07	1.07	1.07	1.07	1.07	1.07	1.07	1.07	1.07
Initial Bse:	95	405	63	178	576	83	13	151	33	47	174	86
Added Vol:	-21	-82	3	0	36	47	60	127	-8	10	67	0
Committed P:	3	5	3	0	2	0	0	0	0	0	0	0
Initial Fut:	77	328	69	178	614	130	73	278	25	57	241	86
User Adj:	1.00	1.00	1.00	1.00	1.00	1.00	1.00	1.00	1.00	1.00	1.00	1.00
PHF Adj:	1.00	1.00	1.00	1.00	1.00	1.00	1.00	1.00	1.00	1.00	1.00	1.00
PHF Volume:	77	328	69	178	614	130	73	278	25	57	241	86
Reduct Vol:	0	0	0	0	0	0	0	0	0	0	0	0
Reduced Vol:	77	328	69	178	614	130	73	278	25	57	241	86
PCE Adj:	1.00	1.00	1.00	1.00	1.00	1.00	1.00	1.00	1.00	1.00	1.00	1.00
MLF Adj:	1.00	1.00	1.00	1.00	1.00	1.00	1.00	1.00	1.00	1.00	1.00	1.00
FinalVolume:	77	328	69	178	614	130	73	278	25	57	241	86
Saturation Flow Module:												
Sat/Lane:	1600	1600	1600	1600	1600	1600	1600	1600	1600	1600	1600	1600
Adjustment:	1.00	1.00	1.00	1.00	1.00	1.00	1.00	1.00	1.00	1.00	1.00	1.00
Lanes:	1.00	1.65	0.35	1.00	1.65	0.35	1.00	0.92	0.08	1.00	0.74	0.26
Final Sat.:	1600	2642	558	1600	2642	558	1600	1467	133	1600	1180	420
Capacity Analysis Module:												
Vol/Sat:	0.05	0.12	0.12	0.11	0.23	0.23	0.05	0.19	0.19	0.04	0.20	0.20
Crit Moves:	****				****		****				****	

Newport Banning Ranch
Year 2016 Cumulative Conditions with Project
AM Peak Hour

Level Of Service Computation Report
2000 HCM 4-Way Stop Method (Future Volume Alternative)

Intersection #42 Pomona Ave/17th St

Cycle (sec):	100	Critical Vol./Cap.(X):	0.881
Loss Time (sec):	0 (Y+R=4.0 sec)	Average Delay (sec/veh):	24.6
Optimal Cycle:	0	Level Of Service:	C

Street Name:	Pomona Avenue						17th Street					
Approach:	North Bound			South Bound			East Bound			West Bound		
Movement:	L -	T -	R	L -	T -	R	L -	T -	R	L -	T -	R
Control:	Stop Sign			Stop Sign			Stop Sign			Stop Sign		
Rights:	Include			Include			Include			Include		
Min. Green:	0	0	0	0	0	0	0	0	0	0	0	0
Lanes:	0 0	1! 0	0	0 0	1! 0	0	1 0	0 1	0	1 0	1 0	1
Volume Module:												
Base Vol:	6	40	19	101	116	59	12	303	29	60	273	53
Growth Adj:	1.07	1.07	1.07	1.07	1.07	1.07	1.07	1.07	1.07	1.07	1.07	1.07
Initial Bse:	6	43	20	108	124	63	13	325	31	64	293	57
Added Vol:	0	0	0	0	0	0	0	134	0	0	69	6
Committed P:	0	0	0	0	0	0	0	0	0	0	0	0
Initial Fut:	6	43	20	108	124	63	13	459	31	64	362	63
User Adj:	1.00	1.00	1.00	1.00	1.00	1.00	1.00	1.00	1.00	1.00	1.00	1.00
PHF Adj:	1.00	1.00	1.00	1.00	1.00	1.00	1.00	1.00	1.00	1.00	1.00	1.00
PHF Volume:	6	43	20	108	124	63	13	459	31	64	362	63
Reduct Vol:	0	0	0	0	0	0	0	0	0	0	0	0
Reduced Vol:	6	43	20	108	124	63	13	459	31	64	362	63
PCE Adj:	1.00	1.00	1.00	1.00	1.00	1.00	1.00	1.00	1.00	1.00	1.00	1.00
MLF Adj:	1.00	1.00	1.00	1.00	1.00	1.00	1.00	1.00	1.00	1.00	1.00	1.00
FinalVolume:	6	43	20	108	124	63	13	459	31	64	362	63
Saturation Flow Module:												
Adjustment:	1.00	1.00	1.00	1.00	1.00	1.00	1.00	1.00	1.00	1.00	1.00	1.00
Lanes:	0.09	0.62	0.29	0.37	0.42	0.21	1.00	0.94	0.06	1.00	1.00	1.00
Final Sat.:	41	271	129	189	217	111	508	521	35	497	539	596
Capacity Analysis Module:												
Vol/Sat:	0.16	0.16	0.16	0.57	0.57	0.57	0.03	0.88	0.88	0.13	0.67	0.11
Crit Moves:	****				****				****		****	
Delay/Veh:	11.4	11.4	11.4	17.1	17.1	17.1	9.8	38.2	38.2	10.7	20.7	9.2
Delay Adj:	1.00	1.00	1.00	1.00	1.00	1.00	1.00	1.00	1.00	1.00	1.00	1.00
AdjDel/Veh:	11.4	11.4	11.4	17.1	17.1	17.1	9.8	38.2	38.2	10.7	20.7	9.2
LOS by Move:	B	B	B	C	C	C	A	E	E	B	C	A
ApproachDel:	11.4			17.1			37.5			17.9		
Delay Adj:	1.00			1.00			1.00			1.00		
ApprAdjDel:	11.4			17.1			37.5			17.9		
LOS by Appr:	B			C			E			C		
AllWayAvgQ:	0.1	0.1	0.1	1.1	1.1	1.1	0.0	4.5	4.5	0.1	1.7	0.1

Newport Banning Ranch
Year 2016 Cumulative Conditions with Project
AM Peak Hour

Note: Queue reported is the number of cars per lane.

Newport Banning Ranch
Year 2016 Cumulative Conditions with Project
AM Peak Hour

Level Of Service Computation Report
ICU 1(Loss as Cycle Length %) Method (Future Volume Alternative)

Intersection #43 Superior Ave/17th St

Cycle (sec):	100	Critical Vol./Cap.(X):	0.806
Loss Time (sec):	0 (Y+R=4.0 sec)	Average Delay (sec/veh):	xxxxxx
Optimal Cycle:	118	Level Of Service:	D

Street Name:	Superior Avenue						17th Street					
Approach:	North Bound			South Bound			East Bound			West Bound		
Movement:	L - T - R			L - T - R			L - T - R			L - T - R		
Control:	Prot+Permit			Prot+Permit			Prot+Permit			Prot+Permit		
Rights:	Include			Include			Include			Include		
Min. Green:	0	0	0	0	0	0	0	0	0	0	0	0
Lanes:	1 0 0 1 1			1 0 1 1 0			1 0 1 1 0			1 0 1 1 0		
Volume Module:												
Base Vol:	39	123	703	49	213	39	8	386	35	363	366	48
Growth Adj:	1.07	1.07	1.07	1.07	1.07	1.07	1.07	1.07	1.07	1.07	1.07	1.07
Initial Bse:	42	132	754	53	228	42	9	414	38	389	392	51
Added Vol:	0	5	124	0	11	0	0	134	0	42	69	0
Committed P:	3	9	0	0	17	0	0	0	3	0	0	0
Initial Fut:	45	146	878	53	256	42	9	548	41	431	461	51
User Adj:	1.00	1.00	1.00	1.00	1.00	1.00	1.00	1.00	1.00	1.00	1.00	1.00
PHF Adj:	1.00	1.00	1.00	1.00	1.00	1.00	1.00	1.00	1.00	1.00	1.00	1.00
PHF Volume:	45	146	878	53	256	42	9	548	41	431	461	51
Reduct Vol:	0	0	0	0	0	0	0	0	0	0	0	0
Reduced Vol:	45	146	878	53	256	42	9	548	41	431	461	51
PCE Adj:	1.00	1.00	1.00	1.00	1.00	1.00	1.00	1.00	1.00	1.00	1.00	1.00
MLF Adj:	1.00	1.00	1.00	1.00	1.00	1.00	1.00	1.00	1.00	1.00	1.00	1.00
FinalVolume:	45	146	878	53	256	42	9	548	41	431	461	51
Saturation Flow Module:												
Sat/Lane:	1600	1600	1600	1600	1600	1600	1600	1600	1600	1600	1600	1600
Adjustment:	1.00	1.00	1.00	1.00	1.00	1.00	1.00	1.00	1.00	1.00	1.00	1.00
Lanes:	1.00	0.29	1.71	1.00	1.72	0.28	1.00	1.86	0.14	1.00	1.80	0.20
Final Sat.:	1600	456	2744	1600	2751	449	1600	2980	220	1600	2879	321
Capacity Analysis Module:												
Vol/Sat:	0.03	0.32	0.32	0.03	0.09	0.09	0.01	0.18	0.18	0.27	0.16	0.16
Crit Moves:		****		****				****		****		

Newport Banning Ranch
Year 2016 Cumulative Conditions with Project
AM Peak Hour

Level Of Service Computation Report
ICU 1(Loss as Cycle Length %) Method (Future Volume Alternative)

Intersection #44 Newport Blvd/17th St

Cycle (sec):	120	Critical Vol./Cap.(X):	0.846
Loss Time (sec):	0 (Y+R=4.0 sec)	Average Delay (sec/veh):	xxxxxx
Optimal Cycle:	148	Level Of Service:	D

Street Name:	Newport Boulevard									17th Street								
Approach:	North Bound			South Bound			East Bound			West Bound		
Movement:	L	- T	- R	L	- T	- R	L	- T	- R	L	- T	- R
Control:	Protected			Protected			Protected			Protected		
Rights:	Include			Include			Include			Include		
Min. Green:	0	0	0	0	0	0	0	0	0	0	0	0
Lanes:	1 0	3 1	0	2 0	3 0	1	3 0	1 1	0	2 0	3 0	1
Volume Module:												
Base Vol:	50	1789	209	559	1808	328	759	396	3	142	400	147
Growth Adj:	1.07	1.07	1.07	1.07	1.07	1.07	1.07	1.07	1.07	1.07	1.07	1.07
Initial Bse:	54	1918	224	599	1938	352	814	425	3	152	429	158
Added Vol:	0	59	21	0	34	79	188	69	0	6	32	0
Committed P:	0	47	0	0	53	0	0	0	0	0	0	0
Initial Fut:	54	2024	245	599	2025	431	1002	494	3	158	461	158
User Adj:	1.00	1.00	1.00	1.00	1.00	1.00	1.00	1.00	1.00	1.00	1.00	1.00
PHF Adj:	1.00	1.00	1.00	1.00	1.00	1.00	1.00	1.00	1.00	1.00	1.00	1.00
PHF Volume:	54	2024	245	599	2025	431	1002	494	3	158	461	158
Reduct Vol:	0	0	0	0	0	0	0	0	0	0	0	0
Reduced Vol:	54	2024	245	599	2025	431	1002	494	3	158	461	158
PCE Adj:	1.00	1.00	1.00	1.00	1.00	1.00	1.00	1.00	1.00	1.00	1.00	1.00
MLF Adj:	1.00	1.00	1.00	1.00	1.00	1.00	1.00	1.00	1.00	1.00	1.00	1.00
FinalVolume:	54	2024	245	599	2025	431	1002	494	3	158	461	158
Saturation Flow Module:												
Sat/Lane:	1600	1600	1600	1600	1600	1600	1600	1600	1600	1600	1600	1600
Adjustment:	1.00	1.00	1.00	1.00	1.00	1.00	1.00	1.00	1.00	1.00	1.00	1.00
Lanes:	1.00	3.57	0.43	2.00	3.00	1.00	3.00	1.99	0.01	2.00	3.00	1.00
Final Sat.:	1600	5709	691	3200	4800	1600	4800	3179	21	3200	4800	1600
Capacity Analysis Module:												
Vol/Sat:	0.03	0.35	0.35	0.19	0.42	0.27	0.21	0.16	0.16	0.05	0.10	0.10
Crit Moves:		****		****			****				****	

Newport Banning Ranch
Year 2016 Cumulative Conditions with Project
AM Peak Hour

Level Of Service Computation Report
ICU 1(Loss as Cycle Length %) Method (Future Volume Alternative)

Intersection #45 Orange Ave/17th St

Cycle (sec):	100	Critical Vol./Cap.(X):	0.470
Loss Time (sec):	0 (Y+R=4.0 sec)	Average Delay (sec/veh):	xxxxxx
Optimal Cycle:	43	Level Of Service:	A

Street Name:	Orange Avenue						17th Street					
Approach:	North Bound			South Bound			East Bound			West Bound		
Movement:	L - T - R			L - T - R			L - T - R			L - T - R		
Control:	Prot+Permit			Prot+Permit			Prot+Permit			Prot+Permit		
Rights:	Include			Include			Include			Include		
Min. Green:	0	0	0	0	0	0	0	0	0	0	0	0
Lanes:	1 0 1	1 0		1 0 1	0 1		1 0 2	0 1		1 0 2	0 1	
Volume Module:												
Base Vol:	106	188	37	123	141	78	42	766	86	40	692	121
Growth Adj:	1.07	1.07	1.07	1.07	1.07	1.07	1.07	1.07	1.07	1.07	1.07	1.07
Initial Bse:	114	202	40	132	151	84	45	821	92	43	742	130
Added Vol:	0	0	0	0	0	0	0	90	0	0	38	0
Committed P:	0	0	0	0	0	0	0	1	0	1	2	1
Initial Fut:	114	202	40	132	151	84	45	912	92	44	782	131
User Adj:	1.00	1.00	1.00	1.00	1.00	1.00	1.00	1.00	1.00	1.00	1.00	1.00
PHF Adj:	1.00	1.00	1.00	1.00	1.00	1.00	1.00	1.00	1.00	1.00	1.00	1.00
PHF Volume:	114	202	40	132	151	84	45	912	92	44	782	131
Reduct Vol:	0	0	0	0	0	0	0	0	0	0	0	0
Reduced Vol:	114	202	40	132	151	84	45	912	92	44	782	131
PCE Adj:	1.00	1.00	1.00	1.00	1.00	1.00	1.00	1.00	1.00	1.00	1.00	1.00
MLF Adj:	1.00	1.00	1.00	1.00	1.00	1.00	1.00	1.00	1.00	1.00	1.00	1.00
FinalVolume:	114	202	40	132	151	84	45	912	92	44	782	131
Saturation Flow Module:												
Sat/Lane:	1600	1600	1600	1600	1600	1600	1600	1600	1600	1600	1600	1600
Adjustment:	1.00	1.00	1.00	1.00	1.00	1.00	1.00	1.00	1.00	1.00	1.00	1.00
Lanes:	1.00	1.67	0.33	1.00	1.00	1.00	1.00	2.00	1.00	1.00	2.00	1.00
Final Sat.:	1600	2674	526	1600	1600	1600	1600	3200	1600	1600	3200	1600
Capacity Analysis Module:												
Vol/Sat:	0.07	0.08	0.08	0.08	0.09	0.05	0.03	0.29	0.06	0.03	0.24	0.08
Crit Moves:		****		****				****		****		

Newport Banning Ranch
Year 2016 Cumulative Conditions with Project
AM Peak Hour

Level Of Service Computation Report
ICU 1(Loss as Cycle Length %) Method (Future Volume Alternative)

Intersection #46 Santa Ana Ave/17th St

Cycle (sec):	100	Critical Vol./Cap.(X):	0.452
Loss Time (sec):	0 (Y+R=4.0 sec)	Average Delay (sec/veh):	xxxxxx
Optimal Cycle:	34	Level Of Service:	A

Street Name:	Santa Ana Avenue						17th Street					
Approach:	North Bound			South Bound			East Bound			West Bound		
Movement:	L - T - R			L - T - R			L - T - R			L - T - R		
Control:	Permitted			Permitted			Prot+Permit			Prot+Permit		
Rights:	Include			Include			Include			Include		
Min. Green:	0	0	0	0	0	0	0	0	0	0	0	0
Lanes:	1 0 1	0 1		1 0 1	0 1		1 0 2	0 1		1 0 2	0 1	
Volume Module:												
Base Vol:	89	120	70	74	106	62	34	787	41	40	761	58
Growth Adj:	1.07	1.07	1.07	1.07	1.07	1.07	1.07	1.07	1.07	1.07	1.07	1.07
Initial Bse:	95	129	75	79	114	66	36	844	44	43	816	62
Added Vol:	0	0	0	0	0	0	0	93	0	0	47	0
Committed P:	0	0	1	1	0	0	0	3	0	2	8	2
Initial Fut:	95	129	76	80	114	66	36	940	44	45	871	64
User Adj:	1.00	1.00	1.00	1.00	1.00	1.00	1.00	1.00	1.00	1.00	1.00	1.00
PHF Adj:	1.00	1.00	1.00	1.00	1.00	1.00	1.00	1.00	1.00	1.00	1.00	1.00
PHF Volume:	95	129	76	80	114	66	36	940	44	45	871	64
Reduct Vol:	0	0	0	0	0	0	0	0	0	0	0	0
Reduced Vol:	95	129	76	80	114	66	36	940	44	45	871	64
PCE Adj:	1.00	1.00	1.00	1.00	1.00	1.00	1.00	1.00	1.00	1.00	1.00	1.00
MLF Adj:	1.00	1.00	1.00	1.00	1.00	1.00	1.00	1.00	1.00	1.00	1.00	1.00
FinalVolume:	95	129	76	80	114	66	36	940	44	45	871	64
Saturation Flow Module:												
Sat/Lane:	1600	1600	1600	1600	1600	1600	1600	1600	1600	1600	1600	1600
Adjustment:	1.00	1.00	1.00	1.00	1.00	1.00	1.00	1.00	1.00	1.00	1.00	1.00
Lanes:	1.00	1.00	1.00	1.00	1.00	1.00	1.00	2.00	1.00	1.00	2.00	1.00
Final Sat.:	1600	1600	1600	1600	1600	1600	1600	3200	1600	1600	3200	1600
Capacity Analysis Module:												
Vol/Sat:	0.06	0.08	0.05	0.05	0.07	0.04	0.02	0.29	0.03	0.03	0.27	0.04
Crit Moves:	****				****			****		****		

Newport Banning Ranch
Year 2016 Cumulative Conditions with Project
AM Peak Hour

Level Of Service Computation Report
ICU 1(Loss as Cycle Length %) Method (Future Volume Alternative)

Intersection #47 Tustin Ave/17th St

Cycle (sec):	100	Critical Vol./Cap.(X):	0.542
Loss Time (sec):	0 (Y+R=4.0 sec)	Average Delay (sec/veh):	xxxxxx
Optimal Cycle:	41	Level Of Service:	A

Street Name:	Tustin Avenue						17th Street					
Approach:	North Bound			South Bound			East Bound			West Bound		
Movement:	L - T - R			L - T - R			L - T - R			L - T - R		
Control:	Permitted			Permitted			Prot+Permit			Prot+Permit		
Rights:	Include			Include			Include			Include		
Min. Green:	0	0	0	0	0	0	0	0	0	0	0	0
Lanes:	1 0 0	1 0		1 0	1 0 1		1 0	1 1 0		1 0	1 1 0	
Volume Module:												
Base Vol:	94	139	80	48	94	39	36	807	91	40	732	34
Growth Adj:	1.07	1.07	1.07	1.07	1.07	1.07	1.07	1.07	1.07	1.07	1.07	1.07
Initial Bse:	101	149	86	51	101	42	39	865	98	43	785	36
Added Vol:	0	0	0	0	0	0	0	93	0	0	47	0
Committed P:	0	0	2	2	0	0	0	7	0	2	14	2
Initial Fut:	101	149	88	53	101	42	39	965	98	45	846	38
User Adj:	1.00	1.00	1.00	1.00	1.00	1.00	1.00	1.00	1.00	1.00	1.00	1.00
PHF Adj:	1.00	1.00	1.00	1.00	1.00	1.00	1.00	1.00	1.00	1.00	1.00	1.00
PHF Volume:	101	149	88	53	101	42	39	965	98	45	846	38
Reduct Vol:	0	0	0	0	0	0	0	0	0	0	0	0
Reduced Vol:	101	149	88	53	101	42	39	965	98	45	846	38
PCE Adj:	1.00	1.00	1.00	1.00	1.00	1.00	1.00	1.00	1.00	1.00	1.00	1.00
MLF Adj:	1.00	1.00	1.00	1.00	1.00	1.00	1.00	1.00	1.00	1.00	1.00	1.00
FinalVolume:	101	149	88	53	101	42	39	965	98	45	846	38
Saturation Flow Module:												
Sat/Lane:	1600	1600	1600	1600	1600	1600	1600	1600	1600	1600	1600	1600
Adjustment:	1.00	1.00	1.00	1.00	1.00	1.00	1.00	1.00	1.00	1.00	1.00	1.00
Lanes:	1.00	0.63	0.37	1.00	1.00	1.00	1.00	1.82	0.18	1.00	1.91	0.09
Final Sat.:	1600	1007	593	1600	1600	1600	1600	2906	294	1600	3061	139
Capacity Analysis Module:												
Vol/Sat:	0.06	0.15	0.15	0.03	0.06	0.03	0.02	0.33	0.33	0.03	0.28	0.28
Crit Moves:		****		****				****		****		

Newport Banning Ranch
Year 2016 Cumulative Conditions with Project
AM Peak Hour

Level Of Service Computation Report
ICU 1(Loss as Cycle Length %) Method (Future Volume Alternative)

Intersection #48 Irvine Ave/17th St

Cycle (sec):	100	Critical Vol./Cap.(X):	0.581
Loss Time (sec):	0 (Y+R=4.0 sec)	Average Delay (sec/veh):	xxxxxx
Optimal Cycle:	54	Level Of Service:	A

Street Name:	Irvine Avenue						17th Street					
Approach:	North Bound			South Bound			East Bound			West Bound		
Movement:	L - T - R			L - T - R			L - T - R			L - T - R		
Control:	Protected			Protected			Protected			Protected		
Rights:	Include			Include			Include			Include		
Min. Green:	0	0	0	0	0	0	0	0	0	0	0	0
Lanes:	2 0 2	0 1		2 0 2	0 1		2 0 1	1 0		1 0 1	1 0	
Volume Module:												
Base Vol:	274	590	35	203	458	127	209	489	217	33	299	40
Growth Adj:	1.07	1.07	1.07	1.07	1.07	1.07	1.07	1.07	1.07	1.07	1.07	1.07
Initial Bse:	294	632	38	218	491	136	224	524	233	35	321	43
Added Vol:	4	1	11	4	2	0	0	88	5	37	43	1
Committed P:	1	1	0	0	0	6	3	9	1	0	14	0
Initial Fut:	299	634	49	222	493	142	227	621	239	72	378	44
User Adj:	1.00	1.00	1.00	1.00	1.00	1.00	1.00	1.00	1.00	1.00	1.00	1.00
PHF Adj:	1.00	1.00	1.00	1.00	1.00	1.00	1.00	1.00	1.00	1.00	1.00	1.00
PHF Volume:	299	634	49	222	493	142	227	621	239	72	378	44
Reduct Vol:	0	0	0	0	0	0	0	0	0	0	0	0
Reduced Vol:	299	634	49	222	493	142	227	621	239	72	378	44
PCE Adj:	1.00	1.00	1.00	1.00	1.00	1.00	1.00	1.00	1.00	1.00	1.00	1.00
MLF Adj:	1.00	1.00	1.00	1.00	1.00	1.00	1.00	1.00	1.00	1.00	1.00	1.00
FinalVolume:	299	634	49	222	493	142	227	621	239	72	378	44
Saturation Flow Module:												
Sat/Lane:	1600	1600	1600	1600	1600	1600	1600	1600	1600	1600	1600	1600
Adjustment:	1.00	1.00	1.00	1.00	1.00	1.00	1.00	1.00	1.00	1.00	1.00	1.00
Lanes:	2.00	2.00	1.00	2.00	2.00	1.00	2.00	1.44	0.56	1.00	1.79	0.21
Final Sat.:	3200	3200	1600	3200	3200	1600	3200	2312	888	1600	2867	333
Capacity Analysis Module:												
Vol/Sat:	0.09	0.20	0.03	0.07	0.15	0.09	0.07	0.27	0.27	0.05	0.13	0.13
Crit Moves:		****		****				****		****		

Newport Banning Ranch
Year 2016 Cumulative Conditions with Project
AM Peak Hour

Level Of Service Computation Report
ICU 1(Loss as Cycle Length %) Method (Future Volume Alternative)

Intersection #49 Placentia Ave/16th St

Cycle (sec):	100	Critical Vol./Cap.(X):	0.405
Loss Time (sec):	0 (Y+R=4.0 sec)	Average Delay (sec/veh):	xxxxxx
Optimal Cycle:	24	Level Of Service:	A

Street Name:	Placentia Avenue						16th Street					
Approach:	North Bound			South Bound			East Bound			West Bound		
Movement:	L - T - R			L - T - R			L - T - R			L - T - R		
Control:	Permitted			Permitted			Permitted			Permitted		
Rights:	Include			Include			Include			Include		
Min. Green:	0	0	0	0	0	0	0	0	0	0	0	0
Lanes:	1 0 1	1 0		1 0 1	1 0		1 0 0	1 0		1 0 0	1 0	
Volume Module:												
Base Vol:	76	454	36	70	442	88	26	57	31	17	105	35
Growth Adj:	1.07	1.07	1.07	1.07	1.07	1.07	1.07	1.07	1.07	1.07	1.07	1.07
Initial Bse:	81	487	39	75	474	94	28	61	33	18	113	38
Added Vol:	-21	-141	0	0	-17	56	41	145	-8	0	61	0
Committed P:	3	13	3	0	3	0	0	0	0	0	0	0
Initial Fut:	63	359	42	75	460	150	69	206	25	18	174	38
User Adj:	1.00	1.00	1.00	1.00	1.00	1.00	1.00	1.00	1.00	1.00	1.00	1.00
PHF Adj:	1.00	1.00	1.00	1.00	1.00	1.00	1.00	1.00	1.00	1.00	1.00	1.00
PHF Volume:	63	359	42	75	460	150	69	206	25	18	174	38
Reduct Vol:	0	0	0	0	0	0	0	0	0	0	0	0
Reduced Vol:	63	359	42	75	460	150	69	206	25	18	174	38
PCE Adj:	1.00	1.00	1.00	1.00	1.00	1.00	1.00	1.00	1.00	1.00	1.00	1.00
MLF Adj:	1.00	1.00	1.00	1.00	1.00	1.00	1.00	1.00	1.00	1.00	1.00	1.00
FinalVolume:	63	359	42	75	460	150	69	206	25	18	174	38
Saturation Flow Module:												
Sat/Lane:	1600	1600	1600	1600	1600	1600	1600	1600	1600	1600	1600	1600
Adjustment:	1.00	1.00	1.00	1.00	1.00	1.00	1.00	1.00	1.00	1.00	1.00	1.00
Lanes:	1.00	1.79	0.21	1.00	1.51	0.49	1.00	0.89	0.11	1.00	0.82	0.18
Final Sat.:	1600	2867	333	1600	2412	788	1600	1425	175	1600	1316	284
Capacity Analysis Module:												
Vol/Sat:	0.04	0.13	0.13	0.05	0.19	0.19	0.04	0.14	0.14	0.01	0.13	0.13
Crit Moves:	****				****		****				****	

Newport Banning Ranch
Year 2016 Cumulative Conditions with Project
AM Peak Hour

Level Of Service Computation Report
ICU 1(Loss as Cycle Length %) Method (Future Volume Alternative)

Intersection #50 Superior Ave/16th St

Cycle (sec):	100	Critical Vol./Cap.(X):	0.558
Loss Time (sec):	0 (Y+R=4.0 sec)	Average Delay (sec/veh):	xxxxxx
Optimal Cycle:	33	Level Of Service:	A

Street Name:	Superior Avenue						16th Street					
Approach:	North Bound			South Bound			East Bound			West Bound		
Movement:	L - T - R			L - T - R			L - T - R			L - T - R		
Control:	Permitted			Permitted			Permitted			Permitted		
Rights:	Include			Include			Include			Include		
Min. Green:	0	0	0	0	0	0	0	0	0	0	0	0
Lanes:	1 0 2	0	1	1 0 1	1	0	1 0 1	0	0	0 1 0	0	1
Volume Module:												
Base Vol:	25	967	66	41	540	130	23	173	0	15	153	15
Growth Adj:	1.07	1.07	1.07	1.07	1.07	1.07	1.07	1.07	1.07	1.07	1.07	1.07
Initial Bse:	27	1037	71	44	579	139	25	185	0	16	164	16
Added Vol:	0	68	0	0	29	34	63	82	0	0	27	0
Committed P:	0	27	0	0	23	0	0	0	0	0	0	0
Initial Fut:	27	1132	71	44	631	173	88	267	0	16	191	16
User Adj:	1.00	1.00	1.00	1.00	1.00	1.00	1.00	1.00	1.00	1.00	1.00	1.00
PHF Adj:	1.00	1.00	1.00	1.00	1.00	1.00	1.00	1.00	1.00	1.00	1.00	1.00
PHF Volume:	27	1132	71	44	631	173	88	267	0	16	191	16
Reduct Vol:	0	0	0	0	0	0	0	0	0	0	0	0
Reduced Vol:	27	1132	71	44	631	173	88	267	0	16	191	16
PCE Adj:	1.00	1.00	1.00	1.00	1.00	1.00	1.00	1.00	1.00	1.00	1.00	1.00
MLF Adj:	1.00	1.00	1.00	1.00	1.00	1.00	1.00	1.00	1.00	1.00	1.00	1.00
FinalVolume:	27	1132	71	44	631	173	88	267	0	16	191	16
Saturation Flow Module:												
Sat/Lane:	1600	1600	1600	1600	1600	1600	1600	1600	1600	1600	1600	1600
Adjustment:	1.00	1.00	1.00	1.00	1.00	1.00	1.00	1.00	1.00	1.00	1.00	1.00
Lanes:	1.00	2.00	1.00	1.00	1.57	0.43	1.00	1.00	0.00	0.08	0.92	1.00
Final Sat.:	1600	3200	1600	1600	2510	690	1600	1600	0	124	1476	1600
Capacity Analysis Module:												
Vol/Sat:	0.02	0.35	0.04	0.03	0.25	0.25	0.05	0.17	0.00	0.01	0.13	0.01
Crit Moves:		****		****				****		****		

Newport Banning Ranch
Year 2016 Cumulative Conditions with Project
AM Peak Hour

Level Of Service Computation Report
ICU 1(Loss as Cycle Length %) Method (Future Volume Alternative)

Intersection #51 Newport Blvd/16th St

Cycle (sec):	120	Critical Vol./Cap.(X):	0.565
Loss Time (sec):	0 (Y+R=4.0 sec)	Average Delay (sec/veh):	xxxxxx
Optimal Cycle:	43	Level Of Service:	A

Street Name:	Newport Boulevard									16th Street								
Approach:	North Bound						South Bound						East Bound						West Bound					
Movement:	L	-	T	-	R		L	-	T	-	R		L	-	T	-	R		L	-	T	-	R	
Control:	Protected						Protected						Permitted						Permitted					
Rights:		Include						Include						Include						Include				
Min. Green:	0	0		0			0	0		0			0	0		0			0	0		0		
Lanes:	1	0	2	1	0		1	0	3	0	1		0	0	1!	0	0		0	0	1!	0	0	
Volume Module:																								
Base Vol:	8	1539		42			60	1370		49			38	44		13			19	68		77		
Growth Adj:	1.07	1.07		1.07			1.07	1.07		1.07			1.07	1.07		1.07			1.07	1.07		1.07		
Initial Bse:	9	1650		45			64	1469		53			41	47		14			20	73		83		
Added Vol:	0	80		0			0	41		0			0	0		0			0	0		0		
Committed P:	2	47		10			0	53		0			0	0		5			12	0		0		
Initial Fut:	11	1777		55			64	1563		53			41	47		19			32	73		83		
User Adj:	1.00	1.00		1.00			1.00	1.00		1.00			1.00	1.00		1.00			1.00	1.00		1.00		
PHF Adj:	1.00	1.00		1.00			1.00	1.00		1.00			1.00	1.00		1.00			1.00	1.00		1.00		
PHF Volume:	11	1777		55			64	1563		53			41	47		19			32	73		83		
Reduct Vol:	0	0		0			0	0		0			0	0		0			0	0		0		
Reduced Vol:	11	1777		55			64	1563		53			41	47		19			32	73		83		
PCE Adj:	1.00	1.00		1.00			1.00	1.00		1.00			1.00	1.00		1.00			1.00	1.00		1.00		
MLF Adj:	1.00	1.00		1.00			1.00	1.00		1.00			1.00	1.00		1.00			1.00	1.00		1.00		
FinalVolume:	11	1777		55			64	1563		53			41	47		19			32	73		83		
Saturation Flow Module:																								
Sat/Lane:	1600	1600		1600			1600	1600		1600			1600	1600		1600			1600	1600		1600		
Adjustment:	1.00	1.00		1.00			1.00	1.00		1.00			1.00	1.00		1.00			1.00	1.00		1.00		
Lanes:	1.00	2.91		0.09			1.00	3.00		1.00			0.38	0.44		0.18			0.17	0.39		0.44		
Final Sat.:	1600	4656		144			1600	4800		1600			610	706		284			276	621		703		
Capacity Analysis Module:																								
Vol/Sat:	0.01	0.38		0.38			0.04	0.33		0.03			0.03	0.07		0.07			0.02	0.12		0.12		
Crit Moves:		****					****						****							****				

Newport Banning Ranch
Year 2016 Cumulative Conditions with Project
AM Peak Hour

Level Of Service Computation Report
ICU 1(Loss as Cycle Length %) Method (Future Volume Alternative)

Intersection #52 Bluff Rd/Victoria St

Cycle (sec):	100	Critical Vol./Cap.(X):	0.511
Loss Time (sec):	0 (Y+R=4.0 sec)	Average Delay (sec/veh):	xxxxxx
Optimal Cycle:	47	Level Of Service:	A

Street Name:	Bluff Road						Victoria St					
Approach:	North Bound			South Bound			East Bound			West Bound		
Movement:	L - T - R			L - T - R			L - T - R			L - T - R		
Control:	Protected			Protected			Protected			Protected		
Rights:	Include			Include			Include			Include		
Min. Green:	0	0	0	0	0	0	0	0	0	0	0	0
Lanes:	0 0 0 0 0			0 0 0 0 0			0 0 2 0 0			0 0 2 0 0		
Volume Module:												
Base Vol:	0	0	0	0	0	0	0	1505	0	0	749	0
Growth Adj:	1.00	1.00	1.00	1.00	1.00	1.00	1.00	1.07	1.00	1.00	1.07	1.00
Initial Bse:	0	0	0	0	0	0	0	1613	0	0	803	0
Added Vol:	0	0	0	0	0	0	0	22	0	0	28	0
PasserByVol:	0	0	0	0	0	0	0	0	0	0	0	0
Initial Fut:	0	0	0	0	0	0	0	1635	0	0	831	0
User Adj:	1.00	1.00	1.00	1.00	1.00	1.00	1.00	1.00	1.00	1.00	1.00	1.00
PHF Adj:	1.00	1.00	1.00	1.00	1.00	1.00	1.00	1.00	1.00	1.00	1.00	1.00
PHF Volume:	0	0	0	0	0	0	0	1635	0	0	831	0
Reduct Vol:	0	0	0	0	0	0	0	0	0	0	0	0
Reduced Vol:	0	0	0	0	0	0	0	1635	0	0	831	0
PCE Adj:	1.00	1.00	1.00	1.00	1.00	1.00	1.00	1.00	1.00	1.00	1.00	1.00
MLF Adj:	1.00	1.00	1.00	1.00	1.00	1.00	1.00	1.00	1.00	1.00	1.00	1.00
FinalVolume:	0	0	0	0	0	0	0	1635	0	0	831	0
Saturation Flow Module:												
Sat/Lane:	1600	1600	1600	1600	1600	1600	1600	1600	1600	1600	1600	1600
Adjustment:	1.00	1.00	1.00	1.00	1.00	1.00	1.00	1.00	1.00	1.00	1.00	1.00
Lanes:	0.00	0.00	0.00	0.00	0.00	0.00	0.00	2.00	0.00	0.00	2.00	0.00
Final Sat.:	0	0	0	0	0	0	0	3200	0	0	3200	0
Capacity Analysis Module:												
Vol/Sat:	0.00	0.00	0.00	0.00	0.00	0.00	0.00	0.51	0.00	0.00	0.26	0.00
Crit Moves:								****		****		

Newport Banning Ranch
Year 2016 Cumulative Conditions with Project
AM Peak Hour

Level Of Service Computation Report
ICU 1(Loss as Cycle Length %) Method (Future Volume Alternative)

Intersection #53 Bluff Rd/19th St

Cycle (sec):	100	Critical Vol./Cap.(X):	0.079
Loss Time (sec):	0 (Y+R=4.0 sec)	Average Delay (sec/veh):	xxxxxx
Optimal Cycle:	16	Level Of Service:	A

Street Name:	Bluff Rd						19th Street					
Approach:	North Bound			South Bound			East Bound			West Bound		
Movement:	L - T - R			L - T - R			L - T - R			L - T - R		
Control:	Permitted			Permitted			Permitted			Permitted		
Rights:	Include			Include			Include			Include		
Min. Green:	0	0	0	0	0	0	0	0	0	0	0	0
Lanes:	0 0 1	0	1	0 1	0	0	0 0 0	0	0	1 0	0	0
Volume Module:												
Base Vol:	0	0	0	0	0	0	0	0	0	0	0	0
Growth Adj:	1.00	1.00	1.00	1.00	1.00	1.00	1.00	1.00	1.00	1.00	1.00	1.00
Initial Bse:	0	0	0	0	0	0	0	0	0	0	0	0
Added Vol:	0	0	97	0	0	0	0	0	0	29	0	0
PasserByVol:	0	0	0	0	0	0	0	0	0	0	0	0
Initial Fut:	0	0	97	0	0	0	0	0	0	29	0	0
User Adj:	1.00	1.00	1.00	1.00	1.00	1.00	1.00	1.00	1.00	1.00	1.00	1.00
PHF Adj:	1.00	1.00	1.00	1.00	1.00	1.00	1.00	1.00	1.00	1.00	1.00	1.00
PHF Volume:	0	0	97	0	0	0	0	0	0	29	0	0
Reduct Vol:	0	0	0	0	0	0	0	0	0	0	0	0
Reduced Vol:	0	0	97	0	0	0	0	0	0	29	0	0
PCE Adj:	1.00	1.00	1.00	1.00	1.00	1.00	1.00	1.00	1.00	1.00	1.00	1.00
MLF Adj:	1.00	1.00	1.00	1.00	1.00	1.00	1.00	1.00	1.00	1.00	1.00	1.00
FinalVolume:	0	0	97	0	0	0	0	0	0	29	0	0
Saturation Flow Module:												
Sat/Lane:	1600	1600	1600	1600	1600	1600	1600	1600	1600	1600	1600	1600
Adjustment:	1.00	1.00	1.00	1.00	1.00	1.00	1.00	1.00	1.00	1.00	1.00	1.00
Lanes:	0.00	1.00	1.00	0.00	1.00	0.00	0.00	0.00	0.00	1.00	0.00	0.00
Final Sat.:	0	1600	1600	0	1600	0	0	0	0	1600	0	0
Capacity Analysis Module:												
Vol/Sat:	0.00	0.00	0.06	0.00	0.00	0.00	0.00	0.00	0.00	0.02	0.00	0.00
Crit Moves:			****							****		

Newport Banning Ranch
Year 2016 Cumulative Conditions with Project
AM Peak Hour

Level Of Service Computation Report
ICU 1(Loss as Cycle Length %) Method (Future Volume Alternative)

Intersection #54 Bluff Rd/17th St

Cycle (sec):	100	Critical Vol./Cap.(X):	0.129
Loss Time (sec):	0 (Y+R=4.0 sec)	Average Delay (sec/veh):	xxxxxx
Optimal Cycle:	17	Level Of Service:	A

Street Name:	Bluff Road						17th Street					
Approach:	North Bound			South Bound			East Bound			West Bound		
Movement:	L - T - R			L - T - R			L - T - R			L - T - R		
Control:	Permitted			Permitted			Permitted			Permitted		
Rights:	Include			Include			Include			Include		
Min. Green:	0	0	0	0	0	0	0	0	0	0	0	0
Lanes:	1 0 1	1 0		1 0 0	1 0		0 1 0	0 0		1 0 1	0 1	
Volume Module:												
Base Vol:	0	0	0	0	0	0	0	0	0	0	0	0
Growth Adj:	1.00	1.00	1.00	1.00	1.00	1.00	1.00	1.00	1.00	1.00	1.00	1.00
Initial Bse:	0	0	0	0	0	0	0	0	0	0	0	0
Added Vol:	0	84	139	0	65	3	10	1	0	57	0	0
PasserByVol:	0	0	0	0	0	0	0	0	0	0	0	0
Initial Fut:	0	84	139	0	65	3	10	1	0	57	0	0
User Adj:	1.00	1.00	1.00	1.00	1.00	1.00	1.00	1.00	1.00	1.00	1.00	1.00
PHF Adj:	1.00	1.00	1.00	1.00	1.00	1.00	1.00	1.00	1.00	1.00	1.00	1.00
PHF Volume:	0	84	139	0	65	3	10	1	0	57	0	0
Reduct Vol:	0	0	0	0	0	0	0	0	0	0	0	0
Reduced Vol:	0	84	139	0	65	3	10	1	0	57	0	0
PCE Adj:	1.00	1.00	1.00	1.00	1.00	1.00	1.00	1.00	1.00	1.00	1.00	1.00
MLF Adj:	1.00	1.00	1.00	1.00	1.00	1.00	1.00	1.00	1.00	1.00	1.00	1.00
FinalVolume:	0	84	139	0	65	3	10	1	0	57	0	0
Saturation Flow Module:												
Sat/Lane:	1600	1600	1600	1600	1600	1600	1600	1600	1600	1600	1600	1600
Adjustment:	1.00	1.00	1.00	1.00	1.00	1.00	1.00	1.00	1.00	1.00	1.00	1.00
Lanes:	1.00	1.00	1.00	1.00	0.96	0.04	0.91	0.09	0.00	1.00	1.00	1.00
Final Sat.:	1600	1600	1600	1600	1529	71	1455	145	0	1600	1600	1600
Capacity Analysis Module:												
Vol/Sat:	0.00	0.05	0.09	0.00	0.04	0.04	0.01	0.01	0.00	0.04	0.00	0.00
Crit Moves:			****	****				****		****		

Newport Banning Ranch
Year 2016 Cumulative Conditions with Project
AM Peak Hour

Level Of Service Computation Report
2000 HCM Unsignalized Method (Future Volume Alternative)

Intersection #55 Bluff Rd/16th St

Average Delay (sec/veh): 3.3 Worst Case Level Of Service: B[13.3]

Street Name:	Bluff Road						16th Street					
Approach:	North Bound			South Bound			East Bound			West Bound		
Movement:	L - T - R			L - T - R			L - T - R			L - T - R		
Control:	Uncontrolled			Uncontrolled			Stop Sign			Stop Sign		
Rights:	Include			Include			Include			Include		
Lanes:	1 0 1	1 0		1 0 1	1 0		0 0 0	1 0		0 0 1!	0 0	
Volume Module:												
Base Vol:	0	0	0	0	0	0	0	0	0	0	0	0
Growth Adj:	1.00	1.00	1.00	1.00	1.00	1.00	1.00	1.00	1.00	1.00	1.00	1.00
Initial Bse:	0	0	0	0	0	0	0	0	0	0	0	0
Added Vol:	7	202	69	105	211	0	0	23	23	25	7	30
PasserByVol:	0	0	0	0	0	0	0	0	0	0	0	0
Initial Fut:	7	202	69	105	211	0	0	23	23	25	7	30
User Adj:	1.00	1.00	1.00	1.00	1.00	1.00	1.00	1.00	1.00	1.00	1.00	1.00
PHF Adj:	1.00	1.00	1.00	1.00	1.00	1.00	1.00	1.00	1.00	1.00	1.00	1.00
PHF Volume:	7	202	69	105	211	0	0	23	23	25	7	30
Reduct Vol:	0	0	0	0	0	0	0	0	0	0	0	0
FinalVolume:	7	202	69	105	211	0	0	23	23	25	7	30
Critical Gap Module:												
Critical Gp:	4.1	xxxx	xxxxx	4.1	xxxx	xxxxx	xxxxx	6.5	6.9	7.5	6.5	6.9
FollowUpTim:	2.2	xxxx	xxxxx	2.2	xxxx	xxxxx	xxxxx	4.0	3.3	3.5	4.0	3.3
Capacity Module:												
Cnflict Vol:	211	xxxx	xxxxx	271	xxxx	xxxxx	xxxx	706	106	578	672	136
Potent Cap.:	1372	xxxx	xxxxx	1304	xxxx	xxxxx	xxxx	363	935	404	380	895
Move Cap.:	1372	xxxx	xxxxx	1304	xxxx	xxxxx	xxxx	332	935	349	348	895
Volume/Cap:	0.01	xxxx	xxxx	0.08	xxxx	xxxx	xxxx	0.07	0.02	0.07	0.02	0.03
Level Of Service Module:												
2Way95thQ:	0.0	xxxx	xxxxx	0.3	xxxx	xxxxx	xxxx	xxxx	xxxxx	xxxx	xxxx	xxxxx
Control Del:	7.6	xxxx	xxxxx	8.0	xxxx	xxxxx	xxxxx	xxxx	xxxxx	xxxxx	xxxx	xxxxx
LOS by Move:	A	*	*	A	*	*	*	*	*	*	*	*
Movement:	LT - LTR - RT			LT - LTR - RT			LT - LTR - RT			LT - LTR - RT		
Shared Cap.:	xxxx	xxxx	xxxxx	xxxx	xxxx	xxxxx	xxxx	xxxx	490	xxxx	495	xxxxx
SharedQueue:	xxxxx	xxxx	xxxxx	xxxxx	xxxx	xxxxx	xxxxx	xxxx	0.3	xxxxx	0.4	xxxxx
Shrd ConDel:	xxxxx	xxxx	xxxxx	xxxxx	xxxx	xxxxx	xxxxx	xxxx	13.1	xxxxx	13.3	xxxxx
Shared LOS:	*	*	*	*	*	*	*	*	B	*	B	*
ApproachDel:	xxxxxx			xxxxxx			13.1			13.3		
ApproachLOS:	*			*			B			B		

Note: Queue reported is the number of cars per lane.

Newport Banning Ranch
Year 2016 Cumulative Conditions with Project
AM Peak Hour

Level Of Service Computation Report
ICU 1(Loss as Cycle Length %) Method (Future Volume Alternative)

Intersection #56 Bluff Rd/15th St

Cycle (sec):	100	Critical Vol./Cap.(X):	0.188
Loss Time (sec):	0 (Y+R=4.0 sec)	Average Delay (sec/veh):	xxxxxx
Optimal Cycle:	23	Level Of Service:	A

Street Name:	Bluff Road						15th Street					
Approach:	North Bound			South Bound			East Bound			West Bound		
Movement:	L - T - R			L - T - R			L - T - R			L - T - R		
Control:	Split Phase			Split Phase			Permitted			Permitted		
Rights:	Include			Include			Include			Include		
Min. Green:	0	0	0	0	0	0	0	0	0	0	0	0
Lanes:	0 0 0 0 0			1 0 0 0 2			2 0 2 0 0			0 0 2 1 0		
Volume Module:												
Base Vol:	0	0	0	0	0	0	0	0	0	0	0	0
Growth Adj:	1.00	1.00	1.00	1.00	1.00	1.00	1.00	1.00	1.00	1.00	1.00	1.00
Initial Bse:	0	0	0	0	0	0	0	0	0	0	0	0
Added Vol:	0	0	0	46	0	257	275	246	0	0	92	14
PasserByVol:	0	0	0	0	0	0	0	0	0	0	0	0
Initial Fut:	0	0	0	46	0	257	275	246	0	0	92	14
User Adj:	1.00	1.00	1.00	1.00	1.00	1.00	1.00	1.00	1.00	1.00	1.00	1.00
PHF Adj:	1.00	1.00	1.00	1.00	1.00	1.00	1.00	1.00	1.00	1.00	1.00	1.00
PHF Volume:	0	0	0	46	0	257	275	246	0	0	92	14
Reduct Vol:	0	0	0	0	0	0	0	0	0	0	0	0
Reduced Vol:	0	0	0	46	0	257	275	246	0	0	92	14
PCE Adj:	1.00	1.00	1.00	1.00	1.00	1.00	1.00	1.00	1.00	1.00	1.00	1.00
MLF Adj:	1.00	1.00	1.00	1.00	1.00	1.00	1.00	1.00	1.00	1.00	1.00	1.00
FinalVolume:	0	0	0	46	0	257	275	246	0	0	92	14
Saturation Flow Module:												
Sat/Lane:	1600	1600	1600	1600	1600	1600	1600	1600	1600	1600	1600	1600
Adjustment:	1.00	1.00	1.00	1.00	1.00	1.00	1.00	1.00	1.00	1.00	1.00	1.00
Lanes:	0.00	0.00	0.00	1.00	0.00	2.00	2.00	2.00	0.00	0.00	2.60	0.40
Final Sat.:	0	0	0	1600	0	3200	3200	3200	0	0	4166	634
Capacity Analysis Module:												
Vol/Sat:	0.00	0.00	0.00	0.03	0.00	0.08	0.09	0.08	0.00	0.00	0.02	0.02
Crit Moves:						****	****				****	

Newport Banning Ranch
Year 2016 Cumulative Conditions with Project
AM Peak Hour

Level Of Service Computation Report
ICU 1(Loss as Cycle Length %) Method (Future Volume Alternative)

Intersection #57 Bluff Rd/W. Coast Hwy

Cycle (sec):	120	Critical Vol./Cap.(X):	0.670
Loss Time (sec):	0 (Y+R=4.0 sec)	Average Delay (sec/veh):	xxxxxx
Optimal Cycle:	69	Level Of Service:	B

Street Name:	Bluff Road									W. Coast Highway								
Approach:	North Bound						South Bound						East Bound						West Bound					
Movement:	L	-	T	-	R		L	-	T	-	R		L	-	T	-	R		L	-	T	-	R	
Control:	Split Phase						Split Phase						Protected						Protected					
Rights:	Include						Include						Include						Include					
Min. Green:	0	0	0				0	0	0				0	0	0				0	0	0			
Lanes:	0	0	0	0	0		2	0	0	0	2		2	0	3	0	0		0	0	3	0	1	
Volume Module:																								
Base Vol:	0	0	0				0	0	0				0	2834	0				0	1183	0			
Growth Adj:	1.00	1.00	1.00				1.00	1.00	1.00				1.00	1.07	1.00				1.00	1.07	1.00			
Initial Bse:	0	0	0				0	0	0				0	3038	0				0	1268	0			
Added Vol:	0	0	0				115	0	277				406	-238	0				0	24	45			
PasserByVol:	0	0	0				0	0	0				0	0	0				0	0	0			
Initial Fut:	0	0	0				115	0	277				406	2800	0				0	1292	45			
User Adj:	1.00	1.00	1.00				1.00	1.00	1.00				1.00	1.00	1.00				1.00	1.00	1.00			
PHF Adj:	1.00	1.00	1.00				1.00	1.00	1.00				1.00	1.00	1.00				1.00	1.00	1.00			
PHF Volume:	0	0	0				115	0	277				406	2800	0				0	1292	45			
Reduct Vol:	0	0	0				0	0	0				0	0	0				0	0	0			
Reduced Vol:	0	0	0				115	0	277				406	2800	0				0	1292	45			
PCE Adj:	1.00	1.00	1.00				1.00	1.00	1.00				1.00	1.00	1.00				1.00	1.00	1.00			
MLF Adj:	1.00	1.00	1.00				1.00	1.00	1.00				1.00	1.00	1.00				1.00	1.00	1.00			
FinalVolume:	0	0	0				115	0	277				406	2800	0				0	1292	45			
Saturation Flow Module:																								
Sat/Lane:	1600	1600	1600				1600	1600	1600				1600	1600	1600				1600	1600	1600			
Adjustment:	1.00	1.00	1.00				1.00	1.00	1.00				1.00	1.00	1.00				1.00	1.00	1.00			
Lanes:	0.00	0.00	0.00				2.00	0.00	2.00				2.00	3.00	0.00				0.00	3.00	1.00			
Final Sat.:	0	0	0				3200	0	3200				3200	4800	0				0	4800	1600			
Capacity Analysis Module:																								
Vol/Sat:	0.00	0.00	0.00				0.04	0.00	0.09				0.13	0.58	0.00				0.00	0.27	0.03			
Crit Moves:									****					****					****					

Newport Banning Ranch
Year 2016 Cumulative Conditions with Project
AM Peak Hour

Level Of Service Computation Report
2000 HCM 4-Way Stop Method (Future Volume Alternative)

Intersection #58 Monrovia Ave/15th Street

Cycle (sec):	100	Critical Vol./Cap.(X):	0.384
Loss Time (sec):	0 (Y+R=4.0 sec)	Average Delay (sec/veh):	9.6
Optimal Cycle:	0	Level Of Service:	A

Street Name:	Monrovia Ave						15th Street					
Approach:	North Bound			South Bound			East Bound			West Bound		
Movement:	L - T - R			L - T - R			L - T - R			L - T - R		
Control:	Stop Sign			Stop Sign			Stop Sign			Stop Sign		
Rights:	Include			Include			Include			Include		
Min. Green:	0	0	0	0	0	0	0	0	0	0	0	0
Lanes:	0 0 0 1 0			0 0 1! 0 0			0 1 0 0 0			0 0 1! 0 0		
Volume Module: >> Count Date: 4 May 2011 << Existing AM Peak Hour												
Base Vol:	0	6	11	113	3	1	1	0	0	5	2	82
Growth Adj:	1.00	1.00	1.00	1.00	1.00	1.00	1.00	1.00	1.00	1.00	1.00	1.00
Initial Bse:	0	6	11	113	3	1	1	0	0	5	2	82
Added Vol:	0	0	0	13	0	23	63	229	0	0	83	24
PasserByVol:	0	0	0	0	0	0	0	0	0	0	0	0
Initial Fut:	0	6	11	126	3	24	64	229	0	5	85	106
User Adj:	1.00	1.00	1.00	1.00	1.00	1.00	1.00	1.00	1.00	1.00	1.00	1.00
PHF Adj:	1.00	1.00	1.00	1.00	1.00	1.00	1.00	1.00	1.00	1.00	1.00	1.00
PHF Volume:	0	6	11	126	3	24	64	229	0	5	85	106
Reduct Vol:	0	0	0	0	0	0	0	0	0	0	0	0
Reduced Vol:	0	6	11	126	3	24	64	229	0	5	85	106
PCE Adj:	1.00	1.00	1.00	1.00	1.00	1.00	1.00	1.00	1.00	1.00	1.00	1.00
MLF Adj:	1.00	1.00	1.00	1.00	1.00	1.00	1.00	1.00	1.00	1.00	1.00	1.00
FinalVolume:	0	6	11	126	3	24	64	229	0	5	85	106
Saturation Flow Module:												
Adjustment:	1.00	1.00	1.00	1.00	1.00	1.00	1.00	1.00	1.00	1.00	1.00	1.00
Lanes:	0.00	0.35	0.65	0.82	0.02	0.16	0.22	0.78	0.00	0.03	0.43	0.54
Final Sat.:	0	236	433	547	13	104	167	596	0	20	346	431
Capacity Analysis Module:												
Vol/Sat:	xxxx	0.03	0.03	0.23	0.23	0.23	0.38	0.38	xxxx	0.25	0.25	0.25
Crit Moves:		****		****				****			****	
Delay/Veh:	0.0	7.9	7.9	9.4	9.4	9.4	10.3	10.3	0.0	8.7	8.7	8.7
Delay Adj:	1.00	1.00	1.00	1.00	1.00	1.00	1.00	1.00	1.00	1.00	1.00	1.00
AdjDel/Veh:	0.0	7.9	7.9	9.4	9.4	9.4	10.3	10.3	0.0	8.7	8.7	8.7
LOS by Move:	*	A	A	A	A	A	B	B	*	A	A	A
ApproachDel:		7.9			9.4			10.3			8.7	
Delay Adj:		1.00			1.00			1.00			1.00	
ApprAdjDel:		7.9			9.4			10.3			8.7	
LOS by Appr:		A			A			B			A	
AllWayAvgQ:	0.0	0.0	0.0	0.3	0.3	0.3	0.6	0.6	0.6	0.3	0.3	0.3

Newport Banning Ranch
Year 2016 Cumulative Conditions with Project
AM Peak Hour

Note: Queue reported is the number of cars per lane.

Newport Banning Ranch
Year 2016 Cumulative Conditions with Project
AM Peak Hour

Level Of Service Computation Report
ICU 1(Loss as Cycle Length %) Method (Future Volume Alternative)

Intersection #100 Pomona Ave/16th St

Cycle (sec):	100	Critical Vol./Cap.(X):	0.027
Loss Time (sec):	0 (Y+R=4.0 sec)	Average Delay (sec/veh):	xxxxxx
Optimal Cycle:	15	Level Of Service:	A

Street Name:	Pomona Avenue						16th Street					
Approach:	North Bound			South Bound			East Bound			West Bound		
Movement:	L - T - R			L - T - R			L - T - R			L - T - R		
Control:	Permitted			Permitted			Permitted			Permitted		
Rights:	Include			Include			Include			Include		
Min. Green:	0	0	0	0	0	0	0	0	0	0	0	0
Lanes:	0 0 0 0 0			1 0 0 1 0			1 0 0 1 0			0 0 0 1 0		
Volume Module:												
Base Vol:	0	0	0	37	30	11	0	-200	0	0	-200	0
Growth Adj:	1.07	1.07	1.07	1.07	1.07	1.07	1.07	1.07	1.07	1.07	1.07	1.07
Initial Bse:	0	0	0	40	32	12	0	-214	0	0	-214	0
Added Vol:	0	0	0	0	0	0	0	144	0	0	60	0
PasserByVol:	0	0	0	0	0	0	0	0	0	0	0	0
Initial Fut:	0	0	0	40	32	12	0	-70	0	0	-154	0
User Adj:	1.00	1.00	1.00	1.00	1.00	1.00	1.00	0.00	1.00	1.00	0.00	1.00
PHF Adj:	1.00	1.00	1.00	1.00	1.00	1.00	1.00	0.00	1.00	1.00	0.00	1.00
PHF Volume:	0	0	0	40	32	12	0	0	0	0	0	0
Reduct Vol:	0	0	0	0	0	0	0	0	0	0	0	0
Reduced Vol:	0	0	0	40	32	12	0	0	0	0	0	0
PCE Adj:	1.00	1.00	1.00	1.00	1.00	1.00	1.00	0.00	1.00	1.00	0.00	1.00
MLF Adj:	1.00	1.00	1.00	1.00	1.00	1.00	1.00	0.00	1.00	1.00	0.00	1.00
FinalVolume:	0	0	0	40	32	12	0	0	0	0	0	0
Saturation Flow Module:												
Sat/Lane:	1600	1600	1600	1600	1600	1600	1600	1600	1600	1600	1600	1600
Adjustment:	1.00	1.00	1.00	1.00	1.00	1.00	1.00	1.00	1.00	1.00	1.00	1.00
Lanes:	0.00	0.00	0.00	1.00	0.73	0.27	1.00	1.00	0.00	0.00	1.00	0.00
Final Sat.:	0	0	0	1600	1171	429	1600	1600	0	0	1600	0
Capacity Analysis Module:												
Vol/Sat:	0.00	0.00	0.00	0.02	0.03	0.03	0.00	0.00	0.00	0.00	0.00	0.00
Crit Moves:					****							

Newport Banning Ranch
Year 2016 Cumulative Conditions with Project
PM Peak Hour

Scenario Report

Scenario:	CEQA 2016 w/ Project PM ICU
Command:	CEQA 2016 w/ Project PM ICU
Volume:	Existing+Commited PM
Geometry:	2016 Planned ICU
Impact Fee:	Default Impact Fee
Trip Generation:	Cumulative + Proj PM
Trip Distribution:	Cumul+Project
Paths:	Bluff to 19th
Routes:	Default Route
Configuration:	2016 ICU

Newport Banning Ranch
Year 2016 Cumulative Conditions with Project
PM Peak Hour

Level Of Service Computation Report
2000 HCM 4-Way Stop Method (Future Volume Alternative)

Intersection #1 Monrovia Ave/16th St

Cycle (sec):	100	Critical Vol./Cap.(X):	0.452
Loss Time (sec):	0 (Y+R=4.0 sec)	Average Delay (sec/veh):	11.2
Optimal Cycle:	0	Level Of Service:	B

Street Name:	Monrovia Avenue						16th Street					
Approach:	North Bound			South Bound			East Bound			West Bound		
Movement:	L - T - R			L - T - R			L - T - R			L - T - R		
Control:	Stop Sign			Stop Sign			Stop Sign			Stop Sign		
Rights:	Include			Include			Include			Include		
Min. Green:	0	0	0	0	0	0	0	0	0	0	0	0
Lanes:	0 0	1! 0	0	0 0	1! 0	0	0 0	1! 0	0	0 0	1! 0	0
Volume Module:												
Base Vol:	8	73	23	29	95	17	37	70	21	18	23	31
Growth Adj:	1.00	1.00	1.00	1.00	1.00	1.00	1.00	1.00	1.00	1.00	1.00	1.00
Initial Bse:	8	73	23	29	95	17	37	70	21	18	23	31
Added Vol:	0	21	22	-17	51	42	16	94	0	53	177	-5
Committed P:	0	0	0	0	0	0	0	0	0	0	0	0
Initial Fut:	8	94	45	12	146	59	53	164	21	71	200	26
User Adj:	1.00	1.00	1.00	1.00	1.00	1.00	1.00	1.00	1.00	1.00	1.00	1.00
PHF Adj:	1.00	1.00	1.00	1.00	1.00	1.00	1.00	1.00	1.00	1.00	1.00	1.00
PHF Volume:	8	94	45	12	146	59	53	164	21	71	200	26
Reduct Vol:	0	0	0	0	0	0	0	0	0	0	0	0
Reduced Vol:	8	94	45	12	146	59	53	164	21	71	200	26
PCE Adj:	1.00	1.00	1.00	1.00	1.00	1.00	1.00	1.00	1.00	1.00	1.00	1.00
MLF Adj:	1.00	1.00	1.00	1.00	1.00	1.00	1.00	1.00	1.00	1.00	1.00	1.00
FinalVolume:	8	94	45	12	146	59	53	164	21	71	200	26
Saturation Flow Module:												
Adjustment:	1.00	1.00	1.00	1.00	1.00	1.00	1.00	1.00	1.00	1.00	1.00	1.00
Lanes:	0.05	0.64	0.31	0.06	0.67	0.27	0.22	0.69	0.09	0.24	0.67	0.09
Final Sat.:	33	384	184	34	419	169	143	442	57	157	443	58
Capacity Analysis Module:												
Vol/Sat:	0.25	0.25	0.25	0.35	0.35	0.35	0.37	0.37	0.37	0.45	0.45	0.45
Crit Moves:	****				****			****			****	
Delay/Veh:	10.0	10.0	10.0	10.8	10.8	10.8	11.1	11.1	11.1	12.1	12.1	12.1
Delay Adj:	1.00	1.00	1.00	1.00	1.00	1.00	1.00	1.00	1.00	1.00	1.00	1.00
AdjDel/Veh:	10.0	10.0	10.0	10.8	10.8	10.8	11.1	11.1	11.1	12.1	12.1	12.1
LOS by Move:	A	A	A	B	B	B	B	B	B	B	B	B
ApproachDel:	10.0			10.8			11.1			12.1		
Delay Adj:	1.00			1.00			1.00			1.00		
ApprAdjDel:	10.0			10.8			11.1			12.1		
LOS by Appr:	A			B			B			B		
AllWayAvgQ:	0.3	0.3	0.3	0.4	0.4	0.4	0.5	0.5	0.5	0.7	0.7	0.7

Newport Banning Ranch
Year 2016 Cumulative Conditions with Project
PM Peak Hour

Note: Queue reported is the number of cars per lane.
****

Newport Banning Ranch
Year 2016 Cumulative Conditions with Project
PM Peak Hour

Level Of Service Computation Report
ICU 1(Loss as Cycle Length %) Method (Future Volume Alternative)

Intersection #2 Placentia Ave/15th St

Cycle (sec):	100	Critical Vol./Cap.(X):	0.519
Loss Time (sec):	0 (Y+R=4.0 sec)	Average Delay (sec/veh):	xxxxxx
Optimal Cycle:	47	Level Of Service:	A

Street Name:	Placentia Ave						15th Street					
Approach:	North Bound			South Bound			East Bound			West Bound		
Movement:	L - T - R			L - T - R			L - T - R			L - T - R		
Control:	Prot+Permit			Prot+Permit			Split Phase			Split Phase		
Rights:	Include			Include			Include			Include		
Min. Green:	0	0	0	0	0	0	0	0	0	0	0	0
Lanes:	1 0 1	1 0		1 0 1	1 0		0 0 1!	0 0		0 1 0	0 1	
Volume Module:												
Base Vol:	71	440	17	14	394	30	27	23	132	10	48	84
Growth Adj:	1.00	1.00	1.00	1.00	1.00	1.00	1.00	1.00	1.00	1.00	1.00	1.00
Initial Bse:	71	440	17	14	394	30	27	23	132	10	48	84
Added Vol:	178	-41	0	0	-177	31	15	0	112	0	70	0
Committed P:	0	32	0	0	12	0	0	0	0	0	0	0
Initial Fut:	249	431	17	14	229	61	42	23	244	10	118	84
User Adj:	1.00	1.00	1.00	1.00	1.00	1.00	1.00	1.00	1.00	1.00	1.00	1.00
PHF Adj:	1.00	1.00	1.00	1.00	1.00	1.00	1.00	1.00	1.00	1.00	1.00	1.00
PHF Volume:	249	431	17	14	229	61	42	23	244	10	118	84
Reduct Vol:	0	0	0	0	0	0	0	0	0	0	0	0
Reduced Vol:	249	431	17	14	229	61	42	23	244	10	118	84
PCE Adj:	1.00	1.00	1.00	1.00	1.00	1.00	1.00	1.00	1.00	1.00	1.00	1.00
MLF Adj:	1.00	1.00	1.00	1.00	1.00	1.00	1.00	1.00	1.00	1.00	1.00	1.00
FinalVolume:	249	431	17	14	229	61	42	23	244	10	118	84
Saturation Flow Module:												
Sat/Lane:	1600	1600	1600	1600	1600	1600	1600	1600	1600	1600	1600	1600
Adjustment:	1.00	1.00	1.00	1.00	1.00	1.00	1.00	1.00	1.00	1.00	1.00	1.00
Lanes:	1.00	1.92	0.08	1.00	1.58	0.42	0.14	0.07	0.79	0.08	0.92	1.00
Final Sat.:	1600	3079	121	1600	2527	673	217	119	1263	125	1475	1600
Capacity Analysis Module:												
Vol/Sat:	0.16	0.14	0.14	0.01	0.09	0.09	0.19	0.19	0.19	0.08	0.08	0.05
Crit Moves:	****				****			****			****	

Newport Banning Ranch
Year 2016 Cumulative Conditions with Project
PM Peak Hour

Level Of Service Computation Report
2000 HCM Unsignalized Method (Future Volume Alternative)

Intersection #3 Superior Ave/15th St

Average Delay (sec/veh): 1.2 Worst Case Level Of Service: D[33.0]

Street Name:	Superior Avenue						15th Street					
Approach:	North Bound			South Bound			East Bound			West Bound		
Movement:	L - T - R			L - T - R			L - T - R			L - T - R		
Control:	Uncontrolled			Uncontrolled			Stop Sign			Stop Sign		
Rights:	Include			Include			Include			Include		
Lanes:	1 0 2 0 0			0 0 1 1 0			1 0 0 0 1			0 0 0 0 0		
Volume Module:												
Base Vol:	35	593	0	0	786	92	35	0	24	0	0	0
Growth Adj:	1.00	1.00	1.00	1.00	1.00	1.00	1.00	1.00	1.00	1.00	1.00	1.00
Initial Bse:	35	593	0	0	786	92	35	0	24	0	0	0
Added Vol:	0	78	0	0	27	70	0	0	0	0	0	0
Committed P:	0	40	0	0	124	0	0	0	0	0	0	0
Initial Fut:	35	711	0	0	937	162	35	0	24	0	0	0
User Adj:	1.00	1.00	1.00	1.00	1.00	1.00	1.00	1.00	1.00	1.00	1.00	1.00
PHF Adj:	1.00	1.00	1.00	1.00	1.00	1.00	1.00	1.00	1.00	1.00	1.00	1.00
PHF Volume:	35	711	0	0	937	162	35	0	24	0	0	0
Reduct Vol:	0	0	0	0	0	0	0	0	0	0	0	0
FinalVolume:	35	711	0	0	937	162	35	0	24	0	0	0
Critical Gap Module:												
Critical Gp:	4.1	xxxx	xxxxx	xxxxx	xxxx	xxxxx	6.8	xxxx	6.9	xxxxx	xxxx	xxxxx
FollowUpTim:	2.2	xxxx	xxxxx	xxxxx	xxxx	xxxxx	3.5	xxxx	3.3	xxxxx	xxxx	xxxxx
Capacity Module:												
Cnflict Vol:	1099	xxxx	xxxxx	xxxx	xxxx	xxxxx	1444	xxxx	550	xxxx	xxxx	xxxxx
Potent Cap.:	643	xxxx	xxxxx	xxxx	xxxx	xxxxx	125	xxxx	484	xxxx	xxxx	xxxxx
Move Cap.:	643	xxxx	xxxxx	xxxx	xxxx	xxxxx	120	xxxx	484	xxxx	xxxx	xxxxx
Volume/Cap:	0.05	xxxx	xxxx	xxxx	xxxx	xxxx	0.29	xxxx	0.05	xxxx	xxxx	xxxx
Level Of Service Module:												
2Way95thQ:	0.2	xxxx	xxxxx	xxxx	xxxx	xxxxx	1.1	xxxx	0.2	xxxx	xxxx	xxxxx
Control Del:	10.9	xxxx	xxxxx	xxxxx	xxxx	xxxxx	46.9	xxxx	12.8	xxxxx	xxxx	xxxxx
LOS by Move:	B	*	*	*	*	*	E	*	B	*	*	*
Movement:	LT - LTR - RT			LT - LTR - RT			LT - LTR - RT			LT - LTR - RT		
Shared Cap.:	xxxx	xxxx	xxxxx	xxxx	xxxx	xxxxx	xxxx	xxxx	xxxxx	xxxx	xxxx	xxxxx
SharedQueue:	xxxxx	xxxx	xxxxx	xxxxx	xxxx	xxxxx	xxxxx	xxxx	xxxxx	xxxxx	xxxx	xxxxx
Shrd ConDel:	xxxxx	xxxx	xxxxx	xxxxx	xxxx	xxxxx	xxxxx	xxxx	xxxxx	xxxxx	xxxx	xxxxx
Shared LOS:	*	*	*	*	*	*	*	*	*	*	*	*
ApproachDel:	xxxxxx			xxxxxx			33.0			xxxxxx		
ApproachLOS:	*			*			D			*		

Note: Queue reported is the number of cars per lane.

Newport Banning Ranch
Year 2016 Cumulative Conditions with Project
PM Peak Hour

Level Of Service Computation Report
ICU 1(Loss as Cycle Length %) Method (Future Volume Alternative)

Intersection #4 Superior Ave/Placentia Ave

Cycle (sec):	100	Critical Vol./Cap.(X):	0.592
Loss Time (sec):	0 (Y+R=4.0 sec)	Average Delay (sec/veh):	xxxxxx
Optimal Cycle:	46	Level Of Service:	A

Street Name:	Superior Avenue						Placentia Avenue					
Approach:	North Bound			South Bound			East Bound			West Bound		
Movement:	L - T - R			L - T - R			L - T - R			L - T - R		
Control:	Protected			Protected			Permitted			Permitted		
Rights:	Include			Include			Include			Include		
Min. Green:	0	0	0	0	0	0	0	0	0	0	0	0
Lanes:	1 0 1	1 0		1 0 1	1 0		1 0 1	0 1		0 1 0	1 0	
Volume Module:												
Base Vol:	224	419	22	57	664	11	11	166	316	41	287	86
Growth Adj:	1.00	1.00	1.00	1.00	1.00	1.00	1.00	1.00	1.00	1.00	1.00	1.00
Initial Bse:	224	419	22	57	664	11	11	166	316	41	287	86
Added Vol:	-18	-40	0	0	-128	155	118	0	-183	0	0	0
Committed P:	0	40	0	55	69	0	0	2	0	6	32	0
Initial Fut:	206	419	22	112	605	166	129	168	133	47	319	86
User Adj:	1.00	1.00	1.00	1.00	1.00	1.00	1.00	1.00	1.00	1.00	1.00	1.00
PHF Adj:	1.00	1.00	1.00	1.00	1.00	1.00	1.00	1.00	1.00	1.00	1.00	1.00
PHF Volume:	206	419	22	112	605	166	129	168	133	47	319	86
Reduct Vol:	0	0	0	0	0	0	0	0	0	0	0	0
Reduced Vol:	206	419	22	112	605	166	129	168	133	47	319	86
PCE Adj:	1.00	1.00	1.00	1.00	1.00	1.00	1.00	1.00	1.00	1.00	1.00	1.00
MLF Adj:	1.00	1.00	1.00	1.00	1.00	1.00	1.00	1.00	1.00	1.00	1.00	1.00
FinalVolume:	206	419	22	112	605	166	129	168	133	47	319	86
Saturation Flow Module:												
Sat/Lane:	1600	1600	1600	1600	1600	1600	1600	1600	1600	1600	1600	1600
Adjustment:	1.00	1.00	1.00	1.00	1.00	1.00	1.00	1.00	1.00	1.00	1.00	1.00
Lanes:	1.00	1.90	0.10	1.00	1.57	0.43	1.00	1.00	1.00	0.21	1.41	0.38
Final Sat.:	1600	3040	160	1600	2511	689	1600	1600	1600	333	2258	609
Capacity Analysis Module:												
Vol/Sat:	0.13	0.14	0.14	0.07	0.24	0.24	0.08	0.11	0.08	0.03	0.14	0.14
Crit Moves:	****				****		****				****	

Newport Banning Ranch
Year 2016 Cumulative Conditions with Project
PM Peak Hour

Level Of Service Computation Report
ICU 1(Loss as Cycle Length %) Method (Future Volume Alternative)

Intersection #5 Hospital Rd/Newport Blvd

Cycle (sec):	120	Critical Vol./Cap.(X):	0.647
Loss Time (sec):	0 (Y+R=4.0 sec)	Average Delay (sec/veh):	xxxxxx
Optimal Cycle:	65	Level Of Service:	B

Street Name:	Newport Boulevard						Hospital Road					
Approach:	North Bound			South Bound			East Bound			West Bound		
Movement:	L - T - R			L - T - R			L - T - R			L - T - R		
Control:	Protected			Protected			Protected			Protected		
Rights:	Include			Include			Include			Include		
Min. Green:	0	0	0	0	0	0	0	0	0	0	0	0
Lanes:	1 0 3 0 1			1 0 3 0 1			2 0 1 0 1			1 0 1 1 0		
Volume Module:												
Base Vol:	117	1215	55	48	1513	205	293	135	187	121	178	38
Growth Adj:	1.00	1.00	1.00	1.00	1.00	1.00	1.00	1.00	1.00	1.00	1.00	1.00
Initial Bse:	117	1215	55	48	1513	205	293	135	187	121	178	38
Added Vol:	5	18	12	5	15	0	0	1	2	7	2	14
Committed P:	26	69	0	0	62	6	19	0	41	0	0	0
Initial Fut:	148	1302	67	53	1590	211	312	136	230	128	180	52
User Adj:	1.00	1.00	1.00	1.00	1.00	1.00	1.00	1.00	1.00	1.00	1.00	1.00
PHF Adj:	1.00	1.00	1.00	1.00	1.00	1.00	1.00	1.00	1.00	1.00	1.00	1.00
PHF Volume:	148	1302	67	53	1590	211	312	136	230	128	180	52
Reduct Vol:	0	0	0	0	0	0	0	0	0	0	0	0
Reduced Vol:	148	1302	67	53	1590	211	312	136	230	128	180	52
PCE Adj:	1.00	1.00	1.00	1.00	1.00	1.00	1.00	1.00	1.00	1.00	1.00	1.00
MLF Adj:	1.00	1.00	1.00	1.00	1.00	1.00	1.00	1.00	1.00	1.00	1.00	1.00
FinalVolume:	148	1302	67	53	1590	211	312	136	230	128	180	52
Saturation Flow Module:												
Sat/Lane:	1600	1600	1600	1600	1600	1600	1600	1600	1600	1600	1600	1600
Adjustment:	1.00	1.00	1.00	1.00	1.00	1.00	1.00	1.00	1.00	1.00	1.00	1.00
Lanes:	1.00	3.00	1.00	1.00	3.00	1.00	2.00	1.00	1.00	1.00	1.55	0.45
Final Sat.:	1600	4800	1600	1600	4800	1600	3200	1600	1600	1600	2483	717
Capacity Analysis Module:												
Vol/Sat:	0.09	0.27	0.04	0.03	0.33	0.13	0.10	0.09	0.14	0.08	0.07	0.07
Crit Moves:	****				****				****	****		

Newport Banning Ranch
Year 2016 Cumulative Conditions with Project
PM Peak Hour

Level Of Service Computation Report
ICU 1(Loss as Cycle Length %) Method (Future Volume Alternative)

Intersection #6 Orange St/W. Coast Hwy

Cycle (sec):	120	Critical Vol./Cap.(X):	0.784
Loss Time (sec):	0 (Y+R=4.0 sec)	Average Delay (sec/veh):	xxxxxx
Optimal Cycle:	86	Level Of Service:	C

Street Name:	Orange Street						W. Coast Highway					
Approach:	North Bound			South Bound			East Bound			West Bound		
Movement:	L - T - R			L - T - R			L - T - R			L - T - R		
Control:	Permitted			Permitted			Protected			Protected		
Rights:	Include			Include			Include			Include		
Min. Green:	0	0	0	0	0	0	0	0	0	0	0	0
Lanes:	0 1	0 0	1	0 1	0 0	1	1 0	2 1	0	1 0	3 0	1
Volume Module:												
Base Vol:	37	8	29	32	2	18	44	1170	19	53	2788	26
Growth Adj:	1.00	1.00	1.00	1.00	1.00	1.00	1.07	1.07	1.07	1.07	1.07	1.07
Initial Bse:	37	8	29	32	2	18	47	1254	20	57	2989	28
Added Vol:	0	0	0	0	0	6	6	388	0	0	289	0
Committed P:	0	0	0	0	0	0	0	56	0	0	95	0
Initial Fut:	37	8	29	32	2	24	53	1698	20	57	3373	28
User Adj:	1.00	1.00	1.00	1.00	1.00	1.00	1.00	1.00	1.00	1.00	1.00	1.00
PHF Adj:	1.00	1.00	1.00	1.00	1.00	1.00	1.00	1.00	1.00	1.00	1.00	1.00
PHF Volume:	37	8	29	32	2	24	53	1698	20	57	3373	28
Reduct Vol:	0	0	0	0	0	0	0	0	0	0	0	0
Reduced Vol:	37	8	29	32	2	24	53	1698	20	57	3373	28
PCE Adj:	1.00	1.00	1.00	1.00	1.00	1.00	1.00	1.00	1.00	1.00	1.00	1.00
MLF Adj:	1.00	1.00	1.00	1.00	1.00	1.00	1.00	1.00	1.00	1.00	1.00	1.00
FinalVolume:	37	8	29	32	2	24	53	1698	20	57	3373	28
Saturation Flow Module:												
Sat/Lane:	1600	1600	1600	1600	1600	1600	1600	1600	1600	1600	1600	1600
Adjustment:	1.00	1.00	1.00	1.00	1.00	1.00	1.00	1.00	1.00	1.00	1.00	1.00
Lanes:	0.82	0.18	1.00	0.94	0.06	1.00	1.00	2.96	0.04	1.00	3.00	1.00
Final Sat.:	1316	284	1600	1506	94	1600	1600	4743	57	1600	4800	1600
Capacity Analysis Module:												
Vol/Sat:	0.02	0.03	0.02	0.02	0.02	0.02	0.03	0.36	0.36	0.04	0.70	0.02
Crit Moves:		****		****			****				****	

Newport Banning Ranch
Year 2016 Cumulative Conditions with Project
PM Peak Hour

Level Of Service Computation Report
ICU 1(Loss as Cycle Length %) Method (Future Volume Alternative)

Intersection #7 Prospect St/W. Coast Hwy

Cycle (sec):	120	Critical Vol./Cap.(X):	0.761
Loss Time (sec):	0 (Y+R=4.0 sec)	Average Delay (sec/veh):	xxxxxx
Optimal Cycle:	78	Level Of Service:	C

Street Name:	Prospect Street						W. Coast Highway					
Approach:	North Bound			South Bound			East Bound			West Bound		
Movement:	L - T - R			L - T - R			L - T - R			L - T - R		
Control:	Permitted			Permitted			Protected			Protected		
Rights:	Include			Include			Include			Include		
Min. Green:	0	0	0	0	0	0	0	0	0	0	0	0
Lanes:	0 1	0 0	1	0 0	1!	0 0	1 0	2 1	0	1 0	2 1	0
Volume Module:												
Base Vol:	21	0	28	88	1	8	16	1279	10	23	2645	132
Growth Adj:	1.00	1.00	1.00	1.00	1.00	1.00	1.07	1.07	1.07	1.07	1.07	0.00
Initial Bse:	21	0	28	88	1	8	17	1371	11	25	2835	0
Added Vol:	0	0	0	7	0	3	3	384	0	0	286	6
Committed P:	0	0	0	0	0	0	0	56	0	0	95	0
Initial Fut:	21	0	28	95	1	11	20	1811	11	25	3216	6
User Adj:	1.00	1.00	1.00	1.00	1.00	1.00	1.00	1.00	1.00	1.00	1.00	1.00
PHF Adj:	1.00	1.00	1.00	1.00	1.00	1.00	1.00	1.00	1.00	1.00	1.00	1.00
PHF Volume:	21	0	28	95	1	11	20	1811	11	25	3216	6
Reduct Vol:	0	0	0	0	0	0	0	0	0	0	0	0
Reduced Vol:	21	0	28	95	1	11	20	1811	11	25	3216	6
PCE Adj:	1.00	1.00	1.00	1.00	1.00	1.00	1.00	1.00	1.00	1.00	1.00	1.00
MLF Adj:	1.00	1.00	1.00	1.00	1.00	1.00	1.00	1.00	1.00	1.00	1.00	1.00
FinalVolume:	21	0	28	95	1	11	20	1811	11	25	3216	6
Saturation Flow Module:												
Sat/Lane:	1600	1600	1600	1600	1600	1600	1600	1600	1600	1600	1600	1600
Adjustment:	1.00	1.00	1.00	1.00	1.00	1.00	1.00	1.00	1.00	1.00	1.00	1.00
Lanes:	1.00	0.00	1.00	0.89	0.01	0.10	1.00	2.98	0.02	1.00	2.99	0.01
Final Sat.:	1600	0	1600	1421	15	164	1600	4772	28	1600	4791	9
Capacity Analysis Module:												
Vol/Sat:	0.01	0.00	0.02	0.06	0.07	0.07	0.01	0.38	0.38	0.02	0.67	0.67
Crit Moves:			****	****			****				****	

Newport Banning Ranch
Year 2016 Cumulative Conditions with Project
PM Peak Hour

Level Of Service Computation Report
ICU 1(Loss as Cycle Length %) Method (Future Volume Alternative)

Intersection #8 W. Coast Hwy/Superior Ave

Cycle (sec):	120	Critical Vol./Cap.(X):	0.694
Loss Time (sec):	0 (Y+R=4.0 sec)	Average Delay (sec/veh):	xxxxxx
Optimal Cycle:	75	Level Of Service:	B

Street Name:	Superior Avenue						W. Coast Highway					
Approach:	North Bound			South Bound			East Bound			West Bound		
Movement:	L - T - R			L - T - R			L - T - R			L - T - R		
Control:	Split Phase			Split Phase			Protected			Protected		
Rights:	Include			Ovl			Include			Include		
Min. Green:	0	0	0	0	0	0	0	0	0	0	0	0
Lanes:	1 1 0	1 0		1 1 1	0 2		2 0 3	0 1		1 0 3	1 0	
Volume Module:												
Base Vol:	254	208	78	228	243	710	258	986	243	226	1854	162
Growth Adj:	1.00	1.00	1.00	1.00	1.00	1.00	1.07	1.07	1.07	1.07	1.07	1.07
Initial Bse:	254	208	78	228	243	710	277	1057	260	242	1987	174
Added Vol:	72	0	0	13	0	-326	-96	230	52	0	266	32
Committed P:	0	8	1	0	14	55	32	36	3	0	67	0
Initial Fut:	326	216	79	241	257	439	213	1323	315	242	2320	206
User Adj:	1.00	1.00	1.00	1.00	1.00	1.00	1.00	1.00	1.00	1.00	1.00	1.00
PHF Adj:	1.00	1.00	1.00	1.00	1.00	1.00	1.00	1.00	1.00	1.00	1.00	1.00
PHF Volume:	326	216	79	241	257	439	213	1323	315	242	2320	206
Reduct Vol:	0	0	0	0	0	0	0	0	0	0	0	0
Reduced Vol:	326	216	79	241	257	439	213	1323	315	242	2320	206
PCE Adj:	1.00	1.00	1.00	1.00	1.00	1.00	1.00	1.00	1.00	1.00	1.00	1.00
MLF Adj:	1.00	1.00	1.00	1.00	1.00	1.00	1.00	1.00	1.00	1.00	1.00	1.00
FinalVolume:	326	216	79	241	257	439	213	1323	315	242	2320	206
OvlAdjVol:						226						
Saturation Flow Module:												
Sat/Lane:	1600	1600	1600	1600	1600	1600	1600	1600	1600	1600	1600	1600
Adjustment:	1.00	1.00	1.00	1.00	1.00	1.00	1.00	1.00	1.00	1.00	1.00	1.00
Lanes:	1.58	1.04	0.38	1.45	1.55	2.00	2.00	3.00	1.00	1.00	3.67	0.33
Final Sat.:	2516	1671	612	2323	2477	3200	3200	4800	1600	1600	5879	521
Capacity Analysis Module:												
Vol/Sat:	0.13	0.13	0.13	0.10	0.10	0.14	0.07	0.28	0.20	0.15	0.39	0.39
OvlAdjV/S:						0.07						
Crit Moves:	****				****		****				****	

Newport Banning Ranch
Year 2016 Cumulative Conditions with Project
PM Peak Hour

Level Of Service Computation Report
ICU 1(Loss as Cycle Length %) Method (Future Volume Alternative)

Intersection #9 Newport Blvd/W. Coast Hwy

Cycle (sec):	120	Critical Vol./Cap.(X):	0.787
Loss Time (sec):	0 (Y+R=4.0 sec)	Average Delay (sec/veh):	xxxxxx
Optimal Cycle:	107	Level Of Service:	C

Street Name:	Newport Boulevard						W. Coast Highway					
Approach:	North Bound			South Bound			East Bound			West Bound		
Movement:	L - T - R			L - T - R			L - T - R			L - T - R		
Control:	Protected			Protected			Protected			Protected		
Rights:	Include			Include			Ignore			Ignore		
Min. Green:	0	0	0	0	0	0	0	0	0	0	0	0
Lanes:	0 0 0 0 0			2 0 0 0 1			0 0 2 0 1			0 0 3 0 1		
Volume Module:												
Base Vol:	0	0	0	586	0	393	0	1261	159	0	1823	487
Growth Adj:	1.00	1.00	1.00	1.00	1.00	1.00	1.00	1.07	1.07	1.00	1.07	1.07
Initial Bse:	0	0	0	586	0	393	0	1352	170	0	1954	522
Added Vol:	0	0	0	21	0	13	0	242	0	0	285	13
Committed P:	0	0	0	44	0	19	0	76	7	0	26	0
Initial Fut:	0	0	0	651	0	425	0	1670	177	0	2265	535
User Adj:	1.00	1.00	1.00	1.00	1.00	1.00	1.00	1.00	0.00	1.00	1.00	0.00
PHF Adj:	1.00	1.00	1.00	1.00	1.00	1.00	1.00	1.00	0.00	1.00	1.00	0.00
PHF Volume:	0	0	0	651	0	425	0	1670	0	0	2265	0
Reduct Vol:	0	0	0	0	0	0	0	0	0	0	0	0
Reduced Vol:	0	0	0	651	0	425	0	1670	0	0	2265	0
PCE Adj:	1.00	1.00	1.00	1.00	1.00	1.00	1.00	1.00	0.00	1.00	1.00	0.00
MLF Adj:	1.00	1.00	1.00	1.00	1.00	1.00	1.00	1.00	0.00	1.00	1.00	0.00
FinalVolume:	0	0	0	651	0	425	0	1670	0	0	2265	0
Saturation Flow Module:												
Sat/Lane:	1600	1600	1600	1600	1600	1600	1600	1600	1600	1600	1600	1600
Adjustment:	1.00	1.00	1.00	1.00	1.00	1.00	1.00	1.00	1.00	1.00	1.00	1.00
Lanes:	0.00	0.00	0.00	2.00	0.00	1.00	0.00	2.00	1.00	0.00	3.00	1.00
Final Sat.:	0	0	0	3200	0	1600	0	3200	1600	0	4800	1600
Capacity Analysis Module:												
Vol/Sat:	0.00	0.00	0.00	0.20	0.00	0.27	0.00	0.52	0.00	0.00	0.47	0.00
Crit Moves:						****		****		****		

Newport Banning Ranch
Year 2016 Cumulative Conditions with Project
PM Peak Hour

Level Of Service Computation Report
ICU 1(Loss as Cycle Length %) Method (Future Volume Alternative)

Intersection #10 Riverside Ave/W. Coast Hwy

Cycle (sec):	120	Critical Vol./Cap.(X):	0.854
Loss Time (sec):	0 (Y+R=4.0 sec)	Average Delay (sec/veh):	xxxxxx
Optimal Cycle:	127	Level Of Service:	D

Street Name:	Riverside Avenue						W. Coast Highway					
Approach:	North Bound			South Bound			East Bound			West Bound		
Movement:	L - T - R			L - T - R			L - T - R			L - T - R		
Control:	Permitted			Permitted			Protected			Protected		
Rights:	Include			Ovl			Include			Include		
Min. Green:	0	0	0	0	0	0	0	0	0	0	0	0
Lanes:	0 0	1! 0	0	0 1	0 0	1	1 0	1 1	0	1 0	3 0	1
Volume Module:												
Base Vol:	10	11	2	98	2	404	244	1373	5	11	2155	70
Growth Adj:	1.00	1.00	1.00	1.00	1.00	1.00	1.07	1.07	1.07	1.07	1.07	1.07
Initial Bse:	10	11	2	98	2	404	262	1472	5	12	2310	75
Added Vol:	0	0	0	0	0	44	31	239	0	0	275	0
Committed P:	0	0	0	2	0	0	0	138	0	0	139	3
Initial Fut:	10	11	2	100	2	448	293	1849	5	12	2724	78
User Adj:	1.00	1.00	1.00	1.00	1.00	1.00	1.00	1.00	1.00	1.00	1.00	1.00
PHF Adj:	1.00	1.00	1.00	1.00	1.00	1.00	1.00	1.00	1.00	1.00	1.00	1.00
PHF Volume:	10	11	2	100	2	448	293	1849	5	12	2724	78
Reduct Vol:	0	0	0	0	0	0	0	0	0	0	0	0
Reduced Vol:	10	11	2	100	2	448	293	1849	5	12	2724	78
PCE Adj:	1.00	1.00	1.00	1.00	1.00	1.00	1.00	1.00	1.00	1.00	1.00	1.00
MLF Adj:	1.00	1.00	1.00	1.00	1.00	1.00	1.00	1.00	1.00	1.00	1.00	1.00
FinalVolume:	10	11	2	100	2	448	293	1849	5	12	2724	78
OvlAdjVol:						155						
Saturation Flow Module:												
Sat/Lane:	1600	1600	1600	1600	1600	1600	1600	1600	1600	1600	1600	1600
Adjustment:	1.00	1.00	1.00	1.00	1.00	1.00	1.00	1.00	1.00	1.00	1.00	1.00
Lanes:	0.43	0.48	0.09	0.98	0.02	1.00	1.00	1.99	0.01	1.00	3.00	1.00
Final Sat.:	696	765	139	1569	31	1600	1600	3191	9	1600	4800	1600
Capacity Analysis Module:												
Vol/Sat:	0.01	0.01	0.01	0.06	0.06	0.28	0.18	0.58	0.58	0.01	0.57	0.05
OvlAdjV/S:						0.10						
Crit Moves:	****					****	****				****	

Newport Banning Ranch
Year 2016 Cumulative Conditions with Project
PM Peak Hour

Level Of Service Computation Report
ICU 1(Loss as Cycle Length %) Method (Future Volume Alternative)

Intersection #11 Tustin Ave/W. Coast Hwy

Cycle (sec):	120	Critical Vol./Cap.(X):	0.720
Loss Time (sec):	0 (Y+R=4.0 sec)	Average Delay (sec/veh):	xxxxxx
Optimal Cycle:	66	Level Of Service:	C

Street Name:	Tustin Avenue						W. Coast Highway					
Approach:	North Bound			South Bound			East Bound			West Bound		
Movement:	L - T - R			L - T - R			L - T - R			L - T - R		
Control:	Permitted			Permitted			Protected			Permitted		
Rights:	Include			Include			Include			Include		
Min. Green:	0	0	0	0	0	0	0	0	0	0	0	0
Lanes:	0 0 0 1 0			0 0 1! 0 0			1 0 1 1 0			0 0 3 0 1		
Volume Module:												
Base Vol:	0	1	2	55	0	27	94	1376	20	0	2230	52
Growth Adj:	1.00	1.00	1.00	1.00	1.00	1.00	1.07	1.07	1.07	1.07	1.07	1.07
Initial Bse:	0	1	2	55	0	27	101	1475	21	0	2391	56
Added Vol:	0	0	0	0	0	24	17	222	0	0	252	0
Committed P:	0	0	0	0	0	0	0	140	0	0	143	0
Initial Fut:	0	1	2	55	0	51	118	1837	21	0	2786	56
User Adj:	1.00	1.00	1.00	1.00	1.00	1.00	1.00	1.00	1.00	1.00	1.00	1.00
PHF Adj:	1.00	1.00	1.00	1.00	1.00	1.00	1.00	1.00	1.00	1.00	1.00	1.00
PHF Volume:	0	1	2	55	0	51	118	1837	21	0	2786	56
Reduct Vol:	0	0	0	0	0	0	0	0	0	0	0	0
Reduced Vol:	0	1	2	55	0	51	118	1837	21	0	2786	56
PCE Adj:	1.00	1.00	1.00	1.00	1.00	1.00	1.00	1.00	1.00	1.00	1.00	1.00
MLF Adj:	1.00	1.00	1.00	1.00	1.00	1.00	1.00	1.00	1.00	1.00	1.00	1.00
FinalVolume:	0	1	2	55	0	51	118	1837	21	0	2786	56
Saturation Flow Module:												
Sat/Lane:	1600	1600	1600	1600	1600	1600	1600	1600	1600	1600	1600	1600
Adjustment:	1.00	1.00	1.00	1.00	1.00	1.00	1.00	1.00	1.00	1.00	1.00	1.00
Lanes:	0.00	0.33	0.67	0.52	0.00	0.48	1.00	1.98	0.02	0.00	3.00	1.00
Final Sat.:	0	533	1067	830	0	770	1600	3163	37	0	4800	1600
Capacity Analysis Module:												
Vol/Sat:	0.00	0.00	0.00	0.03	0.00	0.07	0.07	0.58	0.58	0.00	0.58	0.03
Crit Moves:	****					****	****				****	

Newport Banning Ranch
Year 2016 Cumulative Conditions with Project
PM Peak Hour

Level Of Service Computation Report
ICU 1(Loss as Cycle Length %) Method (Future Volume Alternative)

Intersection #12 Dover Dr/W. Coast Hwy

Cycle (sec):	120	Critical Vol./Cap.(X):	0.859
Loss Time (sec):	0 (Y+R=4.0 sec)	Average Delay (sec/veh):	xxxxxx
Optimal Cycle:	162	Level Of Service:	D

Street Name:	Dover Drive									W. Coast Highway								
Approach:	North Bound					South Bound				East Bound					West Bound			
Movement:	L	-	T	-	R	L	-	T	-	R	L	-	T	-	R	L	-	T	-	R
Control:	Split Phase					Split Phase					Protected					Protected				
Rights:	Include					Include					Include					Ignore				
Min. Green:	0	0	0			0	0	0			0	0	0			0	0	0		
Lanes:	1	0	1	1	0	3	0	1	0	1	2	0	2	1	0	1	0	3	0	1
Volume Module:																				
Base Vol:	35	42	41	918		61	119				145	1270		25		50	2153		1021	
Growth Adj:	1.00	1.00	1.00	1.00		1.00	1.00				1.07	1.07		1.07		1.07	1.07		1.07	
Initial Bse:	35	42	41	918		61	119				155	1361		27		54	2308		1095	
Added Vol:	5	0	0	110		0	14				11	206		5		0	233		75	
Committed P:	0	0	0	3		0	23				34	132		0		0	127		12	
Initial Fut:	40	42	41	1031		61	156				200	1699		32		54	2668		1182	
User Adj:	1.00	1.00	1.00	1.00		1.00	1.00				1.00	1.00		1.00		1.00	1.00		0.00	
PHF Adj:	1.00	1.00	1.00	1.00		1.00	1.00				1.00	1.00		1.00		1.00	1.00		0.00	
PHF Volume:	40	42	41	1031		61	156				200	1699		32		54	2668		0	
Reduct Vol:	0	0	0	0		0	0				0	0		0		0	0		0	
Reduced Vol:	40	42	41	1031		61	156				200	1699		32		54	2668		0	
PCE Adj:	1.00	1.00	1.00	1.00		1.00	1.00				1.00	1.00		1.00		1.00	1.00		0.00	
MLF Adj:	1.00	1.00	1.00	1.00		1.00	1.00				1.00	1.00		1.00		1.00	1.00		0.00	
FinalVolume:	40	42	41	1031		61	156				200	1699		32		54	2668		0	
Saturation Flow Module:																				
Sat/Lane:	1600	1600	1600	1600		1600	1600				1600	1600		1600		1600	1600		1600	
Adjustment:	1.00	1.00	1.00	1.00		1.00	1.00				1.00	1.00		1.00		1.00	1.00		1.00	
Lanes:	1.00	1.01	0.99	3.00		1.00	1.00				2.00	2.94		0.06		1.00	3.00		1.00	
Final Sat.:	1600	1619	1581	4800		1600	1600				3200	4712		88		1600	4800		1600	
Capacity Analysis Module:																				
Vol/Sat:	0.03	0.03	0.03	0.21		0.04	0.10				0.06	0.36		0.36		0.03	0.56		0.00	
Crit Moves:			****	****							****						****			

Newport Banning Ranch
Year 2016 Cumulative Conditions with Project
PM Peak Hour

Level Of Service Computation Report
ICU 1(Loss as Cycle Length %) Method (Future Volume Alternative)

Intersection #13 Magnolia St/Hamilton Ave

Cycle (sec):	100	Critical Vol./Cap.(X):	0.660
Loss Time (sec):	5 (Y+R=4.0 sec)	Average Delay (sec/veh):	xxxxxx
Optimal Cycle:	33	Level Of Service:	B

Street Name:	Magnolia Street						Hamilton Avenue					
Approach:	North Bound			South Bound			East Bound			West Bound		
Movement:	L - T - R			L - T - R			L - T - R			L - T - R		
Control:	Prot+Permit			Prot+Permit			Permitted			Permitted		
Rights:	Include			Include			Include			Include		
Min. Green:	0	0	0	0	0	0	0	0	0	0	0	0
Lanes:	1 0 1	1 0		1 0 2	0 1		1 0 0	1 0		1 0 1	0 1	
Volume Module:												
Base Vol:	100	365	55	192	247	25	9	188	71	71	413	379
Growth Adj:	1.07	1.07	1.07	1.07	1.07	1.07	1.07	1.07	1.07	1.07	1.07	1.07
Initial Bse:	107	391	59	206	265	27	10	202	76	76	443	406
Added Vol:	52	74	24	18	112	32	18	52	71	38	66	15
Committed P:	4	6	0	0	5	0	0	0	2	0	0	0
Initial Fut:	163	471	83	224	382	59	28	254	149	114	509	421
User Adj:	1.00	1.00	1.00	1.00	1.00	1.00	1.00	1.00	1.00	1.00	1.00	1.00
PHF Adj:	1.00	1.00	1.00	1.00	1.00	1.00	1.00	1.00	1.00	1.00	1.00	1.00
PHF Volume:	163	471	83	224	382	59	28	254	149	114	509	421
Reduct Vol:	0	0	0	0	0	0	0	0	0	0	0	0
Reduced Vol:	163	471	83	224	382	59	28	254	149	114	509	421
PCE Adj:	1.00	1.00	1.00	1.00	1.00	1.00	1.00	1.00	1.00	1.00	1.00	1.00
MLF Adj:	1.00	1.00	1.00	1.00	1.00	1.00	1.00	1.00	1.00	1.00	1.00	1.00
FinalVolume:	163	471	83	224	382	59	28	254	149	114	509	421
Saturation Flow Module:												
Sat/Lane:	1600	1600	1600	1600	1600	1600	1600	1600	1600	1600	1600	1600
Adjustment:	1.06	1.06	1.06	1.06	1.06	1.06	1.06	1.06	1.06	1.06	1.06	1.06
Lanes:	1.00	1.70	0.30	1.00	2.00	1.00	1.00	0.63	0.37	1.00	1.00	1.00
Final Sat.:	1700	2891	509	1700	3400	1700	1700	1070	630	1700	1700	1700
Capacity Analysis Module:												
Vol/Sat:	0.10	0.16	0.16	0.13	0.11	0.03	0.02	0.24	0.24	0.07	0.30	0.25
Crit Moves:		****		****			****				****	

Newport Banning Ranch
Year 2016 Cumulative Conditions with Project
PM Peak Hour

Level Of Service Computation Report
ICU 1(Loss as Cycle Length %) Method (Future Volume Alternative)

Intersection #14 Bushard St/Hamilton Ave

Cycle (sec):	100	Critical Vol./Cap.(X):	0.597
Loss Time (sec):	5 (Y+R=4.0 sec)	Average Delay (sec/veh):	xxxxxx
Optimal Cycle:	29	Level Of Service:	A

Street Name:	Bushard Street						Hamilton Avenue					
Approach:	North Bound			South Bound			East Bound			West Bound		
Movement:	L - T - R			L - T - R			L - T - R			L - T - R		
Control:	Permitted			Permitted			Permitted			Permitted		
Rights:	Include			Include			Include			Include		
Min. Green:	0	0	0	0	0	0	0	0	0	0	0	0
Lanes:	1 0 1	1 0		1 0 1	1 0		1 0 1	1 0		1 0 1	1 0	
Volume Module:												
Base Vol:	55	265	43	117	143	39	26	355	43	44	779	251
Growth Adj:	1.07	1.07	1.07	1.07	1.07	1.07	1.07	1.07	1.07	1.07	1.07	1.07
Initial Bse:	59	284	46	125	153	42	28	381	46	47	835	269
Added Vol:	0	0	0	0	0	0	0	94	0	0	119	0
Committed P:	0	0	0	0	0	0	0	0	0	0	0	0
Initial Fut:	59	284	46	125	153	42	28	475	46	47	954	269
User Adj:	1.00	1.00	1.00	1.00	1.00	1.00	1.00	1.00	1.00	1.00	1.00	1.00
PHF Adj:	1.00	1.00	1.00	1.00	1.00	1.00	1.00	1.00	1.00	1.00	1.00	1.00
PHF Volume:	59	284	46	125	153	42	28	475	46	47	954	269
Reduct Vol:	0	0	0	0	0	0	0	0	0	0	0	0
Reduced Vol:	59	284	46	125	153	42	28	475	46	47	954	269
PCE Adj:	1.00	1.00	1.00	1.00	1.00	1.00	1.00	1.00	1.00	1.00	1.00	1.00
MLF Adj:	1.00	1.00	1.00	1.00	1.00	1.00	1.00	1.00	1.00	1.00	1.00	1.00
FinalVolume:	59	284	46	125	153	42	28	475	46	47	954	269
Saturation Flow Module:												
Sat/Lane:	1600	1600	1600	1600	1600	1600	1600	1600	1600	1600	1600	1600
Adjustment:	1.06	1.06	1.06	1.06	1.06	1.06	1.06	1.06	1.06	1.06	1.06	1.06
Lanes:	1.00	1.72	0.28	1.00	1.57	0.43	1.00	1.82	0.18	1.00	1.56	0.44
Final Sat.:	1700	2925	475	1700	2671	729	1700	3099	301	1700	2652	748
Capacity Analysis Module:												
Vol/Sat:	0.03	0.10	0.10	0.07	0.06	0.06	0.02	0.15	0.15	0.03	0.36	0.36
Crit Moves:		****		****			****				****	

Newport Banning Ranch
Year 2016 Cumulative Conditions with Project
PM Peak Hour

Level Of Service Computation Report
ICU 1(Loss as Cycle Length %) Method (Future Volume Alternative)

Intersection #15 Brookhurst St/Hamilton Ave (Victoria St)

Cycle (sec):	100	Critical Vol./Cap.(X):	0.716
Loss Time (sec):	5 (Y+R=4.0 sec)	Average Delay (sec/veh):	xxxxxx
Optimal Cycle:	39	Level Of Service:	C

Street Name:	Brookhurst						Hamilton Avenue (Victoria Street)					
Approach:	North Bound			South Bound			East Bound			West Bound		
Movement:	L - T - R			L - T - R			L - T - R			L - T - R		
Control:	Protected			Protected			Prot+Permit			Prot+Permit		
Rights:	Include			Include			Include			Include		
Min. Green:	0	0	0	0	0	0	0	0	0	0	0	0
Lanes:	1 0 3 0 1			2 0 2 1 0			1 0 1 1 0			1 0 2 0 1		
Volume Module:												
Base Vol:	117	581	192	397	335	106	113	353	67	277	943	489
Growth Adj:	1.07	1.07	1.07	1.07	1.07	1.07	1.07	1.07	1.07	1.07	1.07	1.07
Initial Bse:	125	623	206	426	359	114	121	378	72	297	1011	524
Added Vol:	27	42	4	11	58	70	42	20	33	4	22	4
Committed P:	0	5	0	0	0	0	0	0	0	0	0	0
Initial Fut:	152	670	210	437	417	184	163	398	105	301	1033	528
User Adj:	1.00	1.00	1.00	1.00	1.00	1.00	1.00	1.00	1.00	1.00	1.00	1.00
PHF Adj:	1.00	1.00	1.00	1.00	1.00	1.00	1.00	1.00	1.00	1.00	1.00	1.00
PHF Volume:	152	670	210	437	417	184	163	398	105	301	1033	528
Reduct Vol:	0	0	0	0	0	0	0	0	0	0	0	0
Reduced Vol:	152	670	210	437	417	184	163	398	105	301	1033	528
PCE Adj:	1.00	1.00	1.00	1.00	1.00	1.00	1.00	1.00	1.00	1.00	1.00	1.00
MLF Adj:	1.00	1.00	1.00	1.00	1.00	1.00	1.00	1.00	1.00	1.00	1.00	1.00
FinalVolume:	152	670	210	437	417	184	163	398	105	301	1033	528
Saturation Flow Module:												
Sat/Lane:	1600	1600	1600	1600	1600	1600	1600	1600	1600	1600	1600	1600
Adjustment:	1.06	1.06	1.06	1.06	1.06	1.06	1.06	1.06	1.06	1.06	1.06	1.06
Lanes:	1.00	3.00	1.00	2.00	2.08	0.92	1.00	1.58	0.42	1.00	2.00	1.00
Final Sat.:	1700	5100	1700	3400	3541	1559	1700	2692	708	1700	3400	1700
Capacity Analysis Module:												
Vol/Sat:	0.09	0.13	0.12	0.13	0.12	0.12	0.10	0.15	0.15	0.18	0.30	0.31
Crit Moves:		****		****			****					****

Newport Banning Ranch
Year 2016 Cumulative Conditions with Project
PM Peak Hour

Level Of Service Computation Report
ICU 1(Loss as Cycle Length %) Method (Future Volume Alternative)

Intersection #16 Magnolia St/Banning Ave

Cycle (sec):	100	Critical Vol./Cap.(X):	0.340
Loss Time (sec):	5 (Y+R=4.0 sec)	Average Delay (sec/veh):	xxxxxx
Optimal Cycle:	18	Level Of Service:	A

Street Name:	Magnolia Street						Banning Avenue					
Approach:	North Bound			South Bound			East Bound			West Bound		
Movement:	L - T - R			L - T - R			L - T - R			L - T - R		
Control:	Protected			Protected			Split Phase			Split Phase		
Rights:	Include			Include			Include			Include		
Min. Green:	0	0	0	0	0	0	0	0	0	0	0	0
Lanes:	0 0 1	1 0		1 0 2	0 0		0 0 0	0 0		2 0 0	0 1	
Volume Module:												
Base Vol:	0	435	60	76	300	0	0	0	0	23	0	56
Growth Adj:	1.07	1.07	1.07	1.07	1.07	1.07	1.07	1.07	1.07	1.07	1.07	1.07
Initial Bse:	0	466	64	81	322	0	0	0	0	25	0	60
Added Vol:	0	97	4	13	105	0	0	0	0	4	0	13
Committed P:	0	18	0	0	11	0	0	0	0	0	0	0
Initial Fut:	0	581	68	94	438	0	0	0	0	29	0	73
User Adj:	1.00	1.00	1.00	1.00	1.00	1.00	1.00	1.00	1.00	1.00	1.00	1.00
PHF Adj:	1.00	1.00	1.00	1.00	1.00	1.00	1.00	1.00	1.00	1.00	1.00	1.00
PHF Volume:	0	581	68	94	438	0	0	0	0	29	0	73
Reduct Vol:	0	0	0	0	0	0	0	0	0	0	0	0
Reduced Vol:	0	581	68	94	438	0	0	0	0	29	0	73
PCE Adj:	1.00	1.00	1.00	1.00	1.00	1.00	1.00	1.00	1.00	1.00	1.00	1.00
MLF Adj:	1.00	1.00	1.00	1.00	1.00	1.00	1.00	1.00	1.00	1.00	1.00	1.00
FinalVolume:	0	581	68	94	438	0	0	0	0	29	0	73
Saturation Flow Module:												
Sat/Lane:	1600	1600	1600	1600	1600	1600	1600	1600	1600	1600	1600	1600
Adjustment:	1.06	1.06	1.06	1.06	1.06	1.06	1.06	1.06	1.06	1.06	1.06	1.06
Lanes:	0.00	1.79	0.21	1.00	2.00	0.00	0.00	0.00	0.00	2.00	0.00	1.00
Final Sat.:	0	3042	358	1700	3400	0	0	0	0	3400	0	1700
Capacity Analysis Module:												
Vol/Sat:	0.00	0.19	0.19	0.06	0.13	0.00	0.00	0.00	0.00	0.01	0.00	0.04
Crit Moves:		****		****								****

Newport Banning Ranch
Year 2016 Cumulative Conditions with Project
PM Peak Hour

Level Of Service Computation Report
2000 HCM 4-Way Stop Method (Future Volume Alternative)

Intersection #17 Bushard St/Banning Ave

Cycle (sec):	100	Critical Vol./Cap.(X):	0.204
Loss Time (sec):	5 (Y+R=4.0 sec)	Average Delay (sec/veh):	9.4
Optimal Cycle:	0	Level Of Service:	A

Street Name:	Bushard Street						Banning Avenue					
Approach:	North Bound			South Bound			East Bound			West Bound		
Movement:	L - T - R			L - T - R			L - T - R			L - T - R		
Control:	Stop Sign			Stop Sign			Stop Sign			Stop Sign		
Rights:	Include			Include			Include			Include		
Min. Green:	0	0	0	0	0	0	0	0	0	0	0	0
Lanes:	1 0 1	1 0		1 0 1	1 0		1 0 0	1 0		1 0 0	1 0	
Volume Module:												
Base Vol:	28	213	23	12	116	38	25	52	10	24	50	21
Growth Adj:	1.07	1.07	1.07	1.07	1.07	1.07	1.07	1.07	1.07	1.07	1.07	1.07
Initial Bse:	30	228	25	13	124	41	27	56	11	26	54	23
Added Vol:	7	0	0	0	0	0	0	10	8	0	9	0
Committed P:	0	3	0	0	2	0	0	0	0	0	0	0
Initial Fut:	37	231	25	13	126	41	27	66	19	26	63	23
User Adj:	1.00	1.00	1.00	1.00	1.00	1.00	1.00	1.00	1.00	1.00	1.00	1.00
PHF Adj:	1.00	1.00	1.00	1.00	1.00	1.00	1.00	1.00	1.00	1.00	1.00	1.00
PHF Volume:	37	231	25	13	126	41	27	66	19	26	63	23
Reduct Vol:	0	0	0	0	0	0	0	0	0	0	0	0
Reduced Vol:	37	231	25	13	126	41	27	66	19	26	63	23
PCE Adj:	1.00	1.00	1.00	1.00	1.00	1.00	1.00	1.00	1.00	1.00	1.00	1.00
MLF Adj:	1.00	1.00	1.00	1.00	1.00	1.00	1.00	1.00	1.00	1.00	1.00	1.00
FinalVolume:	37	231	25	13	126	41	27	66	19	26	63	23
Saturation Flow Module:												
Adjustment:	1.00	1.00	1.00	1.00	1.00	1.00	1.00	1.00	1.00	1.00	1.00	1.00
Lanes:	1.00	1.81	0.19	1.00	1.51	0.49	1.00	0.78	0.22	1.00	0.74	0.26
Final Sat.:	569	1132	122	544	910	304	538	464	132	538	441	159
Capacity Analysis Module:												
Vol/Sat:	0.07	0.20	0.20	0.02	0.14	0.13	0.05	0.14	0.14	0.05	0.14	0.14
Crit Moves:		****			****				****		****	
Delay/Veh:	9.2	9.6	9.5	9.2	9.3	9.0	9.3	9.2	9.2	9.3	9.2	9.2
Delay Adj:	1.00	1.00	1.00	1.00	1.00	1.00	1.00	1.00	1.00	1.00	1.00	1.00
AdjDel/Veh:	9.2	9.6	9.5	9.2	9.3	9.0	9.3	9.2	9.2	9.3	9.2	9.2
LOS by Move:	A	A	A	A	A	A	A	A	A	A	A	A
ApproachDel:		9.5			9.2			9.3			9.2	
Delay Adj:		1.00			1.00			1.00			1.00	
ApprAdjDel:		9.5			9.2			9.3			9.2	
LOS by Appr:		A			A			A			A	
AllWayAvgQ:	0.1	0.2	0.2	0.0	0.1	0.1	0.0	0.1	0.1	0.0	0.1	0.1

Newport Banning Ranch
Year 2016 Cumulative Conditions with Project
PM Peak Hour

Note: Queue reported is the number of cars per lane.

Newport Banning Ranch
Year 2016 Cumulative Conditions with Project
PM Peak Hour

Level Of Service Computation Report
ICU 1(Loss as Cycle Length %) Method (Future Volume Alternative)

Intersection #18 Brookhurst St/Banning Ave

Cycle (sec):	100	Critical Vol./Cap.(X):	0.270
Loss Time (sec):	5 (Y+R=4.0 sec)	Average Delay (sec/veh):	xxxxxx
Optimal Cycle:	17	Level Of Service:	A

Street Name:	Brookhurst Street						Banning Avenue					
Approach:	North Bound			South Bound			East Bound			West Bound		
Movement:	L - T - R			L - T - R			L - T - R			L - T - R		
Control:	Protected			Protected			Split Phase			Split Phase		
Rights:	Include			Include			Include			Include		
Min. Green:	0	0	0	0	0	0	0	0	0	0	0	0
Lanes:	1 0 3 0 0			0 0 2 1 0			1 0 0 0 1			0 0 0 0 0		
Volume Module:												
Base Vol:	12	769	0	0	509	100	61	0	7	0	0	0
Growth Adj:	1.07	1.07	1.07	1.07	1.07	1.07	1.07	1.07	1.07	1.07	1.07	1.07
Initial Bse:	13	824	0	0	546	107	65	0	8	0	0	0
Added Vol:	0	63	0	0	85	9	10	0	0	0	0	0
Committed P:	0	10	0	0	4	0	0	0	0	0	0	0
Initial Fut:	13	897	0	0	635	116	75	0	8	0	0	0
User Adj:	1.00	1.00	1.00	1.00	1.00	1.00	1.00	1.00	1.00	1.00	1.00	1.00
PHF Adj:	1.00	1.00	1.00	1.00	1.00	1.00	1.00	1.00	1.00	1.00	1.00	1.00
PHF Volume:	13	897	0	0	635	116	75	0	8	0	0	0
Reduct Vol:	0	0	0	0	0	0	0	0	0	0	0	0
Reduced Vol:	13	897	0	0	635	116	75	0	8	0	0	0
PCE Adj:	1.00	1.00	1.00	1.00	1.00	1.00	1.00	1.00	1.00	1.00	1.00	1.00
MLF Adj:	1.00	1.00	1.00	1.00	1.00	1.00	1.00	1.00	1.00	1.00	1.00	1.00
FinalVolume:	13	897	0	0	635	116	75	0	8	0	0	0
Saturation Flow Module:												
Sat/Lane:	1600	1600	1600	1600	1600	1600	1600	1600	1600	1600	1600	1600
Adjustment:	1.06	1.06	1.06	1.06	1.06	1.06	1.06	1.06	1.06	1.06	1.06	1.06
Lanes:	1.00	3.00	0.00	0.00	2.54	0.46	1.00	0.00	1.00	0.00	0.00	0.00
Final Sat.:	1700	5100	0	0	4311	789	1700	0	1700	0	0	0
Capacity Analysis Module:												
Vol/Sat:	0.01	0.18	0.00	0.00	0.15	0.15	0.04	0.00	0.00	0.00	0.00	0.00
Crit Moves:		****		****			****					

Newport Banning Ranch
Year 2016 Cumulative Conditions with Project
PM Peak Hour

Level Of Service Computation Report
ICU 1(Loss as Cycle Length %) Method (Future Volume Alternative)

Intersection #19 Magnolia St/PCH

Cycle (sec):	120	Critical Vol./Cap.(X):	0.697
Loss Time (sec):	6 (Y+R=4.0 sec)	Average Delay (sec/veh):	xxxxxx
Optimal Cycle:	41	Level Of Service:	B

Street Name:	Magnolia Street						Pacific Coast Highway					
Approach:	North Bound			South Bound			East Bound			West Bound		
Movement:	L - T - R			L - T - R			L - T - R			L - T - R		
Control:	Split Phase			Split Phase			Protected			Protected		
Rights:	Include			Include			Include			Include		
Min. Green:	0	0	0	0	0	0	0	0	0	0	0	0
Lanes:	1 0 0 1 0			1 1 0 0 1			1 0 3 0 1			1 0 3 0 1		
Volume Module:												
Base Vol:	10	22	15	101	30	152	137	885	17	30	1706	295
Growth Adj:	1.07	1.07	1.07	1.07	1.07	1.07	1.07	1.07	1.07	1.07	1.07	1.07
Initial Bse:	11	24	16	108	32	163	147	949	18	32	1829	316
Added Vol:	0	0	0	79	0	30	37	229	0	0	170	64
Committed P:	0	0	0	11	0	0	0	31	0	0	53	18
Initial Fut:	11	24	16	198	32	193	184	1209	18	32	2052	398
User Adj:	1.00	1.00	1.00	1.00	1.00	1.00	1.00	1.00	1.00	1.00	1.00	1.00
PHF Adj:	1.00	1.00	1.00	1.00	1.00	1.00	1.00	1.00	1.00	1.00	1.00	1.00
PHF Volume:	11	24	16	198	32	193	184	1209	18	32	2052	398
Reduct Vol:	0	0	0	0	0	0	0	0	0	0	0	0
Reduced Vol:	11	24	16	198	32	193	184	1209	18	32	2052	398
PCE Adj:	1.00	1.00	1.00	1.00	1.00	1.00	1.00	1.00	1.00	1.00	1.00	1.00
MLF Adj:	1.00	1.00	1.00	1.00	1.00	1.00	1.00	1.00	1.00	1.00	1.00	1.00
FinalVolume:	11	24	16	198	32	193	184	1209	18	32	2052	398
Saturation Flow Module:												
Sat/Lane:	1600	1600	1600	1600	1600	1600	1600	1600	1600	1600	1600	1600
Adjustment:	1.06	1.06	1.06	1.06	1.06	1.06	1.06	1.06	1.06	1.06	1.06	1.06
Lanes:	1.00	0.59	0.41	1.72	0.28	1.00	1.00	3.00	1.00	1.00	3.00	1.00
Final Sat.:	1700	1011	689	2925	475	1700	1700	5100	1700	1700	5100	1700
Capacity Analysis Module:												
Vol/Sat:	0.01	0.02	0.02	0.07	0.07	0.11	0.11	0.24	0.01	0.02	0.40	0.23
Crit Moves:		****				****	****				****	

Newport Banning Ranch
Year 2016 Cumulative Conditions with Project
PM Peak Hour

Level Of Service Computation Report
ICU 1(Loss as Cycle Length %) Method (Future Volume Alternative)

Intersection #20 Brookhurst St/Bushard St

Cycle (sec):	100	Critical Vol./Cap.(X):	0.371
Loss Time (sec):	5 (Y+R=4.0 sec)	Average Delay (sec/veh):	xxxxxx
Optimal Cycle:	19	Level Of Service:	A

Street Name:	Brookhurst Street									Bushard Street								
Approach:	North Bound			South Bound			East Bound			West Bound		
Movement:	L - T - R			L - T - R			L - T - R			L - T - R		
Control:	Protected			Protected			Permitted			Permitted		
Rights:	Include			Include			Include			Include		
Min. Green:	0	0	0	0	0	0	0	0	0	0	0	0
Lanes:	1 0 2	1 0		1 0 3	0 1		1 0 0	0 1		0 0 1!	0 0	
Volume Module:												
Base Vol:	222	662	0	0	430	22	13	0	92	0	0	0
Growth Adj:	1.07	1.07	1.07	1.07	1.07	1.07	1.07	1.07	1.07	1.07	1.07	1.07
Initial Bse:	238	710	0	0	461	24	14	0	99	0	0	0
Added Vol:	6	63	0	0	85	0	0	0	8	0	0	0
Committed P:	6	18	0	0	8	0	0	0	5	0	0	0
Initial Fut:	250	791	0	0	554	24	14	0	112	0	0	0
User Adj:	1.00	1.00	1.00	1.00	1.00	1.00	1.00	1.00	1.00	1.00	1.00	1.00
PHF Adj:	1.00	1.00	1.00	1.00	1.00	1.00	1.00	1.00	1.00	1.00	1.00	1.00
PHF Volume:	250	791	0	0	554	24	14	0	112	0	0	0
Reduct Vol:	0	0	0	0	0	0	0	0	0	0	0	0
Reduced Vol:	250	791	0	0	554	24	14	0	112	0	0	0
PCE Adj:	1.00	1.00	1.00	1.00	1.00	1.00	1.00	1.00	1.00	1.00	1.00	1.00
MLF Adj:	1.00	1.00	1.00	1.00	1.00	1.00	1.00	1.00	1.00	1.00	1.00	1.00
FinalVolume:	250	791	0	0	554	24	14	0	112	0	0	0
Saturation Flow Module:												
Sat/Lane:	1600	1600	1600	1600	1600	1600	1600	1600	1600	1600	1600	1600
Adjustment:	1.06	1.06	1.06	1.06	1.06	1.06	1.06	1.06	1.06	1.06	1.06	1.06
Lanes:	1.00	3.00	0.00	1.00	3.00	1.00	1.00	0.00	1.00	0.00	1.00	0.00
Final Sat.:	1700	5100	0	1700	5100	1700	1700	0	1700	0	1700	0
Capacity Analysis Module:												
Vol/Sat:	0.15	0.16	0.00	0.00	0.11	0.01	0.01	0.00	0.07	0.00	0.00	0.00
Crit Moves:	****				****				****			

Newport Banning Ranch
Year 2016 Cumulative Conditions with Project
PM Peak Hour

Level Of Service Computation Report
ICU 1(Loss as Cycle Length %) Method (Future Volume Alternative)

Intersection #21 Brookhurst St/PCH

Cycle (sec):	120	Critical Vol./Cap.(X):	0.777
Loss Time (sec):	6 (Y+R=4.0 sec)	Average Delay (sec/veh):	xxxxxx
Optimal Cycle:	53	Level Of Service:	C

Street Name:	Brookhurst Street						Pacific Coast HIghway					
Approach:	North Bound			South Bound			East Bound			West Bound		
Movement:	L - T - R			L - T - R			L - T - R			L - T - R		
Control:	Split Phase			Split Phase			Protected			Protected		
Rights:	Include			Include			Include			Ovl		
Min. Green:	0	0	0	0	0	0	0	0	0	0	0	0
Lanes:	1 0 0 1 0			2 0 1 0 1			1 0 3 0 1			1 0 3 0 1		
Volume Module:												
Base Vol:	8	23	17	324	6	179	182	797	2	13	1871	757
Growth Adj:	1.07	1.07	1.07	1.07	1.07	1.07	1.07	1.07	1.07	1.07	1.07	1.07
Initial Bse:	9	25	18	347	6	192	195	854	2	14	2006	812
Added Vol:	0	0	0	90	0	4	4	304	0	0	230	65
Committed P:	0	0	0	14	0	0	0	42	0	0	71	24
Initial Fut:	9	25	18	451	6	196	199	1200	2	14	2307	901
User Adj:	1.00	1.00	1.00	1.00	1.00	1.00	1.00	1.00	1.00	1.00	1.00	1.00
PHF Adj:	1.00	1.00	1.00	1.00	1.00	1.00	1.00	1.00	1.00	1.00	1.00	1.00
PHF Volume:	9	25	18	451	6	196	199	1200	2	14	2307	901
Reduct Vol:	0	0	0	0	0	0	0	0	0	0	0	0
Reduced Vol:	9	25	18	451	6	196	199	1200	2	14	2307	901
PCE Adj:	1.00	1.00	1.00	1.00	1.00	1.00	1.00	1.00	1.00	1.00	1.00	1.00
MLF Adj:	1.00	1.00	1.00	1.00	1.00	1.00	1.00	1.00	1.00	1.00	1.00	1.00
FinalVolume:	9	25	18	451	6	196	199	1200	2	14	2307	901
OvlAdjVol:												675
Saturation Flow Module:												
Sat/Lane:	1600	1600	1600	1600	1600	1600	1600	1600	1600	1600	1600	1600
Adjustment:	1.06	1.06	1.06	1.06	1.06	1.06	1.06	1.06	1.06	1.06	1.06	1.06
Lanes:	1.00	0.57	0.43	2.00	1.00	1.00	1.00	3.00	1.00	1.00	3.00	1.00
Final Sat.:	1700	978	723	3400	1700	1700	1700	5100	1700	1700	5100	1700
Capacity Analysis Module:												
Vol/Sat:	0.01	0.03	0.03	0.13	0.00	0.12	0.12	0.24	0.00	0.01	0.45	0.53
OvlAdjV/S:												0.40
Crit Moves:			****	****			****				****	

Newport Banning Ranch
Year 2016 Cumulative Conditions with Project
PM Peak Hour

Level Of Service Computation Report
ICU 1(Loss as Cycle Length %) Method (Future Volume Alternative)

Intersection #22 Placentia Ave/Victoria St

Cycle (sec):	100	Critical Vol./Cap.(X):	0.878
Loss Time (sec):	0 (Y+R=4.0 sec)	Average Delay (sec/veh):	xxxxxx
Optimal Cycle:	180	Level Of Service:	D

Street Name:	Placentia Avenue						Victoria Street					
Approach:	North Bound			South Bound			East Bound			West Bound		
Movement:	L - T - R			L - T - R			L - T - R			L - T - R		
Control:	Protected			Protected			Protected			Protected		
Rights:	Include			Include			Ovl			Include		
Min. Green:	0	0	0	0	0	0	0	0	0	0	0	0
Lanes:	2 0 2	0 1		1 0 2	0 1		1 0 2	0 1		1 0 2	0 1	
Volume Module:												
Base Vol:	520	674	157	103	490	152	71	587	306	166	1376	87
Growth Adj:	1.07	1.07	1.07	1.07	1.07	1.07	1.07	1.07	1.07	1.07	1.07	1.07
Initial Bse:	557	723	168	110	525	163	76	629	328	178	1475	93
Added Vol:	4	46	48	0	69	0	0	27	11	111	27	0
Committed P:	0	0	0	0	0	0	0	0	0	0	0	0
Initial Fut:	561	769	216	110	594	163	76	656	339	289	1502	93
User Adj:	1.00	1.00	1.00	1.00	1.00	1.00	1.00	1.00	1.00	1.00	1.00	1.00
PHF Adj:	1.00	1.00	1.00	1.00	1.00	1.00	1.00	1.00	1.00	1.00	1.00	1.00
PHF Volume:	561	769	216	110	594	163	76	656	339	289	1502	93
Reduct Vol:	0	0	0	0	0	0	0	0	0	0	0	0
Reduced Vol:	561	769	216	110	594	163	76	656	339	289	1502	93
PCE Adj:	1.00	1.00	1.00	1.00	1.00	1.00	1.00	1.00	1.00	1.00	1.00	1.00
MLF Adj:	1.00	1.00	1.00	1.00	1.00	1.00	1.00	1.00	1.00	1.00	1.00	1.00
FinalVolume:	561	769	216	110	594	163	76	656	339	289	1502	93
OvlAdjVol:									58			
Saturation Flow Module:												
Sat/Lane:	1600	1600	1600	1600	1600	1600	1600	1600	1600	1600	1600	1600
Adjustment:	1.00	1.00	1.00	1.00	1.00	1.00	1.00	1.00	1.00	1.00	1.00	1.00
Lanes:	2.00	2.00	1.00	1.00	2.00	1.00	1.00	2.00	1.00	1.00	2.00	1.00
Final Sat.:	3200	3200	1600	1600	3200	1600	1600	3200	1600	1600	3200	1600
Capacity Analysis Module:												
Vol/Sat:	0.18	0.24	0.14	0.07	0.19	0.10	0.05	0.21	0.21	0.18	0.47	0.06
OvlAdjV/S:									0.04			
Crit Moves:	****				****		****				****	

Newport Banning Ranch
Year 2016 Cumulative Conditions with Project
PM Peak Hour

Level Of Service Computation Report
ICU 1(Loss as Cycle Length %) Method (Future Volume Alternative)

Intersection #23 Pomona Ave/Victoria St

Cycle (sec):	100	Critical Vol./Cap.(X):	0.757
Loss Time (sec):	0 (Y+R=4.0 sec)	Average Delay (sec/veh):	xxxxxx
Optimal Cycle:	59	Level Of Service:	C

Street Name:	Pomona Avenue						Victoria Street					
Approach:	North Bound			South Bound			East Bound			West Bound		
Movement:	L - T - R			L - T - R			L - T - R			L - T - R		
Control:	Permitted			Permitted			Permitted			Permitted		
Rights:	Include			Include			Include			Include		
Min. Green:	0	0	0	0	0	0	0	0	0	0	0	0
Lanes:	1 0 0	1 0		1 0 0	1 0		1 0 2	0 1		1 0 2	0 1	
Volume Module:												
Base Vol:	50	138	119	20	145	28	21	806	79	118	1526	29
Growth Adj:	1.07	1.07	1.07	1.07	1.07	1.07	1.07	1.07	1.07	1.07	1.07	1.07
Initial Bse:	54	148	128	21	155	30	23	864	85	126	1636	31
Added Vol:	0	0	5	0	0	0	0	74	1	7	137	0
Committed P:	0	0	0	0	0	0	0	0	0	0	0	0
Initial Fut:	54	148	133	21	155	30	23	938	86	133	1773	31
User Adj:	1.00	1.00	1.00	1.00	1.00	1.00	1.00	1.00	1.00	1.00	1.00	1.00
PHF Adj:	1.00	1.00	1.00	1.00	1.00	1.00	1.00	1.00	1.00	1.00	1.00	1.00
PHF Volume:	54	148	133	21	155	30	23	938	86	133	1773	31
Reduct Vol:	0	0	0	0	0	0	0	0	0	0	0	0
Reduced Vol:	54	148	133	21	155	30	23	938	86	133	1773	31
PCE Adj:	1.00	1.00	1.00	1.00	1.00	1.00	1.00	1.00	1.00	1.00	1.00	1.00
MLF Adj:	1.00	1.00	1.00	1.00	1.00	1.00	1.00	1.00	1.00	1.00	1.00	1.00
FinalVolume:	54	148	133	21	155	30	23	938	86	133	1773	31
Saturation Flow Module:												
Sat/Lane:	1600	1600	1600	1600	1600	1600	1600	1600	1600	1600	1600	1600
Adjustment:	1.00	1.00	1.00	1.00	1.00	1.00	1.00	1.00	1.00	1.00	1.00	1.00
Lanes:	1.00	0.53	0.47	1.00	0.84	0.16	1.00	2.00	1.00	1.00	2.00	1.00
Final Sat.:	1600	844	756	1600	1341	259	1600	3200	1600	1600	3200	1600
Capacity Analysis Module:												
Vol/Sat:	0.03	0.18	0.18	0.01	0.12	0.12	0.01	0.29	0.05	0.08	0.55	0.02
Crit Moves:		****		****			****				****	

Newport Banning Ranch
Year 2016 Cumulative Conditions with Project
PM Peak Hour

Level Of Service Computation Report
ICU 1(Loss as Cycle Length %) Method (Future Volume Alternative)

Intersection #24 Harbor Blvd/Victoria St

Cycle (sec):	100	Critical Vol./Cap.(X):	0.897
Loss Time (sec):	0 (Y+R=4.0 sec)	Average Delay (sec/veh):	xxxxxx
Optimal Cycle:	180	Level Of Service:	D

Street Name:	Harbor Boulevard						Victoria Street					
Approach:	North Bound			South Bound			East Bound			West Bound		
Movement:	L - T - R			L - T - R			L - T - R			L - T - R		
Control:	Protected			Protected			Protected			Protected		
Rights:	Include			Ovl			Include			Include		
Min. Green:	0	0	0	0	0	0	0	0	0	0	0	0
Lanes:	1 0 3 0 1			1 0 3 0 1			2 0 1 1 0			2 0 2 0 1		
Volume Module:												
Base Vol:	118	1081	124	142	1116	294	269	639	80	121	1212	159
Growth Adj:	1.07	1.07	1.07	1.07	1.07	1.07	1.07	1.07	1.07	1.07	1.07	1.07
Initial Bse:	126	1159	133	152	1196	315	288	685	86	130	1299	170
Added Vol:	3	100	16	6	139	19	10	65	5	27	122	3
Committed P:	0	0	0	0	0	0	0	0	0	0	0	0
Initial Fut:	129	1259	149	158	1335	334	298	750	91	157	1421	173
User Adj:	1.00	1.00	1.00	1.00	1.00	1.00	1.00	1.00	1.00	1.00	1.00	1.00
PHF Adj:	1.00	1.00	1.00	1.00	1.00	1.00	1.00	1.00	1.00	1.00	1.00	1.00
PHF Volume:	129	1259	149	158	1335	334	298	750	91	157	1421	173
Reduct Vol:	0	0	0	0	0	0	0	0	0	0	0	0
Reduced Vol:	129	1259	149	158	1335	334	298	750	91	157	1421	173
PCE Adj:	1.00	1.00	1.00	1.00	1.00	1.00	1.00	1.00	1.00	1.00	1.00	1.00
MLF Adj:	1.00	1.00	1.00	1.00	1.00	1.00	1.00	1.00	1.00	1.00	1.00	1.00
FinalVolume:	129	1259	149	158	1335	334	298	750	91	157	1421	173
OvlAdjVol:						185						
Saturation Flow Module:												
Sat/Lane:	1600	1600	1600	1600	1600	1600	1600	1600	1600	1600	1600	1600
Adjustment:	1.00	1.00	1.00	1.00	1.00	1.00	1.00	1.00	1.00	1.00	1.00	1.00
Lanes:	1.00	3.00	1.00	1.00	3.00	1.00	2.00	1.78	0.22	2.00	2.00	1.00
Final Sat.:	1600	4800	1600	1600	4800	1600	3200	2855	345	3200	3200	1600
Capacity Analysis Module:												
Vol/Sat:	0.08	0.26	0.09	0.10	0.28	0.21	0.09	0.26	0.26	0.05	0.44	0.11
OvlAdjV/S:						0.12						
Crit Moves:	****				****		****				****	

Newport Banning Ranch
Year 2016 Cumulative Conditions with Project
PM Peak Hour

Level Of Service Computation Report
ICU 1(Loss as Cycle Length %) Method (Future Volume Alternative)

Intersection #25 Newport Blvd/Victoria St [Ramp]

Cycle (sec):	120	Critical Vol./Cap.(X):	0.507
Loss Time (sec):	0 (Y+R=4.0 sec)	Average Delay (sec/veh):	xxxxxx
Optimal Cycle:	38	Level Of Service:	A

Street Name:	Newport Boulevard									Victoria Street								
Approach:	North Bound			South Bound			East Bound			West Bound		
Movement:	L	- T	- R	L	- T	- R	L	- T	- R	L	- T	- R
Control:	Permitted			Permitted			Protected			Protected		
Rights:	Include			Ignore			Include			Include		
Min. Green:	0	0	0	0	0	0	0	0	0	0	0	0
Lanes:	0 0	0 0	0	1 1	2 0	1	0 0	2 1	0	1 0	1 0	0
Volume Module:												
Base Vol:	0	0	0	590	911	1230	0	765	36	77	233	0
Growth Adj:	1.07	1.07	1.07	1.07	1.07	1.07	1.07	1.07	1.07	1.07	1.07	1.07
Initial Bse:	0	0	0	632	977	1319	0	820	39	83	250	0
Added Vol:	0	0	0	46	0	159	0	85	0	0	0	0
Committed P:	0	0	0	0	0	0	0	0	0	0	0	0
Initial Fut:	0	0	0	678	977	1478	0	905	39	83	250	0
User Adj:	1.00	1.00	1.00	1.00	1.00	0.00	1.00	1.00	1.00	1.00	1.00	1.00
PHF Adj:	1.00	1.00	1.00	1.00	1.00	0.00	1.00	1.00	1.00	1.00	1.00	1.00
PHF Volume:	0	0	0	678	977	0	0	905	39	83	250	0
Reduct Vol:	0	0	0	0	0	0	0	0	0	0	0	0
Reduced Vol:	0	0	0	678	977	0	0	905	39	83	250	0
PCE Adj:	1.00	1.00	1.00	1.00	1.00	0.00	1.00	1.00	1.00	1.00	1.00	1.00
MLF Adj:	1.00	1.00	1.00	1.00	1.00	0.00	1.00	1.00	1.00	1.00	1.00	1.00
FinalVolume:	0	0	0	678	977	0	0	905	39	83	250	0
Saturation Flow Module:												
Sat/Lane:	1600	1600	1600	1600	1600	1600	1600	1600	1600	1600	1600	1600
Adjustment:	1.00	1.00	1.00	1.00	1.00	1.00	1.00	1.00	1.00	1.00	1.00	1.00
Lanes:	0.00	0.00	0.00	1.64	2.36	1.00	0.00	2.88	0.12	1.00	1.00	0.00
Final Sat.:	0	0	0	2624	3776	1600	0	4604	196	1600	1600	0
Capacity Analysis Module:												
Vol/Sat:	0.00	0.00	0.00	0.26	0.26	0.00	0.00	0.20	0.20	0.05	0.16	0.00
Crit Moves:				****				****		****		

Newport Banning Ranch
Year 2016 Cumulative Conditions with Project
PM Peak Hour

Level Of Service Computation Report
ICU 1(Loss as Cycle Length %) Method (Future Volume Alternative)

Intersection #26 Newport Blvd /Victoria St (22nd St) [Ramp]

Cycle (sec):	120	Critical Vol./Cap.(X):	0.653
Loss Time (sec):	0 (Y+R=4.0 sec)	Average Delay (sec/veh):	xxxxxx
Optimal Cycle:	54	Level Of Service:	B

Street Name:	Newport Boulevard						Victoria Street (22nd Street)					
Approach:	North Bound			South Bound			East Bound			West Bound		
Movement:	L - T - R			L - T - R			L - T - R			L - T - R		
Control:	Permitted			Permitted			Protected			Protected		
Rights:	Include			Include			Include			Include		
Min. Green:	0	0	0	0	0	0	0	0	0	0	0	0
Lanes:	0 1 2	0 1		0 0 0	0 0		2 0 2	0 0		0 0 1	0 1	
Volume Module:												
Base Vol:	109	907	92	0	0	0	734	601	0	0	202	203
Growth Adj:	1.07	1.07	1.07	1.07	1.07	1.07	1.07	1.07	1.07	1.07	1.07	1.07
Initial Bse:	117	972	99	0	0	0	787	644	0	0	217	218
Added Vol:	0	0	0	0	0	0	85	46	0	0	0	28
Committed P:	0	0	0	0	0	0	0	0	0	0	0	0
Initial Fut:	117	972	99	0	0	0	872	690	0	0	217	246
User Adj:	1.00	1.00	1.00	1.00	1.00	1.00	1.00	1.00	1.00	1.00	1.00	1.00
PHF Adj:	1.00	1.00	1.00	1.00	1.00	1.00	1.00	1.00	1.00	1.00	1.00	1.00
PHF Volume:	117	972	99	0	0	0	872	690	0	0	217	246
Reduct Vol:	0	0	0	0	0	0	0	0	0	0	0	0
Reduced Vol:	117	972	99	0	0	0	872	690	0	0	217	246
PCE Adj:	1.00	1.00	1.00	1.00	1.00	1.00	1.00	1.00	1.00	1.00	1.00	1.00
MLF Adj:	1.00	1.00	1.00	1.00	1.00	1.00	1.00	1.00	1.00	1.00	1.00	1.00
FinalVolume:	117	972	99	0	0	0	872	690	0	0	217	246
Saturation Flow Module:												
Sat/Lane:	1600	1600	1600	1600	1600	1600	1600	1600	1600	1600	1600	1600
Adjustment:	1.00	1.00	1.00	1.00	1.00	1.00	1.00	1.00	1.00	1.00	1.00	1.00
Lanes:	0.32	2.68	1.00	0.00	0.00	0.00	2.00	2.00	0.00	0.00	1.00	1.00
Final Sat.:	515	4285	1600	0	0	0	3200	3200	0	0	1600	1600
Capacity Analysis Module:												
Vol/Sat:	0.07	0.23	0.06	0.00	0.00	0.00	0.27	0.22	0.00	0.00	0.14	0.15
Crit Moves:		****					****					****

Newport Banning Ranch
Year 2016 Cumulative Conditions with Project
PM Peak Hour

Level Of Service Computation Report
2000 HCM 4-Way Stop Method (Future Volume Alternative)

Intersection #27 Whittier Ave/19th St

Cycle (sec): 100 Critical Vol./Cap.(X): 0.353
Loss Time (sec): 0 (Y+R=4.0 sec) Average Delay (sec/veh): 10.1
Optimal Cycle: 0 Level Of Service: B

Street Name:	Whittier Avenue						19th St					
Approach:	North Bound			South Bound			East Bound			West Bound		
Movement:	L -	T -	R	L -	T -	R	L -	T -	R	L -	T -	R
Control:	Stop Sign			Stop Sign			Stop Sign			Stop Sign		
Rights:	Include			Include			Include			Include		
Min. Green:	0	0	0	0	0	0	0	0	0	0	0	0
Lanes:	0 0	1! 0	0	0 1	0 0	0	1 0	0 1	0	1 0	0 1	0
Volume Module:												
Base Vol:	32	6	175	17	4	0	1	66	11	146	97	18
Growth Adj:	1.07	1.07	1.07	1.07	1.07	1.07	1.07	1.07	1.07	1.07	1.07	1.07
Initial Bse:	34	6	188	18	4	0	1	71	12	157	104	19
Added Vol:	0	0	0	0	0	0	0	69	0	0	114	0
Committed P:	0	0	0	0	0	0	0	0	0	0	0	0
Initial Fut:	34	6	188	18	4	0	1	140	12	157	218	19
User Adj:	1.00	1.00	1.00	1.00	1.00	1.00	1.00	1.00	1.00	1.00	1.00	1.00
PHF Adj:	1.00	1.00	1.00	1.00	1.00	1.00	1.00	1.00	1.00	1.00	1.00	1.00
PHF Volume:	34	6	188	18	4	0	1	140	12	157	218	19
Reduct Vol:	0	0	0	0	0	0	0	0	0	0	0	0
Reduced Vol:	34	6	188	18	4	0	1	140	12	157	218	19
PCE Adj:	1.00	1.00	1.00	1.00	1.00	1.00	1.00	1.00	1.00	1.00	1.00	1.00
MLF Adj:	1.00	1.00	1.00	1.00	1.00	1.00	1.00	1.00	1.00	1.00	1.00	1.00
FinalVolume:	34	6	188	18	4	0	1	140	12	157	218	19
Saturation Flow Module:												
Adjustment:	1.00	1.00	1.00	1.00	1.00	1.00	1.00	1.00	1.00	1.00	1.00	1.00
Lanes:	0.15	0.03	0.82	0.81	0.19	0.00	1.00	0.92	0.08	1.00	0.92	0.08
Final Sat.:	107	20	587	468	110	0	571	579	49	608	617	55
Capacity Analysis Module:												
Vol/Sat:	0.32	0.32	0.32	0.04	0.04	xxxx	0.00	0.24	0.24	0.26	0.35	0.35
Crit Moves:		****			****			****			****	
Delay/Veh:	9.8	9.8	9.8	8.9	8.9	0.0	8.8	9.8	9.8	10.4	10.6	10.6
Delay Adj:	1.00	1.00	1.00	1.00	1.00	1.00	1.00	1.00	1.00	1.00	1.00	1.00
AdjDel/Veh:	9.8	9.8	9.8	8.9	8.9	0.0	8.8	9.8	9.8	10.4	10.6	10.6
LOS by Move:	A	A	A	A	A	*	A	A	A	B	B	B
ApproachDel:		9.8			8.9			9.8			10.5	
Delay Adj:		1.00			1.00			1.00			1.00	
ApprAdjDel:		9.8			8.9			9.8			10.5	
LOS by Appr:		A			A			A			B	
AllWayAvgQ:	0.4	0.4	0.4	0.0	0.0	0.0	0.0	0.3	0.3	0.3	0.5	0.5

Newport Banning Ranch
Year 2016 Cumulative Conditions with Project
PM Peak Hour

Note: Queue reported is the number of cars per lane.

Newport Banning Ranch
Year 2016 Cumulative Conditions with Project
PM Peak Hour

Level Of Service Computation Report
2000 HCM 4-Way Stop Method (Future Volume Alternative)

Intersection #28 Monrovia Ave/19th St

Cycle (sec):	100	Critical Vol./Cap.(X):	0.768
Loss Time (sec):	0 (Y+R=4.0 sec)	Average Delay (sec/veh):	21.2
Optimal Cycle:	0	Level Of Service:	C

Street Name:	Monrovia Avenue						19th Street					
Approach:	North Bound			South Bound			East Bound			West Bound		
Movement:	L - T - R			L - T - R			L - T - R			L - T - R		
Control:	Stop Sign			Stop Sign			Stop Sign			Stop Sign		
Rights:	Include			Include			Include			Include		
Min. Green:	0	0	0	0	0	0	0	0	0	0	0	0
Lanes:	0 1	0 0	1	0 0	1!	0 0	1	0 1	0 1	1	0 1	0 1
Volume Module:												
Base Vol:	14	25	243	50	9	3	6	259	9	124	255	50
Growth Adj:	1.07	1.07	1.07	1.07	1.07	1.07	1.07	1.07	1.07	1.07	1.07	1.07
Initial Bse:	15	27	260	54	10	3	6	278	10	133	273	54
Added Vol:	0	13	13	0	13	0	0	69	0	13	114	0
Committed P:	0	0	0	0	0	0	0	0	0	0	0	0
Initial Fut:	15	40	273	54	23	3	6	347	10	146	387	54
User Adj:	1.00	1.00	1.00	1.00	1.00	1.00	1.00	1.00	1.00	1.00	1.00	1.00
PHF Adj:	1.00	1.00	1.00	1.00	1.00	1.00	1.00	1.00	1.00	1.00	1.00	1.00
PHF Volume:	15	40	273	54	23	3	6	347	10	146	387	54
Reduct Vol:	0	0	0	0	0	0	0	0	0	0	0	0
Reduced Vol:	15	40	273	54	23	3	6	347	10	146	387	54
PCE Adj:	1.00	1.00	1.00	1.00	1.00	1.00	1.00	1.00	1.00	1.00	1.00	1.00
MLF Adj:	1.00	1.00	1.00	1.00	1.00	1.00	1.00	1.00	1.00	1.00	1.00	1.00
FinalVolume:	15	40	273	54	23	3	6	347	10	146	387	54
Saturation Flow Module:												
Adjustment:	1.00	1.00	1.00	1.00	1.00	1.00	1.00	1.00	1.00	1.00	1.00	1.00
Lanes:	0.27	0.73	1.00	0.67	0.29	0.04	1.00	1.00	1.00	1.00	1.00	1.00
Final Sat.:	126	334	521	272	115	16	436	475	511	466	505	547
Capacity Analysis Module:												
Vol/Sat:	0.12	0.12	0.52	0.20	0.20	0.20	0.01	0.73	0.02	0.31	0.77	0.10
Crit Moves:			****	****				****			****	
Delay/Veh:	11.1	11.1	15.8	12.8	12.8	12.8	10.7	26.5	9.5	13.5	28.3	9.7
Delay Adj:	1.00	1.00	1.00	1.00	1.00	1.00	1.00	1.00	1.00	1.00	1.00	1.00
AdjDel/Veh:	11.1	11.1	15.8	12.8	12.8	12.8	10.7	26.5	9.5	13.5	28.3	9.7
LOS by Move:	B	B	C	B	B	B	B	D	A	B	D	A
ApproachDel:	15.0			12.8			25.8			22.9		
Delay Adj:	1.00			1.00			1.00			1.00		
ApprAdjDel:	15.0			12.8			25.8			22.9		
LOS by Appr:	B			B			D			C		
AllWayAvgQ:	0.1	0.1	0.9	0.2	0.2	0.2	0.0	2.2	0.0	0.4	2.6	0.1

Newport Banning Ranch
Year 2016 Cumulative Conditions with Project
PM Peak Hour

Note: Queue reported is the number of cars per lane.

Newport Banning Ranch
Year 2016 Cumulative Conditions with Project
PM Peak Hour

Level Of Service Computation Report
ICU 1(Loss as Cycle Length %) Method (Future Volume Alternative)

Intersection #29 Placentia Ave/19th St

Cycle (sec):	100	Critical Vol./Cap.(X):	0.789
Loss Time (sec):	0 (Y+R=4.0 sec)	Average Delay (sec/veh):	xxxxxx
Optimal Cycle:	108	Level Of Service:	C

Street Name:	Placentia Avenue						19th Street					
Approach:	North Bound			South Bound			East Bound			West Bound		
Movement:	L - T - R			L - T - R			L - T - R			L - T - R		
Control:	Protected			Protected			Protected			Protected		
Rights:	Include			Include			Include			Include		
Min. Green:	0	0	0	0	0	0	0	0	0	0	0	0
Lanes:	1 0 2	0 1		1 0 1	1 0		2 0 1	1 0		2 0 2	0 1	
Volume Module:												
Base Vol:	49	863	246	206	565	221	306	600	56	248	405	281
Growth Adj:	1.07	1.07	1.07	1.07	1.07	1.07	1.07	1.07	1.07	1.07	1.07	1.07
Initial Bse:	53	925	264	221	606	237	328	643	60	266	434	301
Added Vol:	-8	113	6	0	134	3	2	80	-21	11	124	8
Committed P:	1	5	1	0	0	0	0	0	0	0	0	0
Initial Fut:	46	1043	271	221	740	240	330	723	39	277	558	309
User Adj:	1.00	1.00	1.00	1.00	1.00	1.00	1.00	1.00	1.00	1.00	1.00	1.00
PHF Adj:	1.00	1.00	1.00	1.00	1.00	1.00	1.00	1.00	1.00	1.00	1.00	1.00
PHF Volume:	46	1043	271	221	740	240	330	723	39	277	558	309
Reduct Vol:	0	0	0	0	0	0	0	0	0	0	0	0
Reduced Vol:	46	1043	271	221	740	240	330	723	39	277	558	309
PCE Adj:	1.00	1.00	1.00	1.00	1.00	1.00	1.00	1.00	1.00	1.00	1.00	1.00
MLF Adj:	1.00	1.00	1.00	1.00	1.00	1.00	1.00	1.00	1.00	1.00	1.00	1.00
FinalVolume:	46	1043	271	221	740	240	330	723	39	277	558	309
Saturation Flow Module:												
Sat/Lane:	1600	1600	1600	1600	1600	1600	1600	1600	1600	1600	1600	1600
Adjustment:	1.00	1.00	1.00	1.00	1.00	1.00	1.00	1.00	1.00	1.00	1.00	1.00
Lanes:	1.00	2.00	1.00	1.00	1.51	0.49	2.00	1.90	0.10	2.00	2.00	1.00
Final Sat.:	1600	3200	1600	1600	2416	784	3200	3036	164	3200	3200	1600
Capacity Analysis Module:												
Vol/Sat:	0.03	0.33	0.17	0.14	0.31	0.31	0.10	0.24	0.24	0.09	0.17	0.19
Crit Moves:		****		****				****		****		

Newport Banning Ranch
Year 2016 Cumulative Conditions with Project
PM Peak Hour

Level Of Service Computation Report
ICU 1(Loss as Cycle Length %) Method (Future Volume Alternative)

Intersection #30 Pomona Ave/19th St

Cycle (sec):	100	Critical Vol./Cap.(X):	0.650
Loss Time (sec):	0 (Y+R=4.0 sec)	Average Delay (sec/veh):	xxxxxx
Optimal Cycle:	65	Level Of Service:	B

Street Name:	Pomona Avenue						19th Street					
Approach:	North Bound			South Bound			East Bound			West Bound		
Movement:	L - T - R			L - T - R			L - T - R			L - T - R		
Control:	Protected			Protected			Prot+Permit			Prot+Permit		
Rights:	Include			Include			Include			Include		
Min. Green:	0	0	0	0	0	0	0	0	0	0	0	0
Lanes:	1 0 0	1 0		1 0 0	1 0		1 0 1	1 0		1 0 1	1 0	
Volume Module:												
Base Vol:	50	125	110	63	98	55	40	922	47	127	809	59
Growth Adj:	1.07	1.07	1.07	1.07	1.07	1.07	1.07	1.07	1.07	1.07	1.07	1.07
Initial Bse:	54	134	118	68	105	59	43	988	50	136	867	63
Added Vol:	0	5	6	1	7	0	0	87	0	9	142	0
Committed P:	0	0	0	0	0	0	0	0	0	0	0	0
Initial Fut:	54	139	124	69	112	59	43	1075	50	145	1009	63
User Adj:	1.00	1.00	1.00	1.00	1.00	1.00	1.00	1.00	1.00	1.00	1.00	1.00
PHF Adj:	1.00	1.00	1.00	1.00	1.00	1.00	1.00	1.00	1.00	1.00	1.00	1.00
PHF Volume:	54	139	124	69	112	59	43	1075	50	145	1009	63
Reduct Vol:	0	0	0	0	0	0	0	0	0	0	0	0
Reduced Vol:	54	139	124	69	112	59	43	1075	50	145	1009	63
PCE Adj:	1.00	1.00	1.00	1.00	1.00	1.00	1.00	1.00	1.00	1.00	1.00	1.00
MLF Adj:	1.00	1.00	1.00	1.00	1.00	1.00	1.00	1.00	1.00	1.00	1.00	1.00
FinalVolume:	54	139	124	69	112	59	43	1075	50	145	1009	63
Saturation Flow Module:												
Sat/Lane:	1600	1600	1600	1600	1600	1600	1600	1600	1600	1600	1600	1600
Adjustment:	1.00	1.00	1.00	1.00	1.00	1.00	1.00	1.00	1.00	1.00	1.00	1.00
Lanes:	1.00	0.53	0.47	1.00	0.66	0.34	1.00	1.91	0.09	1.00	1.88	0.12
Final Sat.:	1600	846	754	1600	1048	552	1600	3057	143	1600	3011	189
Capacity Analysis Module:												
Vol/Sat:	0.03	0.16	0.16	0.04	0.11	0.11	0.03	0.35	0.35	0.09	0.34	0.34
Crit Moves:		****		****				****		****		

Newport Banning Ranch
Year 2016 Cumulative Conditions with Project
PM Peak Hour

Level Of Service Computation Report
ICU 1(Loss as Cycle Length %) Method (Future Volume Alternative)

Intersection #31 Anaheim Ave/19th St

Cycle (sec):	100	Critical Vol./Cap.(X):	0.614
Loss Time (sec):	0 (Y+R=4.0 sec)	Average Delay (sec/veh):	xxxxxx
Optimal Cycle:	48	Level Of Service:	B

Street Name:	Anaheim Avenue						19th Street					
Approach:	North Bound			South Bound			East Bound			West Bound		
Movement:	L - T - R			L - T - R			L - T - R			L - T - R		
Control:	Permitted			Permitted			Prot+Permit			Prot+Permit		
Rights:	Include			Include			Include			Include		
Min. Green:	0	0	0	0	0	0	0	0	0	0	0	0
Lanes:	1 0 0	1 0		0 1 0	1 0		0 1 0	1 1 0		1 0 2	0 1	
Volume Module:												
Base Vol:	61	60	97	59	48	26	45	1023	53	118	947	109
Growth Adj:	1.07	1.07	1.07	1.07	1.07	1.07	1.07	1.07	1.07	1.07	1.07	1.07
Initial Bse:	65	64	104	63	51	28	48	1097	57	126	1015	117
Added Vol:	0	0	0	0	0	0	0	96	0	0	157	0
Committed P:	0	0	0	0	0	0	0	0	0	0	0	0
Initial Fut:	65	64	104	63	51	28	48	1193	57	126	1172	117
User Adj:	1.00	1.00	1.00	1.00	1.00	1.00	1.00	1.00	1.00	1.00	1.00	1.00
PHF Adj:	1.00	1.00	1.00	1.00	1.00	1.00	1.00	1.00	1.00	1.00	1.00	1.00
PHF Volume:	65	64	104	63	51	28	48	1193	57	126	1172	117
Reduct Vol:	0	0	0	0	0	0	0	0	0	0	0	0
Reduced Vol:	65	64	104	63	51	28	48	1193	57	126	1172	117
PCE Adj:	1.00	1.00	1.00	1.00	1.00	1.00	1.00	1.00	1.00	1.00	1.00	1.00
MLF Adj:	1.00	1.00	1.00	1.00	1.00	1.00	1.00	1.00	1.00	1.00	1.00	1.00
FinalVolume:	65	64	104	63	51	28	48	1193	57	126	1172	117
Saturation Flow Module:												
Sat/Lane:	1600	1600	1600	1600	1600	1600	1600	1600	1600	1600	1600	1600
Adjustment:	1.00	1.00	1.00	1.00	1.00	1.00	1.00	1.00	1.00	1.00	1.00	1.00
Lanes:	1.00	0.38	0.62	1.00	0.65	0.35	1.00	1.91	0.09	1.00	2.00	1.00
Final Sat.:	1600	611	989	1600	1038	562	1600	3054	146	1600	3200	1600
Capacity Analysis Module:												
Vol/Sat:	0.04	0.11	0.11	0.04	0.05	0.05	0.03	0.39	0.39	0.08	0.37	0.07
Crit Moves:		****		****				****		****		

Newport Banning Ranch
Year 2016 Cumulative Conditions with Project
PM Peak Hour

Level Of Service Computation Report
ICU 1(Loss as Cycle Length %) Method (Future Volume Alternative)

Intersection #32 Park Ave/19th St

Cycle (sec):	100	Critical Vol./Cap.(X):	0.612
Loss Time (sec):	0 (Y+R=4.0 sec)	Average Delay (sec/veh):	xxxxxx
Optimal Cycle:	48	Level Of Service:	B

Street Name:	Park Avenue						19th St					
Approach:	North Bound			South Bound			East Bound			West Bound		
Movement:	L - T - R			L - T - R			L - T - R			L - T - R		
Control:	Permitted			Permitted			Prot+Permit			Prot+Permit		
Rights:	Include			Include			Include			Include		
Min. Green:	0	0	0	0	0	0	0	0	0	0	0	0
Lanes:	2 0 0 0 1			0 0 0 0 0			1 0 2 0 1			1 0 3 0 0		
Volume Module:												
Base Vol:	119	0	153	0	0	0	20	1069	70	183	1034	0
Growth Adj:	1.07	1.07	1.07	1.07	1.07	1.07	1.07	1.07	1.07	1.07	1.07	1.07
Initial Bse:	128	0	164	0	0	0	21	1146	75	196	1108	0
Added Vol:	0	0	0	0	0	0	0	92	0	0	150	0
Committed P:	0	0	0	0	0	0	0	0	0	0	0	0
Initial Fut:	128	0	164	0	0	0	21	1238	75	196	1258	0
User Adj:	1.00	1.00	1.00	1.00	1.00	1.00	1.00	1.00	1.00	1.00	1.00	1.00
PHF Adj:	1.00	1.00	1.00	1.00	1.00	1.00	1.00	1.00	1.00	1.00	1.00	1.00
PHF Volume:	128	0	164	0	0	0	21	1238	75	196	1258	0
Reduct Vol:	0	0	0	0	0	0	0	0	0	0	0	0
Reduced Vol:	128	0	164	0	0	0	21	1238	75	196	1258	0
PCE Adj:	1.00	1.00	1.00	1.00	1.00	1.00	1.00	1.00	1.00	1.00	1.00	1.00
MLF Adj:	1.00	1.00	1.00	1.00	1.00	1.00	1.00	1.00	1.00	1.00	1.00	1.00
FinalVolume:	128	0	164	0	0	0	21	1238	75	196	1258	0
Saturation Flow Module:												
Sat/Lane:	1600	1600	1600	1600	1600	1600	1600	1600	1600	1600	1600	1600
Adjustment:	1.00	1.00	1.00	1.00	1.00	1.00	1.00	1.00	1.00	1.00	1.00	1.00
Lanes:	2.00	0.00	1.00	0.00	0.00	0.00	1.00	2.00	1.00	1.00	3.00	0.00
Final Sat.:	3200	0	1600	0	0	0	1600	3200	1600	1600	4800	0
Capacity Analysis Module:												
Vol/Sat:	0.04	0.00	0.10	0.00	0.00	0.00	0.01	0.39	0.05	0.12	0.26	0.00
Crit Moves:			****					****		****		

Newport Banning Ranch
Year 2016 Cumulative Conditions with Project
PM Peak Hour

Level Of Service Computation Report
ICU 1(Loss as Cycle Length %) Method (Future Volume Alternative)

Intersection #33 Harbor Blvd/19th St

Cycle (sec):	100	Critical Vol./Cap.(X):	0.674
Loss Time (sec):	0 (Y+R=4.0 sec)	Average Delay (sec/veh):	xxxxxx
Optimal Cycle:	70	Level Of Service:	B

Street Name:	Harbor Boulevard						19th Street					
Approach:	North Bound			South Bound			East Bound			West Bound		
Movement:	L - T - R			L - T - R			L - T - R			L - T - R		
Control:	Protected			Protected			Protected			Protected		
Rights:	Include			Include			Include			Include		
Min. Green:	0	0	0	0	0	0	0	0	0	0	0	0
Lanes:	1 0 2	1 0		1 0 2	0 1		2 0 2	1 0		1 0 3	0 1	
Volume Module:												
Base Vol:	75	453	23	183	614	317	481	749	65	188	791	215
Growth Adj:	1.06	1.06	1.06	1.06	1.06	1.06	1.06	1.06	1.06	1.06	1.06	1.06
Initial Bse:	80	481	24	194	652	336	511	795	69	200	840	228
Added Vol:	10	55	0	3	68	67	47	43	2	0	73	5
Committed P:	3	11	0	0	24	0	0	0	6	0	0	0
Initial Fut:	93	547	24	197	744	403	558	838	77	200	913	233
User Adj:	1.00	1.00	1.00	1.00	1.00	1.00	1.00	1.00	1.00	1.00	1.00	1.00
PHF Adj:	1.00	1.00	1.00	1.00	1.00	1.00	1.00	1.00	1.00	1.00	1.00	1.00
PHF Volume:	93	547	24	197	744	403	558	838	77	200	913	233
Reduct Vol:	0	0	0	0	0	0	0	0	0	0	0	0
Reduced Vol:	93	547	24	197	744	403	558	838	77	200	913	233
PCE Adj:	1.00	1.00	1.00	1.00	1.00	1.00	1.00	1.00	1.00	1.00	1.00	1.00
MLF Adj:	1.00	1.00	1.00	1.00	1.00	1.00	1.00	1.00	1.00	1.00	1.00	1.00
FinalVolume:	93	547	24	197	744	403	558	838	77	200	913	233
Saturation Flow Module:												
Sat/Lane:	1600	1600	1600	1600	1600	1600	1600	1600	1600	1600	1600	1600
Adjustment:	1.00	1.00	1.00	1.00	1.00	1.00	1.00	1.00	1.00	1.00	1.00	1.00
Lanes:	1.00	2.87	0.13	1.00	2.00	1.00	2.00	2.75	0.25	1.00	3.00	1.00
Final Sat.:	1600	4595	205	1600	3200	1600	3200	4396	404	1600	4800	1600
Capacity Analysis Module:												
Vol/Sat:	0.06	0.12	0.12	0.12	0.23	0.25	0.17	0.19	0.19	0.12	0.19	0.15
Crit Moves:	****					****	****				****	

Newport Banning Ranch
Year 2016 Cumulative Conditions with Project
PM Peak Hour

Level Of Service Computation Report
ICU 1(Loss as Cycle Length %) Method (Future Volume Alternative)

Intersection #34 Newport Blvd/19th St

Cycle (sec):	120	Critical Vol./Cap.(X):	0.881
Loss Time (sec):	0 (Y+R=4.0 sec)	Average Delay (sec/veh):	xxxxxx
Optimal Cycle:	180	Level Of Service:	D

Street Name:	Newport Boulevard						19th Street					
Approach:	North Bound			South Bound			East Bound			West Bound		
Movement:	L - T - R			L - T - R			L - T - R			L - T - R		
Control:	Protected			Protected			Split Phase			Split Phase		
Rights:	Include			Include			Include			Include		
Min. Green:	0	0	0	0	0	0	0	0	0	0	0	0
Lanes:	1 0 3	1 0		1 0 3	1 1		2 1 1	0 1		1 0 2	1 1	
Volume Module:												
Base Vol:	65	2649	38	202	3114	757	731	171	33	54	321	152
Growth Adj:	1.07	1.07	1.07	1.07	1.07	1.07	1.07	1.07	1.07	1.07	1.07	1.07
Initial Bse:	70	2840	41	217	3338	812	784	183	35	58	344	163
Added Vol:	0	250	9	0	345	73	43	3	0	0	5	0
Committed P:	0	21	0	0	31	0	0	0	11	0	0	0
Initial Fut:	70	3111	50	217	3714	885	827	186	46	58	349	163
User Adj:	1.00	1.00	1.00	1.00	1.00	1.00	1.00	1.00	1.00	1.00	1.00	1.00
PHF Adj:	1.00	1.00	1.00	1.00	1.00	1.00	1.00	1.00	1.00	1.00	1.00	1.00
PHF Volume:	70	3111	50	217	3714	885	827	186	46	58	349	163
Reduct Vol:	0	0	0	0	0	0	0	0	0	0	0	0
Reduced Vol:	70	3111	50	217	3714	885	827	186	46	58	349	163
PCE Adj:	1.00	1.00	1.00	1.00	1.00	1.00	1.00	1.00	1.00	1.00	1.00	1.00
MLF Adj:	1.00	1.00	1.00	1.00	1.00	1.00	1.00	1.00	1.00	1.00	1.00	1.00
FinalVolume:	70	3111	50	217	3714	885	827	186	46	58	349	163
Saturation Flow Module:												
Sat/Lane:	1600	1600	1600	1600	1600	1600	1600	1600	1600	1600	1600	1600
Adjustment:	1.00	1.00	1.00	1.00	1.00	1.00	1.00	1.00	1.00	1.00	1.00	1.00
Lanes:	1.00	3.94	0.06	1.00	4.00	1.00	3.00	1.00	1.00	1.00	2.73	1.27
Final Sat.:	1600	6299	101	1600	6400	1600	4800	1600	1600	1600	4363	2037
Capacity Analysis Module:												
Vol/Sat:	0.04	0.49	0.49	0.14	0.58	0.55	0.17	0.12	0.03	0.04	0.08	0.08
Crit Moves:		****		****			****				****	

Newport Banning Ranch
Year 2016 Cumulative Conditions with Project
PM Peak Hour

Level Of Service Computation Report
ICU 1(Loss as Cycle Length %) Method (Future Volume Alternative)

Intersection #35 Newport Blvd/Broadway

Cycle (sec):	120	Critical Vol./Cap.(X):	0.863
Loss Time (sec):	0 (Y+R=4.0 sec)	Average Delay (sec/veh):	xxxxxx
Optimal Cycle:	136	Level Of Service:	D

Street Name:	Newport Boulevard									Broadway								
Approach:	North Bound			South Bound			East Bound			West Bound		
Movement:	L	- T	- R	L	- T	- R	L	- T	- R	L	- T	- R
Control:	Protected			Protected			Permitted			Permitted		
Rights:	Include			Include			Include			Include		
Min. Green:	0	0	0	0	0	0	0	0	0	0	0	0
Lanes:	1 0	3 1	0	1 0	3 0	1	0 1	0 0	1	1 0	0 1	0
Volume Module:												
Base Vol:	7	2542	55	142	3061	62	18	23	14	33	15	95
Growth Adj:	1.07	1.07	1.07	1.07	1.07	1.07	1.07	1.07	1.07	1.07	1.07	1.07
Initial Bse:	8	2725	59	152	3281	66	19	25	15	35	16	102
Added Vol:	2	250	0	0	345	0	9	0	2	0	0	0
Committed P:	0	25	0	0	48	0	0	0	0	0	0	0
Initial Fut:	10	3000	59	152	3674	66	28	25	17	35	16	102
User Adj:	1.00	1.00	1.00	1.00	1.00	1.00	1.00	1.00	1.00	1.00	1.00	1.00
PHF Adj:	1.00	1.00	1.00	1.00	1.00	1.00	1.00	1.00	1.00	1.00	1.00	1.00
PHF Volume:	10	3000	59	152	3674	66	28	25	17	35	16	102
Reduct Vol:	0	0	0	0	0	0	0	0	0	0	0	0
Reduced Vol:	10	3000	59	152	3674	66	28	25	17	35	16	102
PCE Adj:	1.00	1.00	1.00	1.00	1.00	1.00	1.00	1.00	1.00	1.00	1.00	1.00
MLF Adj:	1.00	1.00	1.00	1.00	1.00	1.00	1.00	1.00	1.00	1.00	1.00	1.00
FinalVolume:	10	3000	59	152	3674	66	28	25	17	35	16	102
Saturation Flow Module:												
Sat/Lane:	1600	1600	1600	1600	1600	1600	1600	1600	1600	1600	1600	1600
Adjustment:	1.00	1.00	1.00	1.00	1.00	1.00	1.00	1.00	1.00	1.00	1.00	1.00
Lanes:	1.00	3.92	0.08	1.00	3.00	1.00	0.53	0.47	1.00	1.00	0.14	0.86
Final Sat.:	1600	6277	123	1600	4800	1600	855	745	1600	1600	218	1382
Capacity Analysis Module:												
Vol/Sat:	0.01	0.48	0.48	0.10	0.77	0.04	0.02	0.03	0.01	0.02	0.07	0.07
Crit Moves:	****				****		****				****	

Newport Banning Ranch
Year 2016 Cumulative Conditions with Project
PM Peak Hour

Level Of Service Computation Report
ICU 1(Loss as Cycle Length %) Method (Future Volume Alternative)

Intersection #36 Newport Blvd/Harbor Blvd

Cycle (sec):	120	Critical Vol./Cap.(X):	1.149
Loss Time (sec):	0 (Y+R=4.0 sec)	Average Delay (sec/veh):	xxxxxx
Optimal Cycle:	180	Level Of Service:	F

Street Name:	Newport Boulevard						Harbor Boulevard					
Approach:	North Bound			South Bound			East Bound			West Bound		
Movement:	L - T - R			L - T - R			L - T - R			L - T - R		
Control:	Protected			Protected			Protected			Protected		
Rights:	Include			Include			Ovl			Include		
Min. Green:	0	0	0	0	0	0	0	0	0	0	0	0
Lanes:	2 0 4 0 0			0 0 2 1 0			1 0 0 0 2			0 0 0 0 0		
Volume Module:												
Base Vol:	726	2480	0	0	3160	50	123	0	537	0	0	0
Growth Adj:	1.07	1.07	1.07	1.07	1.07	1.07	1.07	1.07	1.07	1.07	1.07	1.07
Initial Bse:	778	2659	0	0	3388	54	132	0	576	0	0	0
Added Vol:	47	252	0	0	347	0	0	0	64	0	0	0
Committed P:	27	28	0	0	51	0	0	0	50	0	0	0
Initial Fut:	852	2939	0	0	3786	54	132	0	690	0	0	0
User Adj:	1.00	1.00	1.00	1.00	1.00	1.00	1.00	1.00	1.00	1.00	1.00	1.00
PHF Adj:	1.00	1.00	1.00	1.00	1.00	1.00	1.00	1.00	1.00	1.00	1.00	1.00
PHF Volume:	852	2939	0	0	3786	54	132	0	690	0	0	0
Reduct Vol:	0	0	0	0	0	0	0	0	0	0	0	0
Reduced Vol:	852	2939	0	0	3786	54	132	0	690	0	0	0
PCE Adj:	1.00	1.00	1.00	1.00	1.00	1.00	1.00	1.00	1.00	1.00	1.00	1.00
MLF Adj:	1.00	1.00	1.00	1.00	1.00	1.00	1.00	1.00	1.00	1.00	1.00	1.00
FinalVolume:	852	2939	0	0	3786	54	132	0	690	0	0	0
OvlAdjVol:									0			
Saturation Flow Module:												
Sat/Lane:	1600	1600	1600	1600	1600	1600	1600	1600	1600	1600	1600	1600
Adjustment:	1.00	1.00	1.00	1.00	1.00	1.00	1.00	1.00	1.00	1.00	1.00	1.00
Lanes:	2.00	4.00	0.00	0.00	2.96	0.04	1.00	0.00	2.00	0.00	0.00	0.00
Final Sat.:	3200	6400	0	0	4733	67	1600	0	3200	0	0	0
Capacity Analysis Module:												
Vol/Sat:	0.27	0.46	0.00	0.00	0.80	0.80	0.08	0.00	0.22	0.00	0.00	0.00
OvlAdjV/S:									0.00			
Crit Moves:	****				****		****					

Newport Banning Ranch
Year 2016 Cumulative Conditions with Project
PM Peak Hour

Level Of Service Computation Report
ICU 1(Loss as Cycle Length %) Method (Future Volume Alternative)

Intersection #37 Newport Blvd/18th St (Rochester St)

Cycle (sec):	120	Critical Vol./Cap.(X):	1.160
Loss Time (sec):	0 (Y+R=4.0 sec)	Average Delay (sec/veh):	xxxxxx
Optimal Cycle:	180	Level Of Service:	F

Street Name:	Newport Boulevard						18th Street (Rochester Street)					
Approach:	North Bound			South Bound			East Bound			West Bound		
Movement:	L - T - R			L - T - R			L - T - R			L - T - R		
Control:	Protected			Protected			Split Phase			Split Phase		
Rights:	Include			Include			Include			Include		
Min. Green:	0	0	0	0	0	0	0	0	0	0	0	0
Lanes:	1 0 3	1 0		1 0 3	0 1		2 0 1	0 1		1 0 0	1 0	
Volume Module:												
Base Vol:	111	2724	15	125	3515	144	251	75	48	18	124	22
Growth Adj:	1.07	1.07	1.07	1.07	1.07	1.07	1.07	1.07	1.07	1.07	1.07	1.07
Initial Bse:	119	2920	16	134	3768	154	269	80	51	19	133	24
Added Vol:	0	244	0	0	335	77	55	0	0	0	0	0
Committed P:	14	68	0	0	111	0	0	0	21	0	0	0
Initial Fut:	133	3232	16	134	4214	231	324	80	72	19	133	24
User Adj:	1.00	1.00	1.00	1.00	1.00	1.00	1.00	1.00	1.00	1.00	1.00	1.00
PHF Adj:	1.00	1.00	1.00	1.00	1.00	1.00	1.00	1.00	1.00	1.00	1.00	1.00
PHF Volume:	133	3232	16	134	4214	231	324	80	72	19	133	24
Reduct Vol:	0	0	0	0	0	0	0	0	0	0	0	0
Reduced Vol:	133	3232	16	134	4214	231	324	80	72	19	133	24
PCE Adj:	1.00	1.00	1.00	1.00	1.00	1.00	1.00	1.00	1.00	1.00	1.00	1.00
MLF Adj:	1.00	1.00	1.00	1.00	1.00	1.00	1.00	1.00	1.00	1.00	1.00	1.00
FinalVolume:	133	3232	16	134	4214	231	324	80	72	19	133	24
Saturation Flow Module:												
Sat/Lane:	1600	1600	1600	1600	1600	1600	1600	1600	1600	1600	1600	1600
Adjustment:	1.00	1.00	1.00	1.00	1.00	1.00	1.00	1.00	1.00	1.00	1.00	1.00
Lanes:	1.00	3.98	0.02	1.00	3.00	1.00	2.00	1.00	1.00	1.00	0.85	0.15
Final Sat.:	1600	6368	32	1600	4800	1600	3200	1600	1600	1600	1359	241
Capacity Analysis Module:												
Vol/Sat:	0.08	0.51	0.51	0.08	0.88	0.14	0.10	0.05	0.05	0.01	0.10	0.10
Crit Moves:	****				****		****					****

Newport Banning Ranch
Year 2016 Cumulative Conditions with Project
PM Peak Hour

Level Of Service Computation Report
ICU 1(Loss as Cycle Length %) Method (Future Volume Alternative)

Intersection #38 Placentia Ave/18th St

Cycle (sec):	100	Critical Vol./Cap.(X):	0.575
Loss Time (sec):	0 (Y+R=4.0 sec)	Average Delay (sec/veh):	xxxxxx
Optimal Cycle:	44	Level Of Service:	A

Street Name:	Placentia Avenue						18th Street					
Approach:	North Bound			South Bound			East Bound			West Bound		
Movement:	L - T - R			L - T - R			L - T - R			L - T - R		
Control:	Protected			Protected			Permitted			Permitted		
Rights:	Include			Include			Include			Include		
Min. Green:	0	0	0	0	0	0	0	0	0	0	0	0
Lanes:	1 0 1	1 0		1 0 1	1 0		1 0 0	1 0		1 0 0	1 0	
Volume Module:												
Base Vol:	14	889	58	45	523	47	60	169	27	16	87	80
Growth Adj:	1.07	1.07	1.07	1.07	1.07	1.07	1.07	1.07	1.07	1.07	1.07	1.07
Initial Bse:	15	953	62	48	561	50	64	181	29	17	93	86
Added Vol:	0	70	0	0	22	7	4	55	0	0	77	0
Committed P:	1	10	1	0	1	0	0	0	0	0	0	0
Initial Fut:	16	1033	63	48	584	57	68	236	29	17	170	86
User Adj:	1.00	1.00	1.00	1.00	1.00	1.00	1.00	1.00	1.00	1.00	1.00	1.00
PHF Adj:	1.00	1.00	1.00	1.00	1.00	1.00	1.00	1.00	1.00	1.00	1.00	1.00
PHF Volume:	16	1033	63	48	584	57	68	236	29	17	170	86
Reduct Vol:	0	0	0	0	0	0	0	0	0	0	0	0
Reduced Vol:	16	1033	63	48	584	57	68	236	29	17	170	86
PCE Adj:	1.00	1.00	1.00	1.00	1.00	1.00	1.00	1.00	1.00	1.00	1.00	1.00
MLF Adj:	1.00	1.00	1.00	1.00	1.00	1.00	1.00	1.00	1.00	1.00	1.00	1.00
FinalVolume:	16	1033	63	48	584	57	68	236	29	17	170	86
Saturation Flow Module:												
Sat/Lane:	1600	1600	1600	1600	1600	1600	1600	1600	1600	1600	1600	1600
Adjustment:	1.00	1.00	1.00	1.00	1.00	1.00	1.00	1.00	1.00	1.00	1.00	1.00
Lanes:	1.00	1.88	0.12	1.00	1.82	0.18	1.00	0.89	0.11	1.00	0.67	0.33
Final Sat.:	1600	3016	184	1600	2914	286	1600	1425	175	1600	1064	536
Capacity Analysis Module:												
Vol/Sat:	0.01	0.34	0.34	0.03	0.20	0.20	0.04	0.17	0.17	0.01	0.16	0.16
Crit Moves:		****		****			****				****	

Newport Banning Ranch
Year 2016 Cumulative Conditions with Project
PM Peak Hour

Level Of Service Computation Report
2000 HCM 4-Way Stop Method (Future Volume Alternative)

Intersection #39 Whittier Ave/17th St

Cycle (sec):	100	Critical Vol./Cap.(X):	0.543
Loss Time (sec):	0 (Y+R=4.0 sec)	Average Delay (sec/veh):	11.2
Optimal Cycle:	0	Level Of Service:	B

Street Name:	Whittier Avenue						17th St					
Approach:	North Bound			South Bound			East Bound			West Bound		
Movement:	L - T - R			L - T - R			L - T - R			L - T - R		
Control:	Stop Sign			Stop Sign			Stop Sign			Stop Sign		
Rights:	Include			Include			Include			Include		
Min. Green:	0	0	0	0	0	0	0	0	0	0	0	0
Lanes:	0 0 0 1 0			0 0 1! 0 0			0 1 0 0 0			0 0 1! 0 0		
Volume Module:												
Base Vol:	0	11	8	62	9	3	2	14	0	14	9	83
Growth Adj:	1.07	1.07	1.07	1.07	1.07	1.07	1.07	1.07	1.07	1.07	1.07	1.07
Initial Bse:	0	12	9	66	10	3	2	15	0	15	10	89
Added Vol:	0	0	0	0	0	62	44	194	0	0	310	0
Committed P:	0	0	0	0	0	0	0	0	0	0	0	0
Initial Fut:	0	12	9	66	10	65	46	209	0	15	320	89
User Adj:	1.00	1.00	1.00	1.00	1.00	1.00	1.00	1.00	1.00	1.00	1.00	1.00
PHF Adj:	1.00	1.00	1.00	1.00	1.00	1.00	1.00	1.00	1.00	1.00	1.00	1.00
PHF Volume:	0	12	9	66	10	65	46	209	0	15	320	89
Reduct Vol:	0	0	0	0	0	0	0	0	0	0	0	0
Reduced Vol:	0	12	9	66	10	65	46	209	0	15	320	89
PCE Adj:	1.00	1.00	1.00	1.00	1.00	1.00	1.00	1.00	1.00	1.00	1.00	1.00
MLF Adj:	1.00	1.00	1.00	1.00	1.00	1.00	1.00	1.00	1.00	1.00	1.00	1.00
FinalVolume:	0	12	9	66	10	65	46	209	0	15	320	89
Saturation Flow Module:												
Adjustment:	1.00	1.00	1.00	1.00	1.00	1.00	1.00	1.00	1.00	1.00	1.00	1.00
Lanes:	0.00	0.58	0.42	0.47	0.07	0.46	0.18	0.82	0.00	0.04	0.75	0.21
Final Sat.:	0	337	245	295	43	289	130	590	0	28	589	164
Capacity Analysis Module:												
Vol/Sat:	xxxx	0.04	0.04	0.23	0.23	0.23	0.35	0.35	xxxx	0.54	0.54	0.54
Crit Moves:		****			****			****			****	
Delay/Veh:	0.0	8.5	8.5	9.6	9.6	9.6	10.3	10.3	0.0	12.5	12.5	12.5
Delay Adj:	1.00	1.00	1.00	1.00	1.00	1.00	1.00	1.00	1.00	1.00	1.00	1.00
AdjDel/Veh:	0.0	8.5	8.5	9.6	9.6	9.6	10.3	10.3	0.0	12.5	12.5	12.5
LOS by Move:	*	A	A	A	A	A	B	B	*	B	B	B
ApproachDel:		8.5			9.6			10.3			12.5	
Delay Adj:		1.00			1.00			1.00			1.00	
ApprAdjDel:		8.5			9.6			10.3			12.5	
LOS by Appr:		A			A			B			B	
AllWayAvgQ:	0.0	0.0	0.0	0.2	0.2	0.2	0.5	0.5	0.5	1.1	1.1	1.1

Newport Banning Ranch
Year 2016 Cumulative Conditions with Project
PM Peak Hour

Note: Queue reported is the number of cars per lane.

Newport Banning Ranch
Year 2016 Cumulative Conditions with Project
PM Peak Hour

Level Of Service Computation Report
2000 HCM 4-Way Stop Method (Future Volume Alternative)

Intersection #40 Monrovia Ave/17th St

Cycle (sec):	100	Critical Vol./Cap.(X):	0.796
Loss Time (sec):	0 (Y+R=4.0 sec)	Average Delay (sec/veh):	21.7
Optimal Cycle:	0	Level Of Service:	C

Street Name:	Monrovia Avenue						17th Street					
Approach:	North Bound			South Bound			East Bound			West Bound		
Movement:	L -	T -	R	L -	T -	R	L -	T -	R	L -	T -	R
Control:	Stop Sign			Stop Sign			Stop Sign			Stop Sign		
Rights:	Include			Include			Include			Include		
Min. Green:	0	0	0	0	0	0	0	0	0	0	0	0
Lanes:	0 0	1! 0	0	0 0	1! 0	0	0 0	1! 0	0	0 0	1! 0	0
Volume Module:												
Base Vol:	25	120	46	43	65	12	14	79	43	21	77	47
Growth Adj:	1.07	1.07	1.07	1.07	1.07	1.07	1.07	1.07	1.07	1.07	1.07	1.07
Initial Bse:	27	129	49	46	70	13	15	85	46	23	83	50
Added Vol:	0	51	50	-21	88	77	30	164	0	40	233	-8
Committed P:	0	0	0	0	0	0	0	0	0	0	0	0
Initial Fut:	27	180	99	25	158	90	45	249	46	63	316	42
User Adj:	1.00	1.00	1.00	1.00	1.00	1.00	1.00	1.00	1.00	1.00	1.00	1.00
PHF Adj:	1.00	1.00	1.00	1.00	1.00	1.00	1.00	1.00	1.00	1.00	1.00	1.00
PHF Volume:	27	180	99	25	158	90	45	249	46	63	316	42
Reduct Vol:	0	0	0	0	0	0	0	0	0	0	0	0
Reduced Vol:	27	180	99	25	158	90	45	249	46	63	316	42
PCE Adj:	1.00	1.00	1.00	1.00	1.00	1.00	1.00	1.00	1.00	1.00	1.00	1.00
MLF Adj:	1.00	1.00	1.00	1.00	1.00	1.00	1.00	1.00	1.00	1.00	1.00	1.00
FinalVolume:	27	180	99	25	158	90	45	249	46	63	316	42
Saturation Flow Module:												
Adjustment:	1.00	1.00	1.00	1.00	1.00	1.00	1.00	1.00	1.00	1.00	1.00	1.00
Lanes:	0.09	0.59	0.32	0.09	0.58	0.33	0.13	0.73	0.14	0.15	0.75	0.10
Final Sat.:	42	283	157	43	270	154	66	366	68	78	396	53
Capacity Analysis Module:												
Vol/Sat:	0.63	0.63	0.63	0.58	0.58	0.58	0.68	0.68	0.68	0.80	0.80	0.80
Crit Moves:			****		****				****			****
Delay/Veh:	18.7	18.7	18.7	17.2	17.2	17.2	20.6	20.6	20.6	27.8	27.8	27.8
Delay Adj:	1.00	1.00	1.00	1.00	1.00	1.00	1.00	1.00	1.00	1.00	1.00	1.00
AdjDel/Veh:	18.7	18.7	18.7	17.2	17.2	17.2	20.6	20.6	20.6	27.8	27.8	27.8
LOS by Move:	C	C	C	C	C	C	C	C	C	D	D	D
ApproachDel:	18.7			17.2			20.6			27.8		
Delay Adj:	1.00			1.00			1.00			1.00		
ApprAdjDel:	18.7			17.2			20.6			27.8		
LOS by Appr:	C			C			C			D		
AllWayAvgQ:	1.2	1.2	1.2	0.9	0.9	0.9	1.5	1.5	1.5	2.7	2.7	2.7

Newport Banning Ranch
Year 2016 Cumulative Conditions with Project
PM Peak Hour

Note: Queue reported is the number of cars per lane.

Newport Banning Ranch
Year 2016 Cumulative Conditions with Project
PM Peak Hour

Level Of Service Computation Report
ICU 1(Loss as Cycle Length %) Method (Future Volume Alternative)

Intersection #41 Placentia Ave/17th St

Cycle (sec):	100	Critical Vol./Cap.(X):	0.735
Loss Time (sec):	0 (Y+R=4.0 sec)	Average Delay (sec/veh):	xxxxxx
Optimal Cycle:	54	Level Of Service:	C

Street Name:	Placentia Avenue						17th St					
Approach:	North Bound			South Bound			East Bound			West Bound		
Movement:	L - T - R			L - T - R			L - T - R			L - T - R		
Control:	Permitted			Permitted			Permitted			Permitted		
Rights:	Include			Include			Include			Include		
Min. Green:	0	0	0	0	0	0	0	0	0	0	0	0
Lanes:	1 0 1	1 0		1 0 1	1 0		1 0 0	1 0		1 0 0	1 0	
Volume Module:												
Base Vol:	49	668	69	113	387	26	52	151	34	37	108	187
Growth Adj:	1.07	1.07	1.07	1.07	1.07	1.07	1.07	1.07	1.07	1.07	1.07	1.07
Initial Bse:	53	716	74	121	415	28	56	162	36	40	116	200
Added Vol:	-8	6	15	0	-49	71	65	149	-21	13	203	0
Committed P:	4	15	4	0	4	0	0	0	2	0	0	0
Initial Fut:	49	737	93	121	370	99	121	311	17	53	319	200
User Adj:	1.00	1.00	1.00	1.00	1.00	1.00	1.00	1.00	1.00	1.00	1.00	1.00
PHF Adj:	1.00	1.00	1.00	1.00	1.00	1.00	1.00	1.00	1.00	1.00	1.00	1.00
PHF Volume:	49	737	93	121	370	99	121	311	17	53	319	200
Reduct Vol:	0	0	0	0	0	0	0	0	0	0	0	0
Reduced Vol:	49	737	93	121	370	99	121	311	17	53	319	200
PCE Adj:	1.00	1.00	1.00	1.00	1.00	1.00	1.00	1.00	1.00	1.00	1.00	1.00
MLF Adj:	1.00	1.00	1.00	1.00	1.00	1.00	1.00	1.00	1.00	1.00	1.00	1.00
FinalVolume:	49	737	93	121	370	99	121	311	17	53	319	200
Saturation Flow Module:												
Sat/Lane:	1600	1600	1600	1600	1600	1600	1600	1600	1600	1600	1600	1600
Adjustment:	1.00	1.00	1.00	1.00	1.00	1.00	1.00	1.00	1.00	1.00	1.00	1.00
Lanes:	1.00	1.78	0.22	1.00	1.58	0.42	1.00	0.95	0.05	1.00	0.61	0.39
Final Sat.:	1600	2842	358	1600	2525	675	1600	1515	85	1600	982	618
Capacity Analysis Module:												
Vol/Sat:	0.03	0.26	0.26	0.08	0.15	0.15	0.08	0.21	0.21	0.03	0.32	0.32
Crit Moves:		****		****			****				****	

Newport Banning Ranch
Year 2016 Cumulative Conditions with Project
PM Peak Hour

Level Of Service Computation Report
2000 HCM 4-Way Stop Method (Future Volume Alternative)

Intersection #42 Pomona Ave/17th St

Cycle (sec): 100 Critical Vol./Cap.(X): 1.063
Loss Time (sec): 0 (Y+R=4.0 sec) Average Delay (sec/veh): 53.3
Optimal Cycle: 0 Level Of Service: F

Street Name:	Pomona Avenue						17th Street					
Approach:	North Bound			South Bound			East Bound			West Bound		
Movement:	L -	T -	R	L -	T -	R	L -	T -	R	L -	T -	R
Control:	Stop Sign			Stop Sign			Stop Sign			Stop Sign		
Rights:	Include			Include			Include			Include		
Min. Green:	0	0	0	0	0	0	0	0	0	0	0	0
Lanes:	0 0	1! 0	0	0 0	1! 0	0	1 0	0 1	0	1 0	1 0	1
Volume Module:												
Base Vol:	20	130	53	65	86	32	52	308	16	43	297	102
Growth Adj:	1.07	1.07	1.07	1.07	1.07	1.07	1.07	1.07	1.07	1.07	1.07	1.07
Initial Bse:	21	139	57	70	92	34	56	330	17	46	318	109
Added Vol:	0	2	0	12	4	0	0	152	0	0	212	10
Committed P:	0	0	0	0	0	0	0	0	0	0	0	0
Initial Fut:	21	141	57	82	96	34	56	482	17	46	530	119
User Adj:	1.00	1.00	1.00	1.00	1.00	1.00	1.00	1.00	1.00	1.00	1.00	1.00
PHF Adj:	1.00	1.00	1.00	1.00	1.00	1.00	1.00	1.00	1.00	1.00	1.00	1.00
PHF Volume:	21	141	57	82	96	34	56	482	17	46	530	119
Reduct Vol:	0	0	0	0	0	0	0	0	0	0	0	0
Reduced Vol:	21	141	57	82	96	34	56	482	17	46	530	119
PCE Adj:	1.00	1.00	1.00	1.00	1.00	1.00	1.00	1.00	1.00	1.00	1.00	1.00
MLF Adj:	1.00	1.00	1.00	1.00	1.00	1.00	1.00	1.00	1.00	1.00	1.00	1.00
FinalVolume:	21	141	57	82	96	34	56	482	17	46	530	119
Saturation Flow Module:												
Adjustment:	1.00	1.00	1.00	1.00	1.00	1.00	1.00	1.00	1.00	1.00	1.00	1.00
Lanes:	0.10	0.64	0.26	0.38	0.46	0.16	1.00	0.97	0.03	1.00	1.00	1.00
Final Sat.:	44	292	117	172	202	72	461	478	17	467	499	553
Capacity Analysis Module:												
Vol/Sat:	0.48	0.48	0.48	0.48	0.48	0.48	0.12	1.01	1.01	0.10	1.06	0.22
Crit Moves:			****	****					****		****	
Delay/Veh:	17.6	17.6	17.6	17.6	17.6	17.6	11.6	69.6	69.6	11.3	84.5	11.0
Delay Adj:	1.00	1.00	1.00	1.00	1.00	1.00	1.00	1.00	1.00	1.00	1.00	1.00
AdjDel/Veh:	17.6	17.6	17.6	17.6	17.6	17.6	11.6	69.6	69.6	11.3	84.5	11.0
LOS by Move:	C	C	C	C	C	C	B	F	F	B	F	B
ApproachDel:	17.6			17.6			63.8			67.0		
Delay Adj:	1.00			1.00			1.00			1.00		
ApprAdjDel:	17.6			17.6			63.8			67.0		
LOS by Appr:	C			C			F			F		
AllWayAvgQ:	0.9	0.9	0.9	0.8	0.8	0.8	0.1	8.2	8.2	0.1	10.3	0.3

Newport Banning Ranch
Year 2016 Cumulative Conditions with Project
PM Peak Hour

Note: Queue reported is the number of cars per lane.

Newport Banning Ranch
Year 2016 Cumulative Conditions with Project
PM Peak Hour

Level Of Service Computation Report
ICU 1(Loss as Cycle Length %) Method (Future Volume Alternative)

Intersection #43 Superior Ave/17th St

Cycle (sec):	100	Critical Vol./Cap.(X):	0.984
Loss Time (sec):	0 (Y+R=4.0 sec)	Average Delay (sec/veh):	xxxxxx
Optimal Cycle:	180	Level Of Service:	E

Street Name:	Superior Avenue						17th Street					
Approach:	North Bound			South Bound			East Bound			West Bound		
Movement:	L - T - R			L - T - R			L - T - R			L - T - R		
Control:	Prot+Permit			Prot+Permit			Prot+Permit			Prot+Permit		
Rights:	Include			Include			Include			Include		
Min. Green:	0	0	0	0	0	0	0	0	0	0	0	0
Lanes:	1 0 0 1 1			1 0 1 1 0			1 0 1 1 0			1 0 1 1 0		
Volume Module:												
Base Vol:	100	184	620	89	287	84	25	497	65	423	436	81
Growth Adj:	1.07	1.07	1.07	1.07	1.07	1.07	1.07	1.07	1.07	1.07	1.07	1.07
Initial Bse:	107	197	665	95	308	90	27	533	70	453	467	87
Added Vol:	0	6	100	0	15	0	0	152	0	147	212	0
Committed P:	3	25	0	0	101	0	0	0	11	0	0	0
Initial Fut:	110	228	765	95	424	90	27	685	81	600	679	87
User Adj:	1.00	1.00	1.00	1.00	1.00	1.00	1.00	1.00	1.00	1.00	1.00	1.00
PHF Adj:	1.00	1.00	1.00	1.00	1.00	1.00	1.00	1.00	1.00	1.00	1.00	1.00
PHF Volume:	110	228	765	95	424	90	27	685	81	600	679	87
Reduct Vol:	0	0	0	0	0	0	0	0	0	0	0	0
Reduced Vol:	110	228	765	95	424	90	27	685	81	600	679	87
PCE Adj:	1.00	1.00	1.00	1.00	1.00	1.00	1.00	1.00	1.00	1.00	1.00	1.00
MLF Adj:	1.00	1.00	1.00	1.00	1.00	1.00	1.00	1.00	1.00	1.00	1.00	1.00
FinalVolume:	110	228	765	95	424	90	27	685	81	600	679	87
Saturation Flow Module:												
Sat/Lane:	1600	1600	1600	1600	1600	1600	1600	1600	1600	1600	1600	1600
Adjustment:	1.00	1.00	1.00	1.00	1.00	1.00	1.00	1.00	1.00	1.00	1.00	1.00
Lanes:	1.00	0.46	1.54	1.00	1.65	0.35	1.00	1.79	0.21	1.00	1.77	0.23
Final Sat.:	1600	736	2464	1600	2639	561	1600	2863	337	1600	2837	363
Capacity Analysis Module:												
Vol/Sat:	0.07	0.31	0.31	0.06	0.16	0.16	0.02	0.24	0.24	0.38	0.24	0.24
Crit Moves:		****		****				****		****		

Newport Banning Ranch
Year 2016 Cumulative Conditions with Project
PM Peak Hour

Level Of Service Computation Report
ICU 1(Loss as Cycle Length %) Method (Future Volume Alternative)

Intersection #44 Newport Blvd/17th St

Cycle (sec):	120	Critical Vol./Cap.(X):	0.919
Loss Time (sec):	0 (Y+R=4.0 sec)	Average Delay (sec/veh):	xxxxxx
Optimal Cycle:	180	Level Of Service:	E

Street Name:	Newport Boulevard						17th Street					
Approach:	North Bound			South Bound			East Bound			West Bound		
Movement:	L - T - R			L - T - R			L - T - R			L - T - R		
Control:	Protected			Protected			Protected			Protected		
Rights:	Include			Include			Include			Include		
Min. Green:	0	0	0	0	0	0	0	0	0	0	0	0
Lanes:	1 0 3	1 0		2 0 3	0 1		3 0 1	1 0		2 0 3	0 1	
Volume Module:												
Base Vol:	63	1820	169	714	2315	347	707	393	22	276	485	201
Growth Adj:	1.07	1.07	1.07	1.07	1.07	1.07	1.07	1.07	1.07	1.07	1.07	1.07
Initial Bse:	68	1951	181	765	2482	372	758	421	24	296	520	215
Added Vol:	0	61	13	0	75	260	183	69	0	23	99	0
Committed P:	0	67	0	0	51	0	0	0	0	0	0	0
Initial Fut:	68	2079	194	765	2608	632	941	490	24	319	619	215
User Adj:	1.00	1.00	1.00	1.00	1.00	1.00	1.00	1.00	1.00	1.00	1.00	1.00
PHF Adj:	1.00	1.00	1.00	1.00	1.00	1.00	1.00	1.00	1.00	1.00	1.00	1.00
PHF Volume:	68	2079	194	765	2608	632	941	490	24	319	619	215
Reduct Vol:	0	0	0	0	0	0	0	0	0	0	0	0
Reduced Vol:	68	2079	194	765	2608	632	941	490	24	319	619	215
PCE Adj:	1.00	1.00	1.00	1.00	1.00	1.00	1.00	1.00	1.00	1.00	1.00	1.00
MLF Adj:	1.00	1.00	1.00	1.00	1.00	1.00	1.00	1.00	1.00	1.00	1.00	1.00
FinalVolume:	68	2079	194	765	2608	632	941	490	24	319	619	215
Saturation Flow Module:												
Sat/Lane:	1600	1600	1600	1600	1600	1600	1600	1600	1600	1600	1600	1600
Adjustment:	1.00	1.00	1.00	1.00	1.00	1.00	1.00	1.00	1.00	1.00	1.00	1.00
Lanes:	1.00	3.66	0.34	2.00	3.00	1.00	3.00	1.91	0.09	2.00	3.00	1.00
Final Sat.:	1600	5853	547	3200	4800	1600	4800	3053	147	3200	4800	1600
Capacity Analysis Module:												
Vol/Sat:	0.04	0.36	0.36	0.24	0.54	0.39	0.20	0.16	0.16	0.10	0.13	0.13
Crit Moves:		****		****			****				****	

Newport Banning Ranch
Year 2016 Cumulative Conditions with Project
PM Peak Hour

Level Of Service Computation Report
ICU 1(Loss as Cycle Length %) Method (Future Volume Alternative)

Intersection #45 Orange Ave/17th St

Cycle (sec):	100	Critical Vol./Cap.(X):	0.693
Loss Time (sec):	0 (Y+R=4.0 sec)	Average Delay (sec/veh):	xxxxxx
Optimal Cycle:	74	Level Of Service:	B

Street Name:	Orange Avenue						17th Street					
Approach:	North Bound			South Bound			East Bound			West Bound		
Movement:	L - T - R			L - T - R			L - T - R			L - T - R		
Control:	Prot+Permit			Prot+Permit			Prot+Permit			Prot+Permit		
Rights:	Include			Include			Include			Include		
Min. Green:	0	0	0	0	0	0	0	0	0	0	0	0
Lanes:	1 0 1	1 0		1 0 1	0 1		1 0 2	0 1		1 0 2	0 1	
Volume Module:												
Base Vol:	168	276	68	214	204	121	140	910	157	83	895	198
Growth Adj:	1.07	1.07	1.07	1.07	1.07	1.07	1.07	1.07	1.07	1.07	1.07	1.07
Initial Bse:	180	296	73	229	219	130	150	976	168	89	959	212
Added Vol:	0	0	0	0	0	0	0	82	0	0	122	0
Committed P:	0	0	2	2	0	0	0	5	0	1	4	1
Initial Fut:	180	296	75	231	219	130	150	1063	168	90	1085	213
User Adj:	1.00	1.00	1.00	1.00	1.00	1.00	1.00	1.00	1.00	1.00	1.00	1.00
PHF Adj:	1.00	1.00	1.00	1.00	1.00	1.00	1.00	1.00	1.00	1.00	1.00	1.00
PHF Volume:	180	296	75	231	219	130	150	1063	168	90	1085	213
Reduct Vol:	0	0	0	0	0	0	0	0	0	0	0	0
Reduced Vol:	180	296	75	231	219	130	150	1063	168	90	1085	213
PCE Adj:	1.00	1.00	1.00	1.00	1.00	1.00	1.00	1.00	1.00	1.00	1.00	1.00
MLF Adj:	1.00	1.00	1.00	1.00	1.00	1.00	1.00	1.00	1.00	1.00	1.00	1.00
FinalVolume:	180	296	75	231	219	130	150	1063	168	90	1085	213
Saturation Flow Module:												
Sat/Lane:	1600	1600	1600	1600	1600	1600	1600	1600	1600	1600	1600	1600
Adjustment:	1.00	1.00	1.00	1.00	1.00	1.00	1.00	1.00	1.00	1.00	1.00	1.00
Lanes:	1.00	1.60	0.40	1.00	1.00	1.00	1.00	2.00	1.00	1.00	2.00	1.00
Final Sat.:	1600	2554	646	1600	1600	1600	1600	3200	1600	1600	3200	1600
Capacity Analysis Module:												
Vol/Sat:	0.11	0.12	0.12	0.14	0.14	0.08	0.09	0.33	0.11	0.06	0.34	0.13
Crit Moves:		****		****			****				****	

Newport Banning Ranch
Year 2016 Cumulative Conditions with Project
PM Peak Hour

Level Of Service Computation Report
ICU 1(Loss as Cycle Length %) Method (Future Volume Alternative)

Intersection #46 Santa Ana Ave/17th St

Cycle (sec):	100	Critical Vol./Cap.(X):	0.684
Loss Time (sec):	0 (Y+R=4.0 sec)	Average Delay (sec/veh):	xxxxxx
Optimal Cycle:	59	Level Of Service:	B

Street Name:	Santa Ana Avenue						17th Street					
Approach:	North Bound			South Bound			East Bound			West Bound		
Movement:	L - T - R			L - T - R			L - T - R			L - T - R		
Control:	Permitted			Permitted			Prot+Permit			Prot+Permit		
Rights:	Include			Include			Include			Include		
Min. Green:	0	0	0	0	0	0	0	0	0	0	0	0
Lanes:	1 0 1	0 1		1 0 1	0 1		1 0 2	0 1		1 0 2	0 1	
Volume Module:												
Base Vol:	126	173	94	115	170	88	96	937	69	147	1137	130
Growth Adj:	1.07	1.07	1.07	1.07	1.07	1.07	1.07	1.07	1.07	1.07	1.07	1.07
Initial Bse:	135	185	101	123	182	94	103	1004	74	158	1219	139
Added Vol:	0	0	0	0	0	0	0	91	0	0	127	0
Committed P:	0	0	5	5	0	0	0	12	0	3	9	3
Initial Fut:	135	185	106	128	182	94	103	1107	74	161	1355	142
User Adj:	1.00	1.00	1.00	1.00	1.00	1.00	1.00	1.00	1.00	1.00	1.00	1.00
PHF Adj:	1.00	1.00	1.00	1.00	1.00	1.00	1.00	1.00	1.00	1.00	1.00	1.00
PHF Volume:	135	185	106	128	182	94	103	1107	74	161	1355	142
Reduct Vol:	0	0	0	0	0	0	0	0	0	0	0	0
Reduced Vol:	135	185	106	128	182	94	103	1107	74	161	1355	142
PCE Adj:	1.00	1.00	1.00	1.00	1.00	1.00	1.00	1.00	1.00	1.00	1.00	1.00
MLF Adj:	1.00	1.00	1.00	1.00	1.00	1.00	1.00	1.00	1.00	1.00	1.00	1.00
FinalVolume:	135	185	106	128	182	94	103	1107	74	161	1355	142
Saturation Flow Module:												
Sat/Lane:	1600	1600	1600	1600	1600	1600	1600	1600	1600	1600	1600	1600
Adjustment:	1.00	1.00	1.00	1.00	1.00	1.00	1.00	1.00	1.00	1.00	1.00	1.00
Lanes:	1.00	1.00	1.00	1.00	1.00	1.00	1.00	2.00	1.00	1.00	2.00	1.00
Final Sat.:	1600	1600	1600	1600	1600	1600	1600	3200	1600	1600	3200	1600
Capacity Analysis Module:												
Vol/Sat:	0.08	0.12	0.07	0.08	0.11	0.06	0.06	0.35	0.05	0.10	0.42	0.09
Crit Moves:		****		****			****				****	

Newport Banning Ranch
Year 2016 Cumulative Conditions with Project
PM Peak Hour

Level Of Service Computation Report
ICU 1(Loss as Cycle Length %) Method (Future Volume Alternative)

Intersection #47 Tustin Ave/17th St

Cycle (sec):	100	Critical Vol./Cap.(X):	0.739
Loss Time (sec):	0 (Y+R=4.0 sec)	Average Delay (sec/veh):	xxxxxx
Optimal Cycle:	71	Level Of Service:	C

Street Name:	Tustin Avenue						17th Street					
Approach:	North Bound			South Bound			East Bound			West Bound		
Movement:	L - T - R			L - T - R			L - T - R			L - T - R		
Control:	Permitted			Permitted			Prot+Permit			Prot+Permit		
Rights:	Include			Include			Include			Include		
Min. Green:	0	0	0	0	0	0	0	0	0	0	0	0
Lanes:	1 0 0 1 0			1 0 1 0 1			1 0 1 1 0			1 0 1 1 0		
Volume Module:												
Base Vol:	124	157	83	77	111	56	46	996	62	76	1243	82
Growth Adj:	1.07	1.07	1.07	1.07	1.07	1.07	1.07	1.07	1.07	1.07	1.07	1.07
Initial Bse:	133	168	89	83	119	60	49	1068	66	81	1332	88
Added Vol:	0	0	0	0	0	0	0	91	0	0	127	0
Committed P:	0	0	5	5	0	0	0	30	0	3	17	3
Initial Fut:	133	168	94	88	119	60	49	1189	66	84	1476	91
User Adj:	1.00	1.00	1.00	1.00	1.00	1.00	1.00	1.00	1.00	1.00	1.00	1.00
PHF Adj:	1.00	1.00	1.00	1.00	1.00	1.00	1.00	1.00	1.00	1.00	1.00	1.00
PHF Volume:	133	168	94	88	119	60	49	1189	66	84	1476	91
Reduct Vol:	0	0	0	0	0	0	0	0	0	0	0	0
Reduced Vol:	133	168	94	88	119	60	49	1189	66	84	1476	91
PCE Adj:	1.00	1.00	1.00	1.00	1.00	1.00	1.00	1.00	1.00	1.00	1.00	1.00
MLF Adj:	1.00	1.00	1.00	1.00	1.00	1.00	1.00	1.00	1.00	1.00	1.00	1.00
FinalVolume:	133	168	94	88	119	60	49	1189	66	84	1476	91
Saturation Flow Module:												
Sat/Lane:	1600	1600	1600	1600	1600	1600	1600	1600	1600	1600	1600	1600
Adjustment:	1.00	1.00	1.00	1.00	1.00	1.00	1.00	1.00	1.00	1.00	1.00	1.00
Lanes:	1.00	0.64	0.36	1.00	1.00	1.00	1.00	1.89	0.11	1.00	1.88	0.12
Final Sat.:	1600	1027	573	1600	1600	1600	1600	3031	169	1600	3014	186
Capacity Analysis Module:												
Vol/Sat:	0.08	0.16	0.16	0.05	0.07	0.04	0.03	0.39	0.39	0.05	0.49	0.49
Crit Moves:		****		****			****				****	

Newport Banning Ranch
Year 2016 Cumulative Conditions with Project
PM Peak Hour

Level Of Service Computation Report
ICU 1(Loss as Cycle Length %) Method (Future Volume Alternative)

Intersection #48 Irvine Ave/17th St

Cycle (sec):	100	Critical Vol./Cap.(X):	0.729
Loss Time (sec):	0 (Y+R=4.0 sec)	Average Delay (sec/veh):	xxxxxx
Optimal Cycle:	84	Level Of Service:	C

Street Name:	Irvine Avenue						17th Street					
Approach:	North Bound			South Bound			East Bound			West Bound		
Movement:	L - T - R			L - T - R			L - T - R			L - T - R		
Control:	Protected			Protected			Protected			Protected		
Rights:	Include			Include			Include			Include		
Min. Green:	0	0	0	0	0	0	0	0	0	0	0	0
Lanes:	2 0 2	0 1		2 0 2	0 1		2 0 1	1 0		1 0 1	1 0	
Volume Module:												
Base Vol:	373	623	49	168	528	334	233	570	200	101	646	61
Growth Adj:	1.07	1.07	1.07	1.07	1.07	1.07	1.07	1.07	1.07	1.07	1.07	1.07
Initial Bse:	400	668	53	180	566	358	250	611	214	108	693	65
Added Vol:	6	3	37	2	1	0	0	85	6	22	121	6
Committed P:	0	0	0	8	0	0	14	35	0	0	23	0
Initial Fut:	406	671	90	190	567	358	264	731	220	130	837	71
User Adj:	1.00	1.00	1.00	1.00	1.00	1.00	1.00	1.00	1.00	1.00	1.00	1.00
PHF Adj:	1.00	1.00	1.00	1.00	1.00	1.00	1.00	1.00	1.00	1.00	1.00	1.00
PHF Volume:	406	671	90	190	567	358	264	731	220	130	837	71
Reduct Vol:	0	0	0	0	0	0	0	0	0	0	0	0
Reduced Vol:	406	671	90	190	567	358	264	731	220	130	837	71
PCE Adj:	1.00	1.00	1.00	1.00	1.00	1.00	1.00	1.00	1.00	1.00	1.00	1.00
MLF Adj:	1.00	1.00	1.00	1.00	1.00	1.00	1.00	1.00	1.00	1.00	1.00	1.00
FinalVolume:	406	671	90	190	567	358	264	731	220	130	837	71
Saturation Flow Module:												
Sat/Lane:	1600	1600	1600	1600	1600	1600	1600	1600	1600	1600	1600	1600
Adjustment:	1.00	1.00	1.00	1.00	1.00	1.00	1.00	1.00	1.00	1.00	1.00	1.00
Lanes:	2.00	2.00	1.00	2.00	2.00	1.00	2.00	1.54	0.46	1.00	1.84	0.16
Final Sat.:	3200	3200	1600	3200	3200	1600	3200	2459	741	1600	2948	252
Capacity Analysis Module:												
Vol/Sat:	0.13	0.21	0.06	0.06	0.18	0.22	0.08	0.30	0.30	0.08	0.28	0.28
Crit Moves:	****					****		****		****		

Newport Banning Ranch
Year 2016 Cumulative Conditions with Project
PM Peak Hour

Level Of Service Computation Report
ICU 1(Loss as Cycle Length %) Method (Future Volume Alternative)

Intersection #49 Placentia Ave/16th St

Cycle (sec):	100	Critical Vol./Cap.(X):	0.441
Loss Time (sec):	0 (Y+R=4.0 sec)	Average Delay (sec/veh):	xxxxxx
Optimal Cycle:	26	Level Of Service:	A

Street Name:	Placentia Avenue						16th Street					
Approach:	North Bound			South Bound			East Bound			West Bound		
Movement:	L - T - R			L - T - R			L - T - R			L - T - R		
Control:	Permitted			Permitted			Permitted			Permitted		
Rights:	Include			Include			Include			Include		
Min. Green:	0	0	0	0	0	0	0	0	0	0	0	0
Lanes:	1 0 1	1 0		1 0 1	1 0		1 0 0	1 0		1 0 0	1 0	
Volume Module:												
Base Vol:	34	530	22	21	381	20	64	42	59	21	28	82
Growth Adj:	1.07	1.07	1.07	1.07	1.07	1.07	1.07	1.07	1.07	1.07	1.07	1.07
Initial Bse:	36	568	24	23	408	21	69	45	63	23	30	88
Added Vol:	-8	-18	0	0	-125	69	31	89	-21	0	165	0
Committed P:	0	28	0	0	9	0	0	0	0	0	0	0
Initial Fut:	28	578	24	23	292	90	100	134	42	23	195	88
User Adj:	1.00	1.00	1.00	1.00	1.00	1.00	1.00	1.00	1.00	1.00	1.00	1.00
PHF Adj:	1.00	1.00	1.00	1.00	1.00	1.00	1.00	1.00	1.00	1.00	1.00	1.00
PHF Volume:	28	578	24	23	292	90	100	134	42	23	195	88
Reduct Vol:	0	0	0	0	0	0	0	0	0	0	0	0
Reduced Vol:	28	578	24	23	292	90	100	134	42	23	195	88
PCE Adj:	1.00	1.00	1.00	1.00	1.00	1.00	1.00	1.00	1.00	1.00	1.00	1.00
MLF Adj:	1.00	1.00	1.00	1.00	1.00	1.00	1.00	1.00	1.00	1.00	1.00	1.00
FinalVolume:	28	578	24	23	292	90	100	134	42	23	195	88
Saturation Flow Module:												
Sat/Lane:	1600	1600	1600	1600	1600	1600	1600	1600	1600	1600	1600	1600
Adjustment:	1.00	1.00	1.00	1.00	1.00	1.00	1.00	1.00	1.00	1.00	1.00	1.00
Lanes:	1.00	1.92	0.08	1.00	1.53	0.47	1.00	0.76	0.24	1.00	0.69	0.31
Final Sat.:	1600	3075	125	1600	2444	756	1600	1217	383	1600	1103	497
Capacity Analysis Module:												
Vol/Sat:	0.02	0.19	0.19	0.01	0.12	0.12	0.06	0.11	0.11	0.01	0.18	0.18
Crit Moves:		****		****			****				****	

Newport Banning Ranch
Year 2016 Cumulative Conditions with Project
PM Peak Hour

Level Of Service Computation Report
ICU 1(Loss as Cycle Length %) Method (Future Volume Alternative)

Intersection #50 Superior Ave/16th St

Cycle (sec):	100	Critical Vol./Cap.(X):	0.577
Loss Time (sec):	0 (Y+R=4.0 sec)	Average Delay (sec/veh):	xxxxxx
Optimal Cycle:	34	Level Of Service:	A

Street Name:	Superior Avenue						16th Street					
Approach:	North Bound			South Bound			East Bound			West Bound		
Movement:	L - T - R			L - T - R			L - T - R			L - T - R		
Control:	Permitted			Permitted			Permitted			Permitted		
Rights:	Include			Include			Include			Include		
Min. Green:	0	0	0	0	0	0	0	0	0	0	0	0
Lanes:	1 0 2 0 1			1 0 1 1 0			1 0 0 1 0			0 1 0 0 1		
Volume Module:												
Base Vol:	23	699	23	25	864	43	30	94	0	16	87	14
Growth Adj:	1.07	1.07	1.07	1.07	1.07	1.07	1.07	1.07	1.07	1.07	1.07	1.07
Initial Bse:	25	749	25	27	926	46	32	101	0	17	93	15
Added Vol:	0	78	0	0	97	74	36	51	0	0	88	0
Committed P:	2	34	0	0	118	0	0	0	3	0	0	0
Initial Fut:	27	861	25	27	1141	120	68	152	3	17	181	15
User Adj:	1.00	1.00	1.00	1.00	1.00	1.00	1.00	1.00	1.00	1.00	1.00	1.00
PHF Adj:	1.00	1.00	1.00	1.00	1.00	1.00	1.00	1.00	1.00	1.00	1.00	1.00
PHF Volume:	27	861	25	27	1141	120	68	152	3	17	181	15
Reduct Vol:	0	0	0	0	0	0	0	0	0	0	0	0
Reduced Vol:	27	861	25	27	1141	120	68	152	3	17	181	15
PCE Adj:	1.00	1.00	1.00	1.00	1.00	1.00	1.00	1.00	1.00	1.00	1.00	1.00
MLF Adj:	1.00	1.00	1.00	1.00	1.00	1.00	1.00	1.00	1.00	1.00	1.00	1.00
FinalVolume:	27	861	25	27	1141	120	68	152	3	17	181	15
Saturation Flow Module:												
Sat/Lane:	1600	1600	1600	1600	1600	1600	1600	1600	1600	1600	1600	1600
Adjustment:	1.00	1.00	1.00	1.00	1.00	1.00	1.00	1.00	1.00	1.00	1.00	1.00
Lanes:	1.00	2.00	1.00	1.00	1.81	0.19	1.00	0.98	0.02	0.09	0.91	1.00
Final Sat.:	1600	3200	1600	1600	2895	305	1600	1569	31	138	1462	1600
Capacity Analysis Module:												
Vol/Sat:	0.02	0.27	0.02	0.02	0.39	0.39	0.04	0.10	0.10	0.01	0.12	0.01
Crit Moves:	****				****		****				****	

Newport Banning Ranch
Year 2016 Cumulative Conditions with Project
PM Peak Hour

Level Of Service Computation Report
ICU 1(Loss as Cycle Length %) Method (Future Volume Alternative)

Intersection #51 Newport Blvd/16th St

Cycle (sec):	120	Critical Vol./Cap.(X):	0.619
Loss Time (sec):	0 (Y+R=4.0 sec)	Average Delay (sec/veh):	xxxxxx
Optimal Cycle:	49	Level Of Service:	B

Street Name:	Newport Boulevard						16th Street					
Approach:	North Bound			South Bound			East Bound			West Bound		
Movement:	L - T - R			L - T - R			L - T - R			L - T - R		
Control:	Protected			Protected			Permitted			Permitted		
Rights:	Include			Include			Include			Include		
Min. Green:	0	0	0	0	0	0	0	0	0	0	0	0
Lanes:	1 0 2	1 0		1 0 3	0 1		0 0 1!	0 0		0 0 1!	0 0	
Volume Module:												
Base Vol:	20	1402	50	85	2084	29	36	48	21	20	37	59
Growth Adj:	1.07	1.07	1.07	1.07	1.07	1.07	1.07	1.07	1.07	1.07	1.07	1.07
Initial Bse:	21	1503	54	91	2234	31	39	51	23	21	40	63
Added Vol:	0	74	0	0	98	0	0	0	0	0	0	0
Committed P:	3	67	12	0	51	0	0	0	5	9	0	0
Initial Fut:	24	1644	66	91	2383	31	39	51	28	30	40	63
User Adj:	1.00	1.00	1.00	1.00	1.00	1.00	1.00	1.00	1.00	1.00	1.00	1.00
PHF Adj:	1.00	1.00	1.00	1.00	1.00	1.00	1.00	1.00	1.00	1.00	1.00	1.00
PHF Volume:	24	1644	66	91	2383	31	39	51	28	30	40	63
Reduct Vol:	0	0	0	0	0	0	0	0	0	0	0	0
Reduced Vol:	24	1644	66	91	2383	31	39	51	28	30	40	63
PCE Adj:	1.00	1.00	1.00	1.00	1.00	1.00	1.00	1.00	1.00	1.00	1.00	1.00
MLF Adj:	1.00	1.00	1.00	1.00	1.00	1.00	1.00	1.00	1.00	1.00	1.00	1.00
FinalVolume:	24	1644	66	91	2383	31	39	51	28	30	40	63
Saturation Flow Module:												
Sat/Lane:	1600	1600	1600	1600	1600	1600	1600	1600	1600	1600	1600	1600
Adjustment:	1.00	1.00	1.00	1.00	1.00	1.00	1.00	1.00	1.00	1.00	1.00	1.00
Lanes:	1.00	2.88	0.12	1.00	3.00	1.00	0.33	0.44	0.23	0.23	0.30	0.47
Final Sat.:	1600	4616	184	1600	4800	1600	525	700	374	365	476	759
Capacity Analysis Module:												
Vol/Sat:	0.02	0.36	0.36	0.06	0.50	0.02	0.02	0.07	0.07	0.02	0.08	0.08
Crit Moves:	****				****		****				****	

Newport Banning Ranch
Year 2016 Cumulative Conditions with Project
PM Peak Hour

Level Of Service Computation Report
ICU 1(Loss as Cycle Length %) Method (Future Volume Alternative)

Intersection #52 Bluff Rd/Victoria St

Cycle (sec):	100	Critical Vol./Cap.(X):	0.582
Loss Time (sec):	0 (Y+R=4.0 sec)	Average Delay (sec/veh):	xxxxxx
Optimal Cycle:	55	Level Of Service:	A

Street Name:	Bluff Road						Victoria St					
Approach:	North Bound			South Bound			East Bound			West Bound		
Movement:	L - T - R			L - T - R			L - T - R			L - T - R		
Control:	Protected			Protected			Protected			Protected		
Rights:	Include			Include			Include			Include		
Min. Green:	0	0	0	0	0	0	0	0	0	0	0	0
Lanes:	0 0 0 0 0			0 0 0 0 0			0 0 2 0 0			0 0 2 0 0		
Volume Module:												
Base Vol:	0	0	0	0	0	0	0	942	0	0	1709	0
Growth Adj:	1.00	1.00	1.00	1.00	1.00	1.00	1.00	1.07	1.00	1.00	1.07	1.00
Initial Bse:	0	0	0	0	0	0	0	1010	0	0	1832	0
Added Vol:	0	0	0	0	0	0	0	35	0	0	30	0
PasserByVol:	0	0	0	0	0	0	0	0	0	0	0	0
Initial Fut:	0	0	0	0	0	0	0	1045	0	0	1862	0
User Adj:	1.00	1.00	1.00	1.00	1.00	1.00	1.00	1.00	1.00	1.00	1.00	1.00
PHF Adj:	1.00	1.00	1.00	1.00	1.00	1.00	1.00	1.00	1.00	1.00	1.00	1.00
PHF Volume:	0	0	0	0	0	0	0	1045	0	0	1862	0
Reduct Vol:	0	0	0	0	0	0	0	0	0	0	0	0
Reduced Vol:	0	0	0	0	0	0	0	1045	0	0	1862	0
PCE Adj:	1.00	1.00	1.00	1.00	1.00	1.00	1.00	1.00	1.00	1.00	1.00	1.00
MLF Adj:	1.00	1.00	1.00	1.00	1.00	1.00	1.00	1.00	1.00	1.00	1.00	1.00
FinalVolume:	0	0	0	0	0	0	0	1045	0	0	1862	0
Saturation Flow Module:												
Sat/Lane:	1600	1600	1600	1600	1600	1600	1600	1600	1600	1600	1600	1600
Adjustment:	1.00	1.00	1.00	1.00	1.00	1.00	1.00	1.00	1.00	1.00	1.00	1.00
Lanes:	0.00	0.00	0.00	0.00	0.00	0.00	0.00	2.00	0.00	0.00	2.00	0.00
Final Sat.:	0	0	0	0	0	0	0	3200	0	0	3200	0
Capacity Analysis Module:												
Vol/Sat:	0.00	0.00	0.00	0.00	0.00	0.00	0.00	0.33	0.00	0.00	0.58	0.00
Crit Moves:							****				****	

Newport Banning Ranch
Year 2016 Cumulative Conditions with Project
PM Peak Hour

Level Of Service Computation Report
ICU 1(Loss as Cycle Length %) Method (Future Volume Alternative)

Intersection #53 Bluff Rd/19th St

Cycle (sec):	100	Critical Vol./Cap.(X):	0.114
Loss Time (sec):	0 (Y+R=4.0 sec)	Average Delay (sec/veh):	xxxxxx
Optimal Cycle:	16	Level Of Service:	A

Street Name:	Bluff Rd						19th Street					
Approach:	North Bound			South Bound			East Bound			West Bound		
Movement:	L - T - R			L - T - R			L - T - R			L - T - R		
Control:	Permitted			Permitted			Permitted			Permitted		
Rights:	Include			Include			Include			Include		
Min. Green:	0	0	0	0	0	0	0	0	0	0	0	0
Lanes:	0 0 1	0	1	0 1	0	0	0 0 0	0	0	1 0	0	0
Volume Module:												
Base Vol:	0	0	0	0	0	0	0	0	0	0	0	0
Growth Adj:	1.00	1.00	1.00	1.00	1.00	1.00	1.00	1.00	1.00	1.00	1.00	1.00
Initial Bse:	0	0	0	0	0	0	0	0	0	0	0	0
Added Vol:	0	0	69	0	0	0	0	0	0	114	0	0
PasserByVol:	0	0	0	0	0	0	0	0	0	0	0	0
Initial Fut:	0	0	69	0	0	0	0	0	0	114	0	0
User Adj:	1.00	1.00	1.00	1.00	1.00	1.00	1.00	1.00	1.00	1.00	1.00	1.00
PHF Adj:	1.00	1.00	1.00	1.00	1.00	1.00	1.00	1.00	1.00	1.00	1.00	1.00
PHF Volume:	0	0	69	0	0	0	0	0	0	114	0	0
Reduct Vol:	0	0	0	0	0	0	0	0	0	0	0	0
Reduced Vol:	0	0	69	0	0	0	0	0	0	114	0	0
PCE Adj:	1.00	1.00	1.00	1.00	1.00	1.00	1.00	1.00	1.00	1.00	1.00	1.00
MLF Adj:	1.00	1.00	1.00	1.00	1.00	1.00	1.00	1.00	1.00	1.00	1.00	1.00
FinalVolume:	0	0	69	0	0	0	0	0	0	114	0	0
Saturation Flow Module:												
Sat/Lane:	1600	1600	1600	1600	1600	1600	1600	1600	1600	1600	1600	1600
Adjustment:	1.00	1.00	1.00	1.00	1.00	1.00	1.00	1.00	1.00	1.00	1.00	1.00
Lanes:	0.00	1.00	1.00	0.00	1.00	0.00	0.00	0.00	0.00	1.00	0.00	0.00
Final Sat.:	0	1600	1600	0	1600	0	0	0	0	1600	0	0
Capacity Analysis Module:												
Vol/Sat:	0.00	0.00	0.04	0.00	0.00	0.00	0.00	0.00	0.00	0.07	0.00	0.00
Crit Moves:			****							****		

Newport Banning Ranch
Year 2016 Cumulative Conditions with Project
PM Peak Hour

Level Of Service Computation Report
ICU 1(Loss as Cycle Length %) Method (Future Volume Alternative)

Intersection #54 Bluff Rd/17th St

Cycle (sec):	100	Critical Vol./Cap.(X):	0.207
Loss Time (sec):	0 (Y+R=4.0 sec)	Average Delay (sec/veh):	xxxxxx
Optimal Cycle:	18	Level Of Service:	A

Street Name:	Bluff Road						17th Street					
Approach:	North Bound			South Bound			East Bound			West Bound		
Movement:	L - T - R			L - T - R			L - T - R			L - T - R		
Control:	Permitted			Permitted			Permitted			Permitted		
Rights:	Include			Include			Include			Include		
Min. Green:	0	0	0	0	0	0	0	0	0	0	0	0
Lanes:	1 0 1	1 0		1 0 0	1 0		0 0 1!	0 0		1 0 1	0 1	
Volume Module:												
Base Vol:	0	0	0	0	0	0	0	0	0	0	0	0
Growth Adj:	1.00	1.00	1.00	1.00	1.00	1.00	1.00	1.00	1.00	1.00	1.00	1.00
Initial Bse:	0	0	0	0	0	0	0	0	0	0	0	0
Added Vol:	0	111	70	0	125	11	6	1	0	156	1	0
Internal Ca:	5	3	3	0	6	7	5	3	3	3	2	0
Initial Fut:	5	114	73	0	131	18	11	4	3	159	3	0
User Adj:	1.00	1.00	1.00	1.00	1.00	1.00	1.00	1.00	1.00	1.00	1.00	1.00
PHF Adj:	1.00	1.00	1.00	1.00	1.00	1.00	1.00	1.00	1.00	1.00	1.00	1.00
PHF Volume:	5	114	73	0	131	18	11	4	3	159	3	0
Reduct Vol:	0	0	0	0	0	0	0	0	0	0	0	0
Reduced Vol:	5	114	73	0	131	18	11	4	3	159	3	0
PCE Adj:	1.00	1.00	1.00	1.00	1.00	1.00	1.00	1.00	1.00	1.00	1.00	1.00
MLF Adj:	1.00	1.00	1.00	1.00	1.00	1.00	1.00	1.00	1.00	1.00	1.00	1.00
FinalVolume:	5	114	73	0	131	18	11	4	3	159	3	0
Saturation Flow Module:												
Sat/Lane:	1600	1600	1600	1600	1600	1600	1600	1600	1600	1600	1600	1600
Adjustment:	1.00	1.00	1.00	1.00	1.00	1.00	1.00	1.00	1.00	1.00	1.00	1.00
Lanes:	1.00	1.22	0.78	1.00	0.88	0.12	0.61	0.22	0.17	1.00	1.00	1.00
Final Sat.:	1600	1951	1249	1600	1407	193	978	356	267	1600	1600	1600
Capacity Analysis Module:												
Vol/Sat:	0.00	0.06	0.06	0.00	0.09	0.09	0.01	0.01	0.01	0.10	0.00	0.00
Crit Moves:	****				****			****		****		

Newport Banning Ranch
Year 2016 Cumulative Conditions with Project
PM Peak Hour

Level Of Service Computation Report
2000 HCM Unsignalized Method (Future Volume Alternative)

Intersection #55 Bluff Rd/16th St

Average Delay (sec/veh): 5.4 Worst Case Level Of Service: C[19.3]

Street Name:	Bluff Road									16th Street								
Approach:	North Bound					South Bound				East Bound					West Bound			
Movement:	L	-	T	-	R	L	-	T	-	R	L	-	T	-	R	L	-	T	-	R
Control:	Uncontrolled					Uncontrolled					Stop Sign					Stop Sign				
Rights:	Include					Include					Include					Include				
Lanes:	1	0	1	1	0	1	0	1	1	0	0	0	1!	0	0	0	0	1!	0	0
Volume Module:																				
Base Vol:	0	0	0	0	0	0	0	0	0	0	0	0	0	0	0	0	0	0	0	0
Growth Adj:	1.00	1.00	1.00	1.00	1.00	1.00	1.00	1.00	1.00	1.00	1.00	1.00	1.00	1.00	1.00	1.00	1.00	1.00	1.00	1.00
Initial Bse:	0	0	0	0	0	0	0	0	0	0	0	0	0	0	0	0	0	0	0	0
Added Vol:	25	281	33	63	310	0	0	14	14	81	25	113								
Internal Ca:	0	9	0	0	12	4	2	0	0	0	0	0								
Initial Fut:	25	290	33	63	322	4	2	14	14	81	25	113								
User Adj:	1.00	1.00	1.00	1.00	1.00	1.00	1.00	1.00	1.00	1.00	1.00	1.00								
PHF Adj:	1.00	1.00	1.00	1.00	1.00	1.00	1.00	1.00	1.00	1.00	1.00	1.00								
PHF Volume:	25	290	33	63	322	4	2	14	14	81	25	113								
Reduct Vol:	0	0	0	0	0	0	0	0	0	0	0	0								
FinalVolume:	25	290	33	63	322	4	2	14	14	81	25	113								
Critical Gap Module:																				
Critical Gp:	4.1	xxxx	xxxxx	4.1	xxxx	xxxxx	7.5	6.5	6.9	7.5	6.5	6.9								
FollowUpTim:	2.2	xxxx	xxxxx	2.2	xxxx	xxxxx	3.5	4.0	3.3	3.5	4.0	3.3								
Capacity Module:																				
Cnflict Vol:	326	xxxx	xxxxx	323	xxxx	xxxxx	658	823	163	651	809	162								
Potent Cap.:	1245	xxxx	xxxxx	1248	xxxx	xxxxx	354	311	859	358	317	861								
Move Cap.:	1245	xxxx	xxxxx	1248	xxxx	xxxxx	272	289	859	321	295	861								
Volume/Cap:	0.02	xxxx	xxxx	0.05	xxxx	xxxx	0.01	0.05	0.02	0.25	0.08	0.13								
Level Of Service Module:																				
2Way95thQ:	0.1	xxxx	xxxxx	0.2	xxxx	xxxxx	xxxx	xxxx	xxxxx	xxxx	xxxx	xxxxx								
Control Del:	8.0	xxxx	xxxxx	8.0	xxxx	xxxxx	xxxxx	xxxx	xxxxx	xxxxx	xxxx	xxxxx								
LOS by Move:	A	*	*	A	*	*	*	*	*	*	*	*								
Movement:	LT	-	LTR	-	RT	LT	-	LTR	-	RT	LT	-	LTR	-	RT					
Shared Cap.:	xxxx	xxxx	xxxxx	xxxx	xxxx	xxxxx	xxxx	416	xxxxx	xxxx	468	xxxxx								
SharedQueue:	xxxxx	xxxx	xxxxx	xxxxx	xxxx	xxxxx	xxxxx	0.2	xxxxx	xxxxx	2.4	xxxxx								
Shrd ConDel:	xxxxx	xxxx	xxxxx	xxxxx	xxxx	xxxxx	xxxxx	14.3	xxxxx	xxxxx	19.3	xxxxx								
Shared LOS:	*	*	*	*	*	*	*	B	*	*	C	*								
ApproachDel:	xxxxxx			xxxxxx			14.3			19.3									
ApproachLOS:	*			*			B			C										

Note: Queue reported is the number of cars per lane.

Newport Banning Ranch
Year 2016 Cumulative Conditions with Project
PM Peak Hour

Level Of Service Computation Report
ICU 1(Loss as Cycle Length %) Method (Future Volume Alternative)

Intersection #56 Bluff Rd/15th St

Cycle (sec):	100	Critical Vol./Cap.(X):	0.291
Loss Time (sec):	0 (Y+R=4.0 sec)	Average Delay (sec/veh):	xxxxxx
Optimal Cycle:	26	Level Of Service:	A

Street Name:	Bluff Road									15th Street								
Approach:	North Bound						South Bound						East Bound						West Bound					
Movement:	L	-	T	-	R		L	-	T	-	R		L	-	T	-	R		L	-	T	-	R	
Control:	Split Phase						Split Phase						Permitted						Permitted					
Rights:	Include						Include						Include						Include					
Min. Green:	0	0	0				0	0	0				0	0	0				0	0	0			
Lanes:	0	0	0	0	0		1	0	0	0	2		2	0	2	0	0		0	0	2	1	0	
Volume Module:																								
Base Vol:	0	0	0				0	0	0				0	0	0				0	0	0			
Growth Adj:	1.00	1.00	1.00				1.00	1.00	1.00				1.00	1.00	1.00				1.00	1.00	1.00			
Initial Bse:	0	0	0				0	0	0				0	0	0				0	0	0			
Added Vol:	0	0	0				28	0	385				337	126	0				0	262	50			
Internal Ca:	0	0	0				0	0	1				1	0	0				0	0	0			
Initial Fut:	0	0	0				28	0	386				338	126	0				0	262	50			
User Adj:	1.00	1.00	1.00				1.00	1.00	1.00				1.00	1.00	1.00				1.00	1.00	1.00			
PHF Adj:	1.00	1.00	1.00				1.00	1.00	1.00				1.00	1.00	1.00				1.00	1.00	1.00			
PHF Volume:	0	0	0				28	0	386				338	126	0				0	262	50			
Reduct Vol:	0	0	0				0	0	0				0	0	0				0	0	0			
Reduced Vol:	0	0	0				28	0	386				338	126	0				0	262	50			
PCE Adj:	1.00	1.00	1.00				1.00	1.00	1.00				1.00	1.00	1.00				1.00	1.00	1.00			
MLF Adj:	1.00	1.00	1.00				1.00	1.00	1.00				1.00	1.00	1.00				1.00	1.00	1.00			
FinalVolume:	0	0	0				28	0	386				338	126	0				0	262	50			
Saturation Flow Module:																								
Sat/Lane:	1600	1600	1600				1600	1600	1600				1600	1600	1600				1600	1600	1600			
Adjustment:	1.00	1.00	1.00				1.00	1.00	1.00				1.00	1.00	1.00				1.00	1.00	1.00			
Lanes:	0.00	0.00	0.00				1.00	0.00	2.00				2.00	2.00	0.00				0.00	2.52	0.48			
Final Sat.:	0	0	0				1600	0	3200				3200	3200	0				0	4031	769			
Capacity Analysis Module:																								
Vol/Sat:	0.00	0.00	0.00				0.02	0.00	0.12				0.11	0.04	0.00				0.00	0.07	0.06			
Crit Moves:									****				****							****				

Newport Banning Ranch
Year 2016 Cumulative Conditions with Project
PM Peak Hour

Level Of Service Computation Report
ICU 1(Loss as Cycle Length %) Method (Future Volume Alternative)

Intersection #57 Bluff Rd/W. Coast Hwy

Cycle (sec):	120	Critical Vol./Cap.(X):	0.844
Loss Time (sec):	0 (Y+R=4.0 sec)	Average Delay (sec/veh):	xxxxxx
Optimal Cycle:	146	Level Of Service:	D

Street Name:	Bluff Road						W. Coast Highway					
Approach:	North Bound			South Bound			East Bound			West Bound		
Movement:	L - T - R			L - T - R			L - T - R			L - T - R		
Control:	Split Phase			Split Phase			Protected			Protected		
Rights:	Include			Include			Include			Include		
Min. Green:	0	0	0	0	0	0	0	0	0	0	0	0
Lanes:	0 0 0 0 0			2 0 0 0 2			2 0 3 0 0			0 0 3 0 1		
Volume Module:												
Base Vol:	0	0	0	0	0	0	0	1487	0	0	2818	0
Growth Adj:	1.00	1.00	1.00	1.00	1.00	1.00	1.00	1.07	1.00	1.00	1.07	1.00
Initial Bse:	0	0	0	0	0	0	0	1594	0	0	3021	0
Added Vol:	0	0	0	125	0	483	332	60	0	0	-191	202
PasserByVol:	0	0	0	0	0	0	0	0	0	0	0	0
Initial Fut:	0	0	0	125	0	483	332	1654	0	0	2830	202
User Adj:	1.00	1.00	1.00	1.00	1.00	1.00	1.00	1.00	1.00	1.00	1.00	1.00
PHF Adj:	1.00	1.00	1.00	1.00	1.00	1.00	1.00	1.00	1.00	1.00	1.00	1.00
PHF Volume:	0	0	0	125	0	483	332	1654	0	0	2830	202
Reduct Vol:	0	0	0	0	0	0	0	0	0	0	0	0
Reduced Vol:	0	0	0	125	0	483	332	1654	0	0	2830	202
PCE Adj:	1.00	1.00	1.00	1.00	1.00	1.00	1.00	1.00	1.00	1.00	1.00	1.00
MLF Adj:	1.00	1.00	1.00	1.00	1.00	1.00	1.00	1.00	1.00	1.00	1.00	1.00
FinalVolume:	0	0	0	125	0	483	332	1654	0	0	2830	202
Saturation Flow Module:												
Sat/Lane:	1600	1600	1600	1600	1600	1600	1600	1600	1600	1600	1600	1600
Adjustment:	1.00	1.00	1.00	1.00	1.00	1.00	1.00	1.00	1.00	1.00	1.00	1.00
Lanes:	0.00	0.00	0.00	2.00	0.00	2.00	2.00	3.00	0.00	0.00	3.00	1.00
Final Sat.:	0	0	0	3200	0	3200	3200	4800	0	0	4800	1600
Capacity Analysis Module:												
Vol/Sat:	0.00	0.00	0.00	0.04	0.00	0.15	0.10	0.34	0.00	0.00	0.59	0.13
Crit Moves:						****	****				****	

Newport Banning Ranch
Year 2016 Cumulative Conditions with Project
PM Peak Hour

Level Of Service Computation Report
2000 HCM 4-Way Stop Method (Future Volume Alternative)

Intersection #58 Monrovia Ave/15th Street

Cycle (sec):	100	Critical Vol./Cap.(X):	0.421
Loss Time (sec):	0 (Y+R=4.0 sec)	Average Delay (sec/veh):	9.8
Optimal Cycle:	0	Level Of Service:	A

Street Name:	Monrovia Ave						15th Street					
Approach:	North Bound			South Bound			East Bound			West Bound		
Movement:	L - T - R			L - T - R			L - T - R			L - T - R		
Control:	Stop Sign			Stop Sign			Stop Sign			Stop Sign		
Rights:	Include			Include			Include			Include		
Min. Green:	0	0	0	0	0	0	0	0	0	0	0	0
Lanes:	0 0 0 1 0			0 0 1! 0 0			0 1 0 0 0			0 0 1! 0 0		
Volume Module: >> Count Date: 4 May 2011 << Existing PM Peak Hour												
Base Vol:	0	5	17	92	5	1	9	7	0	11	2	42
Growth Adj:	1.00	1.00	1.00	1.00	1.00	1.00	1.00	1.00	1.00	1.00	1.00	1.00
Initial Bse:	0	5	17	92	5	1	9	7	0	11	2	42
Added Vol:	0	0	0	-3	0	63	24	130	0	0	249	29
PasserByVol:	0	0	0	0	0	0	0	0	0	0	0	0
Initial Fut:	0	5	17	89	5	64	33	137	0	11	251	71
User Adj:	1.00	1.00	1.00	1.00	1.00	1.00	1.00	1.00	1.00	1.00	1.00	1.00
PHF Adj:	1.00	1.00	1.00	1.00	1.00	1.00	1.00	1.00	1.00	1.00	1.00	1.00
PHF Volume:	0	5	17	89	5	64	33	137	0	11	251	71
Reduct Vol:	0	0	0	0	0	0	0	0	0	0	0	0
Reduced Vol:	0	5	17	89	5	64	33	137	0	11	251	71
PCE Adj:	1.00	1.00	1.00	1.00	1.00	1.00	1.00	1.00	1.00	1.00	1.00	1.00
MLF Adj:	1.00	1.00	1.00	1.00	1.00	1.00	1.00	1.00	1.00	1.00	1.00	1.00
FinalVolume:	0	5	17	89	5	64	33	137	0	11	251	71
Saturation Flow Module:												
Adjustment:	1.00	1.00	1.00	1.00	1.00	1.00	1.00	1.00	1.00	1.00	1.00	1.00
Lanes:	0.00	0.23	0.77	0.56	0.03	0.41	0.19	0.81	0.00	0.03	0.76	0.21
Final Sat.:	0	153	519	384	22	276	142	588	0	26	597	169
Capacity Analysis Module:												
Vol/Sat:	xxxx	0.03	0.03	0.23	0.23	0.23	0.23	0.23	xxxx	0.42	0.42	0.42
Crit Moves:			****		****			****			****	
Delay/Veh:	0.0	7.9	7.9	9.2	9.2	9.2	9.1	9.1	0.0	10.4	10.4	10.4
Delay Adj:	1.00	1.00	1.00	1.00	1.00	1.00	1.00	1.00	1.00	1.00	1.00	1.00
AdjDel/Veh:	0.0	7.9	7.9	9.2	9.2	9.2	9.1	9.1	0.0	10.4	10.4	10.4
LOS by Move:	*	A	A	A	A	A	A	A	*	B	B	B
ApproachDel:		7.9			9.2			9.1			10.4	
Delay Adj:		1.00			1.00			1.00			1.00	
ApprAdjDel:		7.9			9.2			9.1			10.4	
LOS by Appr:		A			A			A			B	
AllWayAvgQ:	0.0	0.0	0.0	0.3	0.3	0.3	0.3	0.3	0.3	0.7	0.7	0.7

Newport Banning Ranch
Year 2016 Cumulative Conditions with Project
PM Peak Hour

Note: Queue reported is the number of cars per lane.

Newport Banning Ranch
Year 2016 Cumulative Conditions with Project
PM Peak Hour

Level Of Service Computation Report
ICU 1(Loss as Cycle Length %) Method (Future Volume Alternative)

Intersection #100 Pomona Ave/16th St

Cycle (sec):	100	Critical Vol./Cap.(X):	0.051
Loss Time (sec):	0 (Y+R=4.0 sec)	Average Delay (sec/veh):	xxxxxx
Optimal Cycle:	15	Level Of Service:	A

Street Name:	Pomona Avenue						16th Street					
Approach:	North Bound			South Bound			East Bound			West Bound		
Movement:	L - T - R			L - T - R			L - T - R			L - T - R		
Control:	Permitted			Permitted			Permitted			Permitted		
Rights:	Include			Include			Include			Include		
Min. Green:	0	0	0	0	0	0	0	0	0	0	0	0
Lanes:	0 0 0 0 0			1 0 0 1 0			1 0 0 1 0			0 0 0 1 0		
Volume Module:												
Base Vol:	0	0	0	34	56	15	0	-200	0	0	-200	0
Growth Adj:	1.07	1.07	1.07	1.07	1.07	1.07	1.07	1.07	1.07	1.07	1.07	1.07
Initial Bse:	0	0	0	36	60	16	0	-214	0	0	-214	0
Added Vol:	0	0	0	0	0	4	2	87	0	0	162	0
PasserByVol:	0	0	0	0	0	0	0	0	0	0	0	0
Initial Fut:	0	0	0	36	60	20	2	-127	0	0	-52	0
User Adj:	1.00	1.00	1.00	1.00	1.00	1.00	1.00	0.00	1.00	1.00	0.00	1.00
PHF Adj:	1.00	1.00	1.00	1.00	1.00	1.00	1.00	0.00	1.00	1.00	0.00	1.00
PHF Volume:	0	0	0	36	60	20	2	0	0	0	0	0
Reduct Vol:	0	0	0	0	0	0	0	0	0	0	0	0
Reduced Vol:	0	0	0	36	60	20	2	0	0	0	0	0
PCE Adj:	1.00	1.00	1.00	1.00	1.00	1.00	1.00	0.00	1.00	1.00	0.00	1.00
MLF Adj:	1.00	1.00	1.00	1.00	1.00	1.00	1.00	0.00	1.00	1.00	0.00	1.00
FinalVolume:	0	0	0	36	60	20	2	0	0	0	0	0
Saturation Flow Module:												
Sat/Lane:	1600	1600	1600	1600	1600	1600	1600	1600	1600	1600	1600	1600
Adjustment:	1.00	1.00	1.00	1.00	1.00	1.00	1.00	1.00	1.00	1.00	1.00	1.00
Lanes:	0.00	0.00	0.00	1.00	0.75	0.25	1.00	1.00	0.00	0.00	1.00	0.00
Final Sat.:	0	0	0	1600	1199	401	1600	1600	0	0	1600	0
Capacity Analysis Module:												
Vol/Sat:	0.00	0.00	0.00	0.02	0.05	0.05	0.00	0.00	0.00	0.00	0.00	0.00
Crit Moves:					****		****					

Newport Banning Ranch
Year 2016 Cumulative Conditions with Project Bluff Road Alternative
AM Peak Hour

Scenario Report

Scenario:	CEQA 2016 w/ Proj Alt AM ICU
Command:	CEQA 2016 w/ Proj Alt AM ICU
Volume:	Existing+Commited AM
Geometry:	2016 Bluff to 17th ICU
Impact Fee:	Default Impact Fee
Trip Generation:	Cumulative + Proj AM
Trip Distribution:	Cumul+Project
Paths:	Bluff to 17th
Routes:	Default Route
Configuration:	2016 ICU

Newport Banning Ranch
Year 2016 Cumulative Conditions with Project Bluff Road Alternative
AM Peak Hour

Level Of Service Computation Report
2000 HCM 4-Way Stop Method (Future Volume Alternative)

Intersection #1 Monrovia Ave/16th St

Cycle (sec): 100 Critical Vol./Cap.(X): 0.490
Loss Time (sec): 0 (Y+R=4.0 sec) Average Delay (sec/veh): 12.1
Optimal Cycle: 0 Level Of Service: B

Street Name:	Monrovia Avenue						16th Street					
Approach:	North Bound			South Bound			East Bound			West Bound		
Movement:	L -	T -	R	L -	T -	R	L -	T -	R	L -	T -	R
Control:	Stop Sign			Stop Sign			Stop Sign			Stop Sign		
Rights:	Include			Include			Include			Include		
Min. Green:	0	0	0	0	0	0	0	0	0	0	0	0
Lanes:	0 0	1! 0	0	0 0	1! 0	0	0 0	1! 0	0	0 0	1! 0	0
Volume Module:												
Base Vol:	4	92	54	35	104	19	9	20	10	112	44	44
Growth Adj:	1.00	1.00	1.00	1.00	1.00	1.00	1.00	1.00	1.00	1.00	1.00	1.00
Initial Bse:	4	92	54	35	104	19	9	20	10	112	44	44
Added Vol:	0	37	27	-4	20	15	42	193	0	65	56	-17
Committed P:	0	0	0	0	0	0	0	0	0	0	0	0
Initial Fut:	4	129	81	31	124	34	51	213	10	177	100	27
User Adj:	1.00	1.00	1.00	1.00	1.00	1.00	1.00	1.00	1.00	1.00	1.00	1.00
PHF Adj:	1.00	1.00	1.00	1.00	1.00	1.00	1.00	1.00	1.00	1.00	1.00	1.00
PHF Volume:	4	129	81	31	124	34	51	213	10	177	100	27
Reduct Vol:	0	0	0	0	0	0	0	0	0	0	0	0
Reduced Vol:	4	129	81	31	124	34	51	213	10	177	100	27
PCE Adj:	1.00	1.00	1.00	1.00	1.00	1.00	1.00	1.00	1.00	1.00	1.00	1.00
MLF Adj:	1.00	1.00	1.00	1.00	1.00	1.00	1.00	1.00	1.00	1.00	1.00	1.00
FinalVolume:	4	129	81	31	124	34	51	213	10	177	100	27
Saturation Flow Module:												
Adjustment:	1.00	1.00	1.00	1.00	1.00	1.00	1.00	1.00	1.00	1.00	1.00	1.00
Lanes:	0.02	0.60	0.38	0.16	0.66	0.18	0.18	0.78	0.04	0.58	0.33	0.09
Final Sat.:	11	358	225	94	375	103	115	479	22	361	204	55
Capacity Analysis Module:												
Vol/Sat:	0.36	0.36	0.36	0.33	0.33	0.33	0.44	0.44	0.44	0.49	0.49	0.49
Crit Moves:	****				****				****		****	
Delay/Veh:	11.2	11.2	11.2	11.1	11.1	11.1	12.4	12.4	12.4	13.2	13.2	13.2
Delay Adj:	1.00	1.00	1.00	1.00	1.00	1.00	1.00	1.00	1.00	1.00	1.00	1.00
AdjDel/Veh:	11.2	11.2	11.2	11.1	11.1	11.1	12.4	12.4	12.4	13.2	13.2	13.2
LOS by Move:	B	B	B	B	B	B	B	B	B	B	B	B
ApproachDel:	11.2			11.1			12.4			13.2		
Delay Adj:	1.00			1.00			1.00			1.00		
ApprAdjDel:	11.2			11.1			12.4			13.2		
LOS by Appr:	B			B			B			B		
AllWayAvgQ:	0.4	0.4	0.4	0.4	0.4	0.4	0.7	0.7	0.7	0.8	0.8	0.8

Newport Banning Ranch
Year 2016 Cumulative Conditions with Project Bluff Road Alternative
AM Peak Hour

Note: Queue reported is the number of cars per lane.
****

Newport Banning Ranch
Year 2016 Cumulative Conditions with Project Bluff Road Alternative
AM Peak Hour

Level Of Service Computation Report
ICU 1(Loss as Cycle Length %) Method (Future Volume Alternative)

Intersection #2 Placentia Ave/15th St

Cycle (sec):	100	Critical Vol./Cap.(X):	0.635
Loss Time (sec):	0 (Y+R=4.0 sec)	Average Delay (sec/veh):	xxxxxx
Optimal Cycle:	62	Level Of Service:	B

Street Name:	Placentia Ave						15th Street					
Approach:	North Bound			South Bound			East Bound			West Bound		
Movement:	L - T - R			L - T - R			L - T - R			L - T - R		
Control:	Prot+Permit			Prot+Permit			Split Phase			Split Phase		
Rights:	Include			Include			Include			Include		
Min. Green:	0	0	0	0	0	0	0	0	0	0	0	0
Lanes:	1 0 1	1 0		1 0 1	1 0		0 0 1!	0 0		0 1 0	0 1	
Volume Module:												
Base Vol:	131	425	15	25	431	19	57	51	174	4	22	75
Growth Adj:	1.00	1.00	1.00	1.00	1.00	1.00	1.00	1.00	1.00	1.00	1.00	1.00
Initial Bse:	131	425	15	25	431	19	57	51	174	4	22	75
Added Vol:	66	-166	0	0	-33	16	25	0	218	0	25	0
Committed P:	0	24	0	0	5	0	0	0	0	0	0	0
Initial Fut:	197	283	15	25	403	35	82	51	392	4	47	75
User Adj:	1.00	1.00	1.00	1.00	1.00	1.00	1.00	1.00	1.00	1.00	1.00	1.00
PHF Adj:	1.00	1.00	1.00	1.00	1.00	1.00	1.00	1.00	1.00	1.00	1.00	1.00
PHF Volume:	197	283	15	25	403	35	82	51	392	4	47	75
Reduct Vol:	0	0	0	0	0	0	0	0	0	0	0	0
Reduced Vol:	197	283	15	25	403	35	82	51	392	4	47	75
PCE Adj:	1.00	1.00	1.00	1.00	1.00	1.00	1.00	1.00	1.00	1.00	1.00	1.00
MLF Adj:	1.00	1.00	1.00	1.00	1.00	1.00	1.00	1.00	1.00	1.00	1.00	1.00
FinalVolume:	197	283	15	25	403	35	82	51	392	4	47	75
Saturation Flow Module:												
Sat/Lane:	1600	1600	1600	1600	1600	1600	1600	1600	1600	1600	1600	1600
Adjustment:	1.00	1.00	1.00	1.00	1.00	1.00	1.00	1.00	1.00	1.00	1.00	1.00
Lanes:	1.00	1.90	0.10	1.00	1.84	0.16	0.15	0.10	0.75	0.08	0.92	1.00
Final Sat.:	1600	3039	161	1600	2944	256	250	155	1195	125	1475	1600
Capacity Analysis Module:												
Vol/Sat:	0.12	0.09	0.09	0.02	0.14	0.14	0.33	0.33	0.33	0.03	0.03	0.05
Crit Moves:	****				****			****				****

Newport Banning Ranch
Year 2016 Cumulative Conditions with Project Bluff Road Alternative
AM Peak Hour

Level Of Service Computation Report
2000 HCM Unsignalized Method (Future Volume Alternative)

Intersection #3 Superior Ave/15th St

Average Delay (sec/veh): 1.7 Worst Case Level Of Service: C[22.5]

Street Name:	Superior Avenue						15th Street					
Approach:	North Bound			South Bound			East Bound			West Bound		
Movement:	L - T - R			L - T - R			L - T - R			L - T - R		
Control:	Uncontrolled			Uncontrolled			Stop Sign			Stop Sign		
Rights:	Include			Include			Include			Include		
Lanes:	1 0 2 0 0			0 0 1 1 0			1 0 0 0 1			0 0 0 0 0		
Volume Module:												
Base Vol:	77	799	0	0	328	59	64	0	21	0	0	0
Growth Adj:	1.00	1.00	1.00	1.00	1.00	1.00	1.00	1.00	1.00	1.00	1.00	1.00
Initial Bse:	77	799	0	0	328	59	64	0	21	0	0	0
Added Vol:	0	68	0	0	4	25	0	0	0	0	0	0
Committed P:	0	30	0	0	27	0	0	0	0	0	0	0
Initial Fut:	77	897	0	0	359	84	64	0	21	0	0	0
User Adj:	1.00	1.00	1.00	1.00	1.00	1.00	1.00	1.00	1.00	1.00	1.00	1.00
PHF Adj:	1.00	1.00	1.00	1.00	1.00	1.00	1.00	1.00	1.00	1.00	1.00	1.00
PHF Volume:	77	897	0	0	359	84	64	0	21	0	0	0
Reduct Vol:	0	0	0	0	0	0	0	0	0	0	0	0
FinalVolume:	77	897	0	0	359	84	64	0	21	0	0	0
Critical Gap Module:												
Critical Gp:	4.1	xxxx	xxxxx	xxxxx	xxxx	xxxxx	6.8	xxxx	6.9	xxxxx	xxxx	xxxxx
FollowUpTim:	2.2	xxxx	xxxxx	xxxxx	xxxx	xxxxx	3.5	xxxx	3.3	xxxxx	xxxx	xxxxx
Capacity Module:												
Cnflict Vol:	443	xxxx	xxxxx	xxxx	xxxx	xxxxx	1004	xxxx	222	xxxx	xxxx	xxxxx
Potent Cap.:	1128	xxxx	xxxxx	xxxx	xxxx	xxxxx	242	xxxx	788	xxxx	xxxx	xxxxx
Move Cap.:	1128	xxxx	xxxxx	xxxx	xxxx	xxxxx	229	xxxx	788	xxxx	xxxx	xxxxx
Volume/Cap:	0.07	xxxx	xxxx	xxxx	xxxx	xxxx	0.28	xxxx	0.03	xxxx	xxxx	xxxx
Level Of Service Module:												
2Way95thQ:	0.2	xxxx	xxxxx	xxxx	xxxx	xxxxx	1.1	xxxx	0.1	xxxx	xxxx	xxxxx
Control Del:	8.4	xxxx	xxxxx	xxxxx	xxxx	xxxxx	26.7	xxxx	9.7	xxxxx	xxxx	xxxxx
LOS by Move:	A	*	*	*	*	*	D	*	A	*	*	*
Movement:	LT - LTR - RT			LT - LTR - RT			LT - LTR - RT			LT - LTR - RT		
Shared Cap.:	xxxx	xxxx	xxxxx	xxxx	xxxx	xxxxx	xxxx	xxxx	xxxxx	xxxx	xxxx	xxxxx
SharedQueue:	xxxxx	xxxx	xxxxx	xxxxx	xxxx	xxxxx	xxxxx	xxxx	xxxxx	xxxxx	xxxx	xxxxx
Shrd ConDel:	xxxxx	xxxx	xxxxx	xxxxx	xxxx	xxxxx	xxxxx	xxxx	xxxxx	xxxxx	xxxx	xxxxx
Shared LOS:	*	*	*	*	*	*	*	*	*	*	*	*
ApproachDel:	xxxxxx			xxxxxx			22.5			xxxxxx		
ApproachLOS:	*			*			C			*		

Note: Queue reported is the number of cars per lane.

Newport Banning Ranch
Year 2016 Cumulative Conditions with Project Bluff Road Alternative
AM Peak Hour

Level Of Service Computation Report
ICU 1(Loss as Cycle Length %) Method (Future Volume Alternative)

Intersection #4 Superior Ave/Placentia Ave

Cycle (sec):	100	Critical Vol./Cap.(X):	0.513
Loss Time (sec):	0 (Y+R=4.0 sec)	Average Delay (sec/veh):	xxxxxx
Optimal Cycle:	38	Level Of Service:	A

Street Name:	Superior Avenue						Placentia Avenue					
Approach:	North Bound			South Bound			East Bound			West Bound		
Movement:	L - T - R			L - T - R			L - T - R			L - T - R		
Control:	Protected			Protected			Permitted			Permitted		
Rights:	Include			Include			Include			Include		
Min. Green:	0	0	0	0	0	0	0	0	0	0	0	0
Lanes:	1 0 1	1 0		1 0 1	1 0		1 0 1	0 1		0 1 0	1 0	
Volume Module:												
Base Vol:	346	803	33	57	243	9	18	325	268	8	227	61
Growth Adj:	1.00	1.00	1.00	1.00	1.00	1.00	1.00	1.00	1.00	1.00	1.00	1.00
Initial Bse:	346	803	33	57	243	9	18	325	268	8	227	61
Added Vol:	-149	-140	0	0	-46	50	208	0	-23	0	0	0
Committed P:	0	30	0	12	15	0	0	5	0	4	24	0
Initial Fut:	197	693	33	69	212	59	226	330	245	12	251	61
User Adj:	1.00	1.00	1.00	1.00	1.00	1.00	1.00	1.00	1.00	1.00	1.00	1.00
PHF Adj:	1.00	1.00	1.00	1.00	1.00	1.00	1.00	1.00	1.00	1.00	1.00	1.00
PHF Volume:	197	693	33	69	212	59	226	330	245	12	251	61
Reduct Vol:	0	0	0	0	0	0	0	0	0	0	0	0
Reduced Vol:	197	693	33	69	212	59	226	330	245	12	251	61
PCE Adj:	1.00	1.00	1.00	1.00	1.00	1.00	1.00	1.00	1.00	1.00	1.00	1.00
MLF Adj:	1.00	1.00	1.00	1.00	1.00	1.00	1.00	1.00	1.00	1.00	1.00	1.00
FinalVolume:	197	693	33	69	212	59	226	330	245	12	251	61
Saturation Flow Module:												
Sat/Lane:	1600	1600	1600	1600	1600	1600	1600	1600	1600	1600	1600	1600
Adjustment:	1.00	1.00	1.00	1.00	1.00	1.00	1.00	1.00	1.00	1.00	1.00	1.00
Lanes:	1.00	1.91	0.09	1.00	1.56	0.44	1.00	1.00	1.00	0.07	1.55	0.38
Final Sat.:	1600	3055	145	1600	2503	697	1600	1600	1600	119	2479	602
Capacity Analysis Module:												
Vol/Sat:	0.12	0.23	0.23	0.04	0.08	0.08	0.14	0.21	0.15	0.01	0.10	0.10
Crit Moves:		****		****			****				****	

Newport Banning Ranch
Year 2016 Cumulative Conditions with Project Bluff Road Alternative
AM Peak Hour

Level Of Service Computation Report
ICU 1(Loss as Cycle Length %) Method (Future Volume Alternative)

Intersection #5 Hospital Rd/Newport Blvd

Cycle (sec):	120	Critical Vol./Cap.(X):	0.539
Loss Time (sec):	0 (Y+R=4.0 sec)	Average Delay (sec/veh):	xxxxxx
Optimal Cycle:	49	Level Of Service:	A

Street Name:	Newport Boulevard						Hospital Road					
Approach:	North Bound			South Bound			East Bound			West Bound		
Movement:	L - T - R			L - T - R			L - T - R			L - T - R		
Control:	Protected			Protected			Protected			Protected		
Rights:	Include			Include			Include			Include		
Min. Green:	0	0	0	0	0	0	0	0	0	0	0	0
Lanes:	1 0 3 0 1			1 0 3 0 1			2 0 1 0 1			1 0 1 1 0		
Volume Module:												
Base Vol:	129	1373	96	56	1066	368	197	124	199	65	224	28
Growth Adj:	1.07	1.07	1.07	1.07	1.07	1.07	1.00	1.00	1.00	1.00	1.00	1.00
Initial Bse:	138	1472	103	60	1143	394	197	124	199	65	224	28
Added Vol:	6	6	2	8	13	0	0	1	2	10	0	3
Committed P:	23	49	0	0	64	10	12	0	9	0	1	0
Initial Fut:	167	1527	105	68	1220	404	209	125	210	75	225	31
User Adj:	1.00	1.00	1.00	1.00	1.00	1.00	1.00	1.00	1.00	1.00	1.00	1.00
PHF Adj:	1.00	1.00	1.00	1.00	1.00	1.00	1.00	1.00	1.00	1.00	1.00	1.00
PHF Volume:	167	1527	105	68	1220	404	209	125	210	75	225	31
Reduct Vol:	0	0	0	0	0	0	0	0	0	0	0	0
Reduced Vol:	167	1527	105	68	1220	404	209	125	210	75	225	31
PCE Adj:	1.00	1.00	1.00	1.00	1.00	1.00	1.00	1.00	1.00	1.00	1.00	1.00
MLF Adj:	1.00	1.00	1.00	1.00	1.00	1.00	1.00	1.00	1.00	1.00	1.00	1.00
FinalVolume:	167	1527	105	68	1220	404	209	125	210	75	225	31
Saturation Flow Module:												
Sat/Lane:	1600	1600	1600	1600	1600	1600	1600	1600	1600	1600	1600	1600
Adjustment:	1.00	1.00	1.00	1.00	1.00	1.00	1.00	1.00	1.00	1.00	1.00	1.00
Lanes:	1.00	3.00	1.00	1.00	3.00	1.00	2.00	1.00	1.00	1.00	1.76	0.24
Final Sat.:	1600	4800	1600	1600	4800	1600	3200	1600	1600	1600	2813	388
Capacity Analysis Module:												
Vol/Sat:	0.10	0.32	0.07	0.04	0.25	0.25	0.07	0.08	0.13	0.05	0.08	0.08
Crit Moves:		****		****					****	****		

Newport Banning Ranch
Year 2016 Cumulative Conditions with Project Bluff Road Alternative
AM Peak Hour

Level Of Service Computation Report
ICU 1(Loss as Cycle Length %) Method (Future Volume Alternative)

Intersection #6 Orange St/W. Coast Hwy

Cycle (sec):	120	Critical Vol./Cap.(X):	0.826
Loss Time (sec):	0 (Y+R=4.0 sec)	Average Delay (sec/veh):	xxxxxx
Optimal Cycle:	107	Level Of Service:	D

Street Name:	Orange Street						W. Coast Highway					
Approach:	North Bound			South Bound			East Bound			West Bound		
Movement:	L - T - R			L - T - R			L - T - R			L - T - R		
Control:	Permitted			Permitted			Protected			Protected		
Rights:	Include			Include			Include			Include		
Min. Green:	0	0	0	0	0	0	0	0	0	0	0	0
Lanes:	0 1	0 0	1	0 1	0 0	1	1 0	2 1	0	1 0	3 0	1
Volume Module:												
Base Vol:	49	1	70	40	2	19	11	3095	10	43	870	17
Growth Adj:	1.00	1.00	1.00	1.00	1.00	1.00	1.07	1.07	1.07	1.07	1.07	1.07
Initial Bse:	49	1	70	40	2	19	12	3318	11	46	933	18
Added Vol:	0	0	0	0	0	4	4	161	0	0	299	0
Committed P:	0	0	0	0	0	0	0	62	0	0	37	0
Initial Fut:	49	1	70	40	2	23	16	3541	11	46	1269	18
User Adj:	1.00	1.00	1.00	1.00	1.00	1.00	1.00	1.00	1.00	1.00	1.00	1.00
PHF Adj:	1.00	1.00	1.00	1.00	1.00	1.00	1.00	1.00	1.00	1.00	1.00	1.00
PHF Volume:	49	1	70	40	2	23	16	3541	11	46	1269	18
Reduct Vol:	0	0	0	0	0	0	0	0	0	0	0	0
Reduced Vol:	49	1	70	40	2	23	16	3541	11	46	1269	18
PCE Adj:	1.00	1.00	1.00	1.00	1.00	1.00	1.00	1.00	1.00	1.00	1.00	1.00
MLF Adj:	1.00	1.00	1.00	1.00	1.00	1.00	1.00	1.00	1.00	1.00	1.00	1.00
FinalVolume:	49	1	70	40	2	23	16	3541	11	46	1269	18
Saturation Flow Module:												
Sat/Lane:	1600	1600	1600	1600	1600	1600	1600	1600	1600	1600	1600	1600
Adjustment:	1.00	1.00	1.00	1.00	1.00	1.00	1.00	1.00	1.00	1.00	1.00	1.00
Lanes:	0.98	0.02	1.00	0.95	0.05	1.00	1.00	2.99	0.01	1.00	3.00	1.00
Final Sat.:	1568	32	1600	1524	76	1600	1600	4786	14	1600	4800	1600
Capacity Analysis Module:												
Vol/Sat:	0.03	0.03	0.04	0.03	0.03	0.01	0.01	0.74	0.74	0.03	0.26	0.01
Crit Moves:	****				****			****		****		

Newport Banning Ranch
Year 2016 Cumulative Conditions with Project Bluff Road Alternative
AM Peak Hour

Level Of Service Computation Report
ICU 1(Loss as Cycle Length %) Method (Future Volume Alternative)

Intersection #7 Prospect St/W. Coast Hwy

Cycle (sec):	120	Critical Vol./Cap.(X):	0.814
Loss Time (sec):	0 (Y+R=4.0 sec)	Average Delay (sec/veh):	xxxxxx
Optimal Cycle:	100	Level Of Service:	D

Street Name:	Prospect Street						W. Coast Highway					
Approach:	North Bound			South Bound			East Bound			West Bound		
Movement:	L - T - R			L - T - R			L - T - R			L - T - R		
Control:	Permitted			Permitted			Protected			Protected		
Rights:	Include			Include			Include			Include		
Min. Green:	0	0	0	0	0	0	0	0	0	0	0	0
Lanes:	0 1 0	0 1		0 0 1!	0 0		1 0 2	1 0		1 0 2	1 0	
Volume Module:												
Base Vol:	19	0	33	267	0	7	17	2490	5	26	1112	34
Growth Adj:	1.00	1.00	1.00	1.00	1.00	1.00	1.07	1.07	1.07	1.07	1.07	1.07
Initial Bse:	19	0	33	267	0	7	18	2669	5	28	1192	36
Added Vol:	0	0	0	9	0	2	2	159	0	0	297	3
Committed P:	0	0	0	0	0	0	0	62	0	0	37	0
Initial Fut:	19	0	33	276	0	9	20	2890	5	28	1526	39
User Adj:	1.00	1.00	1.00	1.00	1.00	1.00	1.00	1.00	1.00	1.00	1.00	1.00
PHF Adj:	1.00	1.00	1.00	1.00	1.00	1.00	1.00	1.00	1.00	1.00	1.00	1.00
PHF Volume:	19	0	33	276	0	9	20	2890	5	28	1526	39
Reduct Vol:	0	0	0	0	0	0	0	0	0	0	0	0
Reduced Vol:	19	0	33	276	0	9	20	2890	5	28	1526	39
PCE Adj:	1.00	1.00	1.00	1.00	1.00	1.00	1.00	1.00	1.00	1.00	1.00	1.00
MLF Adj:	1.00	1.00	1.00	1.00	1.00	1.00	1.00	1.00	1.00	1.00	1.00	1.00
FinalVolume:	19	0	33	276	0	9	20	2890	5	28	1526	39
Saturation Flow Module:												
Sat/Lane:	1600	1600	1600	1600	1600	1600	1600	1600	1600	1600	1600	1600
Adjustment:	1.00	1.00	1.00	1.00	1.00	1.00	1.00	1.00	1.00	1.00	1.00	1.00
Lanes:	1.00	0.00	1.00	0.97	0.00	0.03	1.00	2.99	0.01	1.00	2.92	0.08
Final Sat.:	1600	0	1600	1549	0	51	1600	4791	9	1600	4679	121
Capacity Analysis Module:												
Vol/Sat:	0.01	0.00	0.02	0.17	0.00	0.18	0.01	0.60	0.60	0.02	0.33	0.33
Crit Moves:			****	****				****		****		

Newport Banning Ranch
Year 2016 Cumulative Conditions with Project Bluff Road Alternative
AM Peak Hour

Level Of Service Computation Report
ICU 1(Loss as Cycle Length %) Method (Future Volume Alternative)

Intersection #8 W. Coast Hwy/Superior Ave

Cycle (sec):	120	Critical Vol./Cap.(X):	0.729
Loss Time (sec):	0 (Y+R=4.0 sec)	Average Delay (sec/veh):	xxxxxx
Optimal Cycle:	84	Level Of Service:	C

Street Name:	Superior Avenue						W. Coast Highway					
Approach:	North Bound			South Bound			East Bound			West Bound		
Movement:	L - T - R			L - T - R			L - T - R			L - T - R		
Control:	Split Phase			Split Phase			Protected			Protected		
Rights:	Include			Ovl			Include			Include		
Min. Green:	0	0	0	0	0	0	0	0	0	0	0	0
Lanes:	1 1 0	1 0		1 1 1	0 2		2 0	3 0	1	1 0	3 1	0
Volume Module:												
Base Vol:	168	266	114	170	165	247	709	1914	211	95	768	155
Growth Adj:	1.00	1.00	1.00	1.00	1.00	1.00	1.07	1.07	1.07	1.07	1.07	1.07
Initial Bse:	168	266	114	170	165	247	760	2052	226	102	823	166
Added Vol:	23	0	0	24	0	-97	-308	152	49	0	147	13
Committed P:	1	6	0	0	3	12	24	49	0	0	42	0
Initial Fut:	192	272	114	194	168	162	476	2253	275	102	1012	179
User Adj:	1.00	1.00	1.00	1.00	1.00	1.00	1.00	1.00	1.00	1.00	1.00	1.00
PHF Adj:	1.00	1.00	1.00	1.00	1.00	1.00	1.00	1.00	1.00	1.00	1.00	1.00
PHF Volume:	192	272	114	194	168	162	476	2253	275	102	1012	179
Reduct Vol:	0	0	0	0	0	0	0	0	0	0	0	0
Reduced Vol:	192	272	114	194	168	162	476	2253	275	102	1012	179
PCE Adj:	1.00	1.00	1.00	1.00	1.00	1.00	1.00	1.00	1.00	1.00	1.00	1.00
MLF Adj:	1.00	1.00	1.00	1.00	1.00	1.00	1.00	1.00	1.00	1.00	1.00	1.00
FinalVolume:	192	272	114	194	168	162	476	2253	275	102	1012	179
OvlAdjVol:						0						
Saturation Flow Module:												
Sat/Lane:	1600	1600	1600	1600	1600	1600	1600	1600	1600	1600	1600	1600
Adjustment:	1.00	1.00	1.00	1.00	1.00	1.00	1.00	1.00	1.00	1.00	1.00	1.00
Lanes:	1.00	1.41	0.59	1.61	1.39	2.00	2.00	3.00	1.00	1.00	3.40	0.60
Final Sat.:	1600	2254	946	2572	2228	3200	3200	4800	1600	1600	5438	962
Capacity Analysis Module:												
Vol/Sat:	0.12	0.12	0.12	0.08	0.08	0.05	0.15	0.47	0.17	0.06	0.19	0.19
OvlAdjV/S:						0.00						
Crit Moves:	****			****				****		****		

Newport Banning Ranch
Year 2016 Cumulative Conditions with Project Bluff Road Alternative
AM Peak Hour

Level Of Service Computation Report
ICU 1(Loss as Cycle Length %) Method (Future Volume Alternative)

Intersection #9 Newport Blvd/W. Coast Hwy

Cycle (sec):	120	Critical Vol./Cap.(X):	0.959
Loss Time (sec):	0 (Y+R=4.0 sec)	Average Delay (sec/veh):	xxxxxx
Optimal Cycle:	180	Level Of Service:	E

Street Name:	Newport Boulevard									W. Coast Highway								
Approach:	North Bound						South Bound						East Bound						West Bound					
Movement:	L	-	T	-	R		L	-	T	-	R		L	-	T	-	R		L	-	T	-	R	
Control:	Protected						Protected						Protected						Protected					
Rights:	Include						Include						Ignore						Ignore					
Min. Green:	0	0	0				0	0	0				0	0	0				0	0	0			
Lanes:	0	0	0	0	0		2	0	0	0	1		0	0	2	0	1		0	0	3	0	1	
Volume Module:																								
Base Vol:	0	0	0				383	0	288				0	2082	188				0	812	349			
Growth Adj:	1.00	1.00	1.00				1.00	1.00	1.00				1.00	1.07	1.07				1.00	1.07	1.07			
Initial Bse:	0	0	0				383	0	288				0	2232	202				0	870	374			
Added Vol:	0	0	0				18	0	2				0	175	0				0	159	6			
Committed P:	0	0	0				17	0	35				0	12	4				0	42	0			
Initial Fut:	0	0	0				418	0	325				0	2419	206				0	1071	380			
User Adj:	1.00	1.00	1.00				1.00	1.00	1.00				1.00	1.00	0.00				1.00	1.00	0.00			
PHF Adj:	1.00	1.00	1.00				1.00	1.00	1.00				1.00	1.00	0.00				1.00	1.00	0.00			
PHF Volume:	0	0	0				418	0	325				0	2419	0				0	1071	0			
Reduct Vol:	0	0	0				0	0	0				0	0	0				0	0	0			
Reduced Vol:	0	0	0				418	0	325				0	2419	0				0	1071	0			
PCE Adj:	1.00	1.00	1.00				1.00	1.00	1.00				1.00	1.00	0.00				1.00	1.00	0.00			
MLF Adj:	1.00	1.00	1.00				1.00	1.00	1.00				1.00	1.00	0.00				1.00	1.00	0.00			
FinalVolume:	0	0	0				418	0	325				0	2419	0				0	1071	0			
Saturation Flow Module:																								
Sat/Lane:	1600	1600	1600				1600	1600	1600				1600	1600	1600				1600	1600	1600			
Adjustment:	1.00	1.00	1.00				1.00	1.00	1.00				1.00	1.00	1.00				1.00	1.00	1.00			
Lanes:	0.00	0.00	0.00				2.00	0.00	1.00				0.00	2.00	1.00				0.00	3.00	1.00			
Final Sat.:	0	0	0				3200	0	1600				0	3200	1600				0	4800	1600			
Capacity Analysis Module:																								
Vol/Sat:	0.00	0.00	0.00				0.13	0.00	0.20				0.00	0.76	0.00				0.00	0.22	0.00			
Crit Moves:									****					****					****					

Newport Banning Ranch
Year 2016 Cumulative Conditions with Project Bluff Road Alternative
AM Peak Hour

Level Of Service Computation Report
ICU 1(Loss as Cycle Length %) Method (Future Volume Alternative)

Intersection #10 Riverside Ave/W. Coast Hwy

Cycle (sec):	120	Critical Vol./Cap.(X):	0.785
Loss Time (sec):	0 (Y+R=4.0 sec)	Average Delay (sec/veh):	xxxxxx
Optimal Cycle:	86	Level Of Service:	C

Street Name:	Riverside Avenue						W. Coast Highway					
Approach:	North Bound			South Bound			East Bound			West Bound		
Movement:	L - T - R			L - T - R			L - T - R			L - T - R		
Control:	Permitted			Permitted			Protected			Protected		
Rights:	Include			Ovl			Include			Include		
Min. Green:	0	0	0	0	0	0	0	0	0	0	0	0
Lanes:	0 0 0 0 1			0 1 0 0 1			1 0 1 1 0			1 0 3 0 1		
Volume Module:												
Base Vol:	0	0	1	77	4	304	312	1893	4	17	1124	67
Growth Adj:	1.00	1.00	1.00	1.00	1.00	1.00	1.07	1.07	1.07	1.07	1.07	1.07
Initial Bse:	0	0	1	77	4	304	334	2029	4	18	1205	72
Added Vol:	0	0	0	0	0	11	18	180	0	0	166	0
Committed P:	0	0	0	2	0	0	0	103	0	0	92	1
Initial Fut:	0	0	1	79	4	315	352	2312	4	18	1463	73
User Adj:	1.00	1.00	1.00	1.00	1.00	1.00	1.00	1.00	1.00	1.00	1.00	1.00
PHF Adj:	1.00	1.00	1.00	1.00	1.00	1.00	1.00	1.00	1.00	1.00	1.00	1.00
PHF Volume:	0	0	1	79	4	315	352	2312	4	18	1463	73
Reduct Vol:	0	0	0	0	0	0	0	0	0	0	0	0
Reduced Vol:	0	0	1	79	4	315	352	2312	4	18	1463	73
PCE Adj:	1.00	1.00	1.00	1.00	1.00	1.00	1.00	1.00	1.00	1.00	1.00	1.00
MLF Adj:	1.00	1.00	1.00	1.00	1.00	1.00	1.00	1.00	1.00	1.00	1.00	1.00
FinalVolume:	0	0	1	79	4	315	352	2312	4	18	1463	73
OvlAdjVol:						0						
Saturation Flow Module:												
Sat/Lane:	1600	1600	1600	1600	1600	1600	1600	1600	1600	1600	1600	1600
Adjustment:	1.00	1.00	1.00	1.00	1.00	1.00	1.00	1.00	1.00	1.00	1.00	1.00
Lanes:	0.00	0.00	1.00	0.95	0.05	1.00	1.00	1.99	0.01	1.00	3.00	1.00
Final Sat.:	0	0	1600	1523	77	1600	1600	3194	6	1600	4800	1600
Capacity Analysis Module:												
Vol/Sat:	0.00	0.00	0.00	0.05	0.05	0.20	0.22	0.72	0.72	0.01	0.30	0.05
OvlAdjV/S:						0.00						
Crit Moves:	****			****				****		****		

Newport Banning Ranch
Year 2016 Cumulative Conditions with Project Bluff Road Alternative
AM Peak Hour

Level Of Service Computation Report
ICU 1(Loss as Cycle Length %) Method (Future Volume Alternative)

Intersection #11 Tustin Ave/W. Coast Hwy

Cycle (sec):	120	Critical Vol./Cap.(X):	0.787
Loss Time (sec):	0 (Y+R=4.0 sec)	Average Delay (sec/veh):	xxxxxx
Optimal Cycle:	180	Level Of Service:	C

Street Name:	Tustin Avenue						W. Coast Highway					
Approach:	North Bound			South Bound			East Bound			West Bound		
Movement:	L - T - R			L - T - R			L - T - R			L - T - R		
Control:	Permitted			Permitted			Protected			Permitted		
Rights:	Include			Include			Include			Include		
Min. Green:	0	0	0	0	0	0	0	0	0	0	0	0
Lanes:	0 0	1! 0	0	0 0	1! 0	0	1 0	1 1	0	0 0	3 0	1
Volume Module:												
Base Vol:	0	0	0	33	1	14	42	1992	1	0	1220	35
Growth Adj:	1.00	1.00	1.00	1.00	1.00	1.00	1.07	1.07	1.07	1.07	1.07	1.07
Initial Bse:	0	0	0	33	1	14	45	2135	1	0	1308	38
Added Vol:	0	0	0	0	0	8	17	163	0	0	158	0
Committed P:	0	0	0	0	0	0	0	108	0	0	93	0
Initial Fut:	0	0	0	33	1	22	62	2406	1	0	1559	38
User Adj:	1.00	1.00	1.00	1.00	1.00	1.00	1.00	1.00	1.00	1.00	1.00	1.00
PHF Adj:	1.00	1.00	1.00	1.00	1.00	1.00	1.00	1.00	1.00	1.00	1.00	1.00
PHF Volume:	0	0	0	33	1	22	62	2406	1	0	1559	38
Reduct Vol:	0	0	0	0	0	0	0	0	0	0	0	0
Reduced Vol:	0	0	0	33	1	22	62	2406	1	0	1559	38
PCE Adj:	1.00	1.00	1.00	1.00	1.00	1.00	1.00	1.00	1.00	1.00	1.00	1.00
MLF Adj:	1.00	1.00	1.00	1.00	1.00	1.00	1.00	1.00	1.00	1.00	1.00	1.00
FinalVolume:	0	0	0	33	1	22	62	2406	1	0	1559	38
Saturation Flow Module:												
Sat/Lane:	1600	1600	1600	1600	1600	1600	1600	1600	1600	1600	1600	1600
Adjustment:	1.00	1.00	1.00	1.00	1.00	1.00	1.00	1.00	1.00	1.00	1.00	1.00
Lanes:	0.00	1.00	0.00	0.59	0.02	0.39	1.00	1.99	0.01	0.00	3.00	1.00
Final Sat.:	0	1600	0	943	29	629	1600	3199	1	0	4800	1600
Capacity Analysis Module:												
Vol/Sat:	0.00	0.00	0.00	0.02	0.03	0.03	0.04	0.75	0.75	0.00	0.32	0.02
Crit Moves:					****			****				

Newport Banning Ranch
Year 2016 Cumulative Conditions with Project Bluff Road Alternative
AM Peak Hour

Level Of Service Computation Report
ICU 1(Loss as Cycle Length %) Method (Future Volume Alternative)

Intersection #12 Dover Dr/W. Coast Hwy

Cycle (sec):	120	Critical Vol./Cap.(X):	0.727
Loss Time (sec):	0 (Y+R=4.0 sec)	Average Delay (sec/veh):	xxxxxx
Optimal Cycle:	83	Level Of Service:	C

Street Name:	Dover Drive						W. Coast Highway					
Approach:	North Bound			South Bound			East Bound			West Bound		
Movement:	L - T - R			L - T - R			L - T - R			L - T - R		
Control:	Split Phase			Split Phase			Protected			Protected		
Rights:	Include			Include			Include			Ignore		
Min. Green:	0	0	0	0	0	0	0	0	0	0	0	0
Lanes:	1 0 1	1 0		3 0 1	0 1		2 0 2	1 0		1 0 3	0 1	
Volume Module:												
Base Vol:	16	61	29	840	51	108	117	1912	25	42	1212	469
Growth Adj:	1.00	1.00	1.00	1.00	1.00	1.00	1.07	1.07	1.07	1.07	1.07	1.07
Initial Bse:	16	61	29	840	51	108	125	2050	27	45	1299	503
Added Vol:	3	0	0	44	0	7	9	152	3	0	148	102
Committed P:	0	0	0	9	0	18	10	93	0	0	91	7
Initial Fut:	19	61	29	893	51	133	144	2295	30	45	1538	612
User Adj:	1.00	1.00	1.00	1.00	1.00	1.00	1.00	1.00	1.00	1.00	1.00	0.00
PHF Adj:	1.00	1.00	1.00	1.00	1.00	1.00	1.00	1.00	1.00	1.00	1.00	0.00
PHF Volume:	19	61	29	893	51	133	144	2295	30	45	1538	0
Reduct Vol:	0	0	0	0	0	0	0	0	0	0	0	0
Reduced Vol:	19	61	29	893	51	133	144	2295	30	45	1538	0
PCE Adj:	1.00	1.00	1.00	1.00	1.00	1.00	1.00	1.00	1.00	1.00	1.00	0.00
MLF Adj:	1.00	1.00	1.00	1.00	1.00	1.00	1.00	1.00	1.00	1.00	1.00	0.00
FinalVolume:	19	61	29	893	51	133	144	2295	30	45	1538	0
Saturation Flow Module:												
Sat/Lane:	1600	1600	1600	1600	1600	1600	1600	1600	1600	1600	1600	1600
Adjustment:	1.00	1.00	1.00	1.00	1.00	1.00	1.00	1.00	1.00	1.00	1.00	1.00
Lanes:	1.00	1.36	0.64	3.00	1.00	1.00	2.00	2.96	0.04	1.00	3.00	1.00
Final Sat.:	1600	2169	1031	4800	1600	1600	3200	4738	62	1600	4800	1600
Capacity Analysis Module:												
Vol/Sat:	0.01	0.03	0.03	0.19	0.03	0.08	0.05	0.48	0.48	0.03	0.32	0.00
Crit Moves:			****	****				****		****		

Newport Banning Ranch
Year 2016 Cumulative Conditions with Project Bluff Road Alternative
AM Peak Hour

Level Of Service Computation Report
ICU 1(Loss as Cycle Length %) Method (Future Volume Alternative)

Intersection #13 Magnolia St/Hamilton Ave

Cycle (sec):	100	Critical Vol./Cap.(X):	0.667
Loss Time (sec):	5 (Y+R=4.0 sec)	Average Delay (sec/veh):	xxxxxx
Optimal Cycle:	34	Level Of Service:	B

Street Name:	Magnolia Street						Hamilton Avenue					
Approach:	North Bound			South Bound			East Bound			West Bound		
Movement:	L - T - R			L - T - R			L - T - R			L - T - R		
Control:	Prot+Permit			Prot+Permit			Permitted			Permitted		
Rights:	Include			Include			Include			Include		
Min. Green:	0	0	0	0	0	0	0	0	0	0	0	0
Lanes:	1 0 1	1 0		1 0 2	0 1		1 0 0	1 0		1 0 1	0 1	
Volume Module:												
Base Vol:	56	241	42	197	303	35	67	273	145	66	172	368
Growth Adj:	1.07	1.07	1.07	1.07	1.07	1.07	1.07	1.07	1.07	1.07	1.07	1.07
Initial Bse:	60	258	45	211	325	38	72	293	155	71	184	394
Added Vol:	55	93	34	5	35	9	30	53	29	12	36	9
Committed P:	2	3	0	0	6	0	0	0	3	0	0	0
Initial Fut:	117	354	79	216	366	47	102	346	187	83	220	403
User Adj:	1.00	1.00	1.00	1.00	1.00	1.00	1.00	1.00	1.00	1.00	1.00	1.00
PHF Adj:	1.00	1.00	1.00	1.00	1.00	1.00	1.00	1.00	1.00	1.00	1.00	1.00
PHF Volume:	117	354	79	216	366	47	102	346	187	83	220	403
Reduct Vol:	0	0	0	0	0	0	0	0	0	0	0	0
Reduced Vol:	117	354	79	216	366	47	102	346	187	83	220	403
PCE Adj:	1.00	1.00	1.00	1.00	1.00	1.00	1.00	1.00	1.00	1.00	1.00	1.00
MLF Adj:	1.00	1.00	1.00	1.00	1.00	1.00	1.00	1.00	1.00	1.00	1.00	1.00
FinalVolume:	117	354	79	216	366	47	102	346	187	83	220	403
Saturation Flow Module:												
Sat/Lane:	1600	1600	1600	1600	1600	1600	1600	1600	1600	1600	1600	1600
Adjustment:	1.06	1.06	1.06	1.06	1.06	1.06	1.06	1.06	1.06	1.06	1.06	1.06
Lanes:	1.00	1.64	0.36	1.00	2.00	1.00	1.00	0.65	0.35	1.00	1.00	1.00
Final Sat.:	1700	2780	620	1700	3400	1700	1700	1102	598	1700	1700	1700
Capacity Analysis Module:												
Vol/Sat:	0.07	0.13	0.13	0.13	0.11	0.03	0.06	0.31	0.31	0.05	0.13	0.24
Crit Moves:		****		****				****		****		

Newport Banning Ranch
Year 2016 Cumulative Conditions with Project Bluff Road Alternative
AM Peak Hour

Level Of Service Computation Report
ICU 1(Loss as Cycle Length %) Method (Future Volume Alternative)

Intersection #14 Bushard St/Hamilton Ave

Cycle (sec):	100	Critical Vol./Cap.(X):	0.476
Loss Time (sec):	5 (Y+R=4.0 sec)	Average Delay (sec/veh):	xxxxxx
Optimal Cycle:	23	Level Of Service:	A

Street Name:	Bushard Street						Hamilton Avenue					
Approach:	North Bound			South Bound			East Bound			West Bound		
Movement:	L - T - R			L - T - R			L - T - R			L - T - R		
Control:	Permitted			Permitted			Permitted			Permitted		
Rights:	Include			Include			Include			Include		
Min. Green:	0	0	0	0	0	0	0	0	0	0	0	0
Lanes:	1 0	1 1	0	1 0	1 1	0	1 0	1 1	0	1 0	1 1	0
Volume Module:												
Base Vol:	66	176	51	188	297	145	59	526	33	52	409	94
Growth Adj:	1.07	1.07	1.07	1.07	1.07	1.07	1.07	1.07	1.07	1.07	1.07	1.07
Initial Bse:	71	189	55	202	318	155	63	564	35	56	438	101
Added Vol:	0	0	0	0	0	0	0	92	0	0	58	0
Committed P:	0	0	0	0	0	0	0	0	0	0	0	0
Initial Fut:	71	189	55	202	318	155	63	656	35	56	496	101
User Adj:	1.00	1.00	1.00	1.00	1.00	1.00	1.00	1.00	1.00	1.00	1.00	1.00
PHF Adj:	1.00	1.00	1.00	1.00	1.00	1.00	1.00	1.00	1.00	1.00	1.00	1.00
PHF Volume:	71	189	55	202	318	155	63	656	35	56	496	101
Reduct Vol:	0	0	0	0	0	0	0	0	0	0	0	0
Reduced Vol:	71	189	55	202	318	155	63	656	35	56	496	101
PCE Adj:	1.00	1.00	1.00	1.00	1.00	1.00	1.00	1.00	1.00	1.00	1.00	1.00
MLF Adj:	1.00	1.00	1.00	1.00	1.00	1.00	1.00	1.00	1.00	1.00	1.00	1.00
FinalVolume:	71	189	55	202	318	155	63	656	35	56	496	101
Saturation Flow Module:												
Sat/Lane:	1600	1600	1600	1600	1600	1600	1600	1600	1600	1600	1600	1600
Adjustment:	1.06	1.06	1.06	1.06	1.06	1.06	1.06	1.06	1.06	1.06	1.06	1.06
Lanes:	1.00	1.55	0.45	1.00	1.34	0.66	1.00	1.90	0.10	1.00	1.66	0.34
Final Sat.:	1700	2636	764	1700	2285	1115	1700	3226	174	1700	2826	574
Capacity Analysis Module:												
Vol/Sat:	0.04	0.07	0.07	0.12	0.14	0.14	0.04	0.20	0.20	0.03	0.18	0.18
Crit Moves:		****		****				****		****		

Newport Banning Ranch
Year 2016 Cumulative Conditions with Project Bluff Road Alternative
AM Peak Hour

Level Of Service Computation Report
ICU 1(Loss as Cycle Length %) Method (Future Volume Alternative)

Intersection #15 Brookhurst St/Hamilton Ave (Victoria St)

Cycle (sec):	100	Critical Vol./Cap.(X):	0.729
Loss Time (sec):	5 (Y+R=4.0 sec)	Average Delay (sec/veh):	xxxxxx
Optimal Cycle:	40	Level Of Service:	C

Street Name:	Brookhurst						Hamilton Avenue (Victoria Street)					
Approach:	North Bound			South Bound			East Bound			West Bound		
Movement:	L - T - R			L - T - R			L - T - R			L - T - R		
Control:	Protected			Protected			Prot+Permit			Prot+Permit		
Rights:	Include			Include			Include			Include		
Min. Green:	0	0	0	0	0	0	0	0	0	0	0	0
Lanes:	1 0 3	0 1		2 0 2	1 0		1 0 1	1 0		1 0 2	0 1	
Volume Module:												
Base Vol:	59	289	321	501	483	110	95	683	47	124	348	277
Growth Adj:	1.07	1.07	1.07	1.07	1.07	1.07	1.07	1.07	1.07	1.07	1.07	1.07
Initial Bse:	63	310	344	537	518	118	102	732	50	133	373	297
Added Vol:	20	41	0	4	17	21	64	18	10	1	16	11
Committed P:	0	1	0	0	3	0	0	0	0	0	0	0
Initial Fut:	83	352	344	541	538	139	166	750	60	134	389	308
User Adj:	1.00	1.00	1.00	1.00	1.00	1.00	1.00	1.00	1.00	1.00	1.00	1.00
PHF Adj:	1.00	1.00	1.00	1.00	1.00	1.00	1.00	1.00	1.00	1.00	1.00	1.00
PHF Volume:	83	352	344	541	538	139	166	750	60	134	389	308
Reduct Vol:	0	0	0	0	0	0	0	0	0	0	0	0
Reduced Vol:	83	352	344	541	538	139	166	750	60	134	389	308
PCE Adj:	1.00	1.00	1.00	1.00	1.00	1.00	1.00	1.00	1.00	1.00	1.00	1.00
MLF Adj:	1.00	1.00	1.00	1.00	1.00	1.00	1.00	1.00	1.00	1.00	1.00	1.00
FinalVolume:	83	352	344	541	538	139	166	750	60	134	389	308
Saturation Flow Module:												
Sat/Lane:	1600	1600	1600	1600	1600	1600	1600	1600	1600	1600	1600	1600
Adjustment:	1.06	1.06	1.06	1.06	1.06	1.06	1.06	1.06	1.06	1.06	1.06	1.06
Lanes:	1.00	3.00	1.00	2.00	2.38	0.62	1.00	1.85	0.15	1.00	2.00	1.00
Final Sat.:	1700	5100	1700	3400	4053	1047	1700	3147	253	1700	3400	1700
Capacity Analysis Module:												
Vol/Sat:	0.05	0.07	0.20	0.16	0.13	0.13	0.10	0.24	0.24	0.08	0.11	0.18
Crit Moves:			****	****				****		****		

Newport Banning Ranch
Year 2016 Cumulative Conditions with Project Bluff Road Alternative
AM Peak Hour

Level Of Service Computation Report
ICU 1(Loss as Cycle Length %) Method (Future Volume Alternative)

Intersection #16 Magnolia St/Banning Ave

Cycle (sec):	100	Critical Vol./Cap.(X):	0.273
Loss Time (sec):	5 (Y+R=4.0 sec)	Average Delay (sec/veh):	xxxxxx
Optimal Cycle:	17	Level Of Service:	A

Street Name:	Magnolia Street						Banning Avenue					
Approach:	North Bound			South Bound			East Bound			West Bound		
Movement:	L - T - R			L - T - R			L - T - R			L - T - R		
Control:	Protected			Protected			Split Phase			Split Phase		
Rights:	Include			Include			Include			Include		
Min. Green:	0	0	0	0	0	0	0	0	0	0	0	0
Lanes:	0 0 1	1 0		1 0 2	0 0		0 0 0	0 0		2 0 0	0 1	
Volume Module:												
Base Vol:	0	197	37	82	376	0	0	0	0	62	0	112
Growth Adj:	1.07	1.07	1.07	1.07	1.07	1.07	1.07	1.07	1.07	1.07	1.07	1.07
Initial Bse:	0	211	40	88	403	0	0	0	0	66	0	120
Added Vol:	0	77	1	2	66	0	0	0	0	0	0	1
Committed P:	0	7	0	0	12	0	0	0	0	0	0	0
Initial Fut:	0	295	41	90	481	0	0	0	0	66	0	121
User Adj:	1.00	1.00	1.00	1.00	1.00	1.00	1.00	1.00	1.00	1.00	1.00	1.00
PHF Adj:	1.00	1.00	1.00	1.00	1.00	1.00	1.00	1.00	1.00	1.00	1.00	1.00
PHF Volume:	0	295	41	90	481	0	0	0	0	66	0	121
Reduct Vol:	0	0	0	0	0	0	0	0	0	0	0	0
Reduced Vol:	0	295	41	90	481	0	0	0	0	66	0	121
PCE Adj:	1.00	1.00	1.00	1.00	1.00	1.00	1.00	1.00	1.00	1.00	1.00	1.00
MLF Adj:	1.00	1.00	1.00	1.00	1.00	1.00	1.00	1.00	1.00	1.00	1.00	1.00
FinalVolume:	0	295	41	90	481	0	0	0	0	66	0	121
Saturation Flow Module:												
Sat/Lane:	1600	1600	1600	1600	1600	1600	1600	1600	1600	1600	1600	1600
Adjustment:	1.06	1.06	1.06	1.06	1.06	1.06	1.06	1.06	1.06	1.06	1.06	1.06
Lanes:	0.00	1.76	0.24	1.00	2.00	0.00	0.00	0.00	0.00	2.00	0.00	1.00
Final Sat.:	0	2988	412	1700	3400	0	0	0	0	3400	0	1700
Capacity Analysis Module:												
Vol/Sat:	0.00	0.10	0.10	0.05	0.14	0.00	0.00	0.00	0.00	0.02	0.00	0.07
Crit Moves:		****		****								****

Newport Banning Ranch
Year 2016 Cumulative Conditions with Project Bluff Road Alternative
AM Peak Hour

Level Of Service Computation Report
2000 HCM 4-Way Stop Method (Future Volume Alternative)

Intersection #17 Bushard St/Banning Ave

Cycle (sec): 100 Critical Vol./Cap.(X): 0.305
Loss Time (sec): 5 (Y+R=4.0 sec) Average Delay (sec/veh): 10.3
Optimal Cycle: 0 Level Of Service: B

Street Name:	Bushard Street						Banning Avenue					
Approach:	North Bound			South Bound			East Bound			West Bound		
Movement:	L - T - R			L - T - R			L - T - R			L - T - R		
Control:	Stop Sign			Stop Sign			Stop Sign			Stop Sign		
Rights:	Include			Include			Include			Include		
Min. Green:	0	0	0	0	0	0	0	0	0	0	0	0
Lanes:	1 0 1	1 0		1 0 1	1 0		1 0 0	1 0		1 0 0	1 0	
Volume Module:												
Base Vol:	14	86	15	16	220	121	53	84	28	7	114	19
Growth Adj:	1.07	1.07	1.07	1.07	1.07	1.07	1.07	1.07	1.07	1.07	1.07	1.07
Initial Bse:	15	92	16	17	236	130	57	90	30	8	122	20
Added Vol:	1	0	0	0	0	0	0	1	1	0	2	0
Committed P:	0	0	0	0	3	0	0	0	0	0	0	0
Initial Fut:	16	92	16	17	239	130	57	91	31	8	124	20
User Adj:	1.00	1.00	1.00	1.00	1.00	1.00	1.00	1.00	1.00	1.00	1.00	1.00
PHF Adj:	1.00	1.00	1.00	1.00	1.00	1.00	1.00	1.00	1.00	1.00	1.00	1.00
PHF Volume:	16	92	16	17	239	130	57	91	31	8	124	20
Reduct Vol:	0	0	0	0	0	0	0	0	0	0	0	0
Reduced Vol:	16	92	16	17	239	130	57	91	31	8	124	20
PCE Adj:	1.00	1.00	1.00	1.00	1.00	1.00	1.00	1.00	1.00	1.00	1.00	1.00
MLF Adj:	1.00	1.00	1.00	1.00	1.00	1.00	1.00	1.00	1.00	1.00	1.00	1.00
FinalVolume:	16	92	16	17	239	130	57	91	31	8	124	20
Saturation Flow Module:												
Adjustment:	1.00	1.00	1.00	1.00	1.00	1.00	1.00	1.00	1.00	1.00	1.00	1.00
Lanes:	1.00	1.70	0.30	1.00	1.30	0.70	1.00	0.75	0.25	1.00	0.86	0.14
Final Sat.:	493	915	163	544	782	453	523	434	148	518	490	80
Capacity Analysis Module:												
Vol/Sat:	0.03	0.10	0.10	0.03	0.31	0.29	0.11	0.21	0.21	0.01	0.25	0.25
Crit Moves:		****			****			****				****
Delay/Veh:	9.8	9.6	9.5	9.3	10.8	10.1	10.0	10.0	10.0	9.4	10.5	10.5
Delay Adj:	1.00	1.00	1.00	1.00	1.00	1.00	1.00	1.00	1.00	1.00	1.00	1.00
AdjDel/Veh:	9.8	9.6	9.5	9.3	10.8	10.1	10.0	10.0	10.0	9.4	10.5	10.5
LOS by Move:	A	A	A	A	B	B	A	A	A	A	B	B
ApproachDel:		9.6			10.5			10.0			10.5	
Delay Adj:		1.00			1.00			1.00			1.00	
ApprAdjDel:		9.6			10.5			10.0			10.5	
LOS by Appr:		A			B			A			B	
AllWayAvgQ:	0.0	0.1	0.1	0.0	0.4	0.4	0.1	0.2	0.2	0.0	0.3	0.3

Newport Banning Ranch
Year 2016 Cumulative Conditions with Project Bluff Road Alternative
AM Peak Hour

Note: Queue reported is the number of cars per lane.
****

Newport Banning Ranch
Year 2016 Cumulative Conditions with Project Bluff Road Alternative
AM Peak Hour

Level Of Service Computation Report
ICU 1(Loss as Cycle Length %) Method (Future Volume Alternative)

Intersection #18 Brookhurst St/Banning Ave

Cycle (sec):	100	Critical Vol./Cap.(X):	0.275
Loss Time (sec):	5 (Y+R=4.0 sec)	Average Delay (sec/veh):	xxxxxx
Optimal Cycle:	17	Level Of Service:	A

Street Name:	Brookhurst Street						Banning Avenue					
Approach:	North Bound			South Bound			East Bound			West Bound		
Movement:	L - T - R			L - T - R			L - T - R			L - T - R		
Control:	Protected			Protected			Split Phase			Split Phase		
Rights:	Include			Include			Include			Include		
Min. Green:	0	0	0	0	0	0	0	0	0	0	0	0
Lanes:	1 0 3 0 0			0 0 2 1 0			1 0 0 0 1			0 0 0 0 0		
Volume Module:												
Base Vol:	7	477	0	0	535	102	126	0	14	0	0	0
Growth Adj:	1.07	1.07	1.07	1.07	1.07	1.07	1.07	1.07	1.07	1.07	1.07	1.07
Initial Bse:	8	511	0	0	574	109	135	0	15	0	0	0
Added Vol:	0	60	0	0	26	2	1	0	0	0	0	0
Committed P:	0	3	0	0	6	0	0	0	0	0	0	0
Initial Fut:	8	574	0	0	606	111	136	0	15	0	0	0
User Adj:	1.00	1.00	1.00	1.00	1.00	1.00	1.00	1.00	1.00	1.00	1.00	1.00
PHF Adj:	1.00	1.00	1.00	1.00	1.00	1.00	1.00	1.00	1.00	1.00	1.00	1.00
PHF Volume:	8	574	0	0	606	111	136	0	15	0	0	0
Reduct Vol:	0	0	0	0	0	0	0	0	0	0	0	0
Reduced Vol:	8	574	0	0	606	111	136	0	15	0	0	0
PCE Adj:	1.00	1.00	1.00	1.00	1.00	1.00	1.00	1.00	1.00	1.00	1.00	1.00
MLF Adj:	1.00	1.00	1.00	1.00	1.00	1.00	1.00	1.00	1.00	1.00	1.00	1.00
FinalVolume:	8	574	0	0	606	111	136	0	15	0	0	0
Saturation Flow Module:												
Sat/Lane:	1600	1600	1600	1600	1600	1600	1600	1600	1600	1600	1600	1600
Adjustment:	1.06	1.06	1.06	1.06	1.06	1.06	1.06	1.06	1.06	1.06	1.06	1.06
Lanes:	1.00	3.00	0.00	0.00	2.53	0.47	1.00	0.00	1.00	0.00	0.00	0.00
Final Sat.:	1700	5100	0	0	4308	792	1700	0	1700	0	0	0
Capacity Analysis Module:												
Vol/Sat:	0.00	0.11	0.00	0.00	0.14	0.14	0.08	0.00	0.01	0.00	0.00	0.00
Crit Moves:	****				****		****					

Newport Banning Ranch
Year 2016 Cumulative Conditions with Project Bluff Road Alternative
AM Peak Hour

Level Of Service Computation Report
ICU 1(Loss as Cycle Length %) Method (Future Volume Alternative)

Intersection #19 Magnolia St/PCH

Cycle (sec):	120	Critical Vol./Cap.(X):	0.546
Loss Time (sec):	6 (Y+R=4.0 sec)	Average Delay (sec/veh):	xxxxxx
Optimal Cycle:	29	Level Of Service:	A

Street Name:	Magnolia Street						Pacific Coast Highway					
Approach:	North Bound			South Bound			East Bound			West Bound		
Movement:	L - T - R			L - T - R			L - T - R			L - T - R		
Control:	Split Phase			Split Phase			Protected			Protected		
Rights:	Include			Include			Include			Include		
Min. Green:	0	0	0	0	0	0	0	0	0	0	0	0
Lanes:	1 0 0 1 0			1 1 0 0 1			1 0 3 0 1			1 0 3 0 1		
Volume Module:												
Base Vol:	3	24	7	232	41	137	116	1607	17	18	614	50
Growth Adj:	1.07	1.07	1.07	1.07	1.07	1.07	1.07	1.07	1.07	1.07	1.07	1.07
Initial Bse:	3	26	8	249	44	147	124	1723	18	19	658	54
Added Vol:	0	0	0	42	0	25	16	95	0	0	182	62
Committed P:	0	0	0	12	0	0	0	35	0	0	21	7
Initial Fut:	3	26	8	303	44	172	140	1853	18	19	861	123
User Adj:	1.00	1.00	1.00	1.00	1.00	1.00	1.00	1.00	1.00	1.00	1.00	1.00
PHF Adj:	1.00	1.00	1.00	1.00	1.00	1.00	1.00	1.00	1.00	1.00	1.00	1.00
PHF Volume:	3	26	8	303	44	172	140	1853	18	19	861	123
Reduct Vol:	0	0	0	0	0	0	0	0	0	0	0	0
Reduced Vol:	3	26	8	303	44	172	140	1853	18	19	861	123
PCE Adj:	1.00	1.00	1.00	1.00	1.00	1.00	1.00	1.00	1.00	1.00	1.00	1.00
MLF Adj:	1.00	1.00	1.00	1.00	1.00	1.00	1.00	1.00	1.00	1.00	1.00	1.00
FinalVolume:	3	26	8	303	44	172	140	1853	18	19	861	123
Saturation Flow Module:												
Sat/Lane:	1600	1600	1600	1600	1600	1600	1600	1600	1600	1600	1600	1600
Adjustment:	1.06	1.06	1.06	1.06	1.06	1.06	1.06	1.06	1.06	1.06	1.06	1.06
Lanes:	1.00	0.77	0.23	1.75	0.25	1.00	1.00	3.00	1.00	1.00	3.00	1.00
Final Sat.:	1700	1316	384	2969	431	1700	1700	5100	1700	1700	5100	1700
Capacity Analysis Module:												
Vol/Sat:	0.00	0.02	0.02	0.10	0.10	0.10	0.08	0.36	0.01	0.01	0.17	0.07
Crit Moves:		****		****				****		****		

Newport Banning Ranch
Year 2016 Cumulative Conditions with Project Bluff Road Alternative
AM Peak Hour

Level Of Service Computation Report
ICU 1(Loss as Cycle Length %) Method (Future Volume Alternative)

Intersection #20 Brookhurst St/Bushard St

Cycle (sec):	100	Critical Vol./Cap.(X):	0.352
Loss Time (sec):	5 (Y+R=4.0 sec)	Average Delay (sec/veh):	xxxxxx
Optimal Cycle:	19	Level Of Service:	A

Street Name:	Brookhurst Street									Bushard Street								
Approach:	North Bound					South Bound				East Bound					West Bound			
Movement:	L	-	T	-	R	L	-	T	-	R	L	-	T	-	R	L	-	T	-	R
Control:	Protected					Protected					Permitted					Permitted				
Rights:	Include					Include					Include					Include				
Min. Green:	0	0	0			0	0	0			0	0	0			0	0	0		
Lanes:	1	0	2	1	0	1	0	3	0	1	1	0	0	0	1	0	0	0	1	0
Volume Module:																				
Base Vol:	79	427	2			2	487	10			8	0	210			0	1	4		
Growth Adj:	1.07	1.07	1.07			1.07	1.07	1.07			1.07	1.07	1.07			1.07	1.07	1.07		
Initial Bse:	85	458	2			2	522	11			9	0	225			0	1	4		
Added Vol:	3	60	0			0	26	0			0	0	6			0	0	0		
Committed P:	3	6	0			0	9	0			0	0	6			0	0	0		
Initial Fut:	91	524	2			2	557	11			9	0	237			0	1	4		
User Adj:	1.00	1.00	1.00			1.00	1.00	1.00			1.00	1.00	1.00			1.00	1.00	1.00		
PHF Adj:	1.00	1.00	1.00			1.00	1.00	1.00			1.00	1.00	1.00			1.00	1.00	1.00		
PHF Volume:	91	524	2			2	557	11			9	0	237			0	1	4		
Reduct Vol:	0	0	0			0	0	0			0	0	0			0	0	0		
Reduced Vol:	91	524	2			2	557	11			9	0	237			0	1	4		
PCE Adj:	1.00	1.00	1.00			1.00	1.00	1.00			1.00	1.00	1.00			1.00	1.00	1.00		
MLF Adj:	1.00	1.00	1.00			1.00	1.00	1.00			1.00	1.00	1.00			1.00	1.00	1.00		
FinalVolume:	91	524	2			2	557	11			9	0	237			0	1	4		
Saturation Flow Module:																				
Sat/Lane:	1600	1600	1600			1600	1600	1600			1600	1600	1600			1600	1600	1600		
Adjustment:	1.06	1.06	1.06			1.06	1.06	1.06			1.06	1.06	1.06			1.06	1.06	1.06		
Lanes:	1.00	2.99	0.01			1.00	3.00	1.00			1.00	0.00	1.00			0.00	0.20	0.80		
Final Sat.:	1700	5079	21			1700	5100	1700			1700	0	1700			0	340	1360		
Capacity Analysis Module:																				
Vol/Sat:	0.05	0.10	0.10			0.00	0.11	0.01			0.01	0.00	0.14			0.00	0.00	0.00		
Crit Moves:	****						****						****			****				

Newport Banning Ranch
Year 2016 Cumulative Conditions with Project Bluff Road Alternative
AM Peak Hour

Level Of Service Computation Report
ICU 1(Loss as Cycle Length %) Method (Future Volume Alternative)

Intersection #21 Brookhurst St/PCH

Cycle (sec):	120	Critical Vol./Cap.(X):	0.646
Loss Time (sec):	6 (Y+R=4.0 sec)	Average Delay (sec/veh):	xxxxxx
Optimal Cycle:	36	Level Of Service:	B

Street Name:	Brookhurst Street						Pacific Coast HIghway					
Approach:	North Bound			South Bound			East Bound			West Bound		
Movement:	L - T - R			L - T - R			L - T - R			L - T - R		
Control:	Split Phase			Split Phase			Protected			Protected		
Rights:	Include			Include			Include			Ovl		
Min. Green:	0	0	0	0	0	0	0	0	0	0	0	0
Lanes:	1 0 0 1 0			2 0 1 0 1			1 0 3 0 1			1 0 3 0 1		
Volume Module:												
Base Vol:	4	19	12	513	6	117	166	1721	2	6	639	305
Growth Adj:	1.07	1.07	1.07	1.07	1.07	1.07	1.07	1.07	1.07	1.07	1.07	1.07
Initial Bse:	4	20	13	550	6	125	178	1845	2	6	685	327
Added Vol:	0	0	0	30	0	2	2	135	0	0	242	61
Committed P:	0	0	0	15	0	0	0	47	0	0	28	9
Initial Fut:	4	20	13	595	6	127	180	2027	2	6	955	397
User Adj:	1.00	1.00	1.00	1.00	1.00	1.00	1.00	1.00	1.00	1.00	1.00	1.00
PHF Adj:	1.00	1.00	1.00	1.00	1.00	1.00	1.00	1.00	1.00	1.00	1.00	1.00
PHF Volume:	4	20	13	595	6	127	180	2027	2	6	955	397
Reduct Vol:	0	0	0	0	0	0	0	0	0	0	0	0
Reduced Vol:	4	20	13	595	6	127	180	2027	2	6	955	397
PCE Adj:	1.00	1.00	1.00	1.00	1.00	1.00	1.00	1.00	1.00	1.00	1.00	1.00
MLF Adj:	1.00	1.00	1.00	1.00	1.00	1.00	1.00	1.00	1.00	1.00	1.00	1.00
FinalVolume:	4	20	13	595	6	127	180	2027	2	6	955	397
OvlAdjVol:												99
Saturation Flow Module:												
Sat/Lane:	1600	1600	1600	1600	1600	1600	1600	1600	1600	1600	1600	1600
Adjustment:	1.06	1.06	1.06	1.06	1.06	1.06	1.06	1.06	1.06	1.06	1.06	1.06
Lanes:	1.00	0.61	0.39	2.00	1.00	1.00	1.00	3.00	1.00	1.00	3.00	1.00
Final Sat.:	1700	1042	658	3400	1700	1700	1700	5100	1700	1700	5100	1700
Capacity Analysis Module:												
Vol/Sat:	0.00	0.02	0.02	0.17	0.00	0.07	0.11	0.40	0.00	0.00	0.19	0.23
OvlAdjV/S:												0.06
Crit Moves:		****		****				****		****		

Newport Banning Ranch
Year 2016 Cumulative Conditions with Project Bluff Road Alternative
AM Peak Hour

Level Of Service Computation Report
ICU 1(Loss as Cycle Length %) Method (Future Volume Alternative)

Intersection #22 Placentia Ave/Victoria St

Cycle (sec):	100	Critical Vol./Cap.(X):	0.863
Loss Time (sec):	0 (Y+R=4.0 sec)	Average Delay (sec/veh):	xxxxxx
Optimal Cycle:	167	Level Of Service:	D

Street Name:	Placentia Avenue						Victoria Street					
Approach:	North Bound			South Bound			East Bound			West Bound		
Movement:	L - T - R			L - T - R			L - T - R			L - T - R		
Control:	Protected			Protected			Protected			Protected		
Rights:	Include			Include			Ovl			Include		
Min. Green:	0	0	0	0	0	0	0	0	0	0	0	0
Lanes:	2 0	2 0	1	1 0	2 0	1	1 0	2 0	1	1 0	2 0	1
Volume Module:												
Base Vol:	271	404	169	122	559	45	80	1192	464	179	493	101
Growth Adj:	1.07	1.07	1.07	1.07	1.07	1.07	1.07	1.07	1.07	1.07	1.07	1.07
Initial Bse:	291	433	181	131	599	48	86	1278	497	192	528	108
Added Vol:	12	47	93	0	31	0	0	20	4	74	19	0
Committed P:	0	0	0	0	0	0	0	0	0	0	0	0
Initial Fut:	303	480	274	131	630	48	86	1298	501	266	547	108
User Adj:	1.00	1.00	1.00	1.00	1.00	1.00	1.00	1.00	1.00	1.00	1.00	1.00
PHF Adj:	1.00	1.00	1.00	1.00	1.00	1.00	1.00	1.00	1.00	1.00	1.00	1.00
PHF Volume:	303	480	274	131	630	48	86	1298	501	266	547	108
Reduct Vol:	0	0	0	0	0	0	0	0	0	0	0	0
Reduced Vol:	303	480	274	131	630	48	86	1298	501	266	547	108
PCE Adj:	1.00	1.00	1.00	1.00	1.00	1.00	1.00	1.00	1.00	1.00	1.00	1.00
MLF Adj:	1.00	1.00	1.00	1.00	1.00	1.00	1.00	1.00	1.00	1.00	1.00	1.00
FinalVolume:	303	480	274	131	630	48	86	1298	501	266	547	108
OvlAdjVol:									350			
Saturation Flow Module:												
Sat/Lane:	1600	1600	1600	1600	1600	1600	1600	1600	1600	1600	1600	1600
Adjustment:	1.00	1.00	1.00	1.00	1.00	1.00	1.00	1.00	1.00	1.00	1.00	1.00
Lanes:	2.00	2.00	1.00	1.00	2.00	1.00	1.00	2.00	1.00	1.00	2.00	1.00
Final Sat.:	3200	3200	1600	1600	3200	1600	1600	3200	1600	1600	3200	1600
Capacity Analysis Module:												
Vol/Sat:	0.09	0.15	0.17	0.08	0.20	0.03	0.05	0.41	0.31	0.17	0.17	0.07
OvlAdjV/S:									0.22			
Crit Moves:	****				****			****		****		

Newport Banning Ranch
Year 2016 Cumulative Conditions with Project Bluff Road Alternative
AM Peak Hour

Level Of Service Computation Report
ICU 1(Loss as Cycle Length %) Method (Future Volume Alternative)

Intersection #23 Pomona Ave/Victoria St

Cycle (sec):	100	Critical Vol./Cap.(X):	0.711
Loss Time (sec):	0 (Y+R=4.0 sec)	Average Delay (sec/veh):	xxxxxx
Optimal Cycle:	50	Level Of Service:	C

Street Name:	Pomona Avenue									Victoria Street								
Approach:	North Bound			South Bound			East Bound			West Bound		
Movement:	L - T - R			L - T - R			L - T - R			L - T - R		
Control:	Permitted			Permitted			Permitted			Permitted		
Rights:	Include			Include			Include			Include		
Min. Green:	0	0	0	0	0	0	0	0	0	0	0	0
Lanes:	1 0	0 1	0	1 0	0 1	0	1 0	2 0	1	1 0	2 0	1
Volume Module:												
Base Vol:	32	89	77	10	110	14	15	1486	52	86	690	18
Growth Adj:	1.07	1.07	1.07	1.07	1.07	1.07	1.07	1.07	1.07	1.07	1.07	1.07
Initial Bse:	34	95	83	11	118	15	16	1593	56	92	740	19
Added Vol:	1	0	3	0	0	0	0	113	0	0	92	0
Committed P:	0	0	0	0	0	0	0	0	0	0	0	0
Initial Fut:	35	95	86	11	118	15	16	1706	56	92	832	19
User Adj:	1.00	1.00	1.00	1.00	1.00	1.00	1.00	1.00	1.00	1.00	1.00	1.00
PHF Adj:	1.00	1.00	1.00	1.00	1.00	1.00	1.00	1.00	1.00	1.00	1.00	1.00
PHF Volume:	35	95	86	11	118	15	16	1706	56	92	832	19
Reduct Vol:	0	0	0	0	0	0	0	0	0	0	0	0
Reduced Vol:	35	95	86	11	118	15	16	1706	56	92	832	19
PCE Adj:	1.00	1.00	1.00	1.00	1.00	1.00	1.00	1.00	1.00	1.00	1.00	1.00
MLF Adj:	1.00	1.00	1.00	1.00	1.00	1.00	1.00	1.00	1.00	1.00	1.00	1.00
FinalVolume:	35	95	86	11	118	15	16	1706	56	92	832	19
Saturation Flow Module:												
Sat/Lane:	1600	1600	1600	1600	1600	1600	1600	1600	1600	1600	1600	1600
Adjustment:	1.00	1.00	1.00	1.00	1.00	1.00	1.00	1.00	1.00	1.00	1.00	1.00
Lanes:	1.00	0.53	0.47	1.00	0.89	0.11	1.00	2.00	1.00	1.00	2.00	1.00
Final Sat.:	1600	844	756	1600	1419	181	1600	3200	1600	1600	3200	1600
Capacity Analysis Module:												
Vol/Sat:	0.02	0.11	0.11	0.01	0.08	0.08	0.01	0.53	0.03	0.06	0.26	0.01
Crit Moves:		****		****				****		****		

Newport Banning Ranch
Year 2016 Cumulative Conditions with Project Bluff Road Alternative
AM Peak Hour

Level Of Service Computation Report
ICU 1(Loss as Cycle Length %) Method (Future Volume Alternative)

Intersection #24 Harbor Blvd/Victoria St

Cycle (sec):	100	Critical Vol./Cap.(X):	0.796
Loss Time (sec):	0 (Y+R=4.0 sec)	Average Delay (sec/veh):	xxxxxx
Optimal Cycle:	112	Level Of Service:	C

Street Name:	Harbor Boulevard									Victoria Street								
Approach:	North Bound			South Bound			East Bound			West Bound		
Movement:	L	- T	- R	L	- T	- R	L	- T	- R	L	- T	- R
Control:	Protected			Protected			Protected			Protected		
Rights:	Include			Ovl			Include			Include		
Min. Green:	0	0	0	0	0	0	0	0	0	0	0	0
Lanes:	1 0	3 0	1	1 0	3 0	1	2 0	1 1	0	2 0	2 0	1
Volume Module:												
Base Vol:	60	615	90	119	933	166	248	1272	89	135	623	109
Growth Adj:	1.07	1.07	1.07	1.07	1.07	1.07	1.07	1.07	1.07	1.07	1.07	1.07
Initial Bse:	64	659	96	128	1000	178	266	1364	95	145	668	117
Added Vol:	5	106	27	2	49	9	18	97	1	8	78	5
Committed P:	0	0	0	0	0	0	0	0	0	0	0	0
Initial Fut:	69	765	123	130	1049	187	284	1461	96	153	746	122
User Adj:	1.00	1.00	1.00	1.00	1.00	1.00	1.00	1.00	1.00	1.00	1.00	1.00
PHF Adj:	1.00	1.00	1.00	1.00	1.00	1.00	1.00	1.00	1.00	1.00	1.00	1.00
PHF Volume:	69	765	123	130	1049	187	284	1461	96	153	746	122
Reduct Vol:	0	0	0	0	0	0	0	0	0	0	0	0
Reduced Vol:	69	765	123	130	1049	187	284	1461	96	153	746	122
PCE Adj:	1.00	1.00	1.00	1.00	1.00	1.00	1.00	1.00	1.00	1.00	1.00	1.00
MLF Adj:	1.00	1.00	1.00	1.00	1.00	1.00	1.00	1.00	1.00	1.00	1.00	1.00
FinalVolume:	69	765	123	130	1049	187	284	1461	96	153	746	122
OvlAdjVol:						45						
Saturation Flow Module:												
Sat/Lane:	1600	1600	1600	1600	1600	1600	1600	1600	1600	1600	1600	1600
Adjustment:	1.00	1.00	1.00	1.00	1.00	1.00	1.00	1.00	1.00	1.00	1.00	1.00
Lanes:	1.00	3.00	1.00	1.00	3.00	1.00	2.00	1.88	0.12	2.00	2.00	1.00
Final Sat.:	1600	4800	1600	1600	4800	1600	3200	3002	198	3200	3200	1600
Capacity Analysis Module:												
Vol/Sat:	0.04	0.16	0.08	0.08	0.22	0.12	0.09	0.49	0.49	0.05	0.23	0.08
OvlAdjV/S:						0.03						
Crit Moves:	****				****			****			****	

Newport Banning Ranch
Year 2016 Cumulative Conditions with Project Bluff Road Alternative
AM Peak Hour

Level Of Service Computation Report
ICU 1(Loss as Cycle Length %) Method (Future Volume Alternative)

Intersection #25 Newport Blvd/Victoria St [Ramp]

Cycle (sec): 120 Critical Vol./Cap.(X): 0.621
Loss Time (sec): 0 (Y+R=4.0 sec) Average Delay (sec/veh): xxxxxx
Optimal Cycle: 49 Level Of Service: B

Street Name:	Newport Boulevard						Victoria Street					
Approach:	North Bound			South Bound			East Bound			West Bound		
Movement:	L - T - R			L - T - R			L - T - R			L - T - R		
Control:	Permitted			Permitted			Protected			Protected		
Rights:	Include			Ignore			Include			Include		
Min. Green:	0	0	0	0	0	0	0	0	0	0	0	0
Lanes:	0 0 0 0 0			1 1 2 0 1			0 0 2 1 0			1 0 1 0 0		
Volume Module:												
Base Vol:	0	0	0	304	706	749	0	1629	30	77	279	0
Growth Adj:	1.07	1.07	1.07	1.07	1.07	1.07	1.07	1.07	1.07	1.07	1.07	1.07
Initial Bse:	0	0	0	326	757	803	0	1746	32	83	299	0
Added Vol:	0	0	0	14	0	88	0	133	0	0	0	0
Committed P:	0	0	0	0	0	0	0	0	0	0	0	0
Initial Fut:	0	0	0	340	757	891	0	1879	32	83	299	0
User Adj:	1.00	1.00	1.00	1.00	1.00	0.00	1.00	1.00	1.00	1.00	1.00	1.00
PHF Adj:	1.00	1.00	1.00	1.00	1.00	0.00	1.00	1.00	1.00	1.00	1.00	1.00
PHF Volume:	0	0	0	340	757	0	0	1879	32	83	299	0
Reduct Vol:	0	0	0	0	0	0	0	0	0	0	0	0
Reduced Vol:	0	0	0	340	757	0	0	1879	32	83	299	0
PCE Adj:	1.00	1.00	1.00	1.00	1.00	0.00	1.00	1.00	1.00	1.00	1.00	1.00
MLF Adj:	1.00	1.00	1.00	1.00	1.00	0.00	1.00	1.00	1.00	1.00	1.00	1.00
FinalVolume:	0	0	0	340	757	0	0	1879	32	83	299	0
Saturation Flow Module:												
Sat/Lane:	1600	1600	1600	1600	1600	1600	1600	1600	1600	1600	1600	1600
Adjustment:	1.00	1.00	1.00	1.00	1.00	1.00	1.00	1.00	1.00	1.00	1.00	1.00
Lanes:	0.00	0.00	0.00	1.24	2.76	1.00	0.00	2.95	0.05	1.00	1.00	0.00
Final Sat.:	0	0	0	1983	4417	1600	0	4719	81	1600	1600	0
Capacity Analysis Module:												
Vol/Sat:	0.00	0.00	0.00	0.17	0.17	0.00	0.00	0.40	0.40	0.05	0.19	0.00
Crit Moves:				****				****		****		

Newport Banning Ranch
Year 2016 Cumulative Conditions with Project Bluff Road Alternative
AM Peak Hour

Level Of Service Computation Report
ICU 1(Loss as Cycle Length %) Method (Future Volume Alternative)

Intersection #26 Newport Blvd /Victoria St (22nd St) [Ramp]

Cycle (sec):	120	Critical Vol./Cap.(X):	1.104
Loss Time (sec):	0 (Y+R=4.0 sec)	Average Delay (sec/veh):	xxxxxx
Optimal Cycle:	180	Level Of Service:	F

Street Name:	Newport Boulevard						Victoria Street (22nd Street)					
Approach:	North Bound			South Bound			East Bound			West Bound		
Movement:	L - T - R			L - T - R			L - T - R			L - T - R		
Control:	Permitted			Permitted			Protected			Protected		
Rights:	Include			Include			Include			Include		
Min. Green:	0	0	0	0	0	0	0	0	0	0	0	0
Lanes:	0 1 2	0 1		0 0	0 0		2 0	2 0	0	0 0	1 0	1
Volume Module:												
Base Vol:	87	1212	32	0	0	0	1587	316	0	0	266	316
Growth Adj:	1.07	1.07	1.07	1.07	1.07	1.07	1.07	1.07	1.07	1.07	1.07	1.07
Initial Bse:	93	1299	34	0	0	0	1701	339	0	0	285	339
Added Vol:	0	0	0	0	0	0	133	14	0	0	0	47
Committed P:	0	0	0	0	0	0	0	0	0	0	0	0
Initial Fut:	93	1299	34	0	0	0	1834	353	0	0	285	386
User Adj:	1.00	1.00	1.00	1.00	1.00	1.00	1.00	1.00	1.00	1.00	1.00	1.00
PHF Adj:	1.00	1.00	1.00	1.00	1.00	1.00	1.00	1.00	1.00	1.00	1.00	1.00
PHF Volume:	93	1299	34	0	0	0	1834	353	0	0	285	386
Reduct Vol:	0	0	0	0	0	0	0	0	0	0	0	0
Reduced Vol:	93	1299	34	0	0	0	1834	353	0	0	285	386
PCE Adj:	1.00	1.00	1.00	1.00	1.00	1.00	1.00	1.00	1.00	1.00	1.00	1.00
MLF Adj:	1.00	1.00	1.00	1.00	1.00	1.00	1.00	1.00	1.00	1.00	1.00	1.00
FinalVolume:	93	1299	34	0	0	0	1834	353	0	0	285	386
Saturation Flow Module:												
Sat/Lane:	1600	1600	1600	1600	1600	1600	1600	1600	1600	1600	1600	1600
Adjustment:	1.00	1.00	1.00	1.00	1.00	1.00	1.00	1.00	1.00	1.00	1.00	1.00
Lanes:	0.20	2.80	1.00	0.00	0.00	0.00	2.00	2.00	0.00	0.00	1.00	1.00
Final Sat.:	321	4479	1600	0	0	0	3200	3200	0	0	1600	1600
Capacity Analysis Module:												
Vol/Sat:	0.06	0.29	0.02	0.00	0.00	0.00	0.57	0.11	0.00	0.00	0.18	0.24
Crit Moves:		****					****					****

Newport Banning Ranch
Year 2016 Cumulative Conditions with Project Bluff Road Alternative
AM Peak Hour

Level Of Service Computation Report
2000 HCM 4-Way Stop Method (Future Volume Alternative)

Intersection #27 Whittier Ave/19th St

Cycle (sec):	100	Critical Vol./Cap.(X):	0.378
Loss Time (sec):	0 (Y+R=4.0 sec)	Average Delay (sec/veh):	10.3
Optimal Cycle:	0	Level Of Service:	B

Street Name:	Whittier Avenue						19th St					
Approach:	North Bound			South Bound			East Bound			West Bound		
Movement:	L -	T -	R	L -	T -	R	L -	T -	R	L -	T -	R
Control:	Stop Sign			Stop Sign			Stop Sign			Stop Sign		
Rights:	Include			Include			Include			Include		
Min. Green:	0	0	0	0	0	0	0	0	0	0	0	0
Lanes:	0 0	1! 0	0	0 1	0 0	0	1 0	0 1	0	1 0	0 1	0
Volume Module:												
Base Vol:	5	6	258	10	6	0	1	123	7	210	29	10
Growth Adj:	1.07	1.07	1.07	1.07	1.07	1.07	1.07	1.07	1.07	1.07	1.07	1.07
Initial Bse:	5	6	277	11	6	0	1	132	8	225	31	11
Added Vol:	0	0	0	0	0	0	0	0	0	0	0	0
Committed P:	0	0	0	0	0	0	0	0	0	0	0	0
Initial Fut:	5	6	277	11	6	0	1	132	8	225	31	11
User Adj:	1.00	1.00	1.00	1.00	1.00	1.00	1.00	1.00	1.00	1.00	1.00	1.00
PHF Adj:	1.00	1.00	1.00	1.00	1.00	1.00	1.00	1.00	1.00	1.00	1.00	1.00
PHF Volume:	5	6	277	11	6	0	1	132	8	225	31	11
Reduct Vol:	0	0	0	0	0	0	0	0	0	0	0	0
Reduced Vol:	5	6	277	11	6	0	1	132	8	225	31	11
PCE Adj:	1.00	1.00	1.00	1.00	1.00	1.00	1.00	1.00	1.00	1.00	1.00	1.00
MLF Adj:	1.00	1.00	1.00	1.00	1.00	1.00	1.00	1.00	1.00	1.00	1.00	1.00
FinalVolume:	5	6	277	11	6	0	1	132	8	225	31	11
Saturation Flow Module:												
Adjustment:	1.00	1.00	1.00	1.00	1.00	1.00	1.00	1.00	1.00	1.00	1.00	1.00
Lanes:	0.02	0.02	0.96	0.62	0.38	0.00	1.00	0.95	0.05	1.00	0.74	0.26
Final Sat.:	14	17	740	376	225	0	572	593	34	595	497	172
Capacity Analysis Module:												
Vol/Sat:	0.37	0.37	0.37	0.03	0.03	xxxx	0.00	0.22	0.22	0.38	0.06	0.06
Crit Moves:	****				****			****		****		
Delay/Veh:	9.9	9.9	9.9	8.6	8.6	0.0	8.7	9.6	9.6	11.9	8.2	8.2
Delay Adj:	1.00	1.00	1.00	1.00	1.00	1.00	1.00	1.00	1.00	1.00	1.00	1.00
AdjDel/Veh:	9.9	9.9	9.9	8.6	8.6	0.0	8.7	9.6	9.6	11.9	8.2	8.2
LOS by Move:	A	A	A	A	A	*	A	A	A	B	A	A
ApproachDel:	9.9			8.6			9.6			11.3		
Delay Adj:	1.00			1.00			1.00			1.00		
ApprAdjDel:	9.9			8.6			9.6			11.3		
LOS by Appr:	A			A			A			B		
AllWayAvgQ:	0.5	0.5	0.5	0.0	0.0	0.0	0.0	0.3	0.3	0.6	0.1	0.1

Newport Banning Ranch
Year 2016 Cumulative Conditions with Project Bluff Road Alternative
AM Peak Hour

Note: Queue reported is the number of cars per lane.
****

Newport Banning Ranch
Year 2016 Cumulative Conditions with Project Bluff Road Alternative
AM Peak Hour

Level Of Service Computation Report
2000 HCM 4-Way Stop Method (Future Volume Alternative)

Intersection #28 Monrovia Ave/19th St

Cycle (sec):	100	Critical Vol./Cap.(X):	0.845
Loss Time (sec):	0 (Y+R=4.0 sec)	Average Delay (sec/veh):	21.1
Optimal Cycle:	0	Level Of Service:	C

Street Name:	Monrovia Avenue						19th Street					
Approach:	North Bound			South Bound			East Bound			West Bound		
Movement:	L - T - R			L - T - R			L - T - R			L - T - R		
Control:	Stop Sign			Stop Sign			Stop Sign			Stop Sign		
Rights:	Include			Include			Include			Include		
Min. Green:	0	0	0	0	0	0	0	0	0	0	0	0
Lanes:	0 1	0 0	1	0 0	1!	0 0	1	0 1	0 1	1	0 1	0 1
Volume Module:												
Base Vol:	31	10	162	79	19	1	4	403	34	154	213	30
Growth Adj:	1.07	1.07	1.07	1.07	1.07	1.07	1.07	1.07	1.07	1.07	1.07	1.07
Initial Bse:	33	11	174	85	20	1	4	432	36	165	228	32
Added Vol:	0	11	9	0	15	0	0	0	0	10	0	0
Committed P:	0	0	0	0	0	0	0	0	0	0	0	0
Initial Fut:	33	22	183	85	35	1	4	432	36	175	228	32
User Adj:	1.00	1.00	1.00	1.00	1.00	1.00	1.00	1.00	1.00	1.00	1.00	1.00
PHF Adj:	1.00	1.00	1.00	1.00	1.00	1.00	1.00	1.00	1.00	1.00	1.00	1.00
PHF Volume:	33	22	183	85	35	1	4	432	36	175	228	32
Reduct Vol:	0	0	0	0	0	0	0	0	0	0	0	0
Reduced Vol:	33	22	183	85	35	1	4	432	36	175	228	32
PCE Adj:	1.00	1.00	1.00	1.00	1.00	1.00	1.00	1.00	1.00	1.00	1.00	1.00
MLF Adj:	1.00	1.00	1.00	1.00	1.00	1.00	1.00	1.00	1.00	1.00	1.00	1.00
FinalVolume:	33	22	183	85	35	1	4	432	36	175	228	32
Saturation Flow Module:												
Adjustment:	1.00	1.00	1.00	1.00	1.00	1.00	1.00	1.00	1.00	1.00	1.00	1.00
Lanes:	0.60	0.40	1.00	0.70	0.29	0.01	1.00	1.00	1.00	1.00	1.00	1.00
Final Sat.:	269	176	509	302	126	4	468	511	556	458	490	534
Capacity Analysis Module:												
Vol/Sat:	0.12	0.12	0.36	0.28	0.28	0.28	0.01	0.84	0.07	0.38	0.47	0.06
Crit Moves:			****			****		****			****	
Delay/Veh:	11.3	11.3	12.6	13.4	13.4	13.4	10.2	35.6	9.4	14.7	15.5	9.5
Delay Adj:	1.00	1.00	1.00	1.00	1.00	1.00	1.00	1.00	1.00	1.00	1.00	1.00
AdjDel/Veh:	11.3	11.3	12.6	13.4	13.4	13.4	10.2	35.6	9.4	14.7	15.5	9.5
LOS by Move:	B	B	B	B	B	B	B	E	A	B	C	A
ApproachDel:	12.3			13.4			33.3			14.7		
Delay Adj:	1.00			1.00			1.00			1.00		
ApprAdjDel:	12.3			13.4			33.3			14.7		
LOS by Appr:	B			B			D			B		
AllWayAvgQ:	0.1	0.1	0.5	0.3	0.3	0.3	0.0	3.7	0.1	0.6	0.8	0.1

Newport Banning Ranch
Year 2016 Cumulative Conditions with Project Bluff Road Alternative
AM Peak Hour

Note: Queue reported is the number of cars per lane.
****

Newport Banning Ranch
Year 2016 Cumulative Conditions with Project Bluff Road Alternative
AM Peak Hour

Level Of Service Computation Report
ICU 1(Loss as Cycle Length %) Method (Future Volume Alternative)

Intersection #29 Placentia Ave/19th St

Cycle (sec):	100	Critical Vol./Cap.(X):	0.551
Loss Time (sec):	0 (Y+R=4.0 sec)	Average Delay (sec/veh):	xxxxxx
Optimal Cycle:	51	Level Of Service:	A

Street Name:	Placentia Avenue						19th Street					
Approach:	North Bound			South Bound			East Bound			West Bound		
Movement:	L - T - R			L - T - R			L - T - R			L - T - R		
Control:	Protected			Protected			Protected			Protected		
Rights:	Include			Include			Include			Include		
Min. Green:	0	0	0	0	0	0	0	0	0	0	0	0
Lanes:	1 0 2	0 1		1 0 1	1 0		2 0 1	1 0		2 0 2	0 1	
Volume Module:												
Base Vol:	31	412	217	140	495	115	201	582	33	219	328	165
Growth Adj:	1.07	1.07	1.07	1.07	1.07	1.07	1.07	1.07	1.07	1.07	1.07	1.07
Initial Bse:	33	442	233	150	531	123	215	624	35	235	352	177
Added Vol:	0	96	19	8	124	0	0	9	0	6	10	0
Committed P:	0	1	0	0	0	0	0	0	0	0	0	0
Initial Fut:	33	539	252	158	655	123	215	633	35	241	362	177
User Adj:	1.00	1.00	1.00	1.00	1.00	1.00	1.00	1.00	1.00	1.00	1.00	1.00
PHF Adj:	1.00	1.00	1.00	1.00	1.00	1.00	1.00	1.00	1.00	1.00	1.00	1.00
PHF Volume:	33	539	252	158	655	123	215	633	35	241	362	177
Reduct Vol:	0	0	0	0	0	0	0	0	0	0	0	0
Reduced Vol:	33	539	252	158	655	123	215	633	35	241	362	177
PCE Adj:	1.00	1.00	1.00	1.00	1.00	1.00	1.00	1.00	1.00	1.00	1.00	1.00
MLF Adj:	1.00	1.00	1.00	1.00	1.00	1.00	1.00	1.00	1.00	1.00	1.00	1.00
FinalVolume:	33	539	252	158	655	123	215	633	35	241	362	177
Saturation Flow Module:												
Sat/Lane:	1600	1600	1600	1600	1600	1600	1600	1600	1600	1600	1600	1600
Adjustment:	1.00	1.00	1.00	1.00	1.00	1.00	1.00	1.00	1.00	1.00	1.00	1.00
Lanes:	1.00	2.00	1.00	1.00	1.68	0.32	2.00	1.89	0.11	2.00	2.00	1.00
Final Sat.:	1600	3200	1600	1600	2693	507	3200	3031	169	3200	3200	1600
Capacity Analysis Module:												
Vol/Sat:	0.02	0.17	0.16	0.10	0.24	0.24	0.07	0.21	0.21	0.08	0.11	0.11
Crit Moves:		****		****				****		****		

Newport Banning Ranch
Year 2016 Cumulative Conditions with Project Bluff Road Alternative
AM Peak Hour

Level Of Service Computation Report
ICU 1(Loss as Cycle Length %) Method (Future Volume Alternative)

Intersection #30 Pomona Ave/19th St

Cycle (sec):	100	Critical Vol./Cap.(X):	0.514
Loss Time (sec):	0 (Y+R=4.0 sec)	Average Delay (sec/veh):	xxxxxx
Optimal Cycle:	47	Level Of Service:	A

Street Name:	Pomona Avenue						19th Street					
Approach:	North Bound			South Bound			East Bound			West Bound		
Movement:	L - T - R			L - T - R			L - T - R			L - T - R		
Control:	Protected			Protected			Prot+Permit			Prot+Permit		
Rights:	Include			Include			Include			Include		
Min. Green:	0	0	0	0	0	0	0	0	0	0	0	0
Lanes:	1 0 0 1 0			1 0 0 1 0			1 0 1 1 0			1 0 1 1 0		
Volume Module:												
Base Vol:	36	75	71	52	94	36	38	847	39	104	615	26
Growth Adj:	1.07	1.07	1.07	1.07	1.07	1.07	1.07	1.07	1.07	1.07	1.07	1.07
Initial Bse:	39	80	76	56	101	39	41	908	42	111	659	28
Added Vol:	0	3	3	0	0	0	0	36	0	0	16	1
Committed P:	0	0	0	0	0	0	0	0	0	0	0	0
Initial Fut:	39	83	79	56	101	39	41	944	42	111	675	29
User Adj:	1.00	1.00	1.00	1.00	1.00	1.00	1.00	1.00	1.00	1.00	1.00	1.00
PHF Adj:	1.00	1.00	1.00	1.00	1.00	1.00	1.00	1.00	1.00	1.00	1.00	1.00
PHF Volume:	39	83	79	56	101	39	41	944	42	111	675	29
Reduct Vol:	0	0	0	0	0	0	0	0	0	0	0	0
Reduced Vol:	39	83	79	56	101	39	41	944	42	111	675	29
PCE Adj:	1.00	1.00	1.00	1.00	1.00	1.00	1.00	1.00	1.00	1.00	1.00	1.00
MLF Adj:	1.00	1.00	1.00	1.00	1.00	1.00	1.00	1.00	1.00	1.00	1.00	1.00
FinalVolume:	39	83	79	56	101	39	41	944	42	111	675	29
Saturation Flow Module:												
Sat/Lane:	1600	1600	1600	1600	1600	1600	1600	1600	1600	1600	1600	1600
Adjustment:	1.00	1.00	1.00	1.00	1.00	1.00	1.00	1.00	1.00	1.00	1.00	1.00
Lanes:	1.00	0.51	0.49	1.00	0.72	0.28	1.00	1.92	0.08	1.00	1.92	0.08
Final Sat.:	1600	821	779	1600	1157	443	1600	3064	136	1600	3069	131
Capacity Analysis Module:												
Vol/Sat:	0.02	0.10	0.10	0.03	0.09	0.09	0.03	0.31	0.31	0.07	0.22	0.22
Crit Moves:		****		****				****		****		

Newport Banning Ranch
Year 2016 Cumulative Conditions with Project Bluff Road Alternative
AM Peak Hour

Level Of Service Computation Report
ICU 1(Loss as Cycle Length %) Method (Future Volume Alternative)

Intersection #31 Anaheim Ave/19th St

Cycle (sec):	100	Critical Vol./Cap.(X):	0.515
Loss Time (sec):	0 (Y+R=4.0 sec)	Average Delay (sec/veh):	xxxxxx
Optimal Cycle:	38	Level Of Service:	A

Street Name:	Anaheim Avenue						19th Street					
Approach:	North Bound			South Bound			East Bound			West Bound		
Movement:	L - T - R			L - T - R			L - T - R			L - T - R		
Control:	Permitted			Permitted			Prot+Permit			Prot+Permit		
Rights:	Include			Include			Include			Include		
Min. Green:	0	0	0	0	0	0	0	0	0	0	0	0
Lanes:	1 0 0 1 0			1 0 0 1 0			1 0 1 1 0			1 0 2 0 1		
Volume Module:												
Base Vol:	27	26	88	41	41	23	24	961	18	103	724	33
Growth Adj:	1.07	1.07	1.07	1.07	1.07	1.07	1.07	1.07	1.07	1.07	1.07	1.07
Initial Bse:	29	28	94	44	44	25	26	1030	19	110	776	35
Added Vol:	0	0	0	0	0	0	0	44	0	0	17	0
Committed P:	0	0	0	0	0	0	0	0	0	0	0	0
Initial Fut:	29	28	94	44	44	25	26	1074	19	110	793	35
User Adj:	1.00	1.00	1.00	1.00	1.00	1.00	1.00	1.00	1.00	1.00	1.00	1.00
PHF Adj:	1.00	1.00	1.00	1.00	1.00	1.00	1.00	1.00	1.00	1.00	1.00	1.00
PHF Volume:	29	28	94	44	44	25	26	1074	19	110	793	35
Reduct Vol:	0	0	0	0	0	0	0	0	0	0	0	0
Reduced Vol:	29	28	94	44	44	25	26	1074	19	110	793	35
PCE Adj:	1.00	1.00	1.00	1.00	1.00	1.00	1.00	1.00	1.00	1.00	1.00	1.00
MLF Adj:	1.00	1.00	1.00	1.00	1.00	1.00	1.00	1.00	1.00	1.00	1.00	1.00
FinalVolume:	29	28	94	44	44	25	26	1074	19	110	793	35
Saturation Flow Module:												
Sat/Lane:	1600	1600	1600	1600	1600	1600	1600	1600	1600	1600	1600	1600
Adjustment:	1.00	1.00	1.00	1.00	1.00	1.00	1.00	1.00	1.00	1.00	1.00	1.00
Lanes:	1.00	0.23	0.77	1.00	0.64	0.36	1.00	1.96	0.04	1.00	2.00	1.00
Final Sat.:	1600	365	1235	1600	1025	575	1600	3144	56	1600	3200	1600
Capacity Analysis Module:												
Vol/Sat:	0.02	0.08	0.08	0.03	0.04	0.04	0.02	0.34	0.34	0.07	0.25	0.02
Crit Moves:		****		****				****		****		

Newport Banning Ranch
Year 2016 Cumulative Conditions with Project Bluff Road Alternative
AM Peak Hour

Level Of Service Computation Report
ICU 1(Loss as Cycle Length %) Method (Future Volume Alternative)

Intersection #32 Park Ave/19th St

Cycle (sec):	100	Critical Vol./Cap.(X):	0.488
Loss Time (sec):	0 (Y+R=4.0 sec)	Average Delay (sec/veh):	xxxxxx
Optimal Cycle:	36	Level Of Service:	A

Street Name:	Park Avenue						19th St					
Approach:	North Bound			South Bound			East Bound			West Bound		
Movement:	L - T - R			L - T - R			L - T - R			L - T - R		
Control:	Permitted			Permitted			Prot+Permit			Prot+Permit		
Rights:	Include			Include			Include			Include		
Min. Green:	0	0	0	0	0	0	0	0	0	0	0	0
Lanes:	2 0	0 0	1	0 0	0 0	0	1 0	2 0	1	1 0	3 0	0
Volume Module:												
Base Vol:	43	0	108	0	0	0	6	1012	60	94	800	0
Growth Adj:	1.07	1.07	1.07	1.07	1.07	1.07	1.07	1.07	1.07	1.07	1.07	1.07
Initial Bse:	46	0	116	0	0	0	6	1085	64	101	858	0
Added Vol:	0	0	0	0	0	0	0	44	0	0	17	0
Committed P:	0	0	0	0	0	0	0	0	0	0	0	0
Initial Fut:	46	0	116	0	0	0	6	1129	64	101	875	0
User Adj:	1.00	1.00	1.00	1.00	1.00	1.00	1.00	1.00	1.00	1.00	1.00	1.00
PHF Adj:	1.00	1.00	1.00	1.00	1.00	1.00	1.00	1.00	1.00	1.00	1.00	1.00
PHF Volume:	46	0	116	0	0	0	6	1129	64	101	875	0
Reduct Vol:	0	0	0	0	0	0	0	0	0	0	0	0
Reduced Vol:	46	0	116	0	0	0	6	1129	64	101	875	0
PCE Adj:	1.00	1.00	1.00	1.00	1.00	1.00	1.00	1.00	1.00	1.00	1.00	1.00
MLF Adj:	1.00	1.00	1.00	1.00	1.00	1.00	1.00	1.00	1.00	1.00	1.00	1.00
FinalVolume:	46	0	116	0	0	0	6	1129	64	101	875	0
Saturation Flow Module:												
Sat/Lane:	1600	1600	1600	1600	1600	1600	1600	1600	1600	1600	1600	1600
Adjustment:	1.00	1.00	1.00	1.00	1.00	1.00	1.00	1.00	1.00	1.00	1.00	1.00
Lanes:	2.00	0.00	1.00	0.00	0.00	0.00	1.00	2.00	1.00	1.00	3.00	0.00
Final Sat.:	3200	0	1600	0	0	0	1600	3200	1600	1600	4800	0
Capacity Analysis Module:												
Vol/Sat:	0.01	0.00	0.07	0.00	0.00	0.00	0.00	0.35	0.04	0.06	0.18	0.00
Crit Moves:			****					****		****		

Newport Banning Ranch
Year 2016 Cumulative Conditions with Project Bluff Road Alternative
AM Peak Hour

Level Of Service Computation Report
ICU 1(Loss as Cycle Length %) Method (Future Volume Alternative)

Intersection #33 Harbor Blvd/19th St

Cycle (sec):	100	Critical Vol./Cap.(X):	0.441
Loss Time (sec):	0 (Y+R=4.0 sec)	Average Delay (sec/veh):	xxxxxx
Optimal Cycle:	41	Level Of Service:	A

Street Name:	Harbor Boulevard						19th Street					
Approach:	North Bound			South Bound			East Bound			West Bound		
Movement:	L - T - R			L - T - R			L - T - R			L - T - R		
Control:	Protected			Protected			Protected			Protected		
Rights:	Include			Include			Include			Include		
Min. Green:	0	0	0	0	0	0	0	0	0	0	0	0
Lanes:	1 0 2	1 0		1 0 2	0 1		2 0 2	1 0		1 0 3	0 1	
Volume Module:												
Base Vol:	18	287	14	141	425	260	216	928	37	36	630	161
Growth Adj:	1.07	1.07	1.07	1.07	1.07	1.07	1.07	1.07	1.07	1.07	1.07	1.07
Initial Bse:	19	308	15	151	456	279	232	995	40	39	675	173
Added Vol:	1	67	0	5	38	15	32	2	10	0	0	1
Committed P:	3	5	0	0	6	0	0	0	2	0	0	0
Initial Fut:	23	380	15	156	500	294	264	997	52	39	675	174
User Adj:	1.00	1.00	1.00	1.00	1.00	1.00	1.00	1.00	1.00	1.00	1.00	1.00
PHF Adj:	1.00	1.00	1.00	1.00	1.00	1.00	1.00	1.00	1.00	1.00	1.00	1.00
PHF Volume:	23	380	15	156	500	294	264	997	52	39	675	174
Reduct Vol:	0	0	0	0	0	0	0	0	0	0	0	0
Reduced Vol:	23	380	15	156	500	294	264	997	52	39	675	174
PCE Adj:	1.00	1.00	1.00	1.00	1.00	1.00	1.00	1.00	1.00	1.00	1.00	1.00
MLF Adj:	1.00	1.00	1.00	1.00	1.00	1.00	1.00	1.00	1.00	1.00	1.00	1.00
FinalVolume:	23	380	15	156	500	294	264	997	52	39	675	174
Saturation Flow Module:												
Sat/Lane:	1600	1600	1600	1600	1600	1600	1600	1600	1600	1600	1600	1600
Adjustment:	1.00	1.00	1.00	1.00	1.00	1.00	1.00	1.00	1.00	1.00	1.00	1.00
Lanes:	1.00	2.89	0.11	1.00	2.00	1.00	2.00	2.85	0.15	1.00	3.00	1.00
Final Sat.:	1600	4617	183	1600	3200	1600	3200	4563	237	1600	4800	1600
Capacity Analysis Module:												
Vol/Sat:	0.01	0.08	0.08	0.10	0.16	0.18	0.08	0.22	0.22	0.02	0.14	0.11
Crit Moves:	****					****		****		****		

Newport Banning Ranch
Year 2016 Cumulative Conditions with Project Bluff Road Alternative
AM Peak Hour

Level Of Service Computation Report
ICU 1(Loss as Cycle Length %) Method (Future Volume Alternative)

Intersection #34 Newport Blvd/19th St

Cycle (sec):	120	Critical Vol./Cap.(X):	0.906
Loss Time (sec):	0 (Y+R=4.0 sec)	Average Delay (sec/veh):	xxxxxx
Optimal Cycle:	180	Level Of Service:	E

Street Name:	Newport Boulevard									19th Street								
Approach:	North Bound			South Bound			East Bound			West Bound		
Movement:	L	- T	- R	L	- T	- R	L	- T	- R	L	- T	- R
Control:	Protected			Protected			Split Phase			Split Phase		
Rights:	Include			Include			Include			Include		
Min. Green:	0	0	0	0	0	0	0	0	0	0	0	0
Lanes:	1 0	3 1	0	1 0	3 1	1	2 1	1 0	1	1 0	2 1	1
Volume Module:												
Base Vol:	31	2709	9	181	2440	486	886	183	14	21	162	237
Growth Adj:	1.07	1.07	1.07	1.07	1.07	1.07	1.07	1.07	1.07	1.07	1.07	1.07
Initial Bse:	33	2904	10	194	2616	521	950	196	15	23	174	254
Added Vol:	0	318	0	0	129	0	2	6	0	10	1	0
Committed P:	0	12	1	0	9	0	0	0	2	0	0	0
Initial Fut:	33	3234	11	194	2754	521	952	202	17	33	175	254
User Adj:	1.00	1.00	1.00	1.00	1.00	1.00	1.00	1.00	1.00	1.00	1.00	1.00
PHF Adj:	1.00	1.00	1.00	1.00	1.00	1.00	1.00	1.00	1.00	1.00	1.00	1.00
PHF Volume:	33	3234	11	194	2754	521	952	202	17	33	175	254
Reduct Vol:	0	0	0	0	0	0	0	0	0	0	0	0
Reduced Vol:	33	3234	11	194	2754	521	952	202	17	33	175	254
PCE Adj:	1.00	1.00	1.00	1.00	1.00	1.00	1.00	1.00	1.00	1.00	1.00	1.00
MLF Adj:	1.00	1.00	1.00	1.00	1.00	1.00	1.00	1.00	1.00	1.00	1.00	1.00
FinalVolume:	33	3234	11	194	2754	521	952	202	17	33	175	254
Saturation Flow Module:												
Sat/Lane:	1600	1600	1600	1600	1600	1600	1600	1600	1600	1600	1600	1600
Adjustment:	1.00	1.00	1.00	1.00	1.00	1.00	1.00	1.00	1.00	1.00	1.00	1.00
Lanes:	1.00	3.99	0.01	1.00	4.00	1.00	3.00	1.00	1.00	1.00	2.00	2.00
Final Sat.:	1600	6379	21	1600	6400	1600	4800	1600	1600	1600	3200	3200
Capacity Analysis Module:												
Vol/Sat:	0.02	0.51	0.51	0.12	0.43	0.33	0.20	0.13	0.01	0.02	0.05	0.08
Crit Moves:		****		****			****					****

Newport Banning Ranch
Year 2016 Cumulative Conditions with Project Bluff Road Alternative
AM Peak Hour

Level Of Service Computation Report
ICU 1(Loss as Cycle Length %) Method (Future Volume Alternative)

Intersection #35 Newport Blvd/Broadway

Cycle (sec):	120	Critical Vol./Cap.(X):	0.649
Loss Time (sec):	0 (Y+R=4.0 sec)	Average Delay (sec/veh):	xxxxxx
Optimal Cycle:	53	Level Of Service:	B

Street Name:	Newport Boulevard									Broadway								
Approach:	North Bound			South Bound			East Bound			West Bound		
Movement:	L	- T	- R	L	- T	- R	L	- T	- R	L	- T	- R
Control:	Protected			Protected			Permitted			Permitted		
Rights:	Include			Include			Include			Include		
Min. Green:	0	0	0	0	0	0	0	0	0	0	0	0
Lanes:	1 0	3 1	0	1 0	3 0	1	0 1	0 0	1	1 0	0 1	0
Volume Module:												
Base Vol:	4	2678	8	60	2396	7	6	9	3	38	12	102
Growth Adj:	1.07	1.07	1.07	1.07	1.07	1.07	1.07	1.07	1.07	1.07	1.07	1.07
Initial Bse:	4	2871	9	64	2569	8	6	10	3	41	13	109
Added Vol:	2	318	0	0	129	10	0	0	2	0	0	0
Committed P:	0	14	1	0	12	0	0	0	0	0	0	0
Initial Fut:	6	3203	10	64	2710	18	6	10	5	41	13	109
User Adj:	1.00	1.00	1.00	1.00	1.00	1.00	1.00	1.00	1.00	1.00	1.00	1.00
PHF Adj:	1.00	1.00	1.00	1.00	1.00	1.00	1.00	1.00	1.00	1.00	1.00	1.00
PHF Volume:	6	3203	10	64	2710	18	6	10	5	41	13	109
Reduct Vol:	0	0	0	0	0	0	0	0	0	0	0	0
Reduced Vol:	6	3203	10	64	2710	18	6	10	5	41	13	109
PCE Adj:	1.00	1.00	1.00	1.00	1.00	1.00	1.00	1.00	1.00	1.00	1.00	1.00
MLF Adj:	1.00	1.00	1.00	1.00	1.00	1.00	1.00	1.00	1.00	1.00	1.00	1.00
FinalVolume:	6	3203	10	64	2710	18	6	10	5	41	13	109
Saturation Flow Module:												
Sat/Lane:	1600	1600	1600	1600	1600	1600	1600	1600	1600	1600	1600	1600
Adjustment:	1.00	1.00	1.00	1.00	1.00	1.00	1.00	1.00	1.00	1.00	1.00	1.00
Lanes:	1.00	3.99	0.01	1.00	3.00	1.00	0.40	0.60	1.00	1.00	0.11	0.89
Final Sat.:	1600	6381	19	1600	4800	1600	640	960	1600	1600	168	1432
Capacity Analysis Module:												
Vol/Sat:	0.00	0.50	0.50	0.04	0.56	0.01	0.00	0.01	0.00	0.03	0.08	0.08
Crit Moves:	****				****		****				****	

Newport Banning Ranch
Year 2016 Cumulative Conditions with Project Bluff Road Alternative
AM Peak Hour

Level Of Service Computation Report
ICU 1(Loss as Cycle Length %) Method (Future Volume Alternative)

Intersection #36 Newport Blvd/Harbor Blvd

Cycle (sec):	120	Critical Vol./Cap.(X):	0.789
Loss Time (sec):	0 (Y+R=4.0 sec)	Average Delay (sec/veh):	xxxxxx
Optimal Cycle:	108	Level Of Service:	C

Street Name:	Newport Boulevard						Harbor Boulevard					
Approach:	North Bound			South Bound			East Bound			West Bound		
Movement:	L - T - R			L - T - R			L - T - R			L - T - R		
Control:	Protected			Protected			Protected			Protected		
Rights:	Include			Include			Ovl			Include		
Min. Green:	0	0	0	0	0	0	0	0	0	0	0	0
Lanes:	2 0 4 0 0			0 0 2 1 0			1 0 0 0 2			0 0 0 0 0		
Volume Module:												
Base Vol:	317	2653	0	0	2559	49	26	0	486	0	0	0
Growth Adj:	1.07	1.07	1.07	1.07	1.07	1.07	1.07	1.07	1.07	1.07	1.07	1.07
Initial Bse:	340	2844	0	0	2743	53	28	0	521	0	0	0
Added Vol:	67	320	0	0	130	0	0	0	29	0	0	0
Committed P:	13	17	0	0	14	0	0	0	14	0	0	0
Initial Fut:	420	3181	0	0	2887	53	28	0	564	0	0	0
User Adj:	1.00	1.00	1.00	1.00	1.00	1.00	1.00	1.00	1.00	1.00	1.00	1.00
PHF Adj:	1.00	1.00	1.00	1.00	1.00	1.00	1.00	1.00	1.00	1.00	1.00	1.00
PHF Volume:	420	3181	0	0	2887	53	28	0	564	0	0	0
Reduct Vol:	0	0	0	0	0	0	0	0	0	0	0	0
Reduced Vol:	420	3181	0	0	2887	53	28	0	564	0	0	0
PCE Adj:	1.00	1.00	1.00	1.00	1.00	1.00	1.00	1.00	1.00	1.00	1.00	1.00
MLF Adj:	1.00	1.00	1.00	1.00	1.00	1.00	1.00	1.00	1.00	1.00	1.00	1.00
FinalVolume:	420	3181	0	0	2887	53	28	0	564	0	0	0
OvlAdjVol:									144			
Saturation Flow Module:												
Sat/Lane:	1600	1600	1600	1600	1600	1600	1600	1600	1600	1600	1600	1600
Adjustment:	1.00	1.00	1.00	1.00	1.00	1.00	1.00	1.00	1.00	1.00	1.00	1.00
Lanes:	2.00	4.00	0.00	0.00	2.95	0.05	1.00	0.00	2.00	0.00	0.00	0.00
Final Sat.:	3200	6400	0	0	4714	86	1600	0	3200	0	0	0
Capacity Analysis Module:												
Vol/Sat:	0.13	0.50	0.00	0.00	0.61	0.61	0.02	0.00	0.18	0.00	0.00	0.00
OvlAdjV/S:									0.05			
Crit Moves:	****				****				****			

Newport Banning Ranch
Year 2016 Cumulative Conditions with Project Bluff Road Alternative
AM Peak Hour

Level Of Service Computation Report
ICU 1(Loss as Cycle Length %) Method (Future Volume Alternative)

Intersection #37 Newport Blvd/18th St (Rochester St)

Cycle (sec):	120	Critical Vol./Cap.(X):	0.845
Loss Time (sec):	0 (Y+R=4.0 sec)	Average Delay (sec/veh):	xxxxxx
Optimal Cycle:	147	Level Of Service:	D

Street Name:	Newport Boulevard						18th Street (Rochester Street)					
Approach:	North Bound			South Bound			East Bound			West Bound		
Movement:	L - T - R			L - T - R			L - T - R			L - T - R		
Control:	Protected			Protected			Split Phase			Split Phase		
Rights:	Include			Include			Include			Include		
Min. Green:	0	0	0	0	0	0	0	0	0	0	0	0
Lanes:	1 0 3	1 0		1 0 3	0 1		2 0 1	0 1		1 0 0	1 0	
Volume Module:												
Base Vol:	64	2852	7	85	2743	165	179	81	26	7	68	30
Growth Adj:	1.07	1.07	1.07	1.07	1.07	1.07	1.07	1.07	1.07	1.07	1.07	1.07
Initial Bse:	69	3057	8	91	2940	177	192	87	28	8	73	32
Added Vol:	0	304	0	0	129	30	83	0	0	0	0	0
Committed P:	6	35	0	0	35	0	0	0	15	0	0	0
Initial Fut:	75	3396	8	91	3104	207	275	87	43	8	73	32
User Adj:	1.00	1.00	1.00	1.00	1.00	1.00	1.00	1.00	1.00	1.00	1.00	1.00
PHF Adj:	1.00	1.00	1.00	1.00	1.00	1.00	1.00	1.00	1.00	1.00	1.00	1.00
PHF Volume:	75	3396	8	91	3104	207	275	87	43	8	73	32
Reduct Vol:	0	0	0	0	0	0	0	0	0	0	0	0
Reduced Vol:	75	3396	8	91	3104	207	275	87	43	8	73	32
PCE Adj:	1.00	1.00	1.00	1.00	1.00	1.00	1.00	1.00	1.00	1.00	1.00	1.00
MLF Adj:	1.00	1.00	1.00	1.00	1.00	1.00	1.00	1.00	1.00	1.00	1.00	1.00
FinalVolume:	75	3396	8	91	3104	207	275	87	43	8	73	32
Saturation Flow Module:												
Sat/Lane:	1600	1600	1600	1600	1600	1600	1600	1600	1600	1600	1600	1600
Adjustment:	1.00	1.00	1.00	1.00	1.00	1.00	1.00	1.00	1.00	1.00	1.00	1.00
Lanes:	1.00	3.99	0.01	1.00	3.00	1.00	2.00	1.00	1.00	1.00	0.69	0.31
Final Sat.:	1600	6386	14	1600	4800	1600	3200	1600	1600	1600	1110	490
Capacity Analysis Module:												
Vol/Sat:	0.05	0.53	0.53	0.06	0.65	0.13	0.09	0.05	0.03	0.00	0.07	0.07
Crit Moves:	****				****		****				****	

Newport Banning Ranch
Year 2016 Cumulative Conditions with Project Bluff Road Alternative
AM Peak Hour

Level Of Service Computation Report
ICU 1(Loss as Cycle Length %) Method (Future Volume Alternative)

Intersection #38 Placentia Ave/18th St

Cycle (sec):	100	Critical Vol./Cap.(X):	0.525
Loss Time (sec):	0 (Y+R=4.0 sec)	Average Delay (sec/veh):	xxxxxx
Optimal Cycle:	39	Level Of Service:	A

Street Name:	Placentia Avenue						18th Street					
Approach:	North Bound			South Bound			East Bound			West Bound		
Movement:	L - T - R			L - T - R			L - T - R			L - T - R		
Control:	Protected			Protected			Permitted			Permitted		
Rights:	Include			Include			Include			Include		
Min. Green:	0	0	0	0	0	0	0	0	0	0	0	0
Lanes:	1 0 1	1 0		1 0 1	1 0		1 0 0	1 0		1 0 0	1 0	
Volume Module:												
Base Vol:	25	488	23	38	725	106	46	120	27	41	173	45
Growth Adj:	1.07	1.07	1.07	1.07	1.07	1.07	1.07	1.07	1.07	1.07	1.07	1.07
Initial Bse:	27	523	25	41	777	114	49	129	29	44	185	48
Added Vol:	0	14	0	0	94	2	6	83	0	0	30	0
Committed P:	0	4	0	0	0	0	0	0	0	0	0	0
Initial Fut:	27	541	25	41	871	116	55	212	29	44	215	48
User Adj:	1.00	1.00	1.00	1.00	1.00	1.00	1.00	1.00	1.00	1.00	1.00	1.00
PHF Adj:	1.00	1.00	1.00	1.00	1.00	1.00	1.00	1.00	1.00	1.00	1.00	1.00
PHF Volume:	27	541	25	41	871	116	55	212	29	44	215	48
Reduct Vol:	0	0	0	0	0	0	0	0	0	0	0	0
Reduced Vol:	27	541	25	41	871	116	55	212	29	44	215	48
PCE Adj:	1.00	1.00	1.00	1.00	1.00	1.00	1.00	1.00	1.00	1.00	1.00	1.00
MLF Adj:	1.00	1.00	1.00	1.00	1.00	1.00	1.00	1.00	1.00	1.00	1.00	1.00
FinalVolume:	27	541	25	41	871	116	55	212	29	44	215	48
Saturation Flow Module:												
Sat/Lane:	1600	1600	1600	1600	1600	1600	1600	1600	1600	1600	1600	1600
Adjustment:	1.00	1.00	1.00	1.00	1.00	1.00	1.00	1.00	1.00	1.00	1.00	1.00
Lanes:	1.00	1.91	0.09	1.00	1.77	0.23	1.00	0.88	0.12	1.00	0.82	0.18
Final Sat.:	1600	3061	139	1600	2825	375	1600	1408	192	1600	1307	293
Capacity Analysis Module:												
Vol/Sat:	0.02	0.18	0.18	0.03	0.31	0.31	0.03	0.15	0.15	0.03	0.16	0.16
Crit Moves:	****				****		****				****	

Newport Banning Ranch
Year 2016 Cumulative Conditions with Project Bluff Road Alternative
AM Peak Hour

Level Of Service Computation Report
2000 HCM 4-Way Stop Method (Future Volume Alternative)

Intersection #39 Whittier Ave/17th St

Cycle (sec):	100	Critical Vol./Cap.(X):	0.493
Loss Time (sec):	0 (Y+R=4.0 sec)	Average Delay (sec/veh):	10.3
Optimal Cycle:	0	Level Of Service:	B

Street Name:	Whittier Avenue						17th St					
Approach:	North Bound			South Bound			East Bound			West Bound		
Movement:	L - T - R			L - T - R			L - T - R			L - T - R		
Control:	Stop Sign			Stop Sign			Stop Sign			Stop Sign		
Rights:	Include			Include			Include			Include		
Min. Green:	0	0	0	0	0	0	0	0	0	0	0	0
Lanes:	0 0 0 1 0			0 0 1! 0 0			0 0 1! 0 0			0 0 1! 0 0		
Volume Module:												
Base Vol:	0	35	2	24	23	53	56	2	5	1	0	24
Growth Adj:	1.07	1.07	1.07	1.07	1.07	1.07	1.07	1.07	1.07	1.07	1.07	1.07
Initial Bse:	0	38	2	26	25	57	60	2	5	1	0	26
Added Vol:	0	0	0	0	0	24	69	247	0	0	105	0
Committed P:	0	0	0	0	0	0	0	0	0	0	0	0
Initial Fut:	0	38	2	26	25	81	129	249	5	1	105	26
User Adj:	1.00	1.00	1.00	1.00	1.00	1.00	1.00	1.00	1.00	1.00	1.00	1.00
PHF Adj:	1.00	1.00	1.00	1.00	1.00	1.00	1.00	1.00	1.00	1.00	1.00	1.00
PHF Volume:	0	38	2	26	25	81	129	249	5	1	105	26
Reduct Vol:	0	0	0	0	0	0	0	0	0	0	0	0
Reduced Vol:	0	38	2	26	25	81	129	249	5	1	105	26
PCE Adj:	1.00	1.00	1.00	1.00	1.00	1.00	1.00	1.00	1.00	1.00	1.00	1.00
MLF Adj:	1.00	1.00	1.00	1.00	1.00	1.00	1.00	1.00	1.00	1.00	1.00	1.00
FinalVolume:	0	38	2	26	25	81	129	249	5	1	105	26
Saturation Flow Module:												
Adjustment:	1.00	1.00	1.00	1.00	1.00	1.00	1.00	1.00	1.00	1.00	1.00	1.00
Lanes:	0.00	0.95	0.05	0.20	0.19	0.61	0.34	0.65	0.01	0.01	0.80	0.19
Final Sat.:	0	593	34	136	130	427	262	505	11	6	592	145
Capacity Analysis Module:												
Vol/Sat:	xxxx	0.06	0.06	0.19	0.19	0.19	0.49	0.49	0.49	0.18	0.18	0.18
Crit Moves:		****			****		****			****		
Delay/Veh:	0.0	8.5	8.5	8.8	8.8	8.8	11.7	11.7	11.7	8.6	8.6	8.6
Delay Adj:	1.00	1.00	1.00	1.00	1.00	1.00	1.00	1.00	1.00	1.00	1.00	1.00
AdjDel/Veh:	0.0	8.5	8.5	8.8	8.8	8.8	11.7	11.7	11.7	8.6	8.6	8.6
LOS by Move:	*	A	A	A	A	A	B	B	B	A	A	A
ApproachDel:		8.5			8.8			11.7			8.6	
Delay Adj:		1.00			1.00			1.00			1.00	
ApprAdjDel:		8.5			8.8			11.7			8.6	
LOS by Appr:		A			A			B			A	
AllWayAvgQ:	0.1	0.1	0.1	0.2	0.2	0.2	0.9	0.9	0.9	0.2	0.2	0.2

Newport Banning Ranch
Year 2016 Cumulative Conditions with Project Bluff Road Alternative
AM Peak Hour

Note: Queue reported is the number of cars per lane.
****

Newport Banning Ranch
Year 2016 Cumulative Conditions with Project Bluff Road Alternative
AM Peak Hour

Level Of Service Computation Report
2000 HCM 4-Way Stop Method (Future Volume Alternative)

Intersection #40 Monrovia Ave/17th St

Cycle (sec):	100	Critical Vol./Cap.(X):	0.697
Loss Time (sec):	0 (Y+R=4.0 sec)	Average Delay (sec/veh):	18.8
Optimal Cycle:	0	Level Of Service:	C

Street Name:	Monrovia Avenue						17th Street					
Approach:	North Bound			South Bound			East Bound			West Bound		
Movement:	L -	T -	R	L -	T -	R	L -	T -	R	L -	T -	R
Control:	Stop Sign			Stop Sign			Stop Sign			Stop Sign		
Rights:	Include			Include			Include			Include		
Min. Green:	0	0	0	0	0	0	0	0	0	0	0	0
Lanes:	0 0	1! 0	0	0 0	1! 0	0	0 0	1! 0	0	0 0	1! 0	0
Volume Module:												
Base Vol:	36	88	63	26	86	12	14	75	32	67	135	56
Growth Adj:	1.07	1.07	1.07	1.07	1.07	1.07	1.07	1.07	1.07	1.07	1.07	1.07
Initial Bse:	39	94	68	28	92	13	15	80	34	72	145	60
Added Vol:	0	75	40	-8	46	23	63	184	0	43	82	-21
Committed P:	0	0	0	0	0	0	0	0	0	0	0	0
Initial Fut:	39	169	108	20	138	36	78	264	34	115	227	39
User Adj:	1.00	1.00	1.00	1.00	1.00	1.00	1.00	1.00	1.00	1.00	1.00	1.00
PHF Adj:	1.00	1.00	1.00	1.00	1.00	1.00	1.00	1.00	1.00	1.00	1.00	1.00
PHF Volume:	39	169	108	20	138	36	78	264	34	115	227	39
Reduct Vol:	0	0	0	0	0	0	0	0	0	0	0	0
Reduced Vol:	39	169	108	20	138	36	78	264	34	115	227	39
PCE Adj:	1.00	1.00	1.00	1.00	1.00	1.00	1.00	1.00	1.00	1.00	1.00	1.00
MLF Adj:	1.00	1.00	1.00	1.00	1.00	1.00	1.00	1.00	1.00	1.00	1.00	1.00
FinalVolume:	39	169	108	20	138	36	78	264	34	115	227	39
Saturation Flow Module:												
Adjustment:	1.00	1.00	1.00	1.00	1.00	1.00	1.00	1.00	1.00	1.00	1.00	1.00
Lanes:	0.12	0.54	0.34	0.10	0.72	0.18	0.21	0.70	0.09	0.30	0.60	0.10
Final Sat.:	63	278	177	47	325	84	113	382	50	165	325	56
Capacity Analysis Module:												
Vol/Sat:	0.61	0.61	0.61	0.42	0.42	0.42	0.69	0.69	0.69	0.70	0.70	0.70
Crit Moves:		****				****		****			****	
Delay/Veh:	17.3	17.3	17.3	13.7	13.7	13.7	20.5	20.5	20.5	20.9	20.9	20.9
Delay Adj:	1.00	1.00	1.00	1.00	1.00	1.00	1.00	1.00	1.00	1.00	1.00	1.00
AdjDel/Veh:	17.3	17.3	17.3	13.7	13.7	13.7	20.5	20.5	20.5	20.9	20.9	20.9
LOS by Move:	C	C	C	B	B	B	C	C	C	C	C	C
ApproachDel:		17.3			13.7			20.5			20.9	
Delay Adj:		1.00			1.00			1.00			1.00	
ApprAdjDel:		17.3			13.7			20.5			20.9	
LOS by Appr:		C			B			C			C	
AllWayAvgQ:	1.1	1.1	1.1	0.5	0.5	0.5	1.7	1.7	1.7	1.8	1.8	1.8

Newport Banning Ranch
Year 2016 Cumulative Conditions with Project Bluff Road Alternative
AM Peak Hour

Note: Queue reported is the number of cars per lane.
****

Newport Banning Ranch
Year 2016 Cumulative Conditions with Project Bluff Road Alternative
AM Peak Hour

Level Of Service Computation Report
ICU 1(Loss as Cycle Length %) Method (Future Volume Alternative)

Intersection #41 Placentia Ave/17th St

Cycle (sec):	100	Critical Vol./Cap.(X):	0.549
Loss Time (sec):	0 (Y+R=4.0 sec)	Average Delay (sec/veh):	xxxxxx
Optimal Cycle:	32	Level Of Service:	A

Street Name:	Placentia Avenue						17th St					
Approach:	North Bound			South Bound			East Bound			West Bound		
Movement:	L - T - R			L - T - R			L - T - R			L - T - R		
Control:	Permitted			Permitted			Permitted			Permitted		
Rights:	Include			Include			Include			Include		
Min. Green:	0	0	0	0	0	0	0	0	0	0	0	0
Lanes:	1 0	1 1	0	1 0	1 1	0	1 0	0 1	0	1 0	0 1	0
Volume Module:												
Base Vol:	89	378	59	166	537	77	12	141	31	44	162	80
Growth Adj:	1.07	1.07	1.07	1.07	1.07	1.07	1.07	1.07	1.07	1.07	1.07	1.07
Initial Bse:	95	405	63	178	576	83	13	151	33	47	174	86
Added Vol:	-21	-64	2	0	42	52	78	146	-8	9	73	0
Committed P:	3	5	3	0	2	0	0	0	0	0	0	0
Initial Fut:	77	346	68	178	620	135	91	297	25	56	247	86
User Adj:	1.00	1.00	1.00	1.00	1.00	1.00	1.00	1.00	1.00	1.00	1.00	1.00
PHF Adj:	1.00	1.00	1.00	1.00	1.00	1.00	1.00	1.00	1.00	1.00	1.00	1.00
PHF Volume:	77	346	68	178	620	135	91	297	25	56	247	86
Reduct Vol:	0	0	0	0	0	0	0	0	0	0	0	0
Reduced Vol:	77	346	68	178	620	135	91	297	25	56	247	86
PCE Adj:	1.00	1.00	1.00	1.00	1.00	1.00	1.00	1.00	1.00	1.00	1.00	1.00
MLF Adj:	1.00	1.00	1.00	1.00	1.00	1.00	1.00	1.00	1.00	1.00	1.00	1.00
FinalVolume:	77	346	68	178	620	135	91	297	25	56	247	86
Saturation Flow Module:												
Sat/Lane:	1600	1600	1600	1600	1600	1600	1600	1600	1600	1600	1600	1600
Adjustment:	1.00	1.00	1.00	1.00	1.00	1.00	1.00	1.00	1.00	1.00	1.00	1.00
Lanes:	1.00	1.67	0.33	1.00	1.64	0.36	1.00	0.92	0.08	1.00	0.74	0.26
Final Sat.:	1600	2673	527	1600	2629	571	1600	1475	125	1600	1187	413
Capacity Analysis Module:												
Vol/Sat:	0.05	0.13	0.13	0.11	0.24	0.24	0.06	0.20	0.20	0.04	0.21	0.21
Crit Moves:	****				****		****				****	

Newport Banning Ranch
Year 2016 Cumulative Conditions with Project Bluff Road Alternative
AM Peak Hour

Level Of Service Computation Report
2000 HCM 4-Way Stop Method (Future Volume Alternative)

Intersection #42 Pomona Ave/17th St

Cycle (sec):	100	Critical Vol./Cap.(X):	0.915
Loss Time (sec):	0 (Y+R=4.0 sec)	Average Delay (sec/veh):	27.2
Optimal Cycle:	0	Level Of Service:	D

Street Name:	Pomona Avenue						17th Street					
Approach:	North Bound			South Bound			East Bound			West Bound		
Movement:	L -	T -	R	L -	T -	R	L -	T -	R	L -	T -	R
Control:	Stop Sign			Stop Sign			Stop Sign			Stop Sign		
Rights:	Include			Include			Include			Include		
Min. Green:	0	0	0	0	0	0	0	0	0	0	0	0
Lanes:	0 0	1! 0	0	0 0	1! 0	0	1 0	0 1	0	1 0	1 0	1
Volume Module:												
Base Vol:	6	40	19	101	116	59	12	303	29	60	273	53
Growth Adj:	1.07	1.07	1.07	1.07	1.07	1.07	1.07	1.07	1.07	1.07	1.07	1.07
Initial Bse:	6	43	20	108	124	63	13	325	31	64	293	57
Added Vol:	0	0	0	0	0	0	0	152	0	0	75	6
Committed P:	0	0	0	0	0	0	0	0	0	0	0	0
Initial Fut:	6	43	20	108	124	63	13	477	31	64	368	63
User Adj:	1.00	1.00	1.00	1.00	1.00	1.00	1.00	1.00	1.00	1.00	1.00	1.00
PHF Adj:	1.00	1.00	1.00	1.00	1.00	1.00	1.00	1.00	1.00	1.00	1.00	1.00
PHF Volume:	6	43	20	108	124	63	13	477	31	64	368	63
Reduct Vol:	0	0	0	0	0	0	0	0	0	0	0	0
Reduced Vol:	6	43	20	108	124	63	13	477	31	64	368	63
PCE Adj:	1.00	1.00	1.00	1.00	1.00	1.00	1.00	1.00	1.00	1.00	1.00	1.00
MLF Adj:	1.00	1.00	1.00	1.00	1.00	1.00	1.00	1.00	1.00	1.00	1.00	1.00
FinalVolume:	6	43	20	108	124	63	13	477	31	64	368	63
Saturation Flow Module:												
Adjustment:	1.00	1.00	1.00	1.00	1.00	1.00	1.00	1.00	1.00	1.00	1.00	1.00
Lanes:	0.09	0.62	0.29	0.37	0.42	0.21	1.00	0.94	0.06	1.00	1.00	1.00
Final Sat.:	41	270	128	189	217	110	507	521	34	495	536	592
Capacity Analysis Module:												
Vol/Sat:	0.16	0.16	0.16	0.57	0.57	0.57	0.03	0.92	0.92	0.13	0.69	0.11
Crit Moves:		****			****			****			****	
Delay/Veh:	11.5	11.5	11.5	17.4	17.4	17.4	9.9	43.9	43.9	10.8	21.6	9.2
Delay Adj:	1.00	1.00	1.00	1.00	1.00	1.00	1.00	1.00	1.00	1.00	1.00	1.00
AdjDel/Veh:	11.5	11.5	11.5	17.4	17.4	17.4	9.9	43.9	43.9	10.8	21.6	9.2
LOS by Move:	B	B	B	C	C	C	A	E	E	B	C	A
ApproachDel:		11.5			17.4			43.1			18.6	
Delay Adj:		1.00			1.00			1.00			1.00	
ApprAdjDel:		11.5			17.4			43.1			18.6	
LOS by Appr:		B			C			E			C	
AllWayAvgQ:	0.1	0.1	0.1	1.1	1.1	1.1	0.0	5.4	5.4	0.1	1.8	0.1

Newport Banning Ranch
Year 2016 Cumulative Conditions with Project Bluff Road Alternative
AM Peak Hour

Note: Queue reported is the number of cars per lane.
****

Newport Banning Ranch
Year 2016 Cumulative Conditions with Project Bluff Road Alternative
AM Peak Hour

Level Of Service Computation Report
ICU 1(Loss as Cycle Length %) Method (Future Volume Alternative)

Intersection #43 Superior Ave/17th St

Cycle (sec):	100	Critical Vol./Cap.(X):	0.826
Loss Time (sec):	0 (Y+R=4.0 sec)	Average Delay (sec/veh):	xxxxxx
Optimal Cycle:	131	Level Of Service:	D

Street Name:	Superior Avenue						17th Street					
Approach:	North Bound			South Bound			East Bound			West Bound		
Movement:	L - T - R			L - T - R			L - T - R			L - T - R		
Control:	Prot+Permit			Prot+Permit			Prot+Permit			Prot+Permit		
Rights:	Include			Include			Include			Include		
Min. Green:	0	0	0	0	0	0	0	0	0	0	0	0
Lanes:	1 0 0 1 1			1 0 1 1 0			1 0 1 1 0			1 0 1 1 0		
Volume Module:												
Base Vol:	39	123	703	49	213	39	8	386	35	363	366	48
Growth Adj:	1.07	1.07	1.07	1.07	1.07	1.07	1.07	1.07	1.07	1.07	1.07	1.07
Initial Bse:	42	132	754	53	228	42	9	414	38	389	392	51
Added Vol:	0	5	157	0	11	0	0	152	0	49	75	0
Committed P:	3	9	0	0	17	0	0	0	3	0	0	0
Initial Fut:	45	146	911	53	256	42	9	566	41	438	467	51
User Adj:	1.00	1.00	1.00	1.00	1.00	1.00	1.00	1.00	1.00	1.00	1.00	1.00
PHF Adj:	1.00	1.00	1.00	1.00	1.00	1.00	1.00	1.00	1.00	1.00	1.00	1.00
PHF Volume:	45	146	911	53	256	42	9	566	41	438	467	51
Reduct Vol:	0	0	0	0	0	0	0	0	0	0	0	0
Reduced Vol:	45	146	911	53	256	42	9	566	41	438	467	51
PCE Adj:	1.00	1.00	1.00	1.00	1.00	1.00	1.00	1.00	1.00	1.00	1.00	1.00
MLF Adj:	1.00	1.00	1.00	1.00	1.00	1.00	1.00	1.00	1.00	1.00	1.00	1.00
FinalVolume:	45	146	911	53	256	42	9	566	41	438	467	51
Saturation Flow Module:												
Sat/Lane:	1600	1600	1600	1600	1600	1600	1600	1600	1600	1600	1600	1600
Adjustment:	1.00	1.00	1.00	1.00	1.00	1.00	1.00	1.00	1.00	1.00	1.00	1.00
Lanes:	1.00	0.28	1.72	1.00	1.72	0.28	1.00	1.87	0.13	1.00	1.80	0.20
Final Sat.:	1600	442	2758	1600	2751	449	1600	2986	214	1600	2883	317
Capacity Analysis Module:												
Vol/Sat:	0.03	0.33	0.33	0.03	0.09	0.09	0.01	0.19	0.19	0.27	0.16	0.16
Crit Moves:		****		****				****		****		

Newport Banning Ranch
Year 2016 Cumulative Conditions with Project Bluff Road Alternative
AM Peak Hour

Level Of Service Computation Report
ICU 1(Loss as Cycle Length %) Method (Future Volume Alternative)

Intersection #44 Newport Blvd/17th St

Cycle (sec):	120	Critical Vol./Cap.(X):	0.858
Loss Time (sec):	0 (Y+R=4.0 sec)	Average Delay (sec/veh):	xxxxxx
Optimal Cycle:	160	Level Of Service:	D

Street Name:	Newport Boulevard						17th Street					
Approach:	North Bound			South Bound			East Bound			West Bound		
Movement:	L - T - R			L - T - R			L - T - R			L - T - R		
Control:	Protected			Protected			Protected			Protected		
Rights:	Include			Include			Include			Include		
Min. Green:	0	0	0	0	0	0	0	0	0	0	0	0
Lanes:	1 0 3	1 0		2 0 3	0 1		3 0 1	1 0		2 0 3	0 1	
Volume Module:												
Base Vol:	50	1789	209	559	1808	328	759	396	3	142	400	147
Growth Adj:	1.07	1.07	1.07	1.07	1.07	1.07	1.07	1.07	1.07	1.07	1.07	1.07
Initial Bse:	54	1918	224	599	1938	352	814	425	3	152	429	158
Added Vol:	0	63	21	0	35	94	241	68	0	6	31	0
Committed P:	0	47	0	0	53	0	0	0	0	0	0	0
Initial Fut:	54	2028	245	599	2026	446	1055	493	3	158	460	158
User Adj:	1.00	1.00	1.00	1.00	1.00	1.00	1.00	1.00	1.00	1.00	1.00	1.00
PHF Adj:	1.00	1.00	1.00	1.00	1.00	1.00	1.00	1.00	1.00	1.00	1.00	1.00
PHF Volume:	54	2028	245	599	2026	446	1055	493	3	158	460	158
Reduct Vol:	0	0	0	0	0	0	0	0	0	0	0	0
Reduced Vol:	54	2028	245	599	2026	446	1055	493	3	158	460	158
PCE Adj:	1.00	1.00	1.00	1.00	1.00	1.00	1.00	1.00	1.00	1.00	1.00	1.00
MLF Adj:	1.00	1.00	1.00	1.00	1.00	1.00	1.00	1.00	1.00	1.00	1.00	1.00
FinalVolume:	54	2028	245	599	2026	446	1055	493	3	158	460	158
Saturation Flow Module:												
Sat/Lane:	1600	1600	1600	1600	1600	1600	1600	1600	1600	1600	1600	1600
Adjustment:	1.00	1.00	1.00	1.00	1.00	1.00	1.00	1.00	1.00	1.00	1.00	1.00
Lanes:	1.00	3.57	0.43	2.00	3.00	1.00	3.00	1.99	0.01	2.00	3.00	1.00
Final Sat.:	1600	5710	690	3200	4800	1600	4800	3179	21	3200	4800	1600
Capacity Analysis Module:												
Vol/Sat:	0.03	0.36	0.36	0.19	0.42	0.28	0.22	0.15	0.15	0.05	0.10	0.10
Crit Moves:		****		****			****				****	

Newport Banning Ranch
Year 2016 Cumulative Conditions with Project Bluff Road Alternative
AM Peak Hour

Level Of Service Computation Report
ICU 1(Loss as Cycle Length %) Method (Future Volume Alternative)

Intersection #45 Orange Ave/17th St

Cycle (sec):	100	Critical Vol./Cap.(X):	0.470
Loss Time (sec):	0 (Y+R=4.0 sec)	Average Delay (sec/veh):	xxxxxx
Optimal Cycle:	43	Level Of Service:	A

Street Name:	Orange Avenue						17th Street					
Approach:	North Bound			South Bound			East Bound			West Bound		
Movement:	L - T - R			L - T - R			L - T - R			L - T - R		
Control:	Prot+Permit			Prot+Permit			Prot+Permit			Prot+Permit		
Rights:	Include			Include			Include			Include		
Min. Green:	0	0	0	0	0	0	0	0	0	0	0	0
Lanes:	1 0 1	1 0		1 0 1	0 1		1 0 2	0 1		1 0 2	0 1	
Volume Module:												
Base Vol:	106	188	37	123	141	78	42	766	86	40	692	121
Growth Adj:	1.07	1.07	1.07	1.07	1.07	1.07	1.07	1.07	1.07	1.07	1.07	1.07
Initial Bse:	114	202	40	132	151	84	45	821	92	43	742	130
Added Vol:	0	0	0	0	0	0	0	89	0	0	37	0
Committed P:	0	0	0	0	0	0	0	1	0	1	2	1
Initial Fut:	114	202	40	132	151	84	45	911	92	44	781	131
User Adj:	1.00	1.00	1.00	1.00	1.00	1.00	1.00	1.00	1.00	1.00	1.00	1.00
PHF Adj:	1.00	1.00	1.00	1.00	1.00	1.00	1.00	1.00	1.00	1.00	1.00	1.00
PHF Volume:	114	202	40	132	151	84	45	911	92	44	781	131
Reduct Vol:	0	0	0	0	0	0	0	0	0	0	0	0
Reduced Vol:	114	202	40	132	151	84	45	911	92	44	781	131
PCE Adj:	1.00	1.00	1.00	1.00	1.00	1.00	1.00	1.00	1.00	1.00	1.00	1.00
MLF Adj:	1.00	1.00	1.00	1.00	1.00	1.00	1.00	1.00	1.00	1.00	1.00	1.00
FinalVolume:	114	202	40	132	151	84	45	911	92	44	781	131
Saturation Flow Module:												
Sat/Lane:	1600	1600	1600	1600	1600	1600	1600	1600	1600	1600	1600	1600
Adjustment:	1.00	1.00	1.00	1.00	1.00	1.00	1.00	1.00	1.00	1.00	1.00	1.00
Lanes:	1.00	1.67	0.33	1.00	1.00	1.00	1.00	2.00	1.00	1.00	2.00	1.00
Final Sat.:	1600	2674	526	1600	1600	1600	1600	3200	1600	1600	3200	1600
Capacity Analysis Module:												
Vol/Sat:	0.07	0.08	0.08	0.08	0.09	0.05	0.03	0.28	0.06	0.03	0.24	0.08
Crit Moves:		****		****				****		****		

Newport Banning Ranch
Year 2016 Cumulative Conditions with Project Bluff Road Alternative
AM Peak Hour

Level Of Service Computation Report
ICU 1(Loss as Cycle Length %) Method (Future Volume Alternative)

Intersection #46 Santa Ana Ave/17th St

Cycle (sec):	100	Critical Vol./Cap.(X):	0.452
Loss Time (sec):	0 (Y+R=4.0 sec)	Average Delay (sec/veh):	xxxxxx
Optimal Cycle:	34	Level Of Service:	A

Street Name:	Santa Ana Avenue						17th Street					
Approach:	North Bound			South Bound			East Bound			West Bound		
Movement:	L - T - R			L - T - R			L - T - R			L - T - R		
Control:	Permitted			Permitted			Prot+Permit			Prot+Permit		
Rights:	Include			Include			Include			Include		
Min. Green:	0	0	0	0	0	0	0	0	0	0	0	0
Lanes:	1 0 1	0 1		1 0 1	0 1		1 0 2	0 1		1 0 2	0 1	
Volume Module:												
Base Vol:	89	120	70	74	106	62	34	787	41	40	761	58
Growth Adj:	1.07	1.07	1.07	1.07	1.07	1.07	1.07	1.07	1.07	1.07	1.07	1.07
Initial Bse:	95	129	75	79	114	66	36	844	44	43	816	62
Added Vol:	0	0	0	0	0	0	0	92	0	0	46	0
Committed P:	0	0	1	1	0	0	0	3	0	2	8	2
Initial Fut:	95	129	76	80	114	66	36	939	44	45	870	64
User Adj:	1.00	1.00	1.00	1.00	1.00	1.00	1.00	1.00	1.00	1.00	1.00	1.00
PHF Adj:	1.00	1.00	1.00	1.00	1.00	1.00	1.00	1.00	1.00	1.00	1.00	1.00
PHF Volume:	95	129	76	80	114	66	36	939	44	45	870	64
Reduct Vol:	0	0	0	0	0	0	0	0	0	0	0	0
Reduced Vol:	95	129	76	80	114	66	36	939	44	45	870	64
PCE Adj:	1.00	1.00	1.00	1.00	1.00	1.00	1.00	1.00	1.00	1.00	1.00	1.00
MLF Adj:	1.00	1.00	1.00	1.00	1.00	1.00	1.00	1.00	1.00	1.00	1.00	1.00
FinalVolume:	95	129	76	80	114	66	36	939	44	45	870	64
Saturation Flow Module:												
Sat/Lane:	1600	1600	1600	1600	1600	1600	1600	1600	1600	1600	1600	1600
Adjustment:	1.00	1.00	1.00	1.00	1.00	1.00	1.00	1.00	1.00	1.00	1.00	1.00
Lanes:	1.00	1.00	1.00	1.00	1.00	1.00	1.00	2.00	1.00	1.00	2.00	1.00
Final Sat.:	1600	1600	1600	1600	1600	1600	1600	3200	1600	1600	3200	1600
Capacity Analysis Module:												
Vol/Sat:	0.06	0.08	0.05	0.05	0.07	0.04	0.02	0.29	0.03	0.03	0.27	0.04
Crit Moves:	****				****			****		****		

Newport Banning Ranch
Year 2016 Cumulative Conditions with Project Bluff Road Alternative
AM Peak Hour

Level Of Service Computation Report
ICU 1(Loss as Cycle Length %) Method (Future Volume Alternative)

Intersection #47 Tustin Ave/17th St

Cycle (sec):	100	Critical Vol./Cap.(X):	0.541
Loss Time (sec):	0 (Y+R=4.0 sec)	Average Delay (sec/veh):	xxxxxx
Optimal Cycle:	41	Level Of Service:	A

Street Name:	Tustin Avenue						17th Street					
Approach:	North Bound			South Bound			East Bound			West Bound		
Movement:	L - T - R			L - T - R			L - T - R			L - T - R		
Control:	Permitted			Permitted			Prot+Permit			Prot+Permit		
Rights:	Include			Include			Include			Include		
Min. Green:	0	0	0	0	0	0	0	0	0	0	0	0
Lanes:	1 0 0	1 0		1 0 1	0 1		1 0 1	1 0		1 0 1	1 0	
Volume Module:												
Base Vol:	94	139	80	48	94	39	36	807	91	40	732	34
Growth Adj:	1.07	1.07	1.07	1.07	1.07	1.07	1.07	1.07	1.07	1.07	1.07	1.07
Initial Bse:	101	149	86	51	101	42	39	865	98	43	785	36
Added Vol:	0	0	0	0	0	0	0	92	0	0	46	0
Committed P:	0	0	2	2	0	0	0	7	0	2	14	2
Initial Fut:	101	149	88	53	101	42	39	964	98	45	845	38
User Adj:	1.00	1.00	1.00	1.00	1.00	1.00	1.00	1.00	1.00	1.00	1.00	1.00
PHF Adj:	1.00	1.00	1.00	1.00	1.00	1.00	1.00	1.00	1.00	1.00	1.00	1.00
PHF Volume:	101	149	88	53	101	42	39	964	98	45	845	38
Reduct Vol:	0	0	0	0	0	0	0	0	0	0	0	0
Reduced Vol:	101	149	88	53	101	42	39	964	98	45	845	38
PCE Adj:	1.00	1.00	1.00	1.00	1.00	1.00	1.00	1.00	1.00	1.00	1.00	1.00
MLF Adj:	1.00	1.00	1.00	1.00	1.00	1.00	1.00	1.00	1.00	1.00	1.00	1.00
FinalVolume:	101	149	88	53	101	42	39	964	98	45	845	38
Saturation Flow Module:												
Sat/Lane:	1600	1600	1600	1600	1600	1600	1600	1600	1600	1600	1600	1600
Adjustment:	1.00	1.00	1.00	1.00	1.00	1.00	1.00	1.00	1.00	1.00	1.00	1.00
Lanes:	1.00	0.63	0.37	1.00	1.00	1.00	1.00	1.82	0.18	1.00	1.91	0.09
Final Sat.:	1600	1007	593	1600	1600	1600	1600	2906	294	1600	3061	139
Capacity Analysis Module:												
Vol/Sat:	0.06	0.15	0.15	0.03	0.06	0.03	0.02	0.33	0.33	0.03	0.28	0.28
Crit Moves:		****		****				****		****		

Newport Banning Ranch
Year 2016 Cumulative Conditions with Project Bluff Road Alternative
AM Peak Hour

Level Of Service Computation Report
ICU 1(Loss as Cycle Length %) Method (Future Volume Alternative)

Intersection #48 Irvine Ave/17th St

Cycle (sec):	100	Critical Vol./Cap.(X):	0.581
Loss Time (sec):	0 (Y+R=4.0 sec)	Average Delay (sec/veh):	xxxxxx
Optimal Cycle:	54	Level Of Service:	A

Street Name:	Irvine Avenue						17th Street					
Approach:	North Bound			South Bound			East Bound			West Bound		
Movement:	L - T - R			L - T - R			L - T - R			L - T - R		
Control:	Protected			Protected			Protected			Protected		
Rights:	Include			Include			Include			Include		
Min. Green:	0	0	0	0	0	0	0	0	0	0	0	0
Lanes:	2 0 2	0 1		2 0 2	0 1		2 0 1	1 0		1 0 1	1 0	
Volume Module:												
Base Vol:	274	590	35	203	458	127	209	489	217	33	299	40
Growth Adj:	1.07	1.07	1.07	1.07	1.07	1.07	1.07	1.07	1.07	1.07	1.07	1.07
Initial Bse:	294	632	38	218	491	136	224	524	233	35	321	43
Added Vol:	4	1	11	4	2	0	0	87	4	37	42	1
Committed P:	1	1	0	0	0	6	3	9	1	0	14	0
Initial Fut:	299	634	49	222	493	142	227	620	238	72	377	44
User Adj:	1.00	1.00	1.00	1.00	1.00	1.00	1.00	1.00	1.00	1.00	1.00	1.00
PHF Adj:	1.00	1.00	1.00	1.00	1.00	1.00	1.00	1.00	1.00	1.00	1.00	1.00
PHF Volume:	299	634	49	222	493	142	227	620	238	72	377	44
Reduct Vol:	0	0	0	0	0	0	0	0	0	0	0	0
Reduced Vol:	299	634	49	222	493	142	227	620	238	72	377	44
PCE Adj:	1.00	1.00	1.00	1.00	1.00	1.00	1.00	1.00	1.00	1.00	1.00	1.00
MLF Adj:	1.00	1.00	1.00	1.00	1.00	1.00	1.00	1.00	1.00	1.00	1.00	1.00
FinalVolume:	299	634	49	222	493	142	227	620	238	72	377	44
Saturation Flow Module:												
Sat/Lane:	1600	1600	1600	1600	1600	1600	1600	1600	1600	1600	1600	1600
Adjustment:	1.00	1.00	1.00	1.00	1.00	1.00	1.00	1.00	1.00	1.00	1.00	1.00
Lanes:	2.00	2.00	1.00	2.00	2.00	1.00	2.00	1.45	0.55	1.00	1.79	0.21
Final Sat.:	3200	3200	1600	3200	3200	1600	3200	2314	886	1600	2866	334
Capacity Analysis Module:												
Vol/Sat:	0.09	0.20	0.03	0.07	0.15	0.09	0.07	0.27	0.27	0.05	0.13	0.13
Crit Moves:		****		****				****		****		

Newport Banning Ranch
Year 2016 Cumulative Conditions with Project Bluff Road Alternative
AM Peak Hour

Level Of Service Computation Report
ICU 1(Loss as Cycle Length %) Method (Future Volume Alternative)

Intersection #49 Placentia Ave/16th St

Cycle (sec):	100	Critical Vol./Cap.(X):	0.411
Loss Time (sec):	0 (Y+R=4.0 sec)	Average Delay (sec/veh):	xxxxxx
Optimal Cycle:	24	Level Of Service:	A

Street Name:	Placentia Avenue						16th Street					
Approach:	North Bound			South Bound			East Bound			West Bound		
Movement:	L - T - R			L - T - R			L - T - R			L - T - R		
Control:	Permitted			Permitted			Permitted			Permitted		
Rights:	Include			Include			Include			Include		
Min. Green:	0	0	0	0	0	0	0	0	0	0	0	0
Lanes:	1 0 1	1 0		1 0 1	1 0		1 0 0	1 0		1 0 0	1 0	
Volume Module:												
Base Vol:	76	454	36	70	442	88	26	57	31	17	105	35
Growth Adj:	1.07	1.07	1.07	1.07	1.07	1.07	1.07	1.07	1.07	1.07	1.07	1.07
Initial Bse:	81	487	39	75	474	94	28	61	33	18	113	38
Added Vol:	-21	-120	0	0	-10	54	37	187	-8	0	71	0
Committed P:	3	13	3	0	3	0	0	0	0	0	0	0
Initial Fut:	63	380	42	75	467	148	65	248	25	18	184	38
User Adj:	1.00	1.00	1.00	1.00	1.00	1.00	1.00	1.00	1.00	1.00	1.00	1.00
PHF Adj:	1.00	1.00	1.00	1.00	1.00	1.00	1.00	1.00	1.00	1.00	1.00	1.00
PHF Volume:	63	380	42	75	467	148	65	248	25	18	184	38
Reduct Vol:	0	0	0	0	0	0	0	0	0	0	0	0
Reduced Vol:	63	380	42	75	467	148	65	248	25	18	184	38
PCE Adj:	1.00	1.00	1.00	1.00	1.00	1.00	1.00	1.00	1.00	1.00	1.00	1.00
MLF Adj:	1.00	1.00	1.00	1.00	1.00	1.00	1.00	1.00	1.00	1.00	1.00	1.00
FinalVolume:	63	380	42	75	467	148	65	248	25	18	184	38
Saturation Flow Module:												
Sat/Lane:	1600	1600	1600	1600	1600	1600	1600	1600	1600	1600	1600	1600
Adjustment:	1.00	1.00	1.00	1.00	1.00	1.00	1.00	1.00	1.00	1.00	1.00	1.00
Lanes:	1.00	1.80	0.20	1.00	1.52	0.48	1.00	0.91	0.09	1.00	0.83	0.17
Final Sat.:	1600	2884	316	1600	2428	772	1600	1452	148	1600	1328	272
Capacity Analysis Module:												
Vol/Sat:	0.04	0.13	0.13	0.05	0.19	0.19	0.04	0.17	0.17	0.01	0.14	0.14
Crit Moves:	****				****		****				****	

Newport Banning Ranch
Year 2016 Cumulative Conditions with Project Bluff Road Alternative
AM Peak Hour

Level Of Service Computation Report
ICU 1(Loss as Cycle Length %) Method (Future Volume Alternative)

Intersection #50 Superior Ave/16th St

Cycle (sec):	100	Critical Vol./Cap.(X):	0.588
Loss Time (sec):	0 (Y+R=4.0 sec)	Average Delay (sec/veh):	xxxxxx
Optimal Cycle:	35	Level Of Service:	A

Street Name:	Superior Avenue						16th Street					
Approach:	North Bound			South Bound			East Bound			West Bound		
Movement:	L - T - R			L - T - R			L - T - R			L - T - R		
Control:	Permitted			Permitted			Permitted			Permitted		
Rights:	Include			Include			Include			Include		
Min. Green:	0	0	0	0	0	0	0	0	0	0	0	0
Lanes:	1 0	2 0	1	1 0	1 1	0	1 0	1 0	0	0 1	0 0	1
Volume Module:												
Base Vol:	25	967	66	41	540	130	23	173	0	15	153	15
Growth Adj:	1.07	1.07	1.07	1.07	1.07	1.07	1.07	1.07	1.07	1.07	1.07	1.07
Initial Bse:	27	1037	71	44	579	139	25	185	0	16	164	16
Added Vol:	0	68	0	0	29	41	96	91	0	0	30	0
Committed P:	0	27	0	0	23	0	0	0	0	0	0	0
Initial Fut:	27	1132	71	44	631	180	121	276	0	16	194	16
User Adj:	1.00	1.00	1.00	1.00	1.00	1.00	1.00	1.00	1.00	1.00	1.00	1.00
PHF Adj:	1.00	1.00	1.00	1.00	1.00	1.00	1.00	1.00	1.00	1.00	1.00	1.00
PHF Volume:	27	1132	71	44	631	180	121	276	0	16	194	16
Reduct Vol:	0	0	0	0	0	0	0	0	0	0	0	0
Reduced Vol:	27	1132	71	44	631	180	121	276	0	16	194	16
PCE Adj:	1.00	1.00	1.00	1.00	1.00	1.00	1.00	1.00	1.00	1.00	1.00	1.00
MLF Adj:	1.00	1.00	1.00	1.00	1.00	1.00	1.00	1.00	1.00	1.00	1.00	1.00
FinalVolume:	27	1132	71	44	631	180	121	276	0	16	194	16
Saturation Flow Module:												
Sat/Lane:	1600	1600	1600	1600	1600	1600	1600	1600	1600	1600	1600	1600
Adjustment:	1.00	1.00	1.00	1.00	1.00	1.00	1.00	1.00	1.00	1.00	1.00	1.00
Lanes:	1.00	2.00	1.00	1.00	1.56	0.44	1.00	1.00	0.00	0.08	0.92	1.00
Final Sat.:	1600	3200	1600	1600	2489	711	1600	1600	0	122	1478	1600
Capacity Analysis Module:												
Vol/Sat:	0.02	0.35	0.04	0.03	0.25	0.25	0.08	0.17	0.00	0.01	0.13	0.01
Crit Moves:		****		****			****				****	

Newport Banning Ranch
Year 2016 Cumulative Conditions with Project Bluff Road Alternative
AM Peak Hour

Level Of Service Computation Report
ICU 1(Loss as Cycle Length %) Method (Future Volume Alternative)

Intersection #51 Newport Blvd/16th St

Cycle (sec):	120	Critical Vol./Cap.(X):	0.566
Loss Time (sec):	0 (Y+R=4.0 sec)	Average Delay (sec/veh):	xxxxxx
Optimal Cycle:	43	Level Of Service:	A

Street Name:	Newport Boulevard									16th Street								
Approach:	North Bound						South Bound						East Bound						West Bound					
Movement:	L	-	T	-	R		L	-	T	-	R		L	-	T	-	R		L	-	T	-	R	
Control:	Protected						Protected						Permitted						Permitted					
Rights:		Include						Include						Include						Include				
Min. Green:	0	0		0			0	0		0			0	0		0			0	0		0		
Lanes:	1	0	2	1	0		1	0	3	0	1		0	0	1!	0	0		0	0	1!	0	0	
Volume Module:																								
Base Vol:		8	1539		42			60	1370		49		38		44		13		19		68		77	
Growth Adj:		1.07	1.07		1.07			1.07	1.07		1.07		1.07		1.07		1.07		1.07		1.07		1.07	
Initial Bse:		9	1650		45			64	1469		53		41		47		14		20		73		83	
Added Vol:		0	84		0			0	42		0		0		0		0		0		0		0	
Committed P:		2	47		10			0	53		0		0		0		5		12		0		0	
Initial Fut:		11	1781		55			64	1564		53		41		47		19		32		73		83	
User Adj:		1.00	1.00		1.00			1.00	1.00		1.00		1.00		1.00		1.00		1.00		1.00		1.00	
PHF Adj:		1.00	1.00		1.00			1.00	1.00		1.00		1.00		1.00		1.00		1.00		1.00		1.00	
PHF Volume:		11	1781		55			64	1564		53		41		47		19		32		73		83	
Reduct Vol:		0	0		0			0	0		0		0		0		0		0		0		0	
Reduced Vol:		11	1781		55			64	1564		53		41		47		19		32		73		83	
PCE Adj:		1.00	1.00		1.00			1.00	1.00		1.00		1.00		1.00		1.00		1.00		1.00		1.00	
MLF Adj:		1.00	1.00		1.00			1.00	1.00		1.00		1.00		1.00		1.00		1.00		1.00		1.00	
FinalVolume:		11	1781		55			64	1564		53		41		47		19		32		73		83	
Saturation Flow Module:																								
Sat/Lane:		1600	1600		1600			1600	1600		1600		1600		1600		1600		1600		1600		1600	
Adjustment:		1.00	1.00		1.00			1.00	1.00		1.00		1.00		1.00		1.00		1.00		1.00		1.00	
Lanes:		1.00	2.91		0.09			1.00	3.00		1.00		0.38		0.44		0.18		0.17		0.39		0.44	
Final Sat.:		1600	4656		144			1600	4800		1600		610		706		284		276		621		703	
Capacity Analysis Module:																								
Vol/Sat:		0.01	0.38		0.38			0.04	0.33		0.03		0.03		0.07		0.07		0.02		0.12		0.12	
Crit Moves:			****					****					****								****			

Newport Banning Ranch
Year 2016 Cumulative Conditions with Project Bluff Road Alternative
AM Peak Hour

Level Of Service Computation Report
ICU 1(Loss as Cycle Length %) Method (Future Volume Alternative)

Intersection #52 Bluff Rd/Victoria St

Cycle (sec):	100	Critical Vol./Cap.(X):	0.511
Loss Time (sec):	0 (Y+R=4.0 sec)	Average Delay (sec/veh):	xxxxxx
Optimal Cycle:	47	Level Of Service:	A

Street Name:	Bluff Road						Victoria St					
Approach:	North Bound			South Bound			East Bound			West Bound		
Movement:	L - T - R			L - T - R			L - T - R			L - T - R		
Control:	Protected			Protected			Protected			Protected		
Rights:	Include			Include			Include			Include		
Min. Green:	0	0	0	0	0	0	0	0	0	0	0	0
Lanes:	0 0 0 0 0			0 0 0 0 0			0 0 2 0 0			0 0 2 0 0		
Volume Module:												
Base Vol:	0	0	0	0	0	0	0	1505	0	0	749	0
Growth Adj:	1.00	1.00	1.00	1.00	1.00	1.00	1.00	1.07	1.00	1.00	1.07	1.00
Initial Bse:	0	0	0	0	0	0	0	1613	0	0	803	0
Added Vol:	0	0	0	0	0	0	0	22	0	0	28	0
PasserByVol:	0	0	0	0	0	0	0	0	0	0	0	0
Initial Fut:	0	0	0	0	0	0	0	1635	0	0	831	0
User Adj:	1.00	1.00	1.00	1.00	1.00	1.00	1.00	1.00	1.00	1.00	1.00	1.00
PHF Adj:	1.00	1.00	1.00	1.00	1.00	1.00	1.00	1.00	1.00	1.00	1.00	1.00
PHF Volume:	0	0	0	0	0	0	0	1635	0	0	831	0
Reduct Vol:	0	0	0	0	0	0	0	0	0	0	0	0
Reduced Vol:	0	0	0	0	0	0	0	1635	0	0	831	0
PCE Adj:	1.00	1.00	1.00	1.00	1.00	1.00	1.00	1.00	1.00	1.00	1.00	1.00
MLF Adj:	1.00	1.00	1.00	1.00	1.00	1.00	1.00	1.00	1.00	1.00	1.00	1.00
FinalVolume:	0	0	0	0	0	0	0	1635	0	0	831	0
Saturation Flow Module:												
Sat/Lane:	1600	1600	1600	1600	1600	1600	1600	1600	1600	1600	1600	1600
Adjustment:	1.00	1.00	1.00	1.00	1.00	1.00	1.00	1.00	1.00	1.00	1.00	1.00
Lanes:	0.00	0.00	0.00	0.00	0.00	0.00	0.00	2.00	0.00	0.00	2.00	0.00
Final Sat.:	0	0	0	0	0	0	0	3200	0	0	3200	0
Capacity Analysis Module:												
Vol/Sat:	0.00	0.00	0.00	0.00	0.00	0.00	0.00	0.51	0.00	0.00	0.26	0.00
Crit Moves:								****		****		

Newport Banning Ranch
Year 2016 Cumulative Conditions with Project Bluff Road Alternative
AM Peak Hour

Level Of Service Computation Report
ICU 1(Loss as Cycle Length %) Method (Future Volume Alternative)

Intersection #53 Bluff Rd/19th St

Cycle (sec):	100	Critical Vol./Cap.(X):	0.000
Loss Time (sec):	0 (Y+R=4.0 sec)	Average Delay (sec/veh):	xxxxxx
Optimal Cycle:	0	Level Of Service:	

Street Name:	Bluff Rd						19th Street					
Approach:	North Bound			South Bound			East Bound			West Bound		
Movement:	L - T - R			L - T - R			L - T - R			L - T - R		
Control:	Permitted			Permitted			Permitted			Permitted		
Rights:	Include			Include			Include			Include		
Min. Green:	0	0	0	0	0	0	0	0	0	0	0	0
Lanes:	0 0 0 0 0			0 0 0 0 0			0 0 0 0 0			0 0 0 0 0		
Volume Module:												
Base Vol:	0	0	0	0	0	0	0	0	0	0	0	0
Growth Adj:	0.00	0.00	0.00	0.00	0.00	0.00	0.00	0.00	0.00	0.00	0.00	0.00
Initial Bse:	0	0	0	0	0	0	0	0	0	0	0	0
Added Vol:	0	0	0	0	0	0	0	0	0	0	0	0
PasserByVol:	0	0	0	0	0	0	0	0	0	0	0	0
Initial Fut:	0	0	0	0	0	0	0	0	0	0	0	0
User Adj:	0.00	0.00	0.00	0.00	0.00	0.00	0.00	0.00	0.00	0.00	0.00	0.00
PHF Adj:	0.00	0.00	0.00	0.00	0.00	0.00	0.00	0.00	0.00	0.00	0.00	0.00
PHF Volume:	0	0	0	0	0	0	0	0	0	0	0	0
Reduct Vol:	0	0	0	0	0	0	0	0	0	0	0	0
Reduced Vol:	0	0	0	0	0	0	0	0	0	0	0	0
PCE Adj:	0.00	0.00	0.00	0.00	0.00	0.00	0.00	0.00	0.00	0.00	0.00	0.00
MLF Adj:	0.00	0.00	0.00	0.00	0.00	0.00	0.00	0.00	0.00	0.00	0.00	0.00
FinalVolume:	0	0	0	0	0	0	0	0	0	0	0	0
Saturation Flow Module:												
Sat/Lane:	0	0	0	0	0	0	0	0	0	0	0	0
Adjustment:	1.00	1.00	1.00	1.00	1.00	1.00	1.00	1.00	1.00	1.00	1.00	1.00
Lanes:	0.00	0.00	0.00	0.00	0.00	0.00	0.00	0.00	0.00	0.00	0.00	0.00
Final Sat.:	0	0	0	0	0	0	0	0	0	0	0	0
Capacity Analysis Module:												
Vol/Sat:	0.00	0.00	0.00	0.00	0.00	0.00	0.00	0.00	0.00	0.00	0.00	0.00
Crit Moves:												

Newport Banning Ranch
Year 2016 Cumulative Conditions with Project Bluff Road Alternative
AM Peak Hour

Level Of Service Computation Report
ICU 1(Loss as Cycle Length %) Method (Future Volume Alternative)

Intersection #54 Bluff Rd/17th St

Cycle (sec):	100	Critical Vol./Cap.(X):	0.140
Loss Time (sec):	0 (Y+R=4.0 sec)	Average Delay (sec/veh):	xxxxxx
Optimal Cycle:	17	Level Of Service:	A

Street Name:	Bluff Road						17th Street					
Approach:	North Bound			South Bound			East Bound			West Bound		
Movement:	L - T - R			L - T - R			L - T - R			L - T - R		
Control:	Permitted			Permitted			Permitted			Permitted		
Rights:	Include			Include			Include			Include		
Min. Green:	0	0	0	0	0	0	0	0	0	0	0	0
Lanes:	1 0 1	1 0		1 0 0	1 0		0 0 1	0 0		1 0 1	0 1	
Volume Module:												
Base Vol:	0	0	0	0	0	0	0	0	0	0	0	0
Growth Adj:	1.00	1.00	1.00	1.00	1.00	1.00	1.00	1.00	1.00	1.00	1.00	1.00
Initial Bse:	0	0	0	0	0	0	0	0	0	0	0	0
Added Vol:	0	15	139	0	36	0	0	18	0	67	5	0
PasserByVol:	0	0	0	0	0	0	0	0	0	0	0	0
Initial Fut:	0	15	139	0	36	0	0	18	0	67	5	0
User Adj:	1.00	1.00	1.00	1.00	1.00	1.00	1.00	1.00	1.00	1.00	1.00	1.00
PHF Adj:	1.00	1.00	1.00	1.00	1.00	1.00	1.00	1.00	1.00	1.00	1.00	1.00
PHF Volume:	0	15	139	0	36	0	0	18	0	67	5	0
Reduct Vol:	0	0	0	0	0	0	0	0	0	0	0	0
Reduced Vol:	0	15	139	0	36	0	0	18	0	67	5	0
PCE Adj:	1.00	1.00	1.00	1.00	1.00	1.00	1.00	1.00	1.00	1.00	1.00	1.00
MLF Adj:	1.00	1.00	1.00	1.00	1.00	1.00	1.00	1.00	1.00	1.00	1.00	1.00
FinalVolume:	0	15	139	0	36	0	0	18	0	67	5	0
Saturation Flow Module:												
Sat/Lane:	1600	1600	1600	1600	1600	1600	1600	1600	1600	1600	1600	1600
Adjustment:	1.00	1.00	1.00	1.00	1.00	1.00	1.00	1.00	1.00	1.00	1.00	1.00
Lanes:	1.00	1.00	1.00	1.00	1.00	0.00	0.00	1.00	0.00	1.00	1.00	1.00
Final Sat.:	1600	1600	1600	1600	1600	0	0	1600	0	1600	1600	1600
Capacity Analysis Module:												
Vol/Sat:	0.00	0.01	0.09	0.00	0.02	0.00	0.00	0.01	0.00	0.04	0.00	0.00
Crit Moves:			****	****				****		****		

Newport Banning Ranch
Year 2016 Cumulative Conditions with Project Bluff Road Alternative
AM Peak Hour

Level Of Service Computation Report
2000 HCM Unsignalized Method (Future Volume Alternative)

Intersection #55 Bluff Rd/16th St

Average Delay (sec/veh): 4.0 Worst Case Level Of Service: B[14.6]

Street Name:	Bluff Road								16th Street							
Approach:	North Bound				South Bound				East Bound				West Bound			
Movement:	L	-	T	- R	L	-	T	- R	L	-	T	- R	L	-	T	- R
Control:	Uncontrolled				Uncontrolled				Stop Sign				Stop Sign			
Rights:	Include				Include				Include				Include			
Lanes:	1 0	1	1	0	1 0	1	1	0	0 0	0	1	0	0 0	1!	0	0
Volume Module:																
Base Vol:	0	0	0		0	0	0		0	0	0		0	0	0	
Growth Adj:	1.00	1.00	1.00		1.00	1.00	1.00		1.00	1.00	1.00		1.00	1.00	1.00	
Initial Bse:	0	0	0		0	0	0		0	0	0		0	0	0	
Added Vol:	7	189	67		136	201	0		0	32	23		24	10	37	
PasserByVol:	0	0	0		0	0	0		0	0	0		0	0	0	
Initial Fut:	7	189	67		136	201	0		0	32	23		24	10	37	
User Adj:	1.00	1.00	1.00		1.00	1.00	1.00		1.00	1.00	1.00		1.00	1.00	1.00	
PHF Adj:	1.00	1.00	1.00		1.00	1.00	1.00		1.00	1.00	1.00		1.00	1.00	1.00	
PHF Volume:	7	189	67		136	201	0		0	32	23		24	10	37	
Reduct Vol:	0	0	0		0	0	0		0	0	0		0	0	0	
FinalVolume:	7	189	67		136	201	0		0	32	23		24	10	37	
Critical Gap Module:																
Critical Gp:	4.1	xxxx	xxxxx		4.1	xxxx	xxxxx	xxxxx	6.5	6.9	7.5		6.5	6.9		
FollowUpTim:	2.2	xxxx	xxxxx		2.2	xxxx	xxxxx	xxxxx	4.0	3.3	3.5		4.0	3.3		
Capacity Module:																
Cnflict Vol:	201	xxxx	xxxxx		256	xxxx	xxxxx	xxxx	743	101	625		710	128		
Potent Cap.:	1383	xxxx	xxxxx		1321	xxxx	xxxxx	xxxx	346	942	373		361	905		
Move Cap.:	1383	xxxx	xxxxx		1321	xxxx	xxxxx	xxxx	308	942	308		322	905		
Volume/Cap:	0.01	xxxx	xxxx		0.10	xxxx	xxxx	xxxx	0.10	0.02	0.08		0.03	0.04		
Level Of Service Module:																
2Way95thQ:	0.0	xxxx	xxxxx		0.3	xxxx	xxxxx	xxxx	xxxx	xxxxx	xxxx		xxxx	xxxxx		
Control Del:	7.6	xxxx	xxxxx		8.0	xxxx	xxxxx	xxxxx	xxxx	xxxxx	xxxxx		xxxx	xxxxx		
LOS by Move:	A	*	*		A	*	*	*	*	*	*		*	*		
Movement:	LT	-	LTR	- RT	LT	-	LTR	- RT	LT	-	LTR	- RT	LT	-	LTR	- RT
Shared Cap.:	xxxx	xxxx	xxxxx		xxxx	xxxx	xxxxx		xxxx	xxxx	429		xxxx	474	xxxxx	
SharedQueue:	xxxxx	xxxx	xxxxx		xxxxx	xxxx	xxxxx		xxxxx	xxxx	0.4		xxxxx	0.5	xxxxx	
Shrd ConDel:	xxxxx	xxxx	xxxxx		xxxxx	xxxx	xxxxx		xxxxx	xxxx	14.6		xxxxx	13.9	xxxxx	
Shared LOS:	*	*	*		*	*	*		*	*	B		*	B	*	
ApproachDel:	xxxxxx				xxxxxx				14.6				13.9			
ApproachLOS:	*				*				B				B			

Note: Queue reported is the number of cars per lane.

Newport Banning Ranch
Year 2016 Cumulative Conditions with Project Bluff Road Alternative
AM Peak Hour

Level Of Service Computation Report
ICU 1(Loss as Cycle Length %) Method (Future Volume Alternative)

Intersection #56 Bluff Rd/15th St

Cycle (sec):	100	Critical Vol./Cap.(X):	0.180
Loss Time (sec):	0 (Y+R=4.0 sec)	Average Delay (sec/veh):	xxxxxx
Optimal Cycle:	23	Level Of Service:	A

Street Name:	Bluff Road									15th Street								
Approach:	North Bound						South Bound						East Bound						West Bound					
Movement:	L	-	T	-	R		L	-	T	-	R		L	-	T	-	R		L	-	T	-	R	
Control:	Split Phase						Split Phase						Permitted						Permitted					
Rights:	Include						Include						Include						Include					
Min. Green:	0	0	0				0	0	0				0	0	0				0	0	0			
Lanes:	0	0	0	0	0		1	0	0	0	2		2	0	2	0	0		0	0	2	1	0	
Volume Module:																								
Base Vol:	0	0	0				0	0	0				0	0	0				0	0	0			
Growth Adj:	1.00	1.00	1.00				1.00	1.00	1.00				1.00	1.00	1.00				1.00	1.00	1.00			
Initial Bse:	0	0	0				0	0	0				0	0	0				0	0	0			
Added Vol:	0	0	0				46	0	247				262	236	0				0	88	14			
PasserByVol:	0	0	0				0	0	0				0	0	0				0	0	0			
Initial Fut:	0	0	0				46	0	247				262	236	0				0	88	14			
User Adj:	1.00	1.00	1.00				1.00	1.00	1.00				1.00	1.00	1.00				1.00	1.00	1.00			
PHF Adj:	1.00	1.00	1.00				1.00	1.00	1.00				1.00	1.00	1.00				1.00	1.00	1.00			
PHF Volume:	0	0	0				46	0	247				262	236	0				0	88	14			
Reduct Vol:	0	0	0				0	0	0				0	0	0				0	0	0			
Reduced Vol:	0	0	0				46	0	247				262	236	0				0	88	14			
PCE Adj:	1.00	1.00	1.00				1.00	1.00	1.00				1.00	1.00	1.00				1.00	1.00	1.00			
MLF Adj:	1.00	1.00	1.00				1.00	1.00	1.00				1.00	1.00	1.00				1.00	1.00	1.00			
FinalVolume:	0	0	0				46	0	247				262	236	0				0	88	14			
Saturation Flow Module:																								
Sat/Lane:	1600	1600	1600				1600	1600	1600				1600	1600	1600				1600	1600	1600			
Adjustment:	1.00	1.00	1.00				1.00	1.00	1.00				1.00	1.00	1.00				1.00	1.00	1.00			
Lanes:	0.00	0.00	0.00				1.00	0.00	2.00				2.00	2.00	0.00				0.00	2.59	0.41			
Final Sat.:	0	0	0				1600	0	3200				3200	3200	0				0	4141	659			
Capacity Analysis Module:																								
Vol/Sat:	0.00	0.00	0.00				0.03	0.00	0.08				0.08	0.07	0.00				0.00	0.02	0.02			
Crit Moves:									****				****							****				

Newport Banning Ranch
Year 2016 Cumulative Conditions with Project Bluff Road Alternative
AM Peak Hour

Level Of Service Computation Report
ICU 1(Loss as Cycle Length %) Method (Future Volume Alternative)

Intersection #57 Bluff Rd/W. Coast Hwy

Cycle (sec):	120	Critical Vol./Cap.(X):	0.672
Loss Time (sec):	0 (Y+R=4.0 sec)	Average Delay (sec/veh):	xxxxxx
Optimal Cycle:	69	Level Of Service:	B

Street Name:	Bluff Road						W. Coast Highway					
Approach:	North Bound			South Bound			East Bound			West Bound		
Movement:	L - T - R			L - T - R			L - T - R			L - T - R		
Control:	Split Phase			Split Phase			Protected			Protected		
Rights:	Include			Include			Include			Include		
Min. Green:	0	0	0	0	0	0	0	0	0	0	0	0
Lanes:	0 0 0 0 0			2 0 0 0 2			2 0 3 0 0			0 0 3 0 1		
Volume Module:												
Base Vol:	0	0	0	0	0	0	0	2834	0	0	1183	0
Growth Adj:	1.00	1.00	1.00	1.00	1.00	1.00	1.00	1.07	1.00	1.00	1.07	1.00
Initial Bse:	0	0	0	0	0	0	0	3038	0	0	1268	0
Added Vol:	0	0	0	109	0	269	385	-217	0	0	31	43
PasserByVol:	0	0	0	0	0	0	0	0	0	0	0	0
Initial Fut:	0	0	0	109	0	269	385	2821	0	0	1299	43
User Adj:	1.00	1.00	1.00	1.00	1.00	1.00	1.00	1.00	1.00	1.00	1.00	1.00
PHF Adj:	1.00	1.00	1.00	1.00	1.00	1.00	1.00	1.00	1.00	1.00	1.00	1.00
PHF Volume:	0	0	0	109	0	269	385	2821	0	0	1299	43
Reduct Vol:	0	0	0	0	0	0	0	0	0	0	0	0
Reduced Vol:	0	0	0	109	0	269	385	2821	0	0	1299	43
PCE Adj:	1.00	1.00	1.00	1.00	1.00	1.00	1.00	1.00	1.00	1.00	1.00	1.00
MLF Adj:	1.00	1.00	1.00	1.00	1.00	1.00	1.00	1.00	1.00	1.00	1.00	1.00
FinalVolume:	0	0	0	109	0	269	385	2821	0	0	1299	43
Saturation Flow Module:												
Sat/Lane:	1600	1600	1600	1600	1600	1600	1600	1600	1600	1600	1600	1600
Adjustment:	1.00	1.00	1.00	1.00	1.00	1.00	1.00	1.00	1.00	1.00	1.00	1.00
Lanes:	0.00	0.00	0.00	2.00	0.00	2.00	2.00	3.00	0.00	0.00	3.00	1.00
Final Sat.:	0	0	0	3200	0	3200	3200	4800	0	0	4800	1600
Capacity Analysis Module:												
Vol/Sat:	0.00	0.00	0.00	0.03	0.00	0.08	0.12	0.59	0.00	0.00	0.27	0.03
Crit Moves:						****		****		****		

Newport Banning Ranch
Year 2016 Cumulative Conditions with Project Bluff Road Alternative
AM Peak Hour

Level Of Service Computation Report
2000 HCM 4-Way Stop Method (Future Volume Alternative)

Intersection #58 Monrovia Ave/15th Street

Cycle (sec):	100	Critical Vol./Cap.(X):	0.369
Loss Time (sec):	0 (Y+R=4.0 sec)	Average Delay (sec/veh):	9.4
Optimal Cycle:	0	Level Of Service:	A

Street Name:	Monrovia Ave						15th Street					
Approach:	North Bound			South Bound			East Bound			West Bound		
Movement:	L - T - R			L - T - R			L - T - R			L - T - R		
Control:	Stop Sign			Stop Sign			Stop Sign			Stop Sign		
Rights:	Include			Include			Include			Include		
Min. Green:	0	0	0	0	0	0	0	0	0	0	0	0
Lanes:	0 0 0 1 0			0 0 1! 0 0			0 1 0 0 0			0 0 1! 0 0		
Volume Module: >> Count Date: 4 May 2011 << Existing AM Peak Hour												
Base Vol:	0	6	11	113	3	1	1	0	0	5	2	82
Growth Adj:	1.00	1.00	1.00	1.00	1.00	1.00	1.00	1.00	1.00	1.00	1.00	1.00
Initial Bse:	0	6	11	113	3	1	1	0	0	5	2	82
Added Vol:	0	0	0	13	0	19	53	229	0	0	83	24
PasserByVol:	0	0	0	0	0	0	0	0	0	0	0	0
Initial Fut:	0	6	11	126	3	20	54	229	0	5	85	106
User Adj:	1.00	1.00	1.00	1.00	1.00	1.00	1.00	1.00	1.00	1.00	1.00	1.00
PHF Adj:	1.00	1.00	1.00	1.00	1.00	1.00	1.00	1.00	1.00	1.00	1.00	1.00
PHF Volume:	0	6	11	126	3	20	54	229	0	5	85	106
Reduct Vol:	0	0	0	0	0	0	0	0	0	0	0	0
Reduced Vol:	0	6	11	126	3	20	54	229	0	5	85	106
PCE Adj:	1.00	1.00	1.00	1.00	1.00	1.00	1.00	1.00	1.00	1.00	1.00	1.00
MLF Adj:	1.00	1.00	1.00	1.00	1.00	1.00	1.00	1.00	1.00	1.00	1.00	1.00
FinalVolume:	0	6	11	126	3	20	54	229	0	5	85	106
Saturation Flow Module:												
Adjustment:	1.00	1.00	1.00	1.00	1.00	1.00	1.00	1.00	1.00	1.00	1.00	1.00
Lanes:	0.00	0.35	0.65	0.85	0.02	0.13	0.19	0.81	0.00	0.03	0.43	0.54
Final Sat.:	0	239	438	563	13	89	146	620	0	20	348	434
Capacity Analysis Module:												
Vol/Sat:	xxxx	0.03	0.03	0.22	0.22	0.22	0.37	0.37	xxxx	0.24	0.24	0.24
Crit Moves:		****			****			****			****	
Delay/Veh:	0.0	7.9	7.9	9.4	9.4	9.4	10.1	10.1	0.0	8.6	8.6	8.6
Delay Adj:	1.00	1.00	1.00	1.00	1.00	1.00	1.00	1.00	1.00	1.00	1.00	1.00
AdjDel/Veh:	0.0	7.9	7.9	9.4	9.4	9.4	10.1	10.1	0.0	8.6	8.6	8.6
LOS by Move:	*	A	A	A	A	A	B	B	*	A	A	A
ApproachDel:		7.9			9.4			10.1			8.6	
Delay Adj:		1.00			1.00			1.00			1.00	
ApprAdjDel:		7.9			9.4			10.1			8.6	
LOS by Appr:		A			A			B			A	
AllWayAvgQ:	0.0	0.0	0.0	0.2	0.2	0.2	0.5	0.5	0.5	0.3	0.3	0.3

Newport Banning Ranch
Year 2016 Cumulative Conditions with Project Bluff Road Alternative
AM Peak Hour

Note: Queue reported is the number of cars per lane.
****

Newport Banning Ranch
Year 2016 Cumulative Conditions with Project Bluff Road Alternative
AM Peak Hour

Level Of Service Computation Report
ICU 1(Loss as Cycle Length %) Method (Future Volume Alternative)

Intersection #100 Pomona Ave/16th St

Cycle (sec):	100	Critical Vol./Cap.(X):	0.027
Loss Time (sec):	0 (Y+R=4.0 sec)	Average Delay (sec/veh):	xxxxxx
Optimal Cycle:	15	Level Of Service:	A

Street Name:	Pomona Avenue						16th Street					
Approach:	North Bound			South Bound			East Bound			West Bound		
Movement:	L - T - R			L - T - R			L - T - R			L - T - R		
Control:	Permitted			Permitted			Permitted			Permitted		
Rights:	Include			Include			Include			Include		
Min. Green:	0	0	0	0	0	0	0	0	0	0	0	0
Lanes:	0 0 0 0 0			1 0 0 1 0			1 0 0 1 0			0 0 0 1 0		
Volume Module:												
Base Vol:	0	0	0	37	30	11	0	-200	0	0	-200	0
Growth Adj:	1.07	1.07	1.07	1.07	1.07	1.07	1.07	1.07	1.07	1.07	1.07	1.07
Initial Bse:	0	0	0	40	32	12	0	-214	0	0	-214	0
Added Vol:	0	0	0	0	0	0	0	187	0	0	71	0
PasserByVol:	0	0	0	0	0	0	0	0	0	0	0	0
Initial Fut:	0	0	0	40	32	12	0	-27	0	0	-143	0
User Adj:	1.00	1.00	1.00	1.00	1.00	1.00	1.00	0.00	1.00	1.00	0.00	1.00
PHF Adj:	1.00	1.00	1.00	1.00	1.00	1.00	1.00	0.00	1.00	1.00	0.00	1.00
PHF Volume:	0	0	0	40	32	12	0	0	0	0	0	0
Reduct Vol:	0	0	0	0	0	0	0	0	0	0	0	0
Reduced Vol:	0	0	0	40	32	12	0	0	0	0	0	0
PCE Adj:	1.00	1.00	1.00	1.00	1.00	1.00	1.00	0.00	1.00	1.00	0.00	1.00
MLF Adj:	1.00	1.00	1.00	1.00	1.00	1.00	1.00	0.00	1.00	1.00	0.00	1.00
FinalVolume:	0	0	0	40	32	12	0	0	0	0	0	0
Saturation Flow Module:												
Sat/Lane:	1600	1600	1600	1600	1600	1600	1600	1600	1600	1600	1600	1600
Adjustment:	1.00	1.00	1.00	1.00	1.00	1.00	1.00	1.00	1.00	1.00	1.00	1.00
Lanes:	0.00	0.00	0.00	1.00	0.73	0.27	1.00	1.00	0.00	0.00	1.00	0.00
Final Sat.:	0	0	0	1600	1171	429	1600	1600	0	0	1600	0
Capacity Analysis Module:												
Vol/Sat:	0.00	0.00	0.00	0.02	0.03	0.03	0.00	0.00	0.00	0.00	0.00	0.00
Crit Moves:					****							

Newport Banning Ranch
Year 2016 Cumulative Conditions with Project Bluff Road Alternative
PM Peak Hour

Scenario Report

Scenario:	CEQA 2016 w/ Proj Alt PM ICU
Command:	CEQA 2016 w/ Proj Alt PM ICU
Volume:	Existing+Commited PM
Geometry:	2016 Bluff to 17th ICU
Impact Fee:	Default Impact Fee
Trip Generation:	Cumulative + Proj PM
Trip Distribution:	Cumul+Project
Paths:	Bluff to 17th
Routes:	Default Route
Configuration:	2016 ICU

Newport Banning Ranch
Year 2016 Cumulative Conditions with Project Bluff Road Alternative
PM Peak Hour

Level Of Service Computation Report
2000 HCM 4-Way Stop Method (Future Volume Alternative)

Intersection #1 Monrovia Ave/16th St

Cycle (sec):	100	Critical Vol./Cap.(X):	0.494
Loss Time (sec):	0 (Y+R=4.0 sec)	Average Delay (sec/veh):	11.6
Optimal Cycle:	0	Level Of Service:	B

Street Name:	Monrovia Avenue						16th Street					
Approach:	North Bound			South Bound			East Bound			West Bound		
Movement:	L -	T -	R	L -	T -	R	L -	T -	R	L -	T -	R
Control:	Stop Sign			Stop Sign			Stop Sign			Stop Sign		
Rights:	Include			Include			Include			Include		
Min. Green:	0	0	0	0	0	0	0	0	0	0	0	0
Lanes:	0 0	1! 0	0	0 0	1! 0	0	0 0	1! 0	0	0 0	1! 0	0
Volume Module:												
Base Vol:	8	73	23	29	95	17	37	70	21	18	23	31
Growth Adj:	1.00	1.00	1.00	1.00	1.00	1.00	1.00	1.00	1.00	1.00	1.00	1.00
Initial Bse:	8	73	23	29	95	17	37	70	21	18	23	31
Added Vol:	0	17	22	-17	40	42	16	109	0	53	206	-5
Committed P:	0	0	0	0	0	0	0	0	0	0	0	0
Initial Fut:	8	90	45	12	135	59	53	179	21	71	229	26
User Adj:	1.00	1.00	1.00	1.00	1.00	1.00	1.00	1.00	1.00	1.00	1.00	1.00
PHF Adj:	1.00	1.00	1.00	1.00	1.00	1.00	1.00	1.00	1.00	1.00	1.00	1.00
PHF Volume:	8	90	45	12	135	59	53	179	21	71	229	26
Reduct Vol:	0	0	0	0	0	0	0	0	0	0	0	0
Reduced Vol:	8	90	45	12	135	59	53	179	21	71	229	26
PCE Adj:	1.00	1.00	1.00	1.00	1.00	1.00	1.00	1.00	1.00	1.00	1.00	1.00
MLF Adj:	1.00	1.00	1.00	1.00	1.00	1.00	1.00	1.00	1.00	1.00	1.00	1.00
FinalVolume:	8	90	45	12	135	59	53	179	21	71	229	26
Saturation Flow Module:												
Adjustment:	1.00	1.00	1.00	1.00	1.00	1.00	1.00	1.00	1.00	1.00	1.00	1.00
Lanes:	0.06	0.63	0.31	0.06	0.65	0.29	0.21	0.71	0.08	0.22	0.70	0.08
Final Sat.:	33	368	184	35	398	174	134	454	53	144	464	53
Capacity Analysis Module:												
Vol/Sat:	0.24	0.24	0.24	0.34	0.34	0.34	0.39	0.39	0.39	0.49	0.49	0.49
Crit Moves:	****					****		****			****	
Delay/Veh:	10.1	10.1	10.1	10.9	10.9	10.9	11.4	11.4	11.4	12.7	12.7	12.7
Delay Adj:	1.00	1.00	1.00	1.00	1.00	1.00	1.00	1.00	1.00	1.00	1.00	1.00
AdjDel/Veh:	10.1	10.1	10.1	10.9	10.9	10.9	11.4	11.4	11.4	12.7	12.7	12.7
LOS by Move:	B	B	B	B	B	B	B	B	B	B	B	B
ApproachDel:	10.1			10.9			11.4			12.7		
Delay Adj:	1.00			1.00			1.00			1.00		
ApprAdjDel:	10.1			10.9			11.4			12.7		
LOS by Appr:	B			B			B			B		
AllWayAvgQ:	0.3	0.3	0.3	0.4	0.4	0.4	0.6	0.6	0.6	0.8	0.8	0.8

Newport Banning Ranch
Year 2016 Cumulative Conditions with Project Bluff Road Alternative
PM Peak Hour

Note: Queue reported is the number of cars per lane.
****

Newport Banning Ranch
Year 2016 Cumulative Conditions with Project Bluff Road Alternative
PM Peak Hour

Level Of Service Computation Report
ICU 1(Loss as Cycle Length %) Method (Future Volume Alternative)

Intersection #2 Placentia Ave/15th St

Cycle (sec):	100	Critical Vol./Cap.(X):	0.527
Loss Time (sec):	0 (Y+R=4.0 sec)	Average Delay (sec/veh):	xxxxxx
Optimal Cycle:	48	Level Of Service:	A

Street Name:	Placentia Ave						15th Street					
Approach:	North Bound			South Bound			East Bound			West Bound		
Movement:	L - T - R			L - T - R			L - T - R			L - T - R		
Control:	Prot+Permit			Prot+Permit			Split Phase			Split Phase		
Rights:	Include			Include			Include			Include		
Min. Green:	0	0	0	0	0	0	0	0	0	0	0	0
Lanes:	1 0 1	1 0		1 0 1	1 0		0 0 1!	0 0		0 1 0	0 1	
Volume Module:												
Base Vol:	71	440	17	14	394	30	27	23	132	10	48	84
Growth Adj:	1.00	1.00	1.00	1.00	1.00	1.00	1.00	1.00	1.00	1.00	1.00	1.00
Initial Bse:	71	440	17	14	394	30	27	23	132	10	48	84
Added Vol:	178	-33	0	0	-156	32	15	0	113	0	70	0
Committed P:	0	32	0	0	12	0	0	0	0	0	0	0
Initial Fut:	249	439	17	14	250	62	42	23	245	10	118	84
User Adj:	1.00	1.00	1.00	1.00	1.00	1.00	1.00	1.00	1.00	1.00	1.00	1.00
PHF Adj:	1.00	1.00	1.00	1.00	1.00	1.00	1.00	1.00	1.00	1.00	1.00	1.00
PHF Volume:	249	439	17	14	250	62	42	23	245	10	118	84
Reduct Vol:	0	0	0	0	0	0	0	0	0	0	0	0
Reduced Vol:	249	439	17	14	250	62	42	23	245	10	118	84
PCE Adj:	1.00	1.00	1.00	1.00	1.00	1.00	1.00	1.00	1.00	1.00	1.00	1.00
MLF Adj:	1.00	1.00	1.00	1.00	1.00	1.00	1.00	1.00	1.00	1.00	1.00	1.00
FinalVolume:	249	439	17	14	250	62	42	23	245	10	118	84
Saturation Flow Module:												
Sat/Lane:	1600	1600	1600	1600	1600	1600	1600	1600	1600	1600	1600	1600
Adjustment:	1.00	1.00	1.00	1.00	1.00	1.00	1.00	1.00	1.00	1.00	1.00	1.00
Lanes:	1.00	1.93	0.07	1.00	1.60	0.40	0.14	0.07	0.79	0.08	0.92	1.00
Final Sat.:	1600	3081	119	1600	2564	636	217	119	1265	125	1475	1600
Capacity Analysis Module:												
Vol/Sat:	0.16	0.14	0.14	0.01	0.10	0.10	0.19	0.19	0.19	0.08	0.08	0.05
Crit Moves:	****				****		****				****	

Newport Banning Ranch
Year 2016 Cumulative Conditions with Project Bluff Road Alternative
PM Peak Hour

Level Of Service Computation Report
2000 HCM Unsignalized Method (Future Volume Alternative)

Intersection #3 Superior Ave/15th St

Average Delay (sec/veh): 1.2 Worst Case Level Of Service: D[33.1]

Street Name:	Superior Avenue						15th Street					
Approach:	North Bound			South Bound			East Bound			West Bound		
Movement:	L - T - R			L - T - R			L - T - R			L - T - R		
Control:	Uncontrolled			Uncontrolled			Stop Sign			Stop Sign		
Rights:	Include			Include			Include			Include		
Lanes:	1 0 2 0 0			0 0 1 1 0			1 0 0 0 1			0 0 0 0 0		
Volume Module:												
Base Vol:	35	593	0	0	786	92	35	0	24	0	0	0
Growth Adj:	1.00	1.00	1.00	1.00	1.00	1.00	1.00	1.00	1.00	1.00	1.00	1.00
Initial Bse:	35	593	0	0	786	92	35	0	24	0	0	0
Added Vol:	0	78	0	0	28	70	0	0	0	0	0	0
Committed P:	0	40	0	0	124	0	0	0	0	0	0	0
Initial Fut:	35	711	0	0	938	162	35	0	24	0	0	0
User Adj:	1.00	1.00	1.00	1.00	1.00	1.00	1.00	1.00	1.00	1.00	1.00	1.00
PHF Adj:	1.00	1.00	1.00	1.00	1.00	1.00	1.00	1.00	1.00	1.00	1.00	1.00
PHF Volume:	35	711	0	0	938	162	35	0	24	0	0	0
Reduct Vol:	0	0	0	0	0	0	0	0	0	0	0	0
FinalVolume:	35	711	0	0	938	162	35	0	24	0	0	0
Critical Gap Module:												
Critical Gp:	4.1	xxxx	xxxxx	xxxxx	xxxx	xxxxx	6.8	xxxx	6.9	xxxxx	xxxx	xxxxx
FollowUpTim:	2.2	xxxx	xxxxx	xxxxx	xxxx	xxxxx	3.5	xxxx	3.3	xxxxx	xxxx	xxxxx
Capacity Module:												
Cnflict Vol:	1100	xxxx	xxxxx	xxxx	xxxx	xxxxx	1445	xxxx	550	xxxx	xxxx	xxxxx
Potent Cap.:	642	xxxx	xxxxx	xxxx	xxxx	xxxxx	125	xxxx	484	xxxx	xxxx	xxxxx
Move Cap.:	642	xxxx	xxxxx	xxxx	xxxx	xxxxx	120	xxxx	484	xxxx	xxxx	xxxxx
Volume/Cap:	0.05	xxxx	xxxx	xxxx	xxxx	xxxx	0.29	xxxx	0.05	xxxx	xxxx	xxxx
Level Of Service Module:												
2Way95thQ:	0.2	xxxx	xxxxx	xxxx	xxxx	xxxxx	1.1	xxxx	0.2	xxxx	xxxx	xxxxx
Control Del:	10.9	xxxx	xxxxx	xxxxx	xxxx	xxxxx	47.0	xxxx	12.8	xxxxx	xxxx	xxxxx
LOS by Move:	B	*	*	*	*	*	E	*	B	*	*	*
Movement:	LT - LTR - RT			LT - LTR - RT			LT - LTR - RT			LT - LTR - RT		
Shared Cap.:	xxxx	xxxx	xxxxx	xxxx	xxxx	xxxxx	xxxx	xxxx	xxxxx	xxxx	xxxx	xxxxx
SharedQueue:	xxxxx	xxxx	xxxxx	xxxxx	xxxx	xxxxx	xxxxx	xxxx	xxxxx	xxxxx	xxxx	xxxxx
Shrd ConDel:	xxxxx	xxxx	xxxxx	xxxxx	xxxx	xxxxx	xxxxx	xxxx	xxxxx	xxxxx	xxxx	xxxxx
Shared LOS:	*	*	*	*	*	*	*	*	*	*	*	*
ApproachDel:	xxxxxx			xxxxxx			33.1			xxxxxx		
ApproachLOS:	*			*			D			*		

Note: Queue reported is the number of cars per lane.

Newport Banning Ranch
Year 2016 Cumulative Conditions with Project Bluff Road Alternative
PM Peak Hour

Level Of Service Computation Report
ICU 1(Loss as Cycle Length %) Method (Future Volume Alternative)

Intersection #4 Superior Ave/Placentia Ave

Cycle (sec):	100	Critical Vol./Cap.(X):	0.597
Loss Time (sec):	0 (Y+R=4.0 sec)	Average Delay (sec/veh):	xxxxxx
Optimal Cycle:	46	Level Of Service:	A

Street Name:	Superior Avenue						Placentia Avenue					
Approach:	North Bound			South Bound			East Bound			West Bound		
Movement:	L - T - R			L - T - R			L - T - R			L - T - R		
Control:	Protected			Protected			Permitted			Permitted		
Rights:	Include			Include			Include			Include		
Min. Green:	0	0	0	0	0	0	0	0	0	0	0	0
Lanes:	1 0 1	1 0		1 0 1	1 0		1 0 1	0 1		0 1 0	1 0	
Volume Module:												
Base Vol:	224	419	22	57	664	11	11	166	316	41	287	86
Growth Adj:	1.00	1.00	1.00	1.00	1.00	1.00	1.00	1.00	1.00	1.00	1.00	1.00
Initial Bse:	224	419	22	57	664	11	11	166	316	41	287	86
Added Vol:	-10	-40	0	0	-128	155	118	0	-162	0	0	0
Committed P:	0	40	0	55	69	0	0	2	0	6	32	0
Initial Fut:	214	419	22	112	605	166	129	168	154	47	319	86
User Adj:	1.00	1.00	1.00	1.00	1.00	1.00	1.00	1.00	1.00	1.00	1.00	1.00
PHF Adj:	1.00	1.00	1.00	1.00	1.00	1.00	1.00	1.00	1.00	1.00	1.00	1.00
PHF Volume:	214	419	22	112	605	166	129	168	154	47	319	86
Reduct Vol:	0	0	0	0	0	0	0	0	0	0	0	0
Reduced Vol:	214	419	22	112	605	166	129	168	154	47	319	86
PCE Adj:	1.00	1.00	1.00	1.00	1.00	1.00	1.00	1.00	1.00	1.00	1.00	1.00
MLF Adj:	1.00	1.00	1.00	1.00	1.00	1.00	1.00	1.00	1.00	1.00	1.00	1.00
FinalVolume:	214	419	22	112	605	166	129	168	154	47	319	86
Saturation Flow Module:												
Sat/Lane:	1600	1600	1600	1600	1600	1600	1600	1600	1600	1600	1600	1600
Adjustment:	1.00	1.00	1.00	1.00	1.00	1.00	1.00	1.00	1.00	1.00	1.00	1.00
Lanes:	1.00	1.90	0.10	1.00	1.57	0.43	1.00	1.00	1.00	0.21	1.41	0.38
Final Sat.:	1600	3040	160	1600	2511	689	1600	1600	1600	333	2258	609
Capacity Analysis Module:												
Vol/Sat:	0.13	0.14	0.14	0.07	0.24	0.24	0.08	0.11	0.10	0.03	0.14	0.14
Crit Moves:	****				****		****				****	

Newport Banning Ranch
Year 2016 Cumulative Conditions with Project Bluff Road Alternative
PM Peak Hour

Level Of Service Computation Report
ICU 1(Loss as Cycle Length %) Method (Future Volume Alternative)

Intersection #5 Hospital Rd/Newport Blvd

Cycle (sec):	120	Critical Vol./Cap.(X):	0.647
Loss Time (sec):	0 (Y+R=4.0 sec)	Average Delay (sec/veh):	xxxxxx
Optimal Cycle:	65	Level Of Service:	B

Street Name:	Newport Boulevard						Hospital Road					
Approach:	North Bound			South Bound			East Bound			West Bound		
Movement:	L - T - R			L - T - R			L - T - R			L - T - R		
Control:	Protected			Protected			Protected			Protected		
Rights:	Include			Include			Include			Include		
Min. Green:	0	0	0	0	0	0	0	0	0	0	0	0
Lanes:	1 0 3 0 1			1 0 3 0 1			2 0 1 0 1			1 0 1 1 0		
Volume Module:												
Base Vol:	117	1215	55	48	1513	205	293	135	187	121	178	38
Growth Adj:	1.00	1.00	1.00	1.00	1.00	1.00	1.00	1.00	1.00	1.00	1.00	1.00
Initial Bse:	117	1215	55	48	1513	205	293	135	187	121	178	38
Added Vol:	5	18	12	5	15	0	0	1	2	7	2	14
Committed P:	26	69	0	0	62	6	19	0	41	0	0	0
Initial Fut:	148	1302	67	53	1590	211	312	136	230	128	180	52
User Adj:	1.00	1.00	1.00	1.00	1.00	1.00	1.00	1.00	1.00	1.00	1.00	1.00
PHF Adj:	1.00	1.00	1.00	1.00	1.00	1.00	1.00	1.00	1.00	1.00	1.00	1.00
PHF Volume:	148	1302	67	53	1590	211	312	136	230	128	180	52
Reduct Vol:	0	0	0	0	0	0	0	0	0	0	0	0
Reduced Vol:	148	1302	67	53	1590	211	312	136	230	128	180	52
PCE Adj:	1.00	1.00	1.00	1.00	1.00	1.00	1.00	1.00	1.00	1.00	1.00	1.00
MLF Adj:	1.00	1.00	1.00	1.00	1.00	1.00	1.00	1.00	1.00	1.00	1.00	1.00
FinalVolume:	148	1302	67	53	1590	211	312	136	230	128	180	52
Saturation Flow Module:												
Sat/Lane:	1600	1600	1600	1600	1600	1600	1600	1600	1600	1600	1600	1600
Adjustment:	1.00	1.00	1.00	1.00	1.00	1.00	1.00	1.00	1.00	1.00	1.00	1.00
Lanes:	1.00	3.00	1.00	1.00	3.00	1.00	2.00	1.00	1.00	1.00	1.55	0.45
Final Sat.:	1600	4800	1600	1600	4800	1600	3200	1600	1600	1600	2483	717
Capacity Analysis Module:												
Vol/Sat:	0.09	0.27	0.04	0.03	0.33	0.13	0.10	0.09	0.14	0.08	0.07	0.07
Crit Moves:	****				****				****	****		

Newport Banning Ranch
Year 2016 Cumulative Conditions with Project Bluff Road Alternative
PM Peak Hour

Level Of Service Computation Report
ICU 1(Loss as Cycle Length %) Method (Future Volume Alternative)

Intersection #6 Orange St/W. Coast Hwy

Cycle (sec):	120	Critical Vol./Cap.(X):	0.784
Loss Time (sec):	0 (Y+R=4.0 sec)	Average Delay (sec/veh):	xxxxxx
Optimal Cycle:	86	Level Of Service:	C

Street Name:	Orange Street						W. Coast Highway					
Approach:	North Bound			South Bound			East Bound			West Bound		
Movement:	L - T - R			L - T - R			L - T - R			L - T - R		
Control:	Permitted			Permitted			Protected			Protected		
Rights:	Include			Include			Include			Include		
Min. Green:	0	0	0	0	0	0	0	0	0	0	0	0
Lanes:	0 1	0 0	1	0 1	0 0	1	1 0	2 1	0	1 0	3 0	1
Volume Module:												
Base Vol:	37	8	29	32	2	18	44	1170	19	53	2788	26
Growth Adj:	1.00	1.00	1.00	1.00	1.00	1.00	1.07	1.07	1.07	1.07	1.07	1.07
Initial Bse:	37	8	29	32	2	18	47	1254	20	57	2989	28
Added Vol:	0	0	0	0	0	6	6	387	0	0	289	0
Committed P:	0	0	0	0	0	0	0	56	0	0	95	0
Initial Fut:	37	8	29	32	2	24	53	1697	20	57	3373	28
User Adj:	1.00	1.00	1.00	1.00	1.00	1.00	1.00	1.00	1.00	1.00	1.00	1.00
PHF Adj:	1.00	1.00	1.00	1.00	1.00	1.00	1.00	1.00	1.00	1.00	1.00	1.00
PHF Volume:	37	8	29	32	2	24	53	1697	20	57	3373	28
Reduct Vol:	0	0	0	0	0	0	0	0	0	0	0	0
Reduced Vol:	37	8	29	32	2	24	53	1697	20	57	3373	28
PCE Adj:	1.00	1.00	1.00	1.00	1.00	1.00	1.00	1.00	1.00	1.00	1.00	1.00
MLF Adj:	1.00	1.00	1.00	1.00	1.00	1.00	1.00	1.00	1.00	1.00	1.00	1.00
FinalVolume:	37	8	29	32	2	24	53	1697	20	57	3373	28
Saturation Flow Module:												
Sat/Lane:	1600	1600	1600	1600	1600	1600	1600	1600	1600	1600	1600	1600
Adjustment:	1.00	1.00	1.00	1.00	1.00	1.00	1.00	1.00	1.00	1.00	1.00	1.00
Lanes:	0.82	0.18	1.00	0.94	0.06	1.00	1.00	2.96	0.04	1.00	3.00	1.00
Final Sat.:	1316	284	1600	1506	94	1600	1600	4743	57	1600	4800	1600
Capacity Analysis Module:												
Vol/Sat:	0.02	0.03	0.02	0.02	0.02	0.02	0.03	0.36	0.36	0.04	0.70	0.02
Crit Moves:		****		****			****				****	

Newport Banning Ranch
Year 2016 Cumulative Conditions with Project Bluff Road Alternative
PM Peak Hour

Level Of Service Computation Report
ICU 1(Loss as Cycle Length %) Method (Future Volume Alternative)

Intersection #7 Prospect St/W. Coast Hwy

Cycle (sec):	120	Critical Vol./Cap.(X):	0.761
Loss Time (sec):	0 (Y+R=4.0 sec)	Average Delay (sec/veh):	xxxxxx
Optimal Cycle:	78	Level Of Service:	C

Street Name:	Prospect Street						W. Coast Highway					
Approach:	North Bound			South Bound			East Bound			West Bound		
Movement:	L - T - R			L - T - R			L - T - R			L - T - R		
Control:	Permitted			Permitted			Protected			Protected		
Rights:	Include			Include			Include			Include		
Min. Green:	0	0	0	0	0	0	0	0	0	0	0	0
Lanes:	0 1	0 0	1	0 0	1!	0 0	1 0	2 1	0	1 0	2 1	0
Volume Module:												
Base Vol:	21	0	28	88	1	8	16	1279	10	23	2645	132
Growth Adj:	1.00	1.00	1.00	1.00	1.00	1.00	1.07	1.07	1.07	1.07	1.07	0.00
Initial Bse:	21	0	28	88	1	8	17	1371	11	25	2835	0
Added Vol:	0	0	0	7	0	3	3	384	0	0	286	6
Committed P:	0	0	0	0	0	0	0	56	0	0	95	0
Initial Fut:	21	0	28	95	1	11	20	1811	11	25	3216	6
User Adj:	1.00	1.00	1.00	1.00	1.00	1.00	1.00	1.00	1.00	1.00	1.00	1.00
PHF Adj:	1.00	1.00	1.00	1.00	1.00	1.00	1.00	1.00	1.00	1.00	1.00	1.00
PHF Volume:	21	0	28	95	1	11	20	1811	11	25	3216	6
Reduct Vol:	0	0	0	0	0	0	0	0	0	0	0	0
Reduced Vol:	21	0	28	95	1	11	20	1811	11	25	3216	6
PCE Adj:	1.00	1.00	1.00	1.00	1.00	1.00	1.00	1.00	1.00	1.00	1.00	1.00
MLF Adj:	1.00	1.00	1.00	1.00	1.00	1.00	1.00	1.00	1.00	1.00	1.00	1.00
FinalVolume:	21	0	28	95	1	11	20	1811	11	25	3216	6
Saturation Flow Module:												
Sat/Lane:	1600	1600	1600	1600	1600	1600	1600	1600	1600	1600	1600	1600
Adjustment:	1.00	1.00	1.00	1.00	1.00	1.00	1.00	1.00	1.00	1.00	1.00	1.00
Lanes:	1.00	0.00	1.00	0.89	0.01	0.10	1.00	2.98	0.02	1.00	2.99	0.01
Final Sat.:	1600	0	1600	1421	15	164	1600	4772	28	1600	4791	9
Capacity Analysis Module:												
Vol/Sat:	0.01	0.00	0.02	0.06	0.07	0.07	0.01	0.38	0.38	0.02	0.67	0.67
Crit Moves:			****	****			****				****	

Newport Banning Ranch
Year 2016 Cumulative Conditions with Project Bluff Road Alternative
PM Peak Hour

Level Of Service Computation Report
ICU 1(Loss as Cycle Length %) Method (Future Volume Alternative)

Intersection #8 W. Coast Hwy/Superior Ave

Cycle (sec):	120	Critical Vol./Cap.(X):	0.694
Loss Time (sec):	0 (Y+R=4.0 sec)	Average Delay (sec/veh):	xxxxxx
Optimal Cycle:	75	Level Of Service:	B

Street Name:	Superior Avenue						W. Coast Highway					
Approach:	North Bound			South Bound			East Bound			West Bound		
Movement:	L - T - R			L - T - R			L - T - R			L - T - R		
Control:	Split Phase			Split Phase			Protected			Protected		
Rights:	Include			Ovl			Include			Include		
Min. Green:	0	0	0	0	0	0	0	0	0	0	0	0
Lanes:	1 1 0	1 0		1 1 1	0 2		2 0 3	0 1		1 0 3	1 0	
Volume Module:												
Base Vol:	254	208	78	228	243	710	258	986	243	226	1854	162
Growth Adj:	1.00	1.00	1.00	1.00	1.00	1.00	1.07	1.07	1.07	1.07	1.07	1.07
Initial Bse:	254	208	78	228	243	710	277	1057	260	242	1987	174
Added Vol:	72	0	0	13	0	-305	-88	220	52	0	247	32
Committed P:	0	8	1	0	14	55	32	36	3	0	67	0
Initial Fut:	326	216	79	241	257	460	221	1313	315	242	2301	206
User Adj:	1.00	1.00	1.00	1.00	1.00	1.00	1.00	1.00	1.00	1.00	1.00	1.00
PHF Adj:	1.00	1.00	1.00	1.00	1.00	1.00	1.00	1.00	1.00	1.00	1.00	1.00
PHF Volume:	326	216	79	241	257	460	221	1313	315	242	2301	206
Reduct Vol:	0	0	0	0	0	0	0	0	0	0	0	0
Reduced Vol:	326	216	79	241	257	460	221	1313	315	242	2301	206
PCE Adj:	1.00	1.00	1.00	1.00	1.00	1.00	1.00	1.00	1.00	1.00	1.00	1.00
MLF Adj:	1.00	1.00	1.00	1.00	1.00	1.00	1.00	1.00	1.00	1.00	1.00	1.00
FinalVolume:	326	216	79	241	257	460	221	1313	315	242	2301	206
OvlAdjVol:						239						
Saturation Flow Module:												
Sat/Lane:	1600	1600	1600	1600	1600	1600	1600	1600	1600	1600	1600	1600
Adjustment:	1.00	1.00	1.00	1.00	1.00	1.00	1.00	1.00	1.00	1.00	1.00	1.00
Lanes:	1.58	1.04	0.38	1.45	1.55	2.00	2.00	3.00	1.00	1.00	3.67	0.33
Final Sat.:	2516	1671	612	2323	2477	3200	3200	4800	1600	1600	5875	525
Capacity Analysis Module:												
Vol/Sat:	0.13	0.13	0.13	0.10	0.10	0.14	0.07	0.27	0.20	0.15	0.39	0.39
OvlAdjV/S:						0.07						
Crit Moves:	****				****		****				****	

Newport Banning Ranch
Year 2016 Cumulative Conditions with Project Bluff Road Alternative
PM Peak Hour

Level Of Service Computation Report
ICU 1(Loss as Cycle Length %) Method (Future Volume Alternative)

Intersection #9 Newport Blvd/W. Coast Hwy

Cycle (sec):	120	Critical Vol./Cap.(X):	0.785
Loss Time (sec):	0 (Y+R=4.0 sec)	Average Delay (sec/veh):	xxxxxx
Optimal Cycle:	106	Level Of Service:	C

Street Name:	Newport Boulevard						W. Coast Highway					
Approach:	North Bound			South Bound			East Bound			West Bound		
Movement:	L - T - R			L - T - R			L - T - R			L - T - R		
Control:	Protected			Protected			Protected			Protected		
Rights:	Include			Include			Ignore			Ignore		
Min. Green:	0	0	0	0	0	0	0	0	0	0	0	0
Lanes:	0 0 0 0 0			2 0 0 0 1			0 0 2 0 1			0 0 3 0 1		
Volume Module:												
Base Vol:	0	0	0	586	0	393	0	1261	159	0	1823	487
Growth Adj:	1.00	1.00	1.00	1.00	1.00	1.00	1.00	1.07	1.07	1.00	1.07	1.07
Initial Bse:	0	0	0	586	0	393	0	1352	170	0	1954	522
Added Vol:	0	0	0	21	0	13	0	233	0	0	266	13
Committed P:	0	0	0	44	0	19	0	76	7	0	26	0
Initial Fut:	0	0	0	651	0	425	0	1661	177	0	2246	535
User Adj:	1.00	1.00	1.00	1.00	1.00	1.00	1.00	1.00	0.00	1.00	1.00	0.00
PHF Adj:	1.00	1.00	1.00	1.00	1.00	1.00	1.00	1.00	0.00	1.00	1.00	0.00
PHF Volume:	0	0	0	651	0	425	0	1661	0	0	2246	0
Reduct Vol:	0	0	0	0	0	0	0	0	0	0	0	0
Reduced Vol:	0	0	0	651	0	425	0	1661	0	0	2246	0
PCE Adj:	1.00	1.00	1.00	1.00	1.00	1.00	1.00	1.00	0.00	1.00	1.00	0.00
MLF Adj:	1.00	1.00	1.00	1.00	1.00	1.00	1.00	1.00	0.00	1.00	1.00	0.00
FinalVolume:	0	0	0	651	0	425	0	1661	0	0	2246	0
Saturation Flow Module:												
Sat/Lane:	1600	1600	1600	1600	1600	1600	1600	1600	1600	1600	1600	1600
Adjustment:	1.00	1.00	1.00	1.00	1.00	1.00	1.00	1.00	1.00	1.00	1.00	1.00
Lanes:	0.00	0.00	0.00	2.00	0.00	1.00	0.00	2.00	1.00	0.00	3.00	1.00
Final Sat.:	0	0	0	3200	0	1600	0	3200	1600	0	4800	1600
Capacity Analysis Module:												
Vol/Sat:	0.00	0.00	0.00	0.20	0.00	0.27	0.00	0.52	0.00	0.00	0.47	0.00
Crit Moves:						****		****		****		

Newport Banning Ranch
Year 2016 Cumulative Conditions with Project Bluff Road Alternative
PM Peak Hour

Level Of Service Computation Report
ICU 1(Loss as Cycle Length %) Method (Future Volume Alternative)

Intersection #10 Riverside Ave/W. Coast Hwy

Cycle (sec):	120	Critical Vol./Cap.(X):	0.842
Loss Time (sec):	0 (Y+R=4.0 sec)	Average Delay (sec/veh):	xxxxxx
Optimal Cycle:	118	Level Of Service:	D

Street Name:	Riverside Avenue						W. Coast Highway					
Approach:	North Bound			South Bound			East Bound			West Bound		
Movement:	L - T - R			L - T - R			L - T - R			L - T - R		
Control:	Permitted			Permitted			Protected			Protected		
Rights:	Include			Ovl			Include			Include		
Min. Green:	0	0	0	0	0	0	0	0	0	0	0	0
Lanes:	0 0	1! 0	0	0 1	0 0	1	1 0	1 1	0	1 0	3 0	1
Volume Module:												
Base Vol:	10	11	2	98	2	404	244	1373	5	11	2155	70
Growth Adj:	1.00	1.00	1.00	1.00	1.00	1.00	1.07	1.07	1.07	1.07	1.07	1.07
Initial Bse:	10	11	2	98	2	404	262	1472	5	12	2310	75
Added Vol:	0	0	0	0	0	25	20	241	0	0	276	0
Committed P:	0	0	0	2	0	0	0	138	0	0	139	3
Initial Fut:	10	11	2	100	2	429	282	1851	5	12	2725	78
User Adj:	1.00	1.00	1.00	1.00	1.00	1.00	1.00	1.00	1.00	1.00	1.00	1.00
PHF Adj:	1.00	1.00	1.00	1.00	1.00	1.00	1.00	1.00	1.00	1.00	1.00	1.00
PHF Volume:	10	11	2	100	2	429	282	1851	5	12	2725	78
Reduct Vol:	0	0	0	0	0	0	0	0	0	0	0	0
Reduced Vol:	10	11	2	100	2	429	282	1851	5	12	2725	78
PCE Adj:	1.00	1.00	1.00	1.00	1.00	1.00	1.00	1.00	1.00	1.00	1.00	1.00
MLF Adj:	1.00	1.00	1.00	1.00	1.00	1.00	1.00	1.00	1.00	1.00	1.00	1.00
FinalVolume:	10	11	2	100	2	429	282	1851	5	12	2725	78
OvlAdjVol:						147						
Saturation Flow Module:												
Sat/Lane:	1600	1600	1600	1600	1600	1600	1600	1600	1600	1600	1600	1600
Adjustment:	1.00	1.00	1.00	1.00	1.00	1.00	1.00	1.00	1.00	1.00	1.00	1.00
Lanes:	0.43	0.48	0.09	0.98	0.02	1.00	1.00	1.99	0.01	1.00	3.00	1.00
Final Sat.:	696	765	139	1569	31	1600	1600	3191	9	1600	4800	1600
Capacity Analysis Module:												
Vol/Sat:	0.01	0.01	0.01	0.06	0.06	0.27	0.18	0.58	0.58	0.01	0.57	0.05
OvlAdjV/S:						0.09						
Crit Moves:	****					****	****				****	

Newport Banning Ranch
Year 2016 Cumulative Conditions with Project Bluff Road Alternative
PM Peak Hour

Level Of Service Computation Report
ICU 1(Loss as Cycle Length %) Method (Future Volume Alternative)

Intersection #11 Tustin Ave/W. Coast Hwy

Cycle (sec):	120	Critical Vol./Cap.(X):	0.722
Loss Time (sec):	0 (Y+R=4.0 sec)	Average Delay (sec/veh):	xxxxxx
Optimal Cycle:	67	Level Of Service:	C

Street Name:	Tustin Avenue						W. Coast Highway					
Approach:	North Bound			South Bound			East Bound			West Bound		
Movement:	L - T - R			L - T - R			L - T - R			L - T - R		
Control:	Permitted			Permitted			Protected			Permitted		
Rights:	Include			Include			Include			Include		
Min. Green:	0	0	0	0	0	0	0	0	0	0	0	0
Lanes:	0 0 0 1 0			0 0 1! 0 0			1 0 1 1 0			0 0 3 0 1		
Volume Module:												
Base Vol:	0	1	2	55	0	27	94	1376	20	0	2230	52
Growth Adj:	1.00	1.00	1.00	1.00	1.00	1.00	1.07	1.07	1.07	1.07	1.07	1.07
Initial Bse:	0	1	2	55	0	27	101	1475	21	0	2391	56
Added Vol:	0	0	0	0	0	25	19	222	0	0	252	0
Committed P:	0	0	0	0	0	0	0	140	0	0	143	0
Initial Fut:	0	1	2	55	0	52	120	1837	21	0	2786	56
User Adj:	1.00	1.00	1.00	1.00	1.00	1.00	1.00	1.00	1.00	1.00	1.00	1.00
PHF Adj:	1.00	1.00	1.00	1.00	1.00	1.00	1.00	1.00	1.00	1.00	1.00	1.00
PHF Volume:	0	1	2	55	0	52	120	1837	21	0	2786	56
Reduct Vol:	0	0	0	0	0	0	0	0	0	0	0	0
Reduced Vol:	0	1	2	55	0	52	120	1837	21	0	2786	56
PCE Adj:	1.00	1.00	1.00	1.00	1.00	1.00	1.00	1.00	1.00	1.00	1.00	1.00
MLF Adj:	1.00	1.00	1.00	1.00	1.00	1.00	1.00	1.00	1.00	1.00	1.00	1.00
FinalVolume:	0	1	2	55	0	52	120	1837	21	0	2786	56
Saturation Flow Module:												
Sat/Lane:	1600	1600	1600	1600	1600	1600	1600	1600	1600	1600	1600	1600
Adjustment:	1.00	1.00	1.00	1.00	1.00	1.00	1.00	1.00	1.00	1.00	1.00	1.00
Lanes:	0.00	0.33	0.67	0.51	0.00	0.49	1.00	1.98	0.02	0.00	3.00	1.00
Final Sat.:	0	533	1067	822	0	778	1600	3163	37	0	4800	1600
Capacity Analysis Module:												
Vol/Sat:	0.00	0.00	0.00	0.03	0.00	0.07	0.07	0.58	0.58	0.00	0.58	0.03
Crit Moves:	****					****	****				****	

Newport Banning Ranch
Year 2016 Cumulative Conditions with Project Bluff Road Alternative
PM Peak Hour

Level Of Service Computation Report
ICU 1(Loss as Cycle Length %) Method (Future Volume Alternative)

Intersection #12 Dover Dr/W. Coast Hwy

Cycle (sec):	120	Critical Vol./Cap.(X):	0.859
Loss Time (sec):	0 (Y+R=4.0 sec)	Average Delay (sec/veh):	xxxxxx
Optimal Cycle:	162	Level Of Service:	D

Street Name:	Dover Drive						W. Coast Highway					
Approach:	North Bound			South Bound			East Bound			West Bound		
Movement:	L - T - R			L - T - R			L - T - R			L - T - R		
Control:	Split Phase			Split Phase			Protected			Protected		
Rights:	Include			Include			Include			Ignore		
Min. Green:	0	0	0	0	0	0	0	0	0	0	0	0
Lanes:	1 0 1	1 0		3 0 1	0 1		2 0 2	1 0		1 0 3	0 1	
Volume Module:												
Base Vol:	35	42	41	918	61	119	145	1270	25	50	2153	1021
Growth Adj:	1.00	1.00	1.00	1.00	1.00	1.00	1.07	1.07	1.07	1.07	1.07	1.07
Initial Bse:	35	42	41	918	61	119	155	1361	27	54	2308	1095
Added Vol:	5	0	0	110	0	14	11	206	5	0	233	75
Committed P:	0	0	0	3	0	23	34	132	0	0	127	12
Initial Fut:	40	42	41	1031	61	156	200	1699	32	54	2668	1182
User Adj:	1.00	1.00	1.00	1.00	1.00	1.00	1.00	1.00	1.00	1.00	1.00	0.00
PHF Adj:	1.00	1.00	1.00	1.00	1.00	1.00	1.00	1.00	1.00	1.00	1.00	0.00
PHF Volume:	40	42	41	1031	61	156	200	1699	32	54	2668	0
Reduct Vol:	0	0	0	0	0	0	0	0	0	0	0	0
Reduced Vol:	40	42	41	1031	61	156	200	1699	32	54	2668	0
PCE Adj:	1.00	1.00	1.00	1.00	1.00	1.00	1.00	1.00	1.00	1.00	1.00	0.00
MLF Adj:	1.00	1.00	1.00	1.00	1.00	1.00	1.00	1.00	1.00	1.00	1.00	0.00
FinalVolume:	40	42	41	1031	61	156	200	1699	32	54	2668	0
Saturation Flow Module:												
Sat/Lane:	1600	1600	1600	1600	1600	1600	1600	1600	1600	1600	1600	1600
Adjustment:	1.00	1.00	1.00	1.00	1.00	1.00	1.00	1.00	1.00	1.00	1.00	1.00
Lanes:	1.00	1.01	0.99	3.00	1.00	1.00	2.00	2.94	0.06	1.00	3.00	1.00
Final Sat.:	1600	1619	1581	4800	1600	1600	3200	4712	88	1600	4800	1600
Capacity Analysis Module:												
Vol/Sat:	0.03	0.03	0.03	0.21	0.04	0.10	0.06	0.36	0.36	0.03	0.56	0.00
Crit Moves:			****	****			****				****	

Newport Banning Ranch
Year 2016 Cumulative Conditions with Project Bluff Road Alternative
PM Peak Hour

Level Of Service Computation Report
ICU 1(Loss as Cycle Length %) Method (Future Volume Alternative)

Intersection #13 Magnolia St/Hamilton Ave

Cycle (sec):	100	Critical Vol./Cap.(X):	0.661
Loss Time (sec):	5 (Y+R=4.0 sec)	Average Delay (sec/veh):	xxxxxx
Optimal Cycle:	33	Level Of Service:	B

Street Name:	Magnolia Street									Hamilton Avenue								
Approach:	North Bound					South Bound				East Bound					West Bound			
Movement:	L	-	T	-	R	L	-	T	- R	L	-	T	-	R	L	-	T	- R
Control:	Prot+Permit					Prot+Permit				Permitted					Permitted			
Rights:	Include					Include				Include					Include			
Min. Green:	0	0	0			0	0	0		0	0	0			0	0	0	
Lanes:	1	0	1	1	0	1	0	2	0 1	1	0	0	1	0	1	0	1	0 1
Volume Module:																		
Base Vol:	100	365		55		192	247		25	9	188		71		71	413		379
Growth Adj:	1.07	1.07		1.07		1.07	1.07		1.07	1.07	1.07		1.07		1.07	1.07		1.07
Initial Bse:	107	391		59		206	265		27	10	202		76		76	443		406
Added Vol:	50	74		24		18	112		32	18	55		68		38	68		15
Committed P:	4	6		0		0	5		0	0	0		2		0	0		0
Initial Fut:	161	471		83		224	382		59	28	257		146		114	511		421
User Adj:	1.00	1.00		1.00		1.00	1.00		1.00	1.00	1.00		1.00		1.00	1.00		1.00
PHF Adj:	1.00	1.00		1.00		1.00	1.00		1.00	1.00	1.00		1.00		1.00	1.00		1.00
PHF Volume:	161	471		83		224	382		59	28	257		146		114	511		421
Reduct Vol:	0	0		0		0	0		0	0	0		0		0	0		0
Reduced Vol:	161	471		83		224	382		59	28	257		146		114	511		421
PCE Adj:	1.00	1.00		1.00		1.00	1.00		1.00	1.00	1.00		1.00		1.00	1.00		1.00
MLF Adj:	1.00	1.00		1.00		1.00	1.00		1.00	1.00	1.00		1.00		1.00	1.00		1.00
FinalVolume:	161	471		83		224	382		59	28	257		146		114	511		421
Saturation Flow Module:																		
Sat/Lane:	1600	1600		1600		1600	1600		1600	1600	1600		1600		1600	1600		1600
Adjustment:	1.06	1.06		1.06		1.06	1.06		1.06	1.06	1.06		1.06		1.06	1.06		1.06
Lanes:	1.00	1.70		0.30		1.00	2.00		1.00	1.00	0.64		0.36		1.00	1.00		1.00
Final Sat.:	1700	2891		509		1700	3400		1700	1700	1083		617		1700	1700		1700
Capacity Analysis Module:																		
Vol/Sat:	0.09	0.16		0.16		0.13	0.11		0.03	0.02	0.24		0.24		0.07	0.30		0.25
Crit Moves:		****				****				****						****		

Newport Banning Ranch
Year 2016 Cumulative Conditions with Project Bluff Road Alternative
PM Peak Hour

Level Of Service Computation Report
ICU 1(Loss as Cycle Length %) Method (Future Volume Alternative)

Intersection #14 Bushard St/Hamilton Ave

Cycle (sec):	100	Critical Vol./Cap.(X):	0.598
Loss Time (sec):	5 (Y+R=4.0 sec)	Average Delay (sec/veh):	xxxxxx
Optimal Cycle:	29	Level Of Service:	A

Street Name:	Bushard Street						Hamilton Avenue					
Approach:	North Bound			South Bound			East Bound			West Bound		
Movement:	L - T - R			L - T - R			L - T - R			L - T - R		
Control:	Permitted			Permitted			Permitted			Permitted		
Rights:	Include			Include			Include			Include		
Min. Green:	0	0	0	0	0	0	0	0	0	0	0	0
Lanes:	1 0 1	1 0		1 0 1	1 0		1 0 1	1 0		1 0 1	1 0	
Volume Module:												
Base Vol:	55	265	43	117	143	39	26	355	43	44	779	251
Growth Adj:	1.07	1.07	1.07	1.07	1.07	1.07	1.07	1.07	1.07	1.07	1.07	1.07
Initial Bse:	59	284	46	125	153	42	28	381	46	47	835	269
Added Vol:	0	0	0	0	0	0	0	98	0	0	121	0
Committed P:	0	0	0	0	0	0	0	0	0	0	0	0
Initial Fut:	59	284	46	125	153	42	28	479	46	47	956	269
User Adj:	1.00	1.00	1.00	1.00	1.00	1.00	1.00	1.00	1.00	1.00	1.00	1.00
PHF Adj:	1.00	1.00	1.00	1.00	1.00	1.00	1.00	1.00	1.00	1.00	1.00	1.00
PHF Volume:	59	284	46	125	153	42	28	479	46	47	956	269
Reduct Vol:	0	0	0	0	0	0	0	0	0	0	0	0
Reduced Vol:	59	284	46	125	153	42	28	479	46	47	956	269
PCE Adj:	1.00	1.00	1.00	1.00	1.00	1.00	1.00	1.00	1.00	1.00	1.00	1.00
MLF Adj:	1.00	1.00	1.00	1.00	1.00	1.00	1.00	1.00	1.00	1.00	1.00	1.00
FinalVolume:	59	284	46	125	153	42	28	479	46	47	956	269
Saturation Flow Module:												
Sat/Lane:	1600	1600	1600	1600	1600	1600	1600	1600	1600	1600	1600	1600
Adjustment:	1.06	1.06	1.06	1.06	1.06	1.06	1.06	1.06	1.06	1.06	1.06	1.06
Lanes:	1.00	1.72	0.28	1.00	1.57	0.43	1.00	1.82	0.18	1.00	1.56	0.44
Final Sat.:	1700	2925	475	1700	2671	729	1700	3101	299	1700	2653	747
Capacity Analysis Module:												
Vol/Sat:	0.03	0.10	0.10	0.07	0.06	0.06	0.02	0.15	0.15	0.03	0.36	0.36
Crit Moves:		****		****			****				****	

Newport Banning Ranch
Year 2016 Cumulative Conditions with Project Bluff Road Alternative
PM Peak Hour

Level Of Service Computation Report
ICU 1(Loss as Cycle Length %) Method (Future Volume Alternative)

Intersection #15 Brookhurst St/Hamilton Ave (Victoria St)

Cycle (sec):	100	Critical Vol./Cap.(X):	0.716
Loss Time (sec):	5 (Y+R=4.0 sec)	Average Delay (sec/veh):	xxxxxx
Optimal Cycle:	39	Level Of Service:	C

Street Name:	Brookhurst						Hamilton Avenue (Victoria Street)					
Approach:	North Bound			South Bound			East Bound			West Bound		
Movement:	L - T - R			L - T - R			L - T - R			L - T - R		
Control:	Protected			Protected			Prot+Permit			Prot+Permit		
Rights:	Include			Include			Include			Include		
Min. Green:	0	0	0	0	0	0	0	0	0	0	0	0
Lanes:	1 0 3 0 1			2 0 2 1 0			1 0 1 1 0			1 0 2 0 1		
Volume Module:												
Base Vol:	117	581	192	397	335	106	113	353	67	277	943	489
Growth Adj:	1.07	1.07	1.07	1.07	1.07	1.07	1.07	1.07	1.07	1.07	1.07	1.07
Initial Bse:	125	623	206	426	359	114	121	378	72	297	1011	524
Added Vol:	28	42	4	11	58	70	42	20	35	4	22	4
Committed P:	0	5	0	0	0	0	0	0	0	0	0	0
Initial Fut:	153	670	210	437	417	184	163	398	107	301	1033	528
User Adj:	1.00	1.00	1.00	1.00	1.00	1.00	1.00	1.00	1.00	1.00	1.00	1.00
PHF Adj:	1.00	1.00	1.00	1.00	1.00	1.00	1.00	1.00	1.00	1.00	1.00	1.00
PHF Volume:	153	670	210	437	417	184	163	398	107	301	1033	528
Reduct Vol:	0	0	0	0	0	0	0	0	0	0	0	0
Reduced Vol:	153	670	210	437	417	184	163	398	107	301	1033	528
PCE Adj:	1.00	1.00	1.00	1.00	1.00	1.00	1.00	1.00	1.00	1.00	1.00	1.00
MLF Adj:	1.00	1.00	1.00	1.00	1.00	1.00	1.00	1.00	1.00	1.00	1.00	1.00
FinalVolume:	153	670	210	437	417	184	163	398	107	301	1033	528
Saturation Flow Module:												
Sat/Lane:	1600	1600	1600	1600	1600	1600	1600	1600	1600	1600	1600	1600
Adjustment:	1.06	1.06	1.06	1.06	1.06	1.06	1.06	1.06	1.06	1.06	1.06	1.06
Lanes:	1.00	3.00	1.00	2.00	2.08	0.92	1.00	1.58	0.42	1.00	2.00	1.00
Final Sat.:	1700	5100	1700	3400	3541	1559	1700	2681	719	1700	3400	1700
Capacity Analysis Module:												
Vol/Sat:	0.09	0.13	0.12	0.13	0.12	0.12	0.10	0.15	0.15	0.18	0.30	0.31
Crit Moves:		****		****			****					****

Newport Banning Ranch
Year 2016 Cumulative Conditions with Project Bluff Road Alternative
PM Peak Hour

Level Of Service Computation Report
ICU 1(Loss as Cycle Length %) Method (Future Volume Alternative)

Intersection #16 Magnolia St/Banning Ave

Cycle (sec):	100	Critical Vol./Cap.(X):	0.339
Loss Time (sec):	5 (Y+R=4.0 sec)	Average Delay (sec/veh):	xxxxxx
Optimal Cycle:	18	Level Of Service:	A

Street Name:	Magnolia Street									Banning Avenue								
Approach:	North Bound			South Bound			East Bound			West Bound		
Movement:	L	- T	- R	L	- T	- R	L	- T	- R	L	- T	- R
Control:	Protected			Protected			Split Phase			Split Phase		
Rights:	Include			Include			Include			Include		
Min. Green:	0	0	0	0	0	0	0	0	0	0	0	0
Lanes:	0 0	1 1	0	1 0	2 0	0	0 0	0 0	0	2 0	0 0	1
Volume Module:												
Base Vol:	0	435	60	76	300	0	0	0	0	23	0	56
Growth Adj:	1.07	1.07	1.07	1.07	1.07	1.07	1.07	1.07	1.07	1.07	1.07	1.07
Initial Bse:	0	466	64	81	322	0	0	0	0	25	0	60
Added Vol:	0	95	4	13	102	0	0	0	0	4	0	13
Committed P:	0	18	0	0	11	0	0	0	0	0	0	0
Initial Fut:	0	579	68	94	435	0	0	0	0	29	0	73
User Adj:	1.00	1.00	1.00	1.00	1.00	1.00	1.00	1.00	1.00	1.00	1.00	1.00
PHF Adj:	1.00	1.00	1.00	1.00	1.00	1.00	1.00	1.00	1.00	1.00	1.00	1.00
PHF Volume:	0	579	68	94	435	0	0	0	0	29	0	73
Reduct Vol:	0	0	0	0	0	0	0	0	0	0	0	0
Reduced Vol:	0	579	68	94	435	0	0	0	0	29	0	73
PCE Adj:	1.00	1.00	1.00	1.00	1.00	1.00	1.00	1.00	1.00	1.00	1.00	1.00
MLF Adj:	1.00	1.00	1.00	1.00	1.00	1.00	1.00	1.00	1.00	1.00	1.00	1.00
FinalVolume:	0	579	68	94	435	0	0	0	0	29	0	73
Saturation Flow Module:												
Sat/Lane:	1600	1600	1600	1600	1600	1600	1600	1600	1600	1600	1600	1600
Adjustment:	1.06	1.06	1.06	1.06	1.06	1.06	1.06	1.06	1.06	1.06	1.06	1.06
Lanes:	0.00	1.79	0.21	1.00	2.00	0.00	0.00	0.00	0.00	2.00	0.00	1.00
Final Sat.:	0	3041	359	1700	3400	0	0	0	0	3400	0	1700
Capacity Analysis Module:												
Vol/Sat:	0.00	0.19	0.19	0.06	0.13	0.00	0.00	0.00	0.00	0.01	0.00	0.04
Crit Moves:		****		****								****

Newport Banning Ranch
Year 2016 Cumulative Conditions with Project Bluff Road Alternative
PM Peak Hour

Level Of Service Computation Report
2000 HCM 4-Way Stop Method (Future Volume Alternative)

Intersection #17 Bushard St/Banning Ave

Cycle (sec):	100	Critical Vol./Cap.(X):	0.204
Loss Time (sec):	5 (Y+R=4.0 sec)	Average Delay (sec/veh):	9.4
Optimal Cycle:	0	Level Of Service:	A

Street Name:	Bushard Street						Banning Avenue					
Approach:	North Bound			South Bound			East Bound			West Bound		
Movement:	L - T - R			L - T - R			L - T - R			L - T - R		
Control:	Stop Sign			Stop Sign			Stop Sign			Stop Sign		
Rights:	Include			Include			Include			Include		
Min. Green:	0	0	0	0	0	0	0	0	0	0	0	0
Lanes:	1 0 1	1 0		1 0 1	1 0		1 0 0	1 0		1 0 0	1 0	
Volume Module:												
Base Vol:	28	213	23	12	116	38	25	52	10	24	50	21
Growth Adj:	1.07	1.07	1.07	1.07	1.07	1.07	1.07	1.07	1.07	1.07	1.07	1.07
Initial Bse:	30	228	25	13	124	41	27	56	11	26	54	23
Added Vol:	7	0	0	0	0	0	0	10	8	0	9	0
Committed P:	0	3	0	0	2	0	0	0	0	0	0	0
Initial Fut:	37	231	25	13	126	41	27	66	19	26	63	23
User Adj:	1.00	1.00	1.00	1.00	1.00	1.00	1.00	1.00	1.00	1.00	1.00	1.00
PHF Adj:	1.00	1.00	1.00	1.00	1.00	1.00	1.00	1.00	1.00	1.00	1.00	1.00
PHF Volume:	37	231	25	13	126	41	27	66	19	26	63	23
Reduct Vol:	0	0	0	0	0	0	0	0	0	0	0	0
Reduced Vol:	37	231	25	13	126	41	27	66	19	26	63	23
PCE Adj:	1.00	1.00	1.00	1.00	1.00	1.00	1.00	1.00	1.00	1.00	1.00	1.00
MLF Adj:	1.00	1.00	1.00	1.00	1.00	1.00	1.00	1.00	1.00	1.00	1.00	1.00
FinalVolume:	37	231	25	13	126	41	27	66	19	26	63	23
Saturation Flow Module:												
Adjustment:	1.00	1.00	1.00	1.00	1.00	1.00	1.00	1.00	1.00	1.00	1.00	1.00
Lanes:	1.00	1.81	0.19	1.00	1.51	0.49	1.00	0.78	0.22	1.00	0.74	0.26
Final Sat.:	569	1132	122	544	910	304	538	464	132	538	441	159
Capacity Analysis Module:												
Vol/Sat:	0.07	0.20	0.20	0.02	0.14	0.13	0.05	0.14	0.14	0.05	0.14	0.14
Crit Moves:		****			****				****		****	
Delay/Veh:	9.2	9.6	9.5	9.2	9.3	9.0	9.3	9.2	9.2	9.3	9.2	9.2
Delay Adj:	1.00	1.00	1.00	1.00	1.00	1.00	1.00	1.00	1.00	1.00	1.00	1.00
AdjDel/Veh:	9.2	9.6	9.5	9.2	9.3	9.0	9.3	9.2	9.2	9.3	9.2	9.2
LOS by Move:	A	A	A	A	A	A	A	A	A	A	A	A
ApproachDel:		9.5			9.2			9.3			9.2	
Delay Adj:		1.00			1.00			1.00			1.00	
ApprAdjDel:		9.5			9.2			9.3			9.2	
LOS by Appr:		A			A			A			A	
AllWayAvgQ:	0.1	0.2	0.2	0.0	0.1	0.1	0.0	0.1	0.1	0.0	0.1	0.1

Newport Banning Ranch
Year 2016 Cumulative Conditions with Project Bluff Road Alternative
PM Peak Hour

Note: Queue reported is the number of cars per lane.
****

Newport Banning Ranch
Year 2016 Cumulative Conditions with Project Bluff Road Alternative
PM Peak Hour

Level Of Service Computation Report
ICU 1(Loss as Cycle Length %) Method (Future Volume Alternative)

Intersection #18 Brookhurst St/Banning Ave

Cycle (sec):	100	Critical Vol./Cap.(X):	0.271
Loss Time (sec):	5 (Y+R=4.0 sec)	Average Delay (sec/veh):	xxxxxx
Optimal Cycle:	17	Level Of Service:	A

Street Name:	Brookhurst Street						Banning Avenue					
Approach:	North Bound			South Bound			East Bound			West Bound		
Movement:	L - T - R			L - T - R			L - T - R			L - T - R		
Control:	Protected			Protected			Split Phase			Split Phase		
Rights:	Include			Include			Include			Include		
Min. Green:	0	0	0	0	0	0	0	0	0	0	0	0
Lanes:	1 0 3 0 0			0 0 2 1 0			1 0 0 0 1			0 0 0 0 0		
Volume Module:												
Base Vol:	12	769	0	0	509	100	61	0	7	0	0	0
Growth Adj:	1.07	1.07	1.07	1.07	1.07	1.07	1.07	1.07	1.07	1.07	1.07	1.07
Initial Bse:	13	824	0	0	546	107	65	0	8	0	0	0
Added Vol:	0	65	0	0	87	9	10	0	0	0	0	0
Committed P:	0	10	0	0	4	0	0	0	0	0	0	0
Initial Fut:	13	899	0	0	637	116	75	0	8	0	0	0
User Adj:	1.00	1.00	1.00	1.00	1.00	1.00	1.00	1.00	1.00	1.00	1.00	1.00
PHF Adj:	1.00	1.00	1.00	1.00	1.00	1.00	1.00	1.00	1.00	1.00	1.00	1.00
PHF Volume:	13	899	0	0	637	116	75	0	8	0	0	0
Reduct Vol:	0	0	0	0	0	0	0	0	0	0	0	0
Reduced Vol:	13	899	0	0	637	116	75	0	8	0	0	0
PCE Adj:	1.00	1.00	1.00	1.00	1.00	1.00	1.00	1.00	1.00	1.00	1.00	1.00
MLF Adj:	1.00	1.00	1.00	1.00	1.00	1.00	1.00	1.00	1.00	1.00	1.00	1.00
FinalVolume:	13	899	0	0	637	116	75	0	8	0	0	0
Saturation Flow Module:												
Sat/Lane:	1600	1600	1600	1600	1600	1600	1600	1600	1600	1600	1600	1600
Adjustment:	1.06	1.06	1.06	1.06	1.06	1.06	1.06	1.06	1.06	1.06	1.06	1.06
Lanes:	1.00	3.00	0.00	0.00	2.54	0.46	1.00	0.00	1.00	0.00	0.00	0.00
Final Sat.:	1700	5100	0	0	4313	787	1700	0	1700	0	0	0
Capacity Analysis Module:												
Vol/Sat:	0.01	0.18	0.00	0.00	0.15	0.15	0.04	0.00	0.00	0.00	0.00	0.00
Crit Moves:		****		****			****					

Newport Banning Ranch
Year 2016 Cumulative Conditions with Project Bluff Road Alternative
PM Peak Hour

Level Of Service Computation Report
ICU 1(Loss as Cycle Length %) Method (Future Volume Alternative)

Intersection #19 Magnolia St/PCH

Cycle (sec):	120	Critical Vol./Cap.(X):	0.697
Loss Time (sec):	6 (Y+R=4.0 sec)	Average Delay (sec/veh):	xxxxxx
Optimal Cycle:	41	Level Of Service:	B

Street Name:	Magnolia Street						Pacific Coast Highway					
Approach:	North Bound			South Bound			East Bound			West Bound		
Movement:	L - T - R			L - T - R			L - T - R			L - T - R		
Control:	Split Phase			Split Phase			Protected			Protected		
Rights:	Include			Include			Include			Include		
Min. Green:	0	0	0	0	0	0	0	0	0	0	0	0
Lanes:	1 0 0 1 0			1 1 0 0 1			1 0 3 0 1			1 0 3 0 1		
Volume Module:												
Base Vol:	10	22	15	101	30	152	137	885	17	30	1706	295
Growth Adj:	1.07	1.07	1.07	1.07	1.07	1.07	1.07	1.07	1.07	1.07	1.07	1.07
Initial Bse:	11	24	16	108	32	163	147	949	18	32	1829	316
Added Vol:	0	0	0	76	0	30	37	229	0	0	170	62
Committed P:	0	0	0	11	0	0	0	31	0	0	53	18
Initial Fut:	11	24	16	195	32	193	184	1209	18	32	2052	396
User Adj:	1.00	1.00	1.00	1.00	1.00	1.00	1.00	1.00	1.00	1.00	1.00	1.00
PHF Adj:	1.00	1.00	1.00	1.00	1.00	1.00	1.00	1.00	1.00	1.00	1.00	1.00
PHF Volume:	11	24	16	195	32	193	184	1209	18	32	2052	396
Reduct Vol:	0	0	0	0	0	0	0	0	0	0	0	0
Reduced Vol:	11	24	16	195	32	193	184	1209	18	32	2052	396
PCE Adj:	1.00	1.00	1.00	1.00	1.00	1.00	1.00	1.00	1.00	1.00	1.00	1.00
MLF Adj:	1.00	1.00	1.00	1.00	1.00	1.00	1.00	1.00	1.00	1.00	1.00	1.00
FinalVolume:	11	24	16	195	32	193	184	1209	18	32	2052	396
Saturation Flow Module:												
Sat/Lane:	1600	1600	1600	1600	1600	1600	1600	1600	1600	1600	1600	1600
Adjustment:	1.06	1.06	1.06	1.06	1.06	1.06	1.06	1.06	1.06	1.06	1.06	1.06
Lanes:	1.00	0.59	0.41	1.72	0.28	1.00	1.00	3.00	1.00	1.00	3.00	1.00
Final Sat.:	1700	1011	689	2919	481	1700	1700	5100	1700	1700	5100	1700
Capacity Analysis Module:												
Vol/Sat:	0.01	0.02	0.02	0.07	0.07	0.11	0.11	0.24	0.01	0.02	0.40	0.23
Crit Moves:		****				****	****				****	

Newport Banning Ranch
Year 2016 Cumulative Conditions with Project Bluff Road Alternative
PM Peak Hour

Level Of Service Computation Report
ICU 1(Loss as Cycle Length %) Method (Future Volume Alternative)

Intersection #20 Brookhurst St/Bushard St

Cycle (sec):	100	Critical Vol./Cap.(X):	0.372
Loss Time (sec):	5 (Y+R=4.0 sec)	Average Delay (sec/veh):	xxxxxx
Optimal Cycle:	19	Level Of Service:	A

Street Name:	Brookhurst Street						Bushard Street					
Approach:	North Bound			South Bound			East Bound			West Bound		
Movement:	L - T - R			L - T - R			L - T - R			L - T - R		
Control:	Protected			Protected			Permitted			Permitted		
Rights:	Include			Include			Include			Include		
Min. Green:	0	0	0	0	0	0	0	0	0	0	0	0
Lanes:	1 0 2	1 0		1 0 3	0 1		1 0 0	0 1		0 0 1!	0 0	
Volume Module:												
Base Vol:	222	662	0	0	430	22	13	0	92	0	0	0
Growth Adj:	1.07	1.07	1.07	1.07	1.07	1.07	1.07	1.07	1.07	1.07	1.07	1.07
Initial Bse:	238	710	0	0	461	24	14	0	99	0	0	0
Added Vol:	6	65	0	0	87	0	0	0	8	0	0	0
Committed P:	6	18	0	0	8	0	0	0	5	0	0	0
Initial Fut:	250	793	0	0	556	24	14	0	112	0	0	0
User Adj:	1.00	1.00	1.00	1.00	1.00	1.00	1.00	1.00	1.00	1.00	1.00	1.00
PHF Adj:	1.00	1.00	1.00	1.00	1.00	1.00	1.00	1.00	1.00	1.00	1.00	1.00
PHF Volume:	250	793	0	0	556	24	14	0	112	0	0	0
Reduct Vol:	0	0	0	0	0	0	0	0	0	0	0	0
Reduced Vol:	250	793	0	0	556	24	14	0	112	0	0	0
PCE Adj:	1.00	1.00	1.00	1.00	1.00	1.00	1.00	1.00	1.00	1.00	1.00	1.00
MLF Adj:	1.00	1.00	1.00	1.00	1.00	1.00	1.00	1.00	1.00	1.00	1.00	1.00
FinalVolume:	250	793	0	0	556	24	14	0	112	0	0	0
Saturation Flow Module:												
Sat/Lane:	1600	1600	1600	1600	1600	1600	1600	1600	1600	1600	1600	1600
Adjustment:	1.06	1.06	1.06	1.06	1.06	1.06	1.06	1.06	1.06	1.06	1.06	1.06
Lanes:	1.00	3.00	0.00	1.00	3.00	1.00	1.00	0.00	1.00	0.00	1.00	0.00
Final Sat.:	1700	5100	0	1700	5100	1700	1700	0	1700	0	1700	0
Capacity Analysis Module:												
Vol/Sat:	0.15	0.16	0.00	0.00	0.11	0.01	0.01	0.00	0.07	0.00	0.00	0.00
Crit Moves:	****				****				****			

Newport Banning Ranch
Year 2016 Cumulative Conditions with Project Bluff Road Alternative
PM Peak Hour

Level Of Service Computation Report
ICU 1(Loss as Cycle Length %) Method (Future Volume Alternative)

Intersection #21 Brookhurst St/PCH

Cycle (sec):	120	Critical Vol./Cap.(X):	0.778
Loss Time (sec):	6 (Y+R=4.0 sec)	Average Delay (sec/veh):	xxxxxx
Optimal Cycle:	53	Level Of Service:	C

Street Name:	Brookhurst Street						Pacific Coast HIghway					
Approach:	North Bound			South Bound			East Bound			West Bound		
Movement:	L - T - R			L - T - R			L - T - R			L - T - R		
Control:	Split Phase			Split Phase			Protected			Protected		
Rights:	Include			Include			Include			Ovl		
Min. Green:	0	0	0	0	0	0	0	0	0	0	0	0
Lanes:	1 0 0 1 0			2 0 1 0 1			1 0 3 0 1			1 0 3 0 1		
Volume Module:												
Base Vol:	8	23	17	324	6	179	182	797	2	13	1871	757
Growth Adj:	1.07	1.07	1.07	1.07	1.07	1.07	1.07	1.07	1.07	1.07	1.07	1.07
Initial Bse:	9	25	18	347	6	192	195	854	2	14	2006	812
Added Vol:	0	0	0	92	0	4	4	301	0	0	228	66
Committed P:	0	0	0	14	0	0	0	42	0	0	71	24
Initial Fut:	9	25	18	453	6	196	199	1197	2	14	2305	902
User Adj:	1.00	1.00	1.00	1.00	1.00	1.00	1.00	1.00	1.00	1.00	1.00	1.00
PHF Adj:	1.00	1.00	1.00	1.00	1.00	1.00	1.00	1.00	1.00	1.00	1.00	1.00
PHF Volume:	9	25	18	453	6	196	199	1197	2	14	2305	902
Reduct Vol:	0	0	0	0	0	0	0	0	0	0	0	0
Reduced Vol:	9	25	18	453	6	196	199	1197	2	14	2305	902
PCE Adj:	1.00	1.00	1.00	1.00	1.00	1.00	1.00	1.00	1.00	1.00	1.00	1.00
MLF Adj:	1.00	1.00	1.00	1.00	1.00	1.00	1.00	1.00	1.00	1.00	1.00	1.00
FinalVolume:	9	25	18	453	6	196	199	1197	2	14	2305	902
OvlAdjVol:												675
Saturation Flow Module:												
Sat/Lane:	1600	1600	1600	1600	1600	1600	1600	1600	1600	1600	1600	1600
Adjustment:	1.06	1.06	1.06	1.06	1.06	1.06	1.06	1.06	1.06	1.06	1.06	1.06
Lanes:	1.00	0.57	0.43	2.00	1.00	1.00	1.00	3.00	1.00	1.00	3.00	1.00
Final Sat.:	1700	978	723	3400	1700	1700	1700	5100	1700	1700	5100	1700
Capacity Analysis Module:												
Vol/Sat:	0.01	0.03	0.03	0.13	0.00	0.12	0.12	0.23	0.00	0.01	0.45	0.53
OvlAdjV/S:												0.40
Crit Moves:			****	****			****				****	

Newport Banning Ranch
Year 2016 Cumulative Conditions with Project Bluff Road Alternative
PM Peak Hour

Level Of Service Computation Report
ICU 1(Loss as Cycle Length %) Method (Future Volume Alternative)

Intersection #22 Placentia Ave/Victoria St

Cycle (sec):	100	Critical Vol./Cap.(X):	0.878
Loss Time (sec):	0 (Y+R=4.0 sec)	Average Delay (sec/veh):	xxxxxx
Optimal Cycle:	180	Level Of Service:	D

Street Name:	Placentia Avenue						Victoria Street					
Approach:	North Bound			South Bound			East Bound			West Bound		
Movement:	L - T - R			L - T - R			L - T - R			L - T - R		
Control:	Protected			Protected			Protected			Protected		
Rights:	Include			Include			Ovl			Include		
Min. Green:	0	0	0	0	0	0	0	0	0	0	0	0
Lanes:	2 0 2 0 1			1 0 2 0 1			1 0 2 0 1			1 0 2 0 1		
Volume Module:												
Base Vol:	520	674	157	103	490	152	71	587	306	166	1376	87
Growth Adj:	1.07	1.07	1.07	1.07	1.07	1.07	1.07	1.07	1.07	1.07	1.07	1.07
Initial Bse:	557	723	168	110	525	163	76	629	328	178	1475	93
Added Vol:	4	46	48	0	69	0	0	27	12	111	27	0
Committed P:	0	0	0	0	0	0	0	0	0	0	0	0
Initial Fut:	561	769	216	110	594	163	76	656	340	289	1502	93
User Adj:	1.00	1.00	1.00	1.00	1.00	1.00	1.00	1.00	1.00	1.00	1.00	1.00
PHF Adj:	1.00	1.00	1.00	1.00	1.00	1.00	1.00	1.00	1.00	1.00	1.00	1.00
PHF Volume:	561	769	216	110	594	163	76	656	340	289	1502	93
Reduct Vol:	0	0	0	0	0	0	0	0	0	0	0	0
Reduced Vol:	561	769	216	110	594	163	76	656	340	289	1502	93
PCE Adj:	1.00	1.00	1.00	1.00	1.00	1.00	1.00	1.00	1.00	1.00	1.00	1.00
MLF Adj:	1.00	1.00	1.00	1.00	1.00	1.00	1.00	1.00	1.00	1.00	1.00	1.00
FinalVolume:	561	769	216	110	594	163	76	656	340	289	1502	93
OvlAdjVol:									59			
Saturation Flow Module:												
Sat/Lane:	1600	1600	1600	1600	1600	1600	1600	1600	1600	1600	1600	1600
Adjustment:	1.00	1.00	1.00	1.00	1.00	1.00	1.00	1.00	1.00	1.00	1.00	1.00
Lanes:	2.00	2.00	1.00	1.00	2.00	1.00	1.00	2.00	1.00	1.00	2.00	1.00
Final Sat.:	3200	3200	1600	1600	3200	1600	1600	3200	1600	1600	3200	1600
Capacity Analysis Module:												
Vol/Sat:	0.18	0.24	0.14	0.07	0.19	0.10	0.05	0.21	0.21	0.18	0.47	0.06
OvlAdjV/S:									0.04			
Crit Moves:	****				****		****				****	

Newport Banning Ranch
Year 2016 Cumulative Conditions with Project Bluff Road Alternative
PM Peak Hour

Level Of Service Computation Report
ICU 1(Loss as Cycle Length %) Method (Future Volume Alternative)

Intersection #23 Pomona Ave/Victoria St

Cycle (sec):	100	Critical Vol./Cap.(X):	0.757
Loss Time (sec):	0 (Y+R=4.0 sec)	Average Delay (sec/veh):	xxxxxx
Optimal Cycle:	59	Level Of Service:	C

Street Name:	Pomona Avenue						Victoria Street					
Approach:	North Bound			South Bound			East Bound			West Bound		
Movement:	L - T - R			L - T - R			L - T - R			L - T - R		
Control:	Permitted			Permitted			Permitted			Permitted		
Rights:	Include			Include			Include			Include		
Min. Green:	0	0	0	0	0	0	0	0	0	0	0	0
Lanes:	1 0 0 1 0			1 0 0 1 0			1 0 2 0 1			1 0 2 0 1		
Volume Module:												
Base Vol:	50	138	119	20	145	28	21	806	79	118	1526	29
Growth Adj:	1.07	1.07	1.07	1.07	1.07	1.07	1.07	1.07	1.07	1.07	1.07	1.07
Initial Bse:	54	148	128	21	155	30	23	864	85	126	1636	31
Added Vol:	0	0	5	0	0	0	0	74	1	7	137	0
Committed P:	0	0	0	0	0	0	0	0	0	0	0	0
Initial Fut:	54	148	133	21	155	30	23	938	86	133	1773	31
User Adj:	1.00	1.00	1.00	1.00	1.00	1.00	1.00	1.00	1.00	1.00	1.00	1.00
PHF Adj:	1.00	1.00	1.00	1.00	1.00	1.00	1.00	1.00	1.00	1.00	1.00	1.00
PHF Volume:	54	148	133	21	155	30	23	938	86	133	1773	31
Reduct Vol:	0	0	0	0	0	0	0	0	0	0	0	0
Reduced Vol:	54	148	133	21	155	30	23	938	86	133	1773	31
PCE Adj:	1.00	1.00	1.00	1.00	1.00	1.00	1.00	1.00	1.00	1.00	1.00	1.00
MLF Adj:	1.00	1.00	1.00	1.00	1.00	1.00	1.00	1.00	1.00	1.00	1.00	1.00
FinalVolume:	54	148	133	21	155	30	23	938	86	133	1773	31
Saturation Flow Module:												
Sat/Lane:	1600	1600	1600	1600	1600	1600	1600	1600	1600	1600	1600	1600
Adjustment:	1.00	1.00	1.00	1.00	1.00	1.00	1.00	1.00	1.00	1.00	1.00	1.00
Lanes:	1.00	0.53	0.47	1.00	0.84	0.16	1.00	2.00	1.00	1.00	2.00	1.00
Final Sat.:	1600	844	756	1600	1341	259	1600	3200	1600	1600	3200	1600
Capacity Analysis Module:												
Vol/Sat:	0.03	0.18	0.18	0.01	0.12	0.12	0.01	0.29	0.05	0.08	0.55	0.02
Crit Moves:		****		****			****				****	

Newport Banning Ranch
Year 2016 Cumulative Conditions with Project Bluff Road Alternative
PM Peak Hour

Level Of Service Computation Report
ICU 1(Loss as Cycle Length %) Method (Future Volume Alternative)

Intersection #24 Harbor Blvd/Victoria St

Cycle (sec):	100	Critical Vol./Cap.(X):	0.897
Loss Time (sec):	0 (Y+R=4.0 sec)	Average Delay (sec/veh):	xxxxxx
Optimal Cycle:	180	Level Of Service:	D

Street Name:	Harbor Boulevard						Victoria Street					
Approach:	North Bound			South Bound			East Bound			West Bound		
Movement:	L - T - R			L - T - R			L - T - R			L - T - R		
Control:	Protected			Protected			Protected			Protected		
Rights:	Include			Ovl			Include			Include		
Min. Green:	0	0	0	0	0	0	0	0	0	0	0	0
Lanes:	1 0 3 0 1			1 0 3 0 1			2 0 1 1 0			2 0 2 0 1		
Volume Module:												
Base Vol:	118	1081	124	142	1116	294	269	639	80	121	1212	159
Growth Adj:	1.07	1.07	1.07	1.07	1.07	1.07	1.07	1.07	1.07	1.07	1.07	1.07
Initial Bse:	126	1159	133	152	1196	315	288	685	86	130	1299	170
Added Vol:	3	100	16	6	139	19	10	65	5	27	122	3
Committed P:	0	0	0	0	0	0	0	0	0	0	0	0
Initial Fut:	129	1259	149	158	1335	334	298	750	91	157	1421	173
User Adj:	1.00	1.00	1.00	1.00	1.00	1.00	1.00	1.00	1.00	1.00	1.00	1.00
PHF Adj:	1.00	1.00	1.00	1.00	1.00	1.00	1.00	1.00	1.00	1.00	1.00	1.00
PHF Volume:	129	1259	149	158	1335	334	298	750	91	157	1421	173
Reduct Vol:	0	0	0	0	0	0	0	0	0	0	0	0
Reduced Vol:	129	1259	149	158	1335	334	298	750	91	157	1421	173
PCE Adj:	1.00	1.00	1.00	1.00	1.00	1.00	1.00	1.00	1.00	1.00	1.00	1.00
MLF Adj:	1.00	1.00	1.00	1.00	1.00	1.00	1.00	1.00	1.00	1.00	1.00	1.00
FinalVolume:	129	1259	149	158	1335	334	298	750	91	157	1421	173
OvlAdjVol:						185						
Saturation Flow Module:												
Sat/Lane:	1600	1600	1600	1600	1600	1600	1600	1600	1600	1600	1600	1600
Adjustment:	1.00	1.00	1.00	1.00	1.00	1.00	1.00	1.00	1.00	1.00	1.00	1.00
Lanes:	1.00	3.00	1.00	1.00	3.00	1.00	2.00	1.78	0.22	2.00	2.00	1.00
Final Sat.:	1600	4800	1600	1600	4800	1600	3200	2855	345	3200	3200	1600
Capacity Analysis Module:												
Vol/Sat:	0.08	0.26	0.09	0.10	0.28	0.21	0.09	0.26	0.26	0.05	0.44	0.11
OvlAdjV/S:						0.12						
Crit Moves:	****				****		****				****	

Newport Banning Ranch
Year 2016 Cumulative Conditions with Project Bluff Road Alternative
PM Peak Hour

Level Of Service Computation Report
ICU 1(Loss as Cycle Length %) Method (Future Volume Alternative)

Intersection #25 Newport Blvd/Victoria St [Ramp]

Cycle (sec): 120 Critical Vol./Cap.(X): 0.507
Loss Time (sec): 0 (Y+R=4.0 sec) Average Delay (sec/veh): xxxxxx
Optimal Cycle: 38 Level Of Service: A

Street Name:	Newport Boulevard						Victoria Street					
Approach:	North Bound			South Bound			East Bound			West Bound		
Movement:	L - T - R			L - T - R			L - T - R			L - T - R		
Control:	Permitted			Permitted			Protected			Protected		
Rights:	Include			Ignore			Include			Include		
Min. Green:	0	0	0	0	0	0	0	0	0	0	0	0
Lanes:	0 0 0 0 0			1 1 2 0 1			0 0 2 1 0			1 0 1 0 0		
Volume Module:												
Base Vol:	0	0	0	590	911	1230	0	765	36	77	233	0
Growth Adj:	1.07	1.07	1.07	1.07	1.07	1.07	1.07	1.07	1.07	1.07	1.07	1.07
Initial Bse:	0	0	0	632	977	1319	0	820	39	83	250	0
Added Vol:	0	0	0	46	0	159	0	85	0	0	0	0
Committed P:	0	0	0	0	0	0	0	0	0	0	0	0
Initial Fut:	0	0	0	678	977	1478	0	905	39	83	250	0
User Adj:	1.00	1.00	1.00	1.00	1.00	0.00	1.00	1.00	1.00	1.00	1.00	1.00
PHF Adj:	1.00	1.00	1.00	1.00	1.00	0.00	1.00	1.00	1.00	1.00	1.00	1.00
PHF Volume:	0	0	0	678	977	0	0	905	39	83	250	0
Reduct Vol:	0	0	0	0	0	0	0	0	0	0	0	0
Reduced Vol:	0	0	0	678	977	0	0	905	39	83	250	0
PCE Adj:	1.00	1.00	1.00	1.00	1.00	0.00	1.00	1.00	1.00	1.00	1.00	1.00
MLF Adj:	1.00	1.00	1.00	1.00	1.00	0.00	1.00	1.00	1.00	1.00	1.00	1.00
FinalVolume:	0	0	0	678	977	0	0	905	39	83	250	0
Saturation Flow Module:												
Sat/Lane:	1600	1600	1600	1600	1600	1600	1600	1600	1600	1600	1600	1600
Adjustment:	1.00	1.00	1.00	1.00	1.00	1.00	1.00	1.00	1.00	1.00	1.00	1.00
Lanes:	0.00	0.00	0.00	1.64	2.36	1.00	0.00	2.88	0.12	1.00	1.00	0.00
Final Sat.:	0	0	0	2624	3776	1600	0	4604	196	1600	1600	0
Capacity Analysis Module:												
Vol/Sat:	0.00	0.00	0.00	0.26	0.26	0.00	0.00	0.20	0.20	0.05	0.16	0.00
Crit Moves:				****				****		****		

Newport Banning Ranch
Year 2016 Cumulative Conditions with Project Bluff Road Alternative
PM Peak Hour

Level Of Service Computation Report
ICU 1(Loss as Cycle Length %) Method (Future Volume Alternative)

Intersection #26 Newport Blvd /Victoria St (22nd St) [Ramp]

Cycle (sec):	120	Critical Vol./Cap.(X):	0.653
Loss Time (sec):	0 (Y+R=4.0 sec)	Average Delay (sec/veh):	xxxxxx
Optimal Cycle:	54	Level Of Service:	B

Street Name:	Newport Boulevard						Victoria Street (22nd Street)					
Approach:	North Bound			South Bound			East Bound			West Bound		
Movement:	L - T - R			L - T - R			L - T - R			L - T - R		
Control:	Permitted			Permitted			Protected			Protected		
Rights:	Include			Include			Include			Include		
Min. Green:	0	0	0	0	0	0	0	0	0	0	0	0
Lanes:	0 1 2	0 1		0 0 0	0 0		2 0 2	0 0		0 0 1	0 1	
Volume Module:												
Base Vol:	109	907	92	0	0	0	734	601	0	0	202	203
Growth Adj:	1.07	1.07	1.07	1.07	1.07	1.07	1.07	1.07	1.07	1.07	1.07	1.07
Initial Bse:	117	972	99	0	0	0	787	644	0	0	217	218
Added Vol:	0	0	0	0	0	0	85	46	0	0	0	28
Committed P:	0	0	0	0	0	0	0	0	0	0	0	0
Initial Fut:	117	972	99	0	0	0	872	690	0	0	217	246
User Adj:	1.00	1.00	1.00	1.00	1.00	1.00	1.00	1.00	1.00	1.00	1.00	1.00
PHF Adj:	1.00	1.00	1.00	1.00	1.00	1.00	1.00	1.00	1.00	1.00	1.00	1.00
PHF Volume:	117	972	99	0	0	0	872	690	0	0	217	246
Reduct Vol:	0	0	0	0	0	0	0	0	0	0	0	0
Reduced Vol:	117	972	99	0	0	0	872	690	0	0	217	246
PCE Adj:	1.00	1.00	1.00	1.00	1.00	1.00	1.00	1.00	1.00	1.00	1.00	1.00
MLF Adj:	1.00	1.00	1.00	1.00	1.00	1.00	1.00	1.00	1.00	1.00	1.00	1.00
FinalVolume:	117	972	99	0	0	0	872	690	0	0	217	246
Saturation Flow Module:												
Sat/Lane:	1600	1600	1600	1600	1600	1600	1600	1600	1600	1600	1600	1600
Adjustment:	1.00	1.00	1.00	1.00	1.00	1.00	1.00	1.00	1.00	1.00	1.00	1.00
Lanes:	0.32	2.68	1.00	0.00	0.00	0.00	2.00	2.00	0.00	0.00	1.00	1.00
Final Sat.:	515	4285	1600	0	0	0	3200	3200	0	0	1600	1600
Capacity Analysis Module:												
Vol/Sat:	0.07	0.23	0.06	0.00	0.00	0.00	0.27	0.22	0.00	0.00	0.14	0.15
Crit Moves:		****					****					****

Newport Banning Ranch
Year 2016 Cumulative Conditions with Project Bluff Road Alternative
PM Peak Hour

Level Of Service Computation Report
2000 HCM 4-Way Stop Method (Future Volume Alternative)

Intersection #27 Whittier Ave/19th St

Cycle (sec):	100	Critical Vol./Cap.(X):	0.290
Loss Time (sec):	0 (Y+R=4.0 sec)	Average Delay (sec/veh):	9.2
Optimal Cycle:	0	Level Of Service:	A

Street Name:	Whittier Avenue						19th St					
Approach:	North Bound			South Bound			East Bound			West Bound		
Movement:	L - T - R			L - T - R			L - T - R			L - T - R		
Control:	Stop Sign			Stop Sign			Stop Sign			Stop Sign		
Rights:	Include			Include			Include			Include		
Min. Green:	0	0	0	0	0	0	0	0	0	0	0	0
Lanes:	0 0	1! 0	0	0 1	0 0	0	1 0	0 1	0	1 0	0 1	0
Volume Module:												
Base Vol:	32	6	175	17	4	0	1	66	11	146	97	18
Growth Adj:	1.07	1.07	1.07	1.07	1.07	1.07	1.07	1.07	1.07	1.07	1.07	1.07
Initial Bse:	34	6	188	18	4	0	1	71	12	157	104	19
Added Vol:	0	0	0	0	0	0	0	0	0	0	0	0
Committed P:	0	0	0	0	0	0	0	0	0	0	0	0
Initial Fut:	34	6	188	18	4	0	1	71	12	157	104	19
User Adj:	1.00	1.00	1.00	1.00	1.00	1.00	1.00	1.00	1.00	1.00	1.00	1.00
PHF Adj:	1.00	1.00	1.00	1.00	1.00	1.00	1.00	1.00	1.00	1.00	1.00	1.00
PHF Volume:	34	6	188	18	4	0	1	71	12	157	104	19
Reduct Vol:	0	0	0	0	0	0	0	0	0	0	0	0
Reduced Vol:	34	6	188	18	4	0	1	71	12	157	104	19
PCE Adj:	1.00	1.00	1.00	1.00	1.00	1.00	1.00	1.00	1.00	1.00	1.00	1.00
MLF Adj:	1.00	1.00	1.00	1.00	1.00	1.00	1.00	1.00	1.00	1.00	1.00	1.00
FinalVolume:	34	6	188	18	4	0	1	71	12	157	104	19
Saturation Flow Module:												
Adjustment:	1.00	1.00	1.00	1.00	1.00	1.00	1.00	1.00	1.00	1.00	1.00	1.00
Lanes:	0.15	0.03	0.82	0.81	0.19	0.00	1.00	0.86	0.14	1.00	0.84	0.16
Final Sat.:	118	22	647	521	123	0	588	560	93	620	583	108
Capacity Analysis Module:												
Vol/Sat:	0.29	0.29	0.29	0.03	0.03	xxxx	0.00	0.13	0.13	0.25	0.18	0.18
Crit Moves:		****			****			****			****	
Delay/Veh:	9.0	9.0	9.0	8.4	8.4	0.0	8.6	8.7	8.7	10.2	8.8	8.8
Delay Adj:	1.00	1.00	1.00	1.00	1.00	1.00	1.00	1.00	1.00	1.00	1.00	1.00
AdjDel/Veh:	9.0	9.0	9.0	8.4	8.4	0.0	8.6	8.7	8.7	10.2	8.8	8.8
LOS by Move:	A	A	A	A	A	*	A	A	A	B	A	A
ApproachDel:		9.0			8.4			8.7			9.6	
Delay Adj:		1.00			1.00			1.00			1.00	
ApprAdjDel:		9.0			8.4			8.7			9.6	
LOS by Appr:		A			A			A			A	
AllWayAvgQ:	0.4	0.4	0.4	0.0	0.0	0.0	0.0	0.1	0.1	0.3	0.2	0.2

Newport Banning Ranch
Year 2016 Cumulative Conditions with Project Bluff Road Alternative
PM Peak Hour

Note: Queue reported is the number of cars per lane.

Newport Banning Ranch
Year 2016 Cumulative Conditions with Project Bluff Road Alternative
PM Peak Hour

Level Of Service Computation Report
2000 HCM 4-Way Stop Method (Future Volume Alternative)

Intersection #28 Monrovia Ave/19th St

Cycle (sec):	100	Critical Vol./Cap.(X):	0.558
Loss Time (sec):	0 (Y+R=4.0 sec)	Average Delay (sec/veh):	14.5
Optimal Cycle:	0	Level Of Service:	B

Street Name:	Monrovia Avenue						19th Street					
Approach:	North Bound			South Bound			East Bound			West Bound		
Movement:	L -	T -	R	L -	T -	R	L -	T -	R	L -	T -	R
Control:	Stop Sign			Stop Sign			Stop Sign			Stop Sign		
Rights:	Include			Include			Include			Include		
Min. Green:	0	0	0	0	0	0	0	0	0	0	0	0
Lanes:	0 1	0 0	1	0 0	1!	0 0	1 0	1 0	1	1 0	1 0	1
Volume Module:												
Base Vol:	14	25	243	50	9	3	6	259	9	124	255	50
Growth Adj:	1.07	1.07	1.07	1.07	1.07	1.07	1.07	1.07	1.07	1.07	1.07	1.07
Initial Bse:	15	27	260	54	10	3	6	278	10	133	273	54
Added Vol:	0	13	11	0	13	0	0	0	0	9	0	0
Committed P:	0	0	0	0	0	0	0	0	0	0	0	0
Initial Fut:	15	40	271	54	23	3	6	278	10	142	273	54
User Adj:	1.00	1.00	1.00	1.00	1.00	1.00	1.00	1.00	1.00	1.00	1.00	1.00
PHF Adj:	1.00	1.00	1.00	1.00	1.00	1.00	1.00	1.00	1.00	1.00	1.00	1.00
PHF Volume:	15	40	271	54	23	3	6	278	10	142	273	54
Reduct Vol:	0	0	0	0	0	0	0	0	0	0	0	0
Reduced Vol:	15	40	271	54	23	3	6	278	10	142	273	54
PCE Adj:	1.00	1.00	1.00	1.00	1.00	1.00	1.00	1.00	1.00	1.00	1.00	1.00
MLF Adj:	1.00	1.00	1.00	1.00	1.00	1.00	1.00	1.00	1.00	1.00	1.00	1.00
FinalVolume:	15	40	271	54	23	3	6	278	10	142	273	54
Saturation Flow Module:												
Adjustment:	1.00	1.00	1.00	1.00	1.00	1.00	1.00	1.00	1.00	1.00	1.00	1.00
Lanes:	0.27	0.73	1.00	0.67	0.29	0.04	1.00	1.00	1.00	1.00	1.00	1.00
Final Sat.:	136	359	566	301	127	18	458	498	541	486	524	576
Capacity Analysis Module:												
Vol/Sat:	0.11	0.11	0.48	0.18	0.18	0.18	0.01	0.56	0.02	0.29	0.52	0.09
Crit Moves:			****		****			****			****	
Delay/Veh:	10.4	10.4	13.8	11.8	11.8	11.8	10.3	17.5	9.1	12.7	16.0	9.2
Delay Adj:	1.00	1.00	1.00	1.00	1.00	1.00	1.00	1.00	1.00	1.00	1.00	1.00
AdjDel/Veh:	10.4	10.4	13.8	11.8	11.8	11.8	10.3	17.5	9.1	12.7	16.0	9.2
LOS by Move:	B	B	B	B	B	B	B	C	A	B	C	A
ApproachDel:	13.2			11.8			17.1			14.2		
Delay Adj:	1.00			1.00			1.00			1.00		
ApprAdjDel:	13.2			11.8			17.1			14.2		
LOS by Appr:	B			B			C			B		
AllWayAvgQ:	0.1	0.1	0.8	0.2	0.2	0.2	0.0	1.1	0.0	0.4	1.0	0.1

Newport Banning Ranch
Year 2016 Cumulative Conditions with Project Bluff Road Alternative
PM Peak Hour

Note: Queue reported is the number of cars per lane.
****

Newport Banning Ranch
Year 2016 Cumulative Conditions with Project Bluff Road Alternative
PM Peak Hour

Level Of Service Computation Report
ICU 1(Loss as Cycle Length %) Method (Future Volume Alternative)

Intersection #29 Placentia Ave/19th St

Cycle (sec):	100	Critical Vol./Cap.(X):	0.778
Loss Time (sec):	0 (Y+R=4.0 sec)	Average Delay (sec/veh):	xxxxxx
Optimal Cycle:	103	Level Of Service:	C

Street Name:	Placentia Avenue						19th Street					
Approach:	North Bound			South Bound			East Bound			West Bound		
Movement:	L - T - R			L - T - R			L - T - R			L - T - R		
Control:	Protected			Protected			Protected			Protected		
Rights:	Include			Include			Include			Include		
Min. Green:	0	0	0	0	0	0	0	0	0	0	0	0
Lanes:	1 0 2	0 1		1 0 1	1 0		2 0 1	1 0		2 0 2	0 1	
Volume Module:												
Base Vol:	49	863	246	206	565	221	306	600	56	248	405	281
Growth Adj:	1.07	1.07	1.07	1.07	1.07	1.07	1.07	1.07	1.07	1.07	1.07	1.07
Initial Bse:	53	925	264	221	606	237	328	643	60	266	434	301
Added Vol:	0	115	14	0	137	0	0	11	0	24	9	8
Committed P:	1	5	1	0	0	0	0	0	0	0	0	0
Initial Fut:	54	1045	279	221	743	237	328	654	60	290	443	309
User Adj:	1.00	1.00	1.00	1.00	1.00	1.00	1.00	1.00	1.00	1.00	1.00	1.00
PHF Adj:	1.00	1.00	1.00	1.00	1.00	1.00	1.00	1.00	1.00	1.00	1.00	1.00
PHF Volume:	54	1045	279	221	743	237	328	654	60	290	443	309
Reduct Vol:	0	0	0	0	0	0	0	0	0	0	0	0
Reduced Vol:	54	1045	279	221	743	237	328	654	60	290	443	309
PCE Adj:	1.00	1.00	1.00	1.00	1.00	1.00	1.00	1.00	1.00	1.00	1.00	1.00
MLF Adj:	1.00	1.00	1.00	1.00	1.00	1.00	1.00	1.00	1.00	1.00	1.00	1.00
FinalVolume:	54	1045	279	221	743	237	328	654	60	290	443	309
Saturation Flow Module:												
Sat/Lane:	1600	1600	1600	1600	1600	1600	1600	1600	1600	1600	1600	1600
Adjustment:	1.00	1.00	1.00	1.00	1.00	1.00	1.00	1.00	1.00	1.00	1.00	1.00
Lanes:	1.00	2.00	1.00	1.00	1.52	0.48	2.00	1.83	0.17	2.00	2.00	1.00
Final Sat.:	1600	3200	1600	1600	2426	774	3200	2931	269	3200	3200	1600
Capacity Analysis Module:												
Vol/Sat:	0.03	0.33	0.17	0.14	0.31	0.31	0.10	0.22	0.22	0.09	0.14	0.19
Crit Moves:		****		****				****		****		

Newport Banning Ranch
Year 2016 Cumulative Conditions with Project Bluff Road Alternative
PM Peak Hour

Level Of Service Computation Report
ICU 1(Loss as Cycle Length %) Method (Future Volume Alternative)

Intersection #30 Pomona Ave/19th St

Cycle (sec):	100	Critical Vol./Cap.(X):	0.628
Loss Time (sec):	0 (Y+R=4.0 sec)	Average Delay (sec/veh):	xxxxxx
Optimal Cycle:	61	Level Of Service:	B

Street Name:	Pomona Avenue						19th Street					
Approach:	North Bound			South Bound			East Bound			West Bound		
Movement:	L - T - R			L - T - R			L - T - R			L - T - R		
Control:	Protected			Protected			Prot+Permit			Prot+Permit		
Rights:	Include			Include			Include			Include		
Min. Green:	0	0	0	0	0	0	0	0	0	0	0	0
Lanes:	1 0 0 1 0			1 0 0 1 0			1 0 1 1 0			1 0 1 1 0		
Volume Module:												
Base Vol:	50	125	110	63	98	55	40	922	47	127	809	59
Growth Adj:	1.07	1.07	1.07	1.07	1.07	1.07	1.07	1.07	1.07	1.07	1.07	1.07
Initial Bse:	54	134	118	68	105	59	43	988	50	136	867	63
Added Vol:	0	5	5	1	7	0	0	25	0	6	41	0
Committed P:	0	0	0	0	0	0	0	0	0	0	0	0
Initial Fut:	54	139	123	69	112	59	43	1013	50	142	908	63
User Adj:	1.00	1.00	1.00	1.00	1.00	1.00	1.00	1.00	1.00	1.00	1.00	1.00
PHF Adj:	1.00	1.00	1.00	1.00	1.00	1.00	1.00	1.00	1.00	1.00	1.00	1.00
PHF Volume:	54	139	123	69	112	59	43	1013	50	142	908	63
Reduct Vol:	0	0	0	0	0	0	0	0	0	0	0	0
Reduced Vol:	54	139	123	69	112	59	43	1013	50	142	908	63
PCE Adj:	1.00	1.00	1.00	1.00	1.00	1.00	1.00	1.00	1.00	1.00	1.00	1.00
MLF Adj:	1.00	1.00	1.00	1.00	1.00	1.00	1.00	1.00	1.00	1.00	1.00	1.00
FinalVolume:	54	139	123	69	112	59	43	1013	50	142	908	63
Saturation Flow Module:												
Sat/Lane:	1600	1600	1600	1600	1600	1600	1600	1600	1600	1600	1600	1600
Adjustment:	1.00	1.00	1.00	1.00	1.00	1.00	1.00	1.00	1.00	1.00	1.00	1.00
Lanes:	1.00	0.53	0.47	1.00	0.66	0.34	1.00	1.91	0.09	1.00	1.87	0.13
Final Sat.:	1600	849	751	1600	1048	552	1600	3048	152	1600	2992	208
Capacity Analysis Module:												
Vol/Sat:	0.03	0.16	0.16	0.04	0.11	0.11	0.03	0.33	0.33	0.09	0.30	0.30
Crit Moves:		****		****				****		****		

Newport Banning Ranch
Year 2016 Cumulative Conditions with Project Bluff Road Alternative
PM Peak Hour

Level Of Service Computation Report
ICU 1(Loss as Cycle Length %) Method (Future Volume Alternative)

Intersection #31 Anaheim Ave/19th St

Cycle (sec):	100	Critical Vol./Cap.(X):	0.594
Loss Time (sec):	0 (Y+R=4.0 sec)	Average Delay (sec/veh):	xxxxxx
Optimal Cycle:	46	Level Of Service:	A

Street Name:	Anaheim Avenue						19th Street					
Approach:	North Bound			South Bound			East Bound			West Bound		
Movement:	L - T - R			L - T - R			L - T - R			L - T - R		
Control:	Permitted			Permitted			Prot+Permit			Prot+Permit		
Rights:	Include			Include			Include			Include		
Min. Green:	0	0	0	0	0	0	0	0	0	0	0	0
Lanes:	1 0	0 1	0	1 0	0 1	0	1 0	1 1	0	1 0	2 0	1
Volume Module:												
Base Vol:	61	60	97	59	48	26	45	1023	53	118	947	109
Growth Adj:	1.07	1.07	1.07	1.07	1.07	1.07	1.07	1.07	1.07	1.07	1.07	1.07
Initial Bse:	65	64	104	63	51	28	48	1097	57	126	1015	117
Added Vol:	0	0	0	0	0	0	0	32	0	0	52	0
Committed P:	0	0	0	0	0	0	0	0	0	0	0	0
Initial Fut:	65	64	104	63	51	28	48	1129	57	126	1067	117
User Adj:	1.00	1.00	1.00	1.00	1.00	1.00	1.00	1.00	1.00	1.00	1.00	1.00
PHF Adj:	1.00	1.00	1.00	1.00	1.00	1.00	1.00	1.00	1.00	1.00	1.00	1.00
PHF Volume:	65	64	104	63	51	28	48	1129	57	126	1067	117
Reduct Vol:	0	0	0	0	0	0	0	0	0	0	0	0
Reduced Vol:	65	64	104	63	51	28	48	1129	57	126	1067	117
PCE Adj:	1.00	1.00	1.00	1.00	1.00	1.00	1.00	1.00	1.00	1.00	1.00	1.00
MLF Adj:	1.00	1.00	1.00	1.00	1.00	1.00	1.00	1.00	1.00	1.00	1.00	1.00
FinalVolume:	65	64	104	63	51	28	48	1129	57	126	1067	117
Saturation Flow Module:												
Sat/Lane:	1600	1600	1600	1600	1600	1600	1600	1600	1600	1600	1600	1600
Adjustment:	1.00	1.00	1.00	1.00	1.00	1.00	1.00	1.00	1.00	1.00	1.00	1.00
Lanes:	1.00	0.38	0.62	1.00	0.65	0.35	1.00	1.90	0.10	1.00	2.00	1.00
Final Sat.:	1600	611	989	1600	1038	562	1600	3047	153	1600	3200	1600
Capacity Analysis Module:												
Vol/Sat:	0.04	0.11	0.11	0.04	0.05	0.05	0.03	0.37	0.37	0.08	0.33	0.07
Crit Moves:		****		****				****		****		

Newport Banning Ranch
Year 2016 Cumulative Conditions with Project Bluff Road Alternative
PM Peak Hour

Level Of Service Computation Report
ICU 1(Loss as Cycle Length %) Method (Future Volume Alternative)

Intersection #32 Park Ave/19th St

Cycle (sec):	100	Critical Vol./Cap.(X):	0.593
Loss Time (sec):	0 (Y+R=4.0 sec)	Average Delay (sec/veh):	xxxxxx
Optimal Cycle:	46	Level Of Service:	A

Street Name:	Park Avenue						19th St					
Approach:	North Bound			South Bound			East Bound			West Bound		
Movement:	L - T - R			L - T - R			L - T - R			L - T - R		
Control:	Permitted			Permitted			Prot+Permit			Prot+Permit		
Rights:	Include			Include			Include			Include		
Min. Green:	0	0	0	0	0	0	0	0	0	0	0	0
Lanes:	2 0 0 0 1			0 0 0 0 0			1 0 2 0 1			1 0 3 0 0		
Volume Module:												
Base Vol:	119	0	153	0	0	0	20	1069	70	183	1034	0
Growth Adj:	1.07	1.07	1.07	1.07	1.07	1.07	1.07	1.07	1.07	1.07	1.07	1.07
Initial Bse:	128	0	164	0	0	0	21	1146	75	196	1108	0
Added Vol:	0	0	0	0	0	0	0	32	0	0	52	0
Committed P:	0	0	0	0	0	0	0	0	0	0	0	0
Initial Fut:	128	0	164	0	0	0	21	1178	75	196	1160	0
User Adj:	1.00	1.00	1.00	1.00	1.00	1.00	1.00	1.00	1.00	1.00	1.00	1.00
PHF Adj:	1.00	1.00	1.00	1.00	1.00	1.00	1.00	1.00	1.00	1.00	1.00	1.00
PHF Volume:	128	0	164	0	0	0	21	1178	75	196	1160	0
Reduct Vol:	0	0	0	0	0	0	0	0	0	0	0	0
Reduced Vol:	128	0	164	0	0	0	21	1178	75	196	1160	0
PCE Adj:	1.00	1.00	1.00	1.00	1.00	1.00	1.00	1.00	1.00	1.00	1.00	1.00
MLF Adj:	1.00	1.00	1.00	1.00	1.00	1.00	1.00	1.00	1.00	1.00	1.00	1.00
FinalVolume:	128	0	164	0	0	0	21	1178	75	196	1160	0
Saturation Flow Module:												
Sat/Lane:	1600	1600	1600	1600	1600	1600	1600	1600	1600	1600	1600	1600
Adjustment:	1.00	1.00	1.00	1.00	1.00	1.00	1.00	1.00	1.00	1.00	1.00	1.00
Lanes:	2.00	0.00	1.00	0.00	0.00	0.00	1.00	2.00	1.00	1.00	3.00	0.00
Final Sat.:	3200	0	1600	0	0	0	1600	3200	1600	1600	4800	0
Capacity Analysis Module:												
Vol/Sat:	0.04	0.00	0.10	0.00	0.00	0.00	0.01	0.37	0.05	0.12	0.24	0.00
Crit Moves:			****					****		****		

Newport Banning Ranch
Year 2016 Cumulative Conditions with Project Bluff Road Alternative
PM Peak Hour

Level Of Service Computation Report
ICU 1(Loss as Cycle Length %) Method (Future Volume Alternative)

Intersection #33 Harbor Blvd/19th St

Cycle (sec):	100	Critical Vol./Cap.(X):	0.643
Loss Time (sec):	0 (Y+R=4.0 sec)	Average Delay (sec/veh):	xxxxxx
Optimal Cycle:	64	Level Of Service:	B

Street Name:	Harbor Boulevard						19th Street					
Approach:	North Bound			South Bound			East Bound			West Bound		
Movement:	L - T - R			L - T - R			L - T - R			L - T - R		
Control:	Protected			Protected			Protected			Protected		
Rights:	Include			Include			Include			Include		
Min. Green:	0	0	0	0	0	0	0	0	0	0	0	0
Lanes:	1 0 2	1 0		1 0 2	0 1		2 0 2	1 0		1 0 3	0 1	
Volume Module:												
Base Vol:	75	453	23	183	614	317	481	749	65	188	791	215
Growth Adj:	1.06	1.06	1.06	1.06	1.06	1.06	1.06	1.06	1.06	1.06	1.06	1.06
Initial Bse:	80	481	24	194	652	336	511	795	69	200	840	228
Added Vol:	10	73	0	3	94	40	30	1	2	0	2	5
Committed P:	3	11	0	0	24	0	0	0	6	0	0	0
Initial Fut:	93	565	24	197	770	376	541	796	77	200	842	233
User Adj:	1.00	1.00	1.00	1.00	1.00	1.00	1.00	1.00	1.00	1.00	1.00	1.00
PHF Adj:	1.00	1.00	1.00	1.00	1.00	1.00	1.00	1.00	1.00	1.00	1.00	1.00
PHF Volume:	93	565	24	197	770	376	541	796	77	200	842	233
Reduct Vol:	0	0	0	0	0	0	0	0	0	0	0	0
Reduced Vol:	93	565	24	197	770	376	541	796	77	200	842	233
PCE Adj:	1.00	1.00	1.00	1.00	1.00	1.00	1.00	1.00	1.00	1.00	1.00	1.00
MLF Adj:	1.00	1.00	1.00	1.00	1.00	1.00	1.00	1.00	1.00	1.00	1.00	1.00
FinalVolume:	93	565	24	197	770	376	541	796	77	200	842	233
Saturation Flow Module:												
Sat/Lane:	1600	1600	1600	1600	1600	1600	1600	1600	1600	1600	1600	1600
Adjustment:	1.00	1.00	1.00	1.00	1.00	1.00	1.00	1.00	1.00	1.00	1.00	1.00
Lanes:	1.00	2.88	0.12	1.00	2.00	1.00	2.00	2.74	0.26	1.00	3.00	1.00
Final Sat.:	1600	4601	199	1600	3200	1600	3200	4377	423	1600	4800	1600
Capacity Analysis Module:												
Vol/Sat:	0.06	0.12	0.12	0.12	0.24	0.24	0.17	0.18	0.18	0.12	0.18	0.15
Crit Moves:	****				****		****				****	

Newport Banning Ranch
Year 2016 Cumulative Conditions with Project Bluff Road Alternative
PM Peak Hour

Level Of Service Computation Report
ICU 1(Loss as Cycle Length %) Method (Future Volume Alternative)

Intersection #34 Newport Blvd/19th St

Cycle (sec):	120	Critical Vol./Cap.(X):	0.879
Loss Time (sec):	0 (Y+R=4.0 sec)	Average Delay (sec/veh):	xxxxxx
Optimal Cycle:	180	Level Of Service:	D

Street Name:	Newport Boulevard						19th Street					
Approach:	North Bound			South Bound			East Bound			West Bound		
Movement:	L - T - R			L - T - R			L - T - R			L - T - R		
Control:	Protected			Protected			Split Phase			Split Phase		
Rights:	Include			Include			Include			Include		
Min. Green:	0	0	0	0	0	0	0	0	0	0	0	0
Lanes:	1 0 3	1 0		1 0 3	1 1		2 1	1 0	1	1 0 2	1 1	
Volume Module:												
Base Vol:	65	2649	38	202	3114	757	731	171	33	54	321	152
Growth Adj:	1.07	1.07	1.07	1.07	1.07	1.07	1.07	1.07	1.07	1.07	1.07	1.07
Initial Bse:	70	2840	41	217	3338	812	784	183	35	58	344	163
Added Vol:	0	292	9	0	416	2	1	3	0	0	5	0
Committed P:	0	21	0	0	31	0	0	0	11	0	0	0
Initial Fut:	70	3153	50	217	3785	814	785	186	46	58	349	163
User Adj:	1.00	1.00	1.00	1.00	1.00	1.00	1.00	1.00	1.00	1.00	1.00	1.00
PHF Adj:	1.00	1.00	1.00	1.00	1.00	1.00	1.00	1.00	1.00	1.00	1.00	1.00
PHF Volume:	70	3153	50	217	3785	814	785	186	46	58	349	163
Reduct Vol:	0	0	0	0	0	0	0	0	0	0	0	0
Reduced Vol:	70	3153	50	217	3785	814	785	186	46	58	349	163
PCE Adj:	1.00	1.00	1.00	1.00	1.00	1.00	1.00	1.00	1.00	1.00	1.00	1.00
MLF Adj:	1.00	1.00	1.00	1.00	1.00	1.00	1.00	1.00	1.00	1.00	1.00	1.00
FinalVolume:	70	3153	50	217	3785	814	785	186	46	58	349	163
Saturation Flow Module:												
Sat/Lane:	1600	1600	1600	1600	1600	1600	1600	1600	1600	1600	1600	1600
Adjustment:	1.00	1.00	1.00	1.00	1.00	1.00	1.00	1.00	1.00	1.00	1.00	1.00
Lanes:	1.00	3.94	0.06	1.00	4.00	1.00	3.00	1.00	1.00	1.00	2.73	1.27
Final Sat.:	1600	6301	99	1600	6400	1600	4800	1600	1600	1600	4363	2037
Capacity Analysis Module:												
Vol/Sat:	0.04	0.50	0.50	0.14	0.59	0.51	0.16	0.12	0.03	0.04	0.08	0.08
Crit Moves:		****		****			****				****	

Newport Banning Ranch
Year 2016 Cumulative Conditions with Project Bluff Road Alternative
PM Peak Hour

Level Of Service Computation Report
ICU 1(Loss as Cycle Length %) Method (Future Volume Alternative)

Intersection #35 Newport Blvd/Broadway

Cycle (sec):	120	Critical Vol./Cap.(X):	0.878
Loss Time (sec):	0 (Y+R=4.0 sec)	Average Delay (sec/veh):	xxxxxx
Optimal Cycle:	152	Level Of Service:	D

Street Name:	Newport Boulevard									Broadway								
Approach:	North Bound					South Bound				East Bound					West Bound			
Movement:	L	-	T	-	R	L	-	T	- R	L	-	T	-	R	L	-	T	- R
Control:	Protected					Protected				Permitted					Permitted			
Rights:	Include					Include				Include					Include			
Min. Green:	0	0	0			0	0	0		0	0	0			0	0	0	
Lanes:	1	0	3	1	0	1	0	3	0 1	0	1	0	0	1	1	0	0	1 0
Volume Module:																		
Base Vol:	7	2542	55	142	3061	62	18	23	14	33	15	95						
Growth Adj:	1.07	1.07	1.07	1.07	1.07	1.07	1.07	1.07	1.07	1.07	1.07	1.07						
Initial Bse:	8	2725	59	152	3281	66	19	25	15	35	16	102						
Added Vol:	2	292	0	0	416	0	9	0	2	0	0	0						
Committed P:	0	25	0	0	48	0	0	0	0	0	0	0						
Initial Fut:	10	3042	59	152	3745	66	28	25	17	35	16	102						
User Adj:	1.00	1.00	1.00	1.00	1.00	1.00	1.00	1.00	1.00	1.00	1.00	1.00						
PHF Adj:	1.00	1.00	1.00	1.00	1.00	1.00	1.00	1.00	1.00	1.00	1.00	1.00						
PHF Volume:	10	3042	59	152	3745	66	28	25	17	35	16	102						
Reduct Vol:	0	0	0	0	0	0	0	0	0	0	0	0						
Reduced Vol:	10	3042	59	152	3745	66	28	25	17	35	16	102						
PCE Adj:	1.00	1.00	1.00	1.00	1.00	1.00	1.00	1.00	1.00	1.00	1.00	1.00						
MLF Adj:	1.00	1.00	1.00	1.00	1.00	1.00	1.00	1.00	1.00	1.00	1.00	1.00						
FinalVolume:	10	3042	59	152	3745	66	28	25	17	35	16	102						
Saturation Flow Module:																		
Sat/Lane:	1600	1600	1600	1600	1600	1600	1600	1600	1600	1600	1600	1600						
Adjustment:	1.00	1.00	1.00	1.00	1.00	1.00	1.00	1.00	1.00	1.00	1.00	1.00						
Lanes:	1.00	3.92	0.08	1.00	3.00	1.00	0.53	0.47	1.00	1.00	0.14	0.86						
Final Sat.:	1600	6278	122	1600	4800	1600	855	745	1600	1600	218	1382						
Capacity Analysis Module:																		
Vol/Sat:	0.01	0.48	0.48	0.10	0.78	0.04	0.02	0.03	0.01	0.02	0.07	0.07						
Crit Moves:	****				****		****				****							

Newport Banning Ranch
Year 2016 Cumulative Conditions with Project Bluff Road Alternative
PM Peak Hour

Level Of Service Computation Report
ICU 1(Loss as Cycle Length %) Method (Future Volume Alternative)

Intersection #36 Newport Blvd/Harbor Blvd

Cycle (sec):	120	Critical Vol./Cap.(X):	1.169
Loss Time (sec):	0 (Y+R=4.0 sec)	Average Delay (sec/veh):	xxxxxx
Optimal Cycle:	180	Level Of Service:	F

Street Name:	Newport Boulevard						Harbor Boulevard					
Approach:	North Bound			South Bound			East Bound			West Bound		
Movement:	L - T - R			L - T - R			L - T - R			L - T - R		
Control:	Protected			Protected			Protected			Protected		
Rights:	Include			Include			Ovl			Include		
Min. Green:	0	0	0	0	0	0	0	0	0	0	0	0
Lanes:	2 0 4 0 0			0 0 2 1 0			1 0 0 0 2			0 0 0 0 0		
Volume Module:												
Base Vol:	726	2480	0	0	3160	50	123	0	537	0	0	0
Growth Adj:	1.07	1.07	1.07	1.07	1.07	1.07	1.07	1.07	1.07	1.07	1.07	1.07
Initial Bse:	778	2659	0	0	3388	54	132	0	576	0	0	0
Added Vol:	64	294	0	0	419	0	0	0	91	0	0	0
Committed P:	27	28	0	0	51	0	0	0	50	0	0	0
Initial Fut:	869	2981	0	0	3858	54	132	0	717	0	0	0
User Adj:	1.00	1.00	1.00	1.00	1.00	1.00	1.00	1.00	1.00	1.00	1.00	1.00
PHF Adj:	1.00	1.00	1.00	1.00	1.00	1.00	1.00	1.00	1.00	1.00	1.00	1.00
PHF Volume:	869	2981	0	0	3858	54	132	0	717	0	0	0
Reduct Vol:	0	0	0	0	0	0	0	0	0	0	0	0
Reduced Vol:	869	2981	0	0	3858	54	132	0	717	0	0	0
PCE Adj:	1.00	1.00	1.00	1.00	1.00	1.00	1.00	1.00	1.00	1.00	1.00	1.00
MLF Adj:	1.00	1.00	1.00	1.00	1.00	1.00	1.00	1.00	1.00	1.00	1.00	1.00
FinalVolume:	869	2981	0	0	3858	54	132	0	717	0	0	0
OvlAdjVol:									0			
Saturation Flow Module:												
Sat/Lane:	1600	1600	1600	1600	1600	1600	1600	1600	1600	1600	1600	1600
Adjustment:	1.00	1.00	1.00	1.00	1.00	1.00	1.00	1.00	1.00	1.00	1.00	1.00
Lanes:	2.00	4.00	0.00	0.00	2.96	0.04	1.00	0.00	2.00	0.00	0.00	0.00
Final Sat.:	3200	6400	0	0	4734	66	1600	0	3200	0	0	0
Capacity Analysis Module:												
Vol/Sat:	0.27	0.47	0.00	0.00	0.81	0.81	0.08	0.00	0.22	0.00	0.00	0.00
OvlAdjV/S:									0.00			
Crit Moves:	****				****		****					

Newport Banning Ranch
Year 2016 Cumulative Conditions with Project Bluff Road Alternative
PM Peak Hour

Level Of Service Computation Report
ICU 1(Loss as Cycle Length %) Method (Future Volume Alternative)

Intersection #37 Newport Blvd/18th St (Rochester St)

Cycle (sec):	120	Critical Vol./Cap.(X):	1.180
Loss Time (sec):	0 (Y+R=4.0 sec)	Average Delay (sec/veh):	xxxxxx
Optimal Cycle:	180	Level Of Service:	F

Street Name:	Newport Boulevard						18th Street (Rochester Street)					
Approach:	North Bound			South Bound			East Bound			West Bound		
Movement:	L - T - R			L - T - R			L - T - R			L - T - R		
Control:	Protected			Protected			Split Phase			Split Phase		
Rights:	Include			Include			Include			Include		
Min. Green:	0	0	0	0	0	0	0	0	0	0	0	0
Lanes:	1 0 3	1 0		1 0 3	0 1		2 0 1	0 1		1 0 0	1 0	
Volume Module:												
Base Vol:	111	2724	15	125	3515	144	251	75	48	18	124	22
Growth Adj:	1.07	1.07	1.07	1.07	1.07	1.07	1.07	1.07	1.07	1.07	1.07	1.07
Initial Bse:	119	2920	16	134	3768	154	269	80	51	19	133	24
Added Vol:	0	282	0	0	400	109	76	0	0	0	0	0
Committed P:	14	68	0	0	111	0	0	0	21	0	0	0
Initial Fut:	133	3270	16	134	4279	263	345	80	72	19	133	24
User Adj:	1.00	1.00	1.00	1.00	1.00	1.00	1.00	1.00	1.00	1.00	1.00	1.00
PHF Adj:	1.00	1.00	1.00	1.00	1.00	1.00	1.00	1.00	1.00	1.00	1.00	1.00
PHF Volume:	133	3270	16	134	4279	263	345	80	72	19	133	24
Reduct Vol:	0	0	0	0	0	0	0	0	0	0	0	0
Reduced Vol:	133	3270	16	134	4279	263	345	80	72	19	133	24
PCE Adj:	1.00	1.00	1.00	1.00	1.00	1.00	1.00	1.00	1.00	1.00	1.00	1.00
MLF Adj:	1.00	1.00	1.00	1.00	1.00	1.00	1.00	1.00	1.00	1.00	1.00	1.00
FinalVolume:	133	3270	16	134	4279	263	345	80	72	19	133	24
Saturation Flow Module:												
Sat/Lane:	1600	1600	1600	1600	1600	1600	1600	1600	1600	1600	1600	1600
Adjustment:	1.00	1.00	1.00	1.00	1.00	1.00	1.00	1.00	1.00	1.00	1.00	1.00
Lanes:	1.00	3.98	0.02	1.00	3.00	1.00	2.00	1.00	1.00	1.00	0.85	0.15
Final Sat.:	1600	6369	31	1600	4800	1600	3200	1600	1600	1600	1359	241
Capacity Analysis Module:												
Vol/Sat:	0.08	0.51	0.51	0.08	0.89	0.16	0.11	0.05	0.05	0.01	0.10	0.10
Crit Moves:	****				****		****					****

Newport Banning Ranch
Year 2016 Cumulative Conditions with Project Bluff Road Alternative
PM Peak Hour

Level Of Service Computation Report
ICU 1(Loss as Cycle Length %) Method (Future Volume Alternative)

Intersection #38 Placentia Ave/18th St

Cycle (sec):	100	Critical Vol./Cap.(X):	0.601
Loss Time (sec):	0 (Y+R=4.0 sec)	Average Delay (sec/veh):	xxxxxx
Optimal Cycle:	47	Level Of Service:	B

Street Name:	Placentia Avenue						18th Street					
Approach:	North Bound			South Bound			East Bound			West Bound		
Movement:	L - T - R			L - T - R			L - T - R			L - T - R		
Control:	Protected			Protected			Permitted			Permitted		
Rights:	Include			Include			Include			Include		
Min. Green:	0	0	0	0	0	0	0	0	0	0	0	0
Lanes:	1 0 1	1 0		1 0 1	1 0		1 0 0	1 0		1 0 0	1 0	
Volume Module:												
Base Vol:	14	889	58	45	523	47	60	169	27	16	87	80
Growth Adj:	1.07	1.07	1.07	1.07	1.07	1.07	1.07	1.07	1.07	1.07	1.07	1.07
Initial Bse:	15	953	62	48	561	50	64	181	29	17	93	86
Added Vol:	0	88	0	0	59	7	4	76	0	0	109	0
Committed P:	1	10	1	0	1	0	0	0	0	0	0	0
Initial Fut:	16	1051	63	48	621	57	68	257	29	17	202	86
User Adj:	1.00	1.00	1.00	1.00	1.00	1.00	1.00	1.00	1.00	1.00	1.00	1.00
PHF Adj:	1.00	1.00	1.00	1.00	1.00	1.00	1.00	1.00	1.00	1.00	1.00	1.00
PHF Volume:	16	1051	63	48	621	57	68	257	29	17	202	86
Reduct Vol:	0	0	0	0	0	0	0	0	0	0	0	0
Reduced Vol:	16	1051	63	48	621	57	68	257	29	17	202	86
PCE Adj:	1.00	1.00	1.00	1.00	1.00	1.00	1.00	1.00	1.00	1.00	1.00	1.00
MLF Adj:	1.00	1.00	1.00	1.00	1.00	1.00	1.00	1.00	1.00	1.00	1.00	1.00
FinalVolume:	16	1051	63	48	621	57	68	257	29	17	202	86
Saturation Flow Module:												
Sat/Lane:	1600	1600	1600	1600	1600	1600	1600	1600	1600	1600	1600	1600
Adjustment:	1.00	1.00	1.00	1.00	1.00	1.00	1.00	1.00	1.00	1.00	1.00	1.00
Lanes:	1.00	1.89	0.11	1.00	1.83	0.17	1.00	0.90	0.10	1.00	0.70	0.30
Final Sat.:	1600	3019	181	1600	2929	271	1600	1438	162	1600	1124	476
Capacity Analysis Module:												
Vol/Sat:	0.01	0.35	0.35	0.03	0.21	0.21	0.04	0.18	0.18	0.01	0.18	0.18
Crit Moves:		****		****			****				****	

Newport Banning Ranch
Year 2016 Cumulative Conditions with Project Bluff Road Alternative
PM Peak Hour

Level Of Service Computation Report
2000 HCM 4-Way Stop Method (Future Volume Alternative)

Intersection #39 Whittier Ave/17th St

Cycle (sec):	100	Critical Vol./Cap.(X):	0.597
Loss Time (sec):	0 (Y+R=4.0 sec)	Average Delay (sec/veh):	12.4
Optimal Cycle:	0	Level Of Service:	B

Street Name:	Whittier Avenue						17th St					
Approach:	North Bound			South Bound			East Bound			West Bound		
Movement:	L -	T -	R	L -	T -	R	L -	T -	R	L -	T -	R
Control:	Stop Sign			Stop Sign			Stop Sign			Stop Sign		
Rights:	Include			Include			Include			Include		
Min. Green:	0	0	0	0	0	0	0	0	0	0	0	0
Lanes:	0 0	0 1	0	0 0	1! 0	0	0 1	0 0	0	0 0	1! 0	0
Volume Module:												
Base Vol:	0	11	8	62	9	3	2	14	0	14	9	83
Growth Adj:	1.07	1.07	1.07	1.07	1.07	1.07	1.07	1.07	1.07	1.07	1.07	1.07
Initial Bse:	0	12	9	66	10	3	2	15	0	15	10	89
Added Vol:	0	0	0	0	0	94	66	212	0	0	335	0
Committed P:	0	0	0	0	0	0	0	0	0	0	0	0
Initial Fut:	0	12	9	66	10	97	68	227	0	15	345	89
User Adj:	1.00	1.00	1.00	1.00	1.00	1.00	1.00	1.00	1.00	1.00	1.00	1.00
PHF Adj:	1.00	1.00	1.00	1.00	1.00	1.00	1.00	1.00	1.00	1.00	1.00	1.00
PHF Volume:	0	12	9	66	10	97	68	227	0	15	345	89
Reduct Vol:	0	0	0	0	0	0	0	0	0	0	0	0
Reduced Vol:	0	12	9	66	10	97	68	227	0	15	345	89
PCE Adj:	1.00	1.00	1.00	1.00	1.00	1.00	1.00	1.00	1.00	1.00	1.00	1.00
MLF Adj:	1.00	1.00	1.00	1.00	1.00	1.00	1.00	1.00	1.00	1.00	1.00	1.00
FinalVolume:	0	12	9	66	10	97	68	227	0	15	345	89
Saturation Flow Module:												
Adjustment:	1.00	1.00	1.00	1.00	1.00	1.00	1.00	1.00	1.00	1.00	1.00	1.00
Lanes:	0.00	0.58	0.42	0.38	0.06	0.56	0.23	0.77	0.00	0.03	0.77	0.20
Final Sat.:	0	314	229	236	34	345	161	536	0	25	578	149
Capacity Analysis Module:												
Vol/Sat:	xxxx	0.04	0.04	0.28	0.28	0.28	0.42	0.42	xxxx	0.60	0.60	0.60
Crit Moves:			****		****			****			****	
Delay/Veh:	0.0	8.8	8.8	10.2	10.2	10.2	11.4	11.4	0.0	14.0	14.0	14.0
Delay Adj:	1.00	1.00	1.00	1.00	1.00	1.00	1.00	1.00	1.00	1.00	1.00	1.00
AdjDel/Veh:	0.0	8.8	8.8	10.2	10.2	10.2	11.4	11.4	0.0	14.0	14.0	14.0
LOS by Move:	*	A	A	B	B	B	B	B	*	B	B	B
ApproachDel:		8.8			10.2			11.4			14.0	
Delay Adj:		1.00			1.00			1.00			1.00	
ApprAdjDel:		8.8			10.2			11.4			14.0	
LOS by Appr:		A			B			B			B	
AllWayAvgQ:	0.0	0.0	0.0	0.3	0.3	0.3	0.7	0.7	0.7	1.3	1.3	1.3

Newport Banning Ranch
Year 2016 Cumulative Conditions with Project Bluff Road Alternative
PM Peak Hour

Note: Queue reported is the number of cars per lane.
****

Newport Banning Ranch
Year 2016 Cumulative Conditions with Project Bluff Road Alternative
PM Peak Hour

Level Of Service Computation Report
2000 HCM 4-Way Stop Method (Future Volume Alternative)

Intersection #40 Monrovia Ave/17th St

Cycle (sec):	100	Critical Vol./Cap.(X):	0.860
Loss Time (sec):	0 (Y+R=4.0 sec)	Average Delay (sec/veh):	24.8
Optimal Cycle:	0	Level Of Service:	C

Street Name:	Monrovia Avenue						17th Street					
Approach:	North Bound			South Bound			East Bound			West Bound		
Movement:	L -	T -	R	L -	T -	R	L -	T -	R	L -	T -	R
Control:	Stop Sign			Stop Sign			Stop Sign			Stop Sign		
Rights:	Include			Include			Include			Include		
Min. Green:	0	0	0	0	0	0	0	0	0	0	0	0
Lanes:	0 0	1! 0	0	0 0	1! 0	0	0 0	1! 0	0	0 0	1! 0	0
Volume Module:												
Base Vol:	25	120	46	43	65	12	14	79	43	21	77	47
Growth Adj:	1.07	1.07	1.07	1.07	1.07	1.07	1.07	1.07	1.07	1.07	1.07	1.07
Initial Bse:	27	129	49	46	70	13	15	85	46	23	83	50
Added Vol:	0	47	50	-21	77	63	24	188	0	40	272	-8
Committed P:	0	0	0	0	0	0	0	0	0	0	0	0
Initial Fut:	27	176	99	25	147	76	39	273	46	63	355	42
User Adj:	1.00	1.00	1.00	1.00	1.00	1.00	1.00	1.00	1.00	1.00	1.00	1.00
PHF Adj:	1.00	1.00	1.00	1.00	1.00	1.00	1.00	1.00	1.00	1.00	1.00	1.00
PHF Volume:	27	176	99	25	147	76	39	273	46	63	355	42
Reduct Vol:	0	0	0	0	0	0	0	0	0	0	0	0
Reduced Vol:	27	176	99	25	147	76	39	273	46	63	355	42
PCE Adj:	1.00	1.00	1.00	1.00	1.00	1.00	1.00	1.00	1.00	1.00	1.00	1.00
MLF Adj:	1.00	1.00	1.00	1.00	1.00	1.00	1.00	1.00	1.00	1.00	1.00	1.00
FinalVolume:	27	176	99	25	147	76	39	273	46	63	355	42
Saturation Flow Module:												
Adjustment:	1.00	1.00	1.00	1.00	1.00	1.00	1.00	1.00	1.00	1.00	1.00	1.00
Lanes:	0.09	0.58	0.33	0.10	0.59	0.31	0.11	0.76	0.13	0.14	0.77	0.09
Final Sat.:	42	274	155	46	266	138	55	382	65	73	412	49
Capacity Analysis Module:												
Vol/Sat:	0.64	0.64	0.64	0.55	0.55	0.55	0.71	0.71	0.71	0.86	0.86	0.86
Crit Moves:	****				****			****			****	
Delay/Veh:	19.1	19.1	19.1	16.7	16.7	16.7	22.4	22.4	22.4	34.6	34.6	34.6
Delay Adj:	1.00	1.00	1.00	1.00	1.00	1.00	1.00	1.00	1.00	1.00	1.00	1.00
AdjDel/Veh:	19.1	19.1	19.1	16.7	16.7	16.7	22.4	22.4	22.4	34.6	34.6	34.6
LOS by Move:	C	C	C	C	C	C	C	C	C	D	D	D
ApproachDel:	19.1			16.7			22.4			34.6		
Delay Adj:	1.00			1.00			1.00			1.00		
ApprAdjDel:	19.1			16.7			22.4			34.6		
LOS by Appr:	C			C			C			D		
AllWayAvgQ:	1.2	1.2	1.2	0.8	0.8	0.8	1.8	1.8	1.8	3.7	3.7	3.7

Newport Banning Ranch
Year 2016 Cumulative Conditions with Project Bluff Road Alternative
PM Peak Hour

Note: Queue reported is the number of cars per lane.
****

Newport Banning Ranch
Year 2016 Cumulative Conditions with Project Bluff Road Alternative
PM Peak Hour

Level Of Service Computation Report
ICU 1(Loss as Cycle Length %) Method (Future Volume Alternative)

Intersection #41 Placentia Ave/17th St

Cycle (sec):	100	Critical Vol./Cap.(X):	0.754
Loss Time (sec):	0 (Y+R=4.0 sec)	Average Delay (sec/veh):	xxxxxx
Optimal Cycle:	58	Level Of Service:	C

Street Name:	Placentia Avenue						17th St					
Approach:	North Bound			South Bound			East Bound			West Bound		
Movement:	L - T - R			L - T - R			L - T - R			L - T - R		
Control:	Permitted			Permitted			Permitted			Permitted		
Rights:	Include			Include			Include			Include		
Min. Green:	0	0	0	0	0	0	0	0	0	0	0	0
Lanes:	1 0 1	1 0		1 0 1	1 0		1 0 0	1 0		1 0 0	1 0	
Volume Module:												
Base Vol:	49	668	69	113	387	26	52	151	34	37	108	187
Growth Adj:	1.07	1.07	1.07	1.07	1.07	1.07	1.07	1.07	1.07	1.07	1.07	1.07
Initial Bse:	53	716	74	121	415	28	56	162	36	40	116	200
Added Vol:	-8	12	11	0	-32	91	76	161	-21	6	221	0
Committed P:	4	15	4	0	4	0	0	0	2	0	0	0
Initial Fut:	49	743	89	121	387	119	132	323	17	46	337	200
User Adj:	1.00	1.00	1.00	1.00	1.00	1.00	1.00	1.00	1.00	1.00	1.00	1.00
PHF Adj:	1.00	1.00	1.00	1.00	1.00	1.00	1.00	1.00	1.00	1.00	1.00	1.00
PHF Volume:	49	743	89	121	387	119	132	323	17	46	337	200
Reduct Vol:	0	0	0	0	0	0	0	0	0	0	0	0
Reduced Vol:	49	743	89	121	387	119	132	323	17	46	337	200
PCE Adj:	1.00	1.00	1.00	1.00	1.00	1.00	1.00	1.00	1.00	1.00	1.00	1.00
MLF Adj:	1.00	1.00	1.00	1.00	1.00	1.00	1.00	1.00	1.00	1.00	1.00	1.00
FinalVolume:	49	743	89	121	387	119	132	323	17	46	337	200
Saturation Flow Module:												
Sat/Lane:	1600	1600	1600	1600	1600	1600	1600	1600	1600	1600	1600	1600
Adjustment:	1.00	1.00	1.00	1.00	1.00	1.00	1.00	1.00	1.00	1.00	1.00	1.00
Lanes:	1.00	1.79	0.21	1.00	1.53	0.47	1.00	0.95	0.05	1.00	0.63	0.37
Final Sat.:	1600	2858	342	1600	2448	752	1600	1518	82	1600	1003	597
Capacity Analysis Module:												
Vol/Sat:	0.03	0.26	0.26	0.08	0.16	0.16	0.08	0.21	0.21	0.03	0.34	0.34
Crit Moves:		****		****			****				****	

Newport Banning Ranch
Year 2016 Cumulative Conditions with Project Bluff Road Alternative
PM Peak Hour

Level Of Service Computation Report
2000 HCM 4-Way Stop Method (Future Volume Alternative)

Intersection #42 Pomona Ave/17th St

Cycle (sec): 100 Critical Vol./Cap.(X): 1.094
Loss Time (sec): 0 (Y+R=4.0 sec) Average Delay (sec/veh): 58.4
Optimal Cycle: 0 Level Of Service: F

Street Name:	Pomona Avenue						17th Street					
Approach:	North Bound			South Bound			East Bound			West Bound		
Movement:	L -	T -	R	L -	T -	R	L -	T -	R	L -	T -	R
Control:	Stop Sign			Stop Sign			Stop Sign			Stop Sign		
Rights:	Include			Include			Include			Include		
Min. Green:	0	0	0	0	0	0	0	0	0	0	0	0
Lanes:	0 0	1! 0	0	0 0	1! 0	0	1 0	0 1	0	1 0	1 0	1
Volume Module:												
Base Vol:	20	130	53	65	86	32	52	308	16	43	297	102
Growth Adj:	1.07	1.07	1.07	1.07	1.07	1.07	1.07	1.07	1.07	1.07	1.07	1.07
Initial Bse:	21	139	57	70	92	34	56	330	17	46	318	109
Added Vol:	0	0	0	12	0	0	0	164	0	0	230	10
Committed P:	0	0	0	0	0	0	0	0	0	0	0	0
Initial Fut:	21	139	57	82	92	34	56	494	17	46	548	119
User Adj:	1.00	1.00	1.00	1.00	1.00	1.00	1.00	1.00	1.00	1.00	1.00	1.00
PHF Adj:	1.00	1.00	1.00	1.00	1.00	1.00	1.00	1.00	1.00	1.00	1.00	1.00
PHF Volume:	21	139	57	82	92	34	56	494	17	46	548	119
Reduct Vol:	0	0	0	0	0	0	0	0	0	0	0	0
Reduced Vol:	21	139	57	82	92	34	56	494	17	46	548	119
PCE Adj:	1.00	1.00	1.00	1.00	1.00	1.00	1.00	1.00	1.00	1.00	1.00	1.00
MLF Adj:	1.00	1.00	1.00	1.00	1.00	1.00	1.00	1.00	1.00	1.00	1.00	1.00
FinalVolume:	21	139	57	82	92	34	56	494	17	46	548	119
Saturation Flow Module:												
Adjustment:	1.00	1.00	1.00	1.00	1.00	1.00	1.00	1.00	1.00	1.00	1.00	1.00
Lanes:	0.10	0.64	0.26	0.39	0.45	0.16	1.00	0.97	0.03	1.00	1.00	1.00
Final Sat.:	45	291	119	175	198	74	463	480	17	469	501	555
Capacity Analysis Module:												
Vol/Sat:	0.48	0.48	0.48	0.47	0.47	0.47	0.12	1.03	1.03	0.10	1.09	0.21
Crit Moves:		****		****				****			****	
Delay/Veh:	17.4	17.4	17.4	17.4	17.4	17.4	11.5	74.8	74.8	11.2	94.1	10.9
Delay Adj:	1.00	1.00	1.00	1.00	1.00	1.00	1.00	1.00	1.00	1.00	1.00	1.00
AdjDel/Veh:	17.4	17.4	17.4	17.4	17.4	17.4	11.5	74.8	74.8	11.2	94.1	10.9
LOS by Move:	C	C	C	C	C	C	B	F	F	B	F	B
ApproachDel:		17.4			17.4			68.6			74.9	
Delay Adj:		1.00			1.00			1.00			1.00	
ApprAdjDel:		17.4			17.4			68.6			74.9	
LOS by Appr:		C			C			F			F	
AllWayAvgQ:	0.8	0.8	0.8	0.8	0.8	0.8	0.1	9.0	9.0	0.1	11.7	0.3

Newport Banning Ranch
Year 2016 Cumulative Conditions with Project Bluff Road Alternative
PM Peak Hour

Note: Queue reported is the number of cars per lane.

Newport Banning Ranch
Year 2016 Cumulative Conditions with Project Bluff Road Alternative
PM Peak Hour

Level Of Service Computation Report
ICU 1(Loss as Cycle Length %) Method (Future Volume Alternative)

Intersection #43 Superior Ave/17th St

Cycle (sec):	100	Critical Vol./Cap.(X):	1.015
Loss Time (sec):	0 (Y+R=4.0 sec)	Average Delay (sec/veh):	xxxxxx
Optimal Cycle:	180	Level Of Service:	F

Street Name:	Superior Avenue						17th Street					
Approach:	North Bound			South Bound			East Bound			West Bound		
Movement:	L - T - R			L - T - R			L - T - R			L - T - R		
Control:	Prot+Permit			Prot+Permit			Prot+Permit			Prot+Permit		
Rights:	Include			Include			Include			Include		
Min. Green:	0	0	0	0	0	0	0	0	0	0	0	0
Lanes:	1 0 0 1 1			1 0 1 1 0			1 0 1 1 0			1 0 1 1 0		
Volume Module:												
Base Vol:	100	184	620	89	287	84	25	497	65	423	436	81
Growth Adj:	1.07	1.07	1.07	1.07	1.07	1.07	1.07	1.07	1.07	1.07	1.07	1.07
Initial Bse:	107	197	665	95	308	90	27	533	70	453	467	87
Added Vol:	0	6	118	0	15	0	0	164	0	181	230	0
Committed P:	3	25	0	0	101	0	0	0	11	0	0	0
Initial Fut:	110	228	783	95	424	90	27	697	81	634	697	87
User Adj:	1.00	1.00	1.00	1.00	1.00	1.00	1.00	1.00	1.00	1.00	1.00	1.00
PHF Adj:	1.00	1.00	1.00	1.00	1.00	1.00	1.00	1.00	1.00	1.00	1.00	1.00
PHF Volume:	110	228	783	95	424	90	27	697	81	634	697	87
Reduct Vol:	0	0	0	0	0	0	0	0	0	0	0	0
Reduced Vol:	110	228	783	95	424	90	27	697	81	634	697	87
PCE Adj:	1.00	1.00	1.00	1.00	1.00	1.00	1.00	1.00	1.00	1.00	1.00	1.00
MLF Adj:	1.00	1.00	1.00	1.00	1.00	1.00	1.00	1.00	1.00	1.00	1.00	1.00
FinalVolume:	110	228	783	95	424	90	27	697	81	634	697	87
Saturation Flow Module:												
Sat/Lane:	1600	1600	1600	1600	1600	1600	1600	1600	1600	1600	1600	1600
Adjustment:	1.00	1.00	1.00	1.00	1.00	1.00	1.00	1.00	1.00	1.00	1.00	1.00
Lanes:	1.00	0.45	1.55	1.00	1.65	0.35	1.00	1.79	0.21	1.00	1.78	0.22
Final Sat.:	1600	723	2477	1600	2639	561	1600	2868	332	1600	2846	354
Capacity Analysis Module:												
Vol/Sat:	0.07	0.32	0.32	0.06	0.16	0.16	0.02	0.24	0.24	0.40	0.25	0.25
Crit Moves:		****		****				****		****		

Newport Banning Ranch
Year 2016 Cumulative Conditions with Project Bluff Road Alternative
PM Peak Hour

Level Of Service Computation Report
ICU 1(Loss as Cycle Length %) Method (Future Volume Alternative)

Intersection #44 Newport Blvd/17th St

Cycle (sec):	120	Critical Vol./Cap.(X):	0.925
Loss Time (sec):	0 (Y+R=4.0 sec)	Average Delay (sec/veh):	xxxxxx
Optimal Cycle:	180	Level Of Service:	E

Street Name:	Newport Boulevard									17th Street								
Approach:	North Bound			South Bound			East Bound			West Bound		
Movement:	L	- T	- R	L	- T	- R	L	- T	- R	L	- T	- R
Control:	Protected			Protected			Protected			Protected		
Rights:	Include			Include			Include			Include		
Min. Green:	0	0	0	0	0	0	0	0	0	0	0	0
Lanes:	1 0	3 1	0	2 0	3 0	1	3 0	1 1	0	2 0	3 0	1
Volume Module:												
Base Vol:	63	1820	169	714	2315	347	707	393	22	276	485	201
Growth Adj:	1.07	1.07	1.07	1.07	1.07	1.07	1.07	1.07	1.07	1.07	1.07	1.07
Initial Bse:	68	1951	181	765	2482	372	758	421	24	296	520	215
Added Vol:	0	63	13	0	80	321	219	64	0	23	91	0
Committed P:	0	67	0	0	51	0	0	0	0	0	0	0
Initial Fut:	68	2081	194	765	2613	693	977	485	24	319	611	215
User Adj:	1.00	1.00	1.00	1.00	1.00	1.00	1.00	1.00	1.00	1.00	1.00	1.00
PHF Adj:	1.00	1.00	1.00	1.00	1.00	1.00	1.00	1.00	1.00	1.00	1.00	1.00
PHF Volume:	68	2081	194	765	2613	693	977	485	24	319	611	215
Reduct Vol:	0	0	0	0	0	0	0	0	0	0	0	0
Reduced Vol:	68	2081	194	765	2613	693	977	485	24	319	611	215
PCE Adj:	1.00	1.00	1.00	1.00	1.00	1.00	1.00	1.00	1.00	1.00	1.00	1.00
MLF Adj:	1.00	1.00	1.00	1.00	1.00	1.00	1.00	1.00	1.00	1.00	1.00	1.00
FinalVolume:	68	2081	194	765	2613	693	977	485	24	319	611	215
Saturation Flow Module:												
Sat/Lane:	1600	1600	1600	1600	1600	1600	1600	1600	1600	1600	1600	1600
Adjustment:	1.00	1.00	1.00	1.00	1.00	1.00	1.00	1.00	1.00	1.00	1.00	1.00
Lanes:	1.00	3.66	0.34	2.00	3.00	1.00	3.00	1.91	0.09	2.00	3.00	1.00
Final Sat.:	1600	5854	546	3200	4800	1600	4800	3052	148	3200	4800	1600
Capacity Analysis Module:												
Vol/Sat:	0.04	0.36	0.36	0.24	0.54	0.43	0.20	0.16	0.16	0.10	0.13	0.13
Crit Moves:		****		****			****				****	

Newport Banning Ranch
Year 2016 Cumulative Conditions with Project Bluff Road Alternative
PM Peak Hour

Level Of Service Computation Report
ICU 1(Loss as Cycle Length %) Method (Future Volume Alternative)

Intersection #45 Orange Ave/17th St

Cycle (sec):	100	Critical Vol./Cap.(X):	0.691
Loss Time (sec):	0 (Y+R=4.0 sec)	Average Delay (sec/veh):	xxxxxx
Optimal Cycle:	74	Level Of Service:	B

Street Name:	Orange Avenue						17th Street					
Approach:	North Bound			South Bound			East Bound			West Bound		
Movement:	L - T - R			L - T - R			L - T - R			L - T - R		
Control:	Prot+Permit			Prot+Permit			Prot+Permit			Prot+Permit		
Rights:	Include			Include			Include			Include		
Min. Green:	0	0	0	0	0	0	0	0	0	0	0	0
Lanes:	1 0 1	1 0		1 0 1	0 1		1 0 2	0 1		1 0 2	0 1	
Volume Module:												
Base Vol:	168	276	68	214	204	121	140	910	157	83	895	198
Growth Adj:	1.07	1.07	1.07	1.07	1.07	1.07	1.07	1.07	1.07	1.07	1.07	1.07
Initial Bse:	180	296	73	229	219	130	150	976	168	89	959	212
Added Vol:	0	0	0	0	0	0	0	76	0	0	113	0
Committed P:	0	0	2	2	0	0	0	5	0	1	4	1
Initial Fut:	180	296	75	231	219	130	150	1057	168	90	1076	213
User Adj:	1.00	1.00	1.00	1.00	1.00	1.00	1.00	1.00	1.00	1.00	1.00	1.00
PHF Adj:	1.00	1.00	1.00	1.00	1.00	1.00	1.00	1.00	1.00	1.00	1.00	1.00
PHF Volume:	180	296	75	231	219	130	150	1057	168	90	1076	213
Reduct Vol:	0	0	0	0	0	0	0	0	0	0	0	0
Reduced Vol:	180	296	75	231	219	130	150	1057	168	90	1076	213
PCE Adj:	1.00	1.00	1.00	1.00	1.00	1.00	1.00	1.00	1.00	1.00	1.00	1.00
MLF Adj:	1.00	1.00	1.00	1.00	1.00	1.00	1.00	1.00	1.00	1.00	1.00	1.00
FinalVolume:	180	296	75	231	219	130	150	1057	168	90	1076	213
Saturation Flow Module:												
Sat/Lane:	1600	1600	1600	1600	1600	1600	1600	1600	1600	1600	1600	1600
Adjustment:	1.00	1.00	1.00	1.00	1.00	1.00	1.00	1.00	1.00	1.00	1.00	1.00
Lanes:	1.00	1.60	0.40	1.00	1.00	1.00	1.00	2.00	1.00	1.00	2.00	1.00
Final Sat.:	1600	2554	646	1600	1600	1600	1600	3200	1600	1600	3200	1600
Capacity Analysis Module:												
Vol/Sat:	0.11	0.12	0.12	0.14	0.14	0.08	0.09	0.33	0.11	0.06	0.34	0.13
Crit Moves:		****		****			****				****	

Newport Banning Ranch
Year 2016 Cumulative Conditions with Project Bluff Road Alternative
PM Peak Hour

Level Of Service Computation Report
ICU 1(Loss as Cycle Length %) Method (Future Volume Alternative)

Intersection #46 Santa Ana Ave/17th St

Cycle (sec):	100	Critical Vol./Cap.(X):	0.681
Loss Time (sec):	0 (Y+R=4.0 sec)	Average Delay (sec/veh):	xxxxxx
Optimal Cycle:	58	Level Of Service:	B

Street Name:	Santa Ana Avenue						17th Street					
Approach:	North Bound			South Bound			East Bound			West Bound		
Movement:	L - T - R			L - T - R			L - T - R			L - T - R		
Control:	Permitted			Permitted			Prot+Permit			Prot+Permit		
Rights:	Include			Include			Include			Include		
Min. Green:	0	0	0	0	0	0	0	0	0	0	0	0
Lanes:	1 0 1	0 1		1 0 1	0 1		1 0 2	0 1		1 0 2	0 1	
Volume Module:												
Base Vol:	126	173	94	115	170	88	96	937	69	147	1137	130
Growth Adj:	1.07	1.07	1.07	1.07	1.07	1.07	1.07	1.07	1.07	1.07	1.07	1.07
Initial Bse:	135	185	101	123	182	94	103	1004	74	158	1219	139
Added Vol:	0	0	0	0	0	0	0	86	0	0	119	0
Committed P:	0	0	5	5	0	0	0	12	0	3	9	3
Initial Fut:	135	185	106	128	182	94	103	1102	74	161	1347	142
User Adj:	1.00	1.00	1.00	1.00	1.00	1.00	1.00	1.00	1.00	1.00	1.00	1.00
PHF Adj:	1.00	1.00	1.00	1.00	1.00	1.00	1.00	1.00	1.00	1.00	1.00	1.00
PHF Volume:	135	185	106	128	182	94	103	1102	74	161	1347	142
Reduct Vol:	0	0	0	0	0	0	0	0	0	0	0	0
Reduced Vol:	135	185	106	128	182	94	103	1102	74	161	1347	142
PCE Adj:	1.00	1.00	1.00	1.00	1.00	1.00	1.00	1.00	1.00	1.00	1.00	1.00
MLF Adj:	1.00	1.00	1.00	1.00	1.00	1.00	1.00	1.00	1.00	1.00	1.00	1.00
FinalVolume:	135	185	106	128	182	94	103	1102	74	161	1347	142
Saturation Flow Module:												
Sat/Lane:	1600	1600	1600	1600	1600	1600	1600	1600	1600	1600	1600	1600
Adjustment:	1.00	1.00	1.00	1.00	1.00	1.00	1.00	1.00	1.00	1.00	1.00	1.00
Lanes:	1.00	1.00	1.00	1.00	1.00	1.00	1.00	2.00	1.00	1.00	2.00	1.00
Final Sat.:	1600	1600	1600	1600	1600	1600	1600	3200	1600	1600	3200	1600
Capacity Analysis Module:												
Vol/Sat:	0.08	0.12	0.07	0.08	0.11	0.06	0.06	0.34	0.05	0.10	0.42	0.09
Crit Moves:		****		****			****				****	

Newport Banning Ranch
Year 2016 Cumulative Conditions with Project Bluff Road Alternative
PM Peak Hour

Level Of Service Computation Report
ICU 1(Loss as Cycle Length %) Method (Future Volume Alternative)

Intersection #47 Tustin Ave/17th St

Cycle (sec):	100	Critical Vol./Cap.(X):	0.737
Loss Time (sec):	0 (Y+R=4.0 sec)	Average Delay (sec/veh):	xxxxxx
Optimal Cycle:	71	Level Of Service:	C

Street Name:	Tustin Avenue						17th Street					
Approach:	North Bound			South Bound			East Bound			West Bound		
Movement:	L - T - R			L - T - R			L - T - R			L - T - R		
Control:	Permitted			Permitted			Prot+Permit			Prot+Permit		
Rights:	Include			Include			Include			Include		
Min. Green:	0	0	0	0	0	0	0	0	0	0	0	0
Lanes:	1 0 0	1 0		1 0	1 0 1		1 0	1 1 0		1 0	1 1 0	
Volume Module:												
Base Vol:	124	157	83	77	111	56	46	996	62	76	1243	82
Growth Adj:	1.07	1.07	1.07	1.07	1.07	1.07	1.07	1.07	1.07	1.07	1.07	1.07
Initial Bse:	133	168	89	83	119	60	49	1068	66	81	1332	88
Added Vol:	0	0	0	0	0	0	0	86	0	0	119	0
Committed P:	0	0	5	5	0	0	0	30	0	3	17	3
Initial Fut:	133	168	94	88	119	60	49	1184	66	84	1468	91
User Adj:	1.00	1.00	1.00	1.00	1.00	1.00	1.00	1.00	1.00	1.00	1.00	1.00
PHF Adj:	1.00	1.00	1.00	1.00	1.00	1.00	1.00	1.00	1.00	1.00	1.00	1.00
PHF Volume:	133	168	94	88	119	60	49	1184	66	84	1468	91
Reduct Vol:	0	0	0	0	0	0	0	0	0	0	0	0
Reduced Vol:	133	168	94	88	119	60	49	1184	66	84	1468	91
PCE Adj:	1.00	1.00	1.00	1.00	1.00	1.00	1.00	1.00	1.00	1.00	1.00	1.00
MLF Adj:	1.00	1.00	1.00	1.00	1.00	1.00	1.00	1.00	1.00	1.00	1.00	1.00
FinalVolume:	133	168	94	88	119	60	49	1184	66	84	1468	91
Saturation Flow Module:												
Sat/Lane:	1600	1600	1600	1600	1600	1600	1600	1600	1600	1600	1600	1600
Adjustment:	1.00	1.00	1.00	1.00	1.00	1.00	1.00	1.00	1.00	1.00	1.00	1.00
Lanes:	1.00	0.64	0.36	1.00	1.00	1.00	1.00	1.89	0.11	1.00	1.88	0.12
Final Sat.:	1600	1027	573	1600	1600	1600	1600	3030	170	1600	3013	187
Capacity Analysis Module:												
Vol/Sat:	0.08	0.16	0.16	0.05	0.07	0.04	0.03	0.39	0.39	0.05	0.49	0.49
Crit Moves:		****		****			****				****	

Newport Banning Ranch
Year 2016 Cumulative Conditions with Project Bluff Road Alternative
PM Peak Hour

Level Of Service Computation Report
ICU 1(Loss as Cycle Length %) Method (Future Volume Alternative)

Intersection #48 Irvine Ave/17th St

Cycle (sec):	100	Critical Vol./Cap.(X):	0.727
Loss Time (sec):	0 (Y+R=4.0 sec)	Average Delay (sec/veh):	xxxxxx
Optimal Cycle:	84	Level Of Service:	C

Street Name:	Irvine Avenue						17th Street					
Approach:	North Bound			South Bound			East Bound			West Bound		
Movement:	L - T - R			L - T - R			L - T - R			L - T - R		
Control:	Protected			Protected			Protected			Protected		
Rights:	Include			Include			Include			Include		
Min. Green:	0	0	0	0	0	0	0	0	0	0	0	0
Lanes:	2 0 2	0 1		2 0 2	0 1		2 0 1	1 0		1 0 1	1 0	
Volume Module:												
Base Vol:	373	623	49	168	528	334	233	570	200	101	646	61
Growth Adj:	1.07	1.07	1.07	1.07	1.07	1.07	1.07	1.07	1.07	1.07	1.07	1.07
Initial Bse:	400	668	53	180	566	358	250	611	214	108	693	65
Added Vol:	5	3	37	2	1	0	0	81	5	22	114	6
Committed P:	0	0	0	8	0	0	14	35	0	0	23	0
Initial Fut:	405	671	90	190	567	358	264	727	219	130	830	71
User Adj:	1.00	1.00	1.00	1.00	1.00	1.00	1.00	1.00	1.00	1.00	1.00	1.00
PHF Adj:	1.00	1.00	1.00	1.00	1.00	1.00	1.00	1.00	1.00	1.00	1.00	1.00
PHF Volume:	405	671	90	190	567	358	264	727	219	130	830	71
Reduct Vol:	0	0	0	0	0	0	0	0	0	0	0	0
Reduced Vol:	405	671	90	190	567	358	264	727	219	130	830	71
PCE Adj:	1.00	1.00	1.00	1.00	1.00	1.00	1.00	1.00	1.00	1.00	1.00	1.00
MLF Adj:	1.00	1.00	1.00	1.00	1.00	1.00	1.00	1.00	1.00	1.00	1.00	1.00
FinalVolume:	405	671	90	190	567	358	264	727	219	130	830	71
Saturation Flow Module:												
Sat/Lane:	1600	1600	1600	1600	1600	1600	1600	1600	1600	1600	1600	1600
Adjustment:	1.00	1.00	1.00	1.00	1.00	1.00	1.00	1.00	1.00	1.00	1.00	1.00
Lanes:	2.00	2.00	1.00	2.00	2.00	1.00	2.00	1.54	0.46	1.00	1.84	0.16
Final Sat.:	3200	3200	1600	3200	3200	1600	3200	2458	742	1600	2946	254
Capacity Analysis Module:												
Vol/Sat:	0.13	0.21	0.06	0.06	0.18	0.22	0.08	0.30	0.30	0.08	0.28	0.28
Crit Moves:	****					****		****		****		

Newport Banning Ranch
Year 2016 Cumulative Conditions with Project Bluff Road Alternative
PM Peak Hour

Level Of Service Computation Report
ICU 1(Loss as Cycle Length %) Method (Future Volume Alternative)

Intersection #49 Placentia Ave/16th St

Cycle (sec):	100	Critical Vol./Cap.(X):	0.466
Loss Time (sec):	0 (Y+R=4.0 sec)	Average Delay (sec/veh):	xxxxxx
Optimal Cycle:	27	Level Of Service:	A

Street Name:	Placentia Avenue						16th Street					
Approach:	North Bound			South Bound			East Bound			West Bound		
Movement:	L - T - R			L - T - R			L - T - R			L - T - R		
Control:	Permitted			Permitted			Permitted			Permitted		
Rights:	Include			Include			Include			Include		
Min. Green:	0	0	0	0	0	0	0	0	0	0	0	0
Lanes:	1 0 1	1 0		1 0 1	1 0		1 0 0	1 0		1 0 0	1 0	
Volume Module:												
Base Vol:	34	530	22	21	381	20	64	42	59	21	28	82
Growth Adj:	1.07	1.07	1.07	1.07	1.07	1.07	1.07	1.07	1.07	1.07	1.07	1.07
Initial Bse:	36	568	24	23	408	21	69	45	63	23	30	88
Added Vol:	-8	-10	0	0	-104	58	25	111	-21	0	206	0
Committed P:	0	28	0	0	9	0	0	0	0	0	0	0
Initial Fut:	28	586	24	23	313	79	94	156	42	23	236	88
User Adj:	1.00	1.00	1.00	1.00	1.00	1.00	1.00	1.00	1.00	1.00	1.00	1.00
PHF Adj:	1.00	1.00	1.00	1.00	1.00	1.00	1.00	1.00	1.00	1.00	1.00	1.00
PHF Volume:	28	586	24	23	313	79	94	156	42	23	236	88
Reduct Vol:	0	0	0	0	0	0	0	0	0	0	0	0
Reduced Vol:	28	586	24	23	313	79	94	156	42	23	236	88
PCE Adj:	1.00	1.00	1.00	1.00	1.00	1.00	1.00	1.00	1.00	1.00	1.00	1.00
MLF Adj:	1.00	1.00	1.00	1.00	1.00	1.00	1.00	1.00	1.00	1.00	1.00	1.00
FinalVolume:	28	586	24	23	313	79	94	156	42	23	236	88
Saturation Flow Module:												
Sat/Lane:	1600	1600	1600	1600	1600	1600	1600	1600	1600	1600	1600	1600
Adjustment:	1.00	1.00	1.00	1.00	1.00	1.00	1.00	1.00	1.00	1.00	1.00	1.00
Lanes:	1.00	1.92	0.08	1.00	1.60	0.40	1.00	0.79	0.21	1.00	0.73	0.27
Final Sat.:	1600	3076	124	1600	2553	647	1600	1259	341	1600	1166	434
Capacity Analysis Module:												
Vol/Sat:	0.02	0.19	0.19	0.01	0.12	0.12	0.06	0.12	0.12	0.01	0.20	0.20
Crit Moves:		****		****			****				****	

Newport Banning Ranch
Year 2016 Cumulative Conditions with Project Bluff Road Alternative
PM Peak Hour

Level Of Service Computation Report
ICU 1(Loss as Cycle Length %) Method (Future Volume Alternative)

Intersection #50 Superior Ave/16th St

Cycle (sec):	100	Critical Vol./Cap.(X):	0.606
Loss Time (sec):	0 (Y+R=4.0 sec)	Average Delay (sec/veh):	xxxxxx
Optimal Cycle:	37	Level Of Service:	B

Street Name:	Superior Avenue						16th Street					
Approach:	North Bound			South Bound			East Bound			West Bound		
Movement:	L - T - R			L - T - R			L - T - R			L - T - R		
Control:	Permitted			Permitted			Permitted			Permitted		
Rights:	Include			Include			Include			Include		
Min. Green:	0	0	0	0	0	0	0	0	0	0	0	0
Lanes:	1 0 2 0 1			1 0 1 1 0			1 0 0 1 0			0 1 0 0 1		
Volume Module:												
Base Vol:	23	699	23	25	864	43	30	94	0	16	87	14
Growth Adj:	1.07	1.07	1.07	1.07	1.07	1.07	1.07	1.07	1.07	1.07	1.07	1.07
Initial Bse:	25	749	25	27	926	46	32	101	0	17	93	15
Added Vol:	0	78	0	0	98	107	54	57	0	0	98	0
Committed P:	2	34	0	0	118	0	0	0	3	0	0	0
Initial Fut:	27	861	25	27	1142	153	86	158	3	17	191	15
User Adj:	1.00	1.00	1.00	1.00	1.00	1.00	1.00	1.00	1.00	1.00	1.00	1.00
PHF Adj:	1.00	1.00	1.00	1.00	1.00	1.00	1.00	1.00	1.00	1.00	1.00	1.00
PHF Volume:	27	861	25	27	1142	153	86	158	3	17	191	15
Reduct Vol:	0	0	0	0	0	0	0	0	0	0	0	0
Reduced Vol:	27	861	25	27	1142	153	86	158	3	17	191	15
PCE Adj:	1.00	1.00	1.00	1.00	1.00	1.00	1.00	1.00	1.00	1.00	1.00	1.00
MLF Adj:	1.00	1.00	1.00	1.00	1.00	1.00	1.00	1.00	1.00	1.00	1.00	1.00
FinalVolume:	27	861	25	27	1142	153	86	158	3	17	191	15
Saturation Flow Module:												
Sat/Lane:	1600	1600	1600	1600	1600	1600	1600	1600	1600	1600	1600	1600
Adjustment:	1.00	1.00	1.00	1.00	1.00	1.00	1.00	1.00	1.00	1.00	1.00	1.00
Lanes:	1.00	2.00	1.00	1.00	1.76	0.24	1.00	0.98	0.02	0.08	0.92	1.00
Final Sat.:	1600	3200	1600	1600	2822	378	1600	1570	30	132	1468	1600
Capacity Analysis Module:												
Vol/Sat:	0.02	0.27	0.02	0.02	0.40	0.40	0.05	0.10	0.10	0.01	0.13	0.01
Crit Moves:	****				****		****				****	

Newport Banning Ranch
Year 2016 Cumulative Conditions with Project Bluff Road Alternative
PM Peak Hour

Level Of Service Computation Report
ICU 1(Loss as Cycle Length %) Method (Future Volume Alternative)

Intersection #51 Newport Blvd/16th St

Cycle (sec):	120	Critical Vol./Cap.(X):	0.620
Loss Time (sec):	0 (Y+R=4.0 sec)	Average Delay (sec/veh):	xxxxxx
Optimal Cycle:	49	Level Of Service:	B

Street Name:	Newport Boulevard						16th Street					
Approach:	North Bound			South Bound			East Bound			West Bound		
Movement:	L - T - R			L - T - R			L - T - R			L - T - R		
Control:	Protected			Protected			Permitted			Permitted		
Rights:	Include			Include			Include			Include		
Min. Green:	0	0	0	0	0	0	0	0	0	0	0	0
Lanes:	1 0 2	1 0		1 0 3	0 1		0 0 1!	0 0		0 0 1!	0 0	
Volume Module:												
Base Vol:	20	1402	50	85	2084	29	36	48	21	20	37	59
Growth Adj:	1.07	1.07	1.07	1.07	1.07	1.07	1.07	1.07	1.07	1.07	1.07	1.07
Initial Bse:	21	1503	54	91	2234	31	39	51	23	21	40	63
Added Vol:	0	76	0	0	103	0	0	0	0	0	0	0
Committed P:	3	67	12	0	51	0	0	0	5	9	0	0
Initial Fut:	24	1646	66	91	2388	31	39	51	28	30	40	63
User Adj:	1.00	1.00	1.00	1.00	1.00	1.00	1.00	1.00	1.00	1.00	1.00	1.00
PHF Adj:	1.00	1.00	1.00	1.00	1.00	1.00	1.00	1.00	1.00	1.00	1.00	1.00
PHF Volume:	24	1646	66	91	2388	31	39	51	28	30	40	63
Reduct Vol:	0	0	0	0	0	0	0	0	0	0	0	0
Reduced Vol:	24	1646	66	91	2388	31	39	51	28	30	40	63
PCE Adj:	1.00	1.00	1.00	1.00	1.00	1.00	1.00	1.00	1.00	1.00	1.00	1.00
MLF Adj:	1.00	1.00	1.00	1.00	1.00	1.00	1.00	1.00	1.00	1.00	1.00	1.00
FinalVolume:	24	1646	66	91	2388	31	39	51	28	30	40	63
Saturation Flow Module:												
Sat/Lane:	1600	1600	1600	1600	1600	1600	1600	1600	1600	1600	1600	1600
Adjustment:	1.00	1.00	1.00	1.00	1.00	1.00	1.00	1.00	1.00	1.00	1.00	1.00
Lanes:	1.00	2.89	0.11	1.00	3.00	1.00	0.33	0.44	0.23	0.23	0.30	0.47
Final Sat.:	1600	4616	184	1600	4800	1600	525	700	374	365	476	759
Capacity Analysis Module:												
Vol/Sat:	0.02	0.36	0.36	0.06	0.50	0.02	0.02	0.07	0.07	0.02	0.08	0.08
Crit Moves:	****				****		****				****	

Newport Banning Ranch
Year 2016 Cumulative Conditions with Project Bluff Road Alternative
PM Peak Hour

Level Of Service Computation Report
ICU 1(Loss as Cycle Length %) Method (Future Volume Alternative)

Intersection #52 Bluff Rd/Victoria St

Cycle (sec):	100	Critical Vol./Cap.(X):	0.582
Loss Time (sec):	0 (Y+R=4.0 sec)	Average Delay (sec/veh):	xxxxxx
Optimal Cycle:	55	Level Of Service:	A

Street Name:	Bluff Road						Victoria St					
Approach:	North Bound			South Bound			East Bound			West Bound		
Movement:	L - T - R			L - T - R			L - T - R			L - T - R		
Control:	Protected			Protected			Protected			Protected		
Rights:	Include			Include			Include			Include		
Min. Green:	0	0	0	0	0	0	0	0	0	0	0	0
Lanes:	0 0 0 0 0			0 0 0 0 0			0 0 2 0 0			0 0 2 0 0		
Volume Module:												
Base Vol:	0	0	0	0	0	0	0	942	0	0	1709	0
Growth Adj:	1.00	1.00	1.00	1.00	1.00	1.00	1.00	1.07	1.00	1.00	1.07	1.00
Initial Bse:	0	0	0	0	0	0	0	1010	0	0	1832	0
Added Vol:	0	0	0	0	0	0	0	35	0	0	30	0
PasserByVol:	0	0	0	0	0	0	0	0	0	0	0	0
Initial Fut:	0	0	0	0	0	0	0	1045	0	0	1862	0
User Adj:	1.00	1.00	1.00	1.00	1.00	1.00	1.00	1.00	1.00	1.00	1.00	1.00
PHF Adj:	1.00	1.00	1.00	1.00	1.00	1.00	1.00	1.00	1.00	1.00	1.00	1.00
PHF Volume:	0	0	0	0	0	0	0	1045	0	0	1862	0
Reduct Vol:	0	0	0	0	0	0	0	0	0	0	0	0
Reduced Vol:	0	0	0	0	0	0	0	1045	0	0	1862	0
PCE Adj:	1.00	1.00	1.00	1.00	1.00	1.00	1.00	1.00	1.00	1.00	1.00	1.00
MLF Adj:	1.00	1.00	1.00	1.00	1.00	1.00	1.00	1.00	1.00	1.00	1.00	1.00
FinalVolume:	0	0	0	0	0	0	0	1045	0	0	1862	0
Saturation Flow Module:												
Sat/Lane:	1600	1600	1600	1600	1600	1600	1600	1600	1600	1600	1600	1600
Adjustment:	1.00	1.00	1.00	1.00	1.00	1.00	1.00	1.00	1.00	1.00	1.00	1.00
Lanes:	0.00	0.00	0.00	0.00	0.00	0.00	0.00	2.00	0.00	0.00	2.00	0.00
Final Sat.:	0	0	0	0	0	0	0	3200	0	0	3200	0
Capacity Analysis Module:												
Vol/Sat:	0.00	0.00	0.00	0.00	0.00	0.00	0.00	0.33	0.00	0.00	0.58	0.00
Crit Moves:							****				****	

Newport Banning Ranch
Year 2016 Cumulative Conditions with Project Bluff Road Alternative
PM Peak Hour

Level Of Service Computation Report
ICU 1(Loss as Cycle Length %) Method (Future Volume Alternative)

Intersection #53 Bluff Rd/19th St

Cycle (sec):	100	Critical Vol./Cap.(X):	0.000
Loss Time (sec):	0 (Y+R=4.0 sec)	Average Delay (sec/veh):	xxxxxx
Optimal Cycle:	0	Level Of Service:	

Street Name:	Bluff Rd						19th Street					
Approach:	North Bound			South Bound			East Bound			West Bound		
Movement:	L - T - R			L - T - R			L - T - R			L - T - R		
Control:	Permitted			Permitted			Permitted			Permitted		
Rights:	Include			Include			Include			Include		
Min. Green:	0	0	0	0	0	0	0	0	0	0	0	0
Lanes:	0 0 0 0 0			0 0 0 0 0			0 0 0 0 0			0 0 0 0 0		
Volume Module:												
Base Vol:	0	0	0	0	0	0	0	0	0	0	0	0
Growth Adj:	0.00	0.00	0.00	0.00	0.00	0.00	0.00	0.00	0.00	0.00	0.00	0.00
Initial Bse:	0	0	0	0	0	0	0	0	0	0	0	0
Added Vol:	0	0	0	0	0	0	0	0	0	0	0	0
PasserByVol:	0	0	0	0	0	0	0	0	0	0	0	0
Initial Fut:	0	0	0	0	0	0	0	0	0	0	0	0
User Adj:	0.00	0.00	0.00	0.00	0.00	0.00	0.00	0.00	0.00	0.00	0.00	0.00
PHF Adj:	0.00	0.00	0.00	0.00	0.00	0.00	0.00	0.00	0.00	0.00	0.00	0.00
PHF Volume:	0	0	0	0	0	0	0	0	0	0	0	0
Reduct Vol:	0	0	0	0	0	0	0	0	0	0	0	0
Reduced Vol:	0	0	0	0	0	0	0	0	0	0	0	0
PCE Adj:	0.00	0.00	0.00	0.00	0.00	0.00	0.00	0.00	0.00	0.00	0.00	0.00
MLF Adj:	0.00	0.00	0.00	0.00	0.00	0.00	0.00	0.00	0.00	0.00	0.00	0.00
FinalVolume:	0	0	0	0	0	0	0	0	0	0	0	0
Saturation Flow Module:												
Sat/Lane:	0	0	0	0	0	0	0	0	0	0	0	0
Adjustment:	1.00	1.00	1.00	1.00	1.00	1.00	1.00	1.00	1.00	1.00	1.00	1.00
Lanes:	0.00	0.00	0.00	0.00	0.00	0.00	0.00	0.00	0.00	0.00	0.00	0.00
Final Sat.:	0	0	0	0	0	0	0	0	0	0	0	0
Capacity Analysis Module:												
Vol/Sat:	0.00	0.00	0.00	0.00	0.00	0.00	0.00	0.00	0.00	0.00	0.00	0.00
Crit Moves:												

Newport Banning Ranch
Year 2016 Cumulative Conditions with Project Bluff Road Alternative
PM Peak Hour

Level Of Service Computation Report
ICU 1(Loss as Cycle Length %) Method (Future Volume Alternative)

Intersection #54 Bluff Rd/17th St

Cycle (sec):	100	Critical Vol./Cap.(X):	0.165
Loss Time (sec):	0 (Y+R=4.0 sec)	Average Delay (sec/veh):	xxxxxx
Optimal Cycle:	17	Level Of Service:	A

Street Name:	Bluff Road						17th Street					
Approach:	North Bound			South Bound			East Bound			West Bound		
Movement:	L - T - R			L - T - R			L - T - R			L - T - R		
Control:	Permitted			Permitted			Permitted			Permitted		
Rights:	Include			Include			Include			Include		
Min. Green:	0	0	0	0	0	0	0	0	0	0	0	0
Lanes:	1 0 1	1 0		1 0 0	1 0		0 0 1!	0 0		1 0 1	0 1	
Volume Module:												
Base Vol:	0	0	0	0	0	0	0	0	0	0	0	0
Growth Adj:	1.00	1.00	1.00	1.00	1.00	1.00	1.00	1.00	1.00	1.00	1.00	1.00
Initial Bse:	0	0	0	0	0	0	0	0	0	0	0	0
Added Vol:	0	55	80	0	41	0	0	11	0	156	19	0
Internal Ca:	5	3	3	0	6	7	5	3	3	3	2	0
Initial Fut:	5	58	83	0	47	7	5	14	3	159	21	0
User Adj:	1.00	1.00	1.00	1.00	1.00	1.00	1.00	1.00	1.00	1.00	1.00	1.00
PHF Adj:	1.00	1.00	1.00	1.00	1.00	1.00	1.00	1.00	1.00	1.00	1.00	1.00
PHF Volume:	5	58	83	0	47	7	5	14	3	159	21	0
Reduct Vol:	0	0	0	0	0	0	0	0	0	0	0	0
Reduced Vol:	5	58	83	0	47	7	5	14	3	159	21	0
PCE Adj:	1.00	1.00	1.00	1.00	1.00	1.00	1.00	1.00	1.00	1.00	1.00	1.00
MLF Adj:	1.00	1.00	1.00	1.00	1.00	1.00	1.00	1.00	1.00	1.00	1.00	1.00
FinalVolume:	5	58	83	0	47	7	5	14	3	159	21	0
Saturation Flow Module:												
Sat/Lane:	1600	1600	1600	1600	1600	1600	1600	1600	1600	1600	1600	1600
Adjustment:	1.00	1.00	1.00	1.00	1.00	1.00	1.00	1.00	1.00	1.00	1.00	1.00
Lanes:	1.00	1.00	1.00	1.00	0.87	0.13	0.23	0.63	0.14	1.00	1.00	1.00
Final Sat.:	1600	1600	1600	1600	1393	207	364	1018	218	1600	1600	1600
Capacity Analysis Module:												
Vol/Sat:	0.00	0.04	0.05	0.00	0.03	0.03	0.00	0.01	0.01	0.10	0.01	0.00
Crit Moves:			****	****				****		****		

Newport Banning Ranch
Year 2016 Cumulative Conditions with Project Bluff Road Alternative
PM Peak Hour

Level Of Service Computation Report
2000 HCM Unsignalized Method (Future Volume Alternative)

Intersection #55 Bluff Rd/16th St

Average Delay (sec/veh): 6.3 Worst Case Level Of Service: C[19.6]

Street Name:	Bluff Road						16th Street					
Approach:	North Bound			South Bound			East Bound			West Bound		
Movement:	L - T - R			L - T - R			L - T - R			L - T - R		
Control:	Uncontrolled			Uncontrolled			Stop Sign			Stop Sign		
Rights:	Include			Include			Include			Include		
Lanes:	1 0 1	1 0		1 0 1	1 0		0 0 1!	0 0		0 0 1!	0 0	
Volume Module:												
Base Vol:	0	0	0	0	0	0	0	0	0	0	0	0
Growth Adj:	1.00	1.00	1.00	1.00	1.00	1.00	1.00	1.00	1.00	1.00	1.00	1.00
Initial Bse:	0	0	0	0	0	0	0	0	0	0	0	0
Added Vol:	25	267	27	79	287	0	0	19	14	69	35	144
Internal Ca:	0	9	0	0	12	4	2	0	0	0	0	0
Initial Fut:	25	276	27	79	299	4	2	19	14	69	35	144
User Adj:	1.00	1.00	1.00	1.00	1.00	1.00	1.00	1.00	1.00	1.00	1.00	1.00
PHF Adj:	1.00	1.00	1.00	1.00	1.00	1.00	1.00	1.00	1.00	1.00	1.00	1.00
PHF Volume:	25	276	27	79	299	4	2	19	14	69	35	144
Reduct Vol:	0	0	0	0	0	0	0	0	0	0	0	0
FinalVolume:	25	276	27	79	299	4	2	19	14	69	35	144
Critical Gap Module:												
Critical Gp:	4.1	xxxx	xxxxx	4.1	xxxx	xxxxx	7.5	6.5	6.9	7.5	6.5	6.9
FollowUpTim:	2.2	xxxx	xxxxx	2.2	xxxx	xxxxx	3.5	4.0	3.3	3.5	4.0	3.3
Capacity Module:												
Cnflict Vol:	303	xxxx	xxxxx	303	xxxx	xxxxx	665	812	152	657	801	152
Potent Cap.:	1269	xxxx	xxxxx	1269	xxxx	xxxxx	350	315	874	354	320	874
Move Cap.:	1269	xxxx	xxxxx	1269	xxxx	xxxxx	249	290	874	311	294	874
Volume/Cap:	0.02	xxxx	xxxx	0.06	xxxx	xxxx	0.01	0.07	0.02	0.22	0.12	0.16
Level Of Service Module:												
2Way95thQ:	0.1	xxxx	xxxxx	0.2	xxxx	xxxxx	xxxx	xxxx	xxxxx	xxxx	xxxx	xxxxx
Control Del:	7.9	xxxx	xxxxx	8.0	xxxx	xxxxx	xxxxx	xxxx	xxxxx	xxxxx	xxxx	xxxxx
LOS by Move:	A	*	*	A	*	*	*	*	*	*	*	*
Movement:	LT - LTR - RT			LT - LTR - RT			LT - LTR - RT			LT - LTR - RT		
Shared Cap.:	xxxx	xxxx	xxxxx	xxxx	xxxx	xxxxx	xxxx	391	xxxxx	xxxx	491	xxxxx
SharedQueue:	xxxxx	xxxx	xxxxx	xxxxx	xxxx	xxxxx	xxxxx	0.3	xxxxx	xxxxx	2.8	xxxxx
Shrd ConDel:	xxxxx	xxxx	xxxxx	xxxxx	xxxx	xxxxx	xxxxx	15.1	xxxxx	xxxxx	19.6	xxxxx
Shared LOS:	*	*	*	*	*	*	*	C	*	*	C	*
ApproachDel:	xxxxxx			xxxxxx			15.1			19.6		
ApproachLOS:	*			*			C			C		

Note: Queue reported is the number of cars per lane.

Newport Banning Ranch
Year 2016 Cumulative Conditions with Project Bluff Road Alternative
PM Peak Hour

Level Of Service Computation Report
ICU 1(Loss as Cycle Length %) Method (Future Volume Alternative)

Intersection #56 Bluff Rd/15th St

Cycle (sec):	100	Critical Vol./Cap.(X):	0.276
Loss Time (sec):	0 (Y+R=4.0 sec)	Average Delay (sec/veh):	xxxxxx
Optimal Cycle:	26	Level Of Service:	A

Street Name:	Bluff Road						15th Street					
Approach:	North Bound			South Bound			East Bound			West Bound		
Movement:	L - T - R			L - T - R			L - T - R			L - T - R		
Control:	Split Phase			Split Phase			Permitted			Permitted		
Rights:	Include			Include			Include			Include		
Min. Green:	0	0	0	0	0	0	0	0	0	0	0	0
Lanes:	0 0 0 0 0			1 0 0 0 2			2 0 2 0 0			0 0 2 1 0		
Volume Module:												
Base Vol:	0	0	0	0	0	0	0	0	0	0	0	0
Growth Adj:	1.00	1.00	1.00	1.00	1.00	1.00	1.00	1.00	1.00	1.00	1.00	1.00
Initial Bse:	0	0	0	0	0	0	0	0	0	0	0	0
Added Vol:	0	0	0	28	0	365	315	123	0	0	253	50
Internal Ca:	0	0	0	0	0	1	1	0	0	0	0	0
Initial Fut:	0	0	0	28	0	366	316	123	0	0	253	50
User Adj:	1.00	1.00	1.00	1.00	1.00	1.00	1.00	1.00	1.00	1.00	1.00	1.00
PHF Adj:	1.00	1.00	1.00	1.00	1.00	1.00	1.00	1.00	1.00	1.00	1.00	1.00
PHF Volume:	0	0	0	28	0	366	316	123	0	0	253	50
Reduct Vol:	0	0	0	0	0	0	0	0	0	0	0	0
Reduced Vol:	0	0	0	28	0	366	316	123	0	0	253	50
PCE Adj:	1.00	1.00	1.00	1.00	1.00	1.00	1.00	1.00	1.00	1.00	1.00	1.00
MLF Adj:	1.00	1.00	1.00	1.00	1.00	1.00	1.00	1.00	1.00	1.00	1.00	1.00
FinalVolume:	0	0	0	28	0	366	316	123	0	0	253	50
Saturation Flow Module:												
Sat/Lane:	1600	1600	1600	1600	1600	1600	1600	1600	1600	1600	1600	1600
Adjustment:	1.00	1.00	1.00	1.00	1.00	1.00	1.00	1.00	1.00	1.00	1.00	1.00
Lanes:	0.00	0.00	0.00	1.00	0.00	2.00	2.00	2.00	0.00	0.00	2.50	0.50
Final Sat.:	0	0	0	1600	0	3200	3200	3200	0	0	4008	792
Capacity Analysis Module:												
Vol/Sat:	0.00	0.00	0.00	0.02	0.00	0.11	0.10	0.04	0.00	0.00	0.06	0.06
Crit Moves:						****	****				****	

Newport Banning Ranch
Year 2016 Cumulative Conditions with Project Bluff Road Alternative
PM Peak Hour

Level Of Service Computation Report
ICU 1(Loss as Cycle Length %) Method (Future Volume Alternative)

Intersection #57 Bluff Rd/W. Coast Hwy

Cycle (sec):	120	Critical Vol./Cap.(X):	0.839
Loss Time (sec):	0 (Y+R=4.0 sec)	Average Delay (sec/veh):	xxxxxx
Optimal Cycle:	142	Level Of Service:	D

Street Name:	Bluff Road						W. Coast Highway					
Approach:	North Bound			South Bound			East Bound			West Bound		
Movement:	L - T - R			L - T - R			L - T - R			L - T - R		
Control:	Split Phase			Split Phase			Protected			Protected		
Rights:	Include			Include			Include			Include		
Min. Green:	0	0	0	0	0	0	0	0	0	0	0	0
Lanes:	0 0 0 0 0			2 0 0 0 2			2 0 3 0 0			0 0 3 0 1		
Volume Module:												
Base Vol:	0	0	0	0	0	0	0	1487	0	0	2818	0
Growth Adj:	1.00	1.00	1.00	1.00	1.00	1.00	1.00	1.07	1.00	1.00	1.07	1.00
Initial Bse:	0	0	0	0	0	0	0	1594	0	0	3021	0
Added Vol:	0	0	0	116	0	462	323	68	0	0	-170	184
PasserByVol:	0	0	0	0	0	0	0	0	0	0	0	0
Initial Fut:	0	0	0	116	0	462	323	1662	0	0	2851	184
User Adj:	1.00	1.00	1.00	1.00	1.00	1.00	1.00	1.00	1.00	1.00	1.00	1.00
PHF Adj:	1.00	1.00	1.00	1.00	1.00	1.00	1.00	1.00	1.00	1.00	1.00	1.00
PHF Volume:	0	0	0	116	0	462	323	1662	0	0	2851	184
Reduct Vol:	0	0	0	0	0	0	0	0	0	0	0	0
Reduced Vol:	0	0	0	116	0	462	323	1662	0	0	2851	184
PCE Adj:	1.00	1.00	1.00	1.00	1.00	1.00	1.00	1.00	1.00	1.00	1.00	1.00
MLF Adj:	1.00	1.00	1.00	1.00	1.00	1.00	1.00	1.00	1.00	1.00	1.00	1.00
FinalVolume:	0	0	0	116	0	462	323	1662	0	0	2851	184
Saturation Flow Module:												
Sat/Lane:	1600	1600	1600	1600	1600	1600	1600	1600	1600	1600	1600	1600
Adjustment:	1.00	1.00	1.00	1.00	1.00	1.00	1.00	1.00	1.00	1.00	1.00	1.00
Lanes:	0.00	0.00	0.00	2.00	0.00	2.00	2.00	3.00	0.00	0.00	3.00	1.00
Final Sat.:	0	0	0	3200	0	3200	3200	4800	0	0	4800	1600
Capacity Analysis Module:												
Vol/Sat:	0.00	0.00	0.00	0.04	0.00	0.14	0.10	0.35	0.00	0.00	0.59	0.12
Crit Moves:						****	****				****	

Newport Banning Ranch
Year 2016 Cumulative Conditions with Project Bluff Road Alternative
PM Peak Hour

Level Of Service Computation Report
2000 HCM 4-Way Stop Method (Future Volume Alternative)

Intersection #58 Monrovia Ave/15th Street

Cycle (sec):	100	Critical Vol./Cap.(X):	0.420
Loss Time (sec):	0 (Y+R=4.0 sec)	Average Delay (sec/veh):	9.7
Optimal Cycle:	0	Level Of Service:	A

Street Name:	Monrovia Ave						15th Street					
Approach:	North Bound			South Bound			East Bound			West Bound		
Movement:	L - T - R			L - T - R			L - T - R			L - T - R		
Control:	Stop Sign			Stop Sign			Stop Sign			Stop Sign		
Rights:	Include			Include			Include			Include		
Min. Green:	0	0	0	0	0	0	0	0	0	0	0	0
Lanes:	0 0 0 1 0			0 0 1! 0 0			0 1 0 0 0			0 0 1! 0 0		
Volume Module: >> Count Date: 4 May 2011 << Existing PM Peak Hour												
Base Vol:	0	5	17	92	5	1	9	7	0	11	2	42
Growth Adj:	1.00	1.00	1.00	1.00	1.00	1.00	1.00	1.00	1.00	1.00	1.00	1.00
Initial Bse:	0	5	17	92	5	1	9	7	0	11	2	42
Added Vol:	0	0	0	-3	0	53	20	131	0	0	251	29
PasserByVol:	0	0	0	0	0	0	0	0	0	0	0	0
Initial Fut:	0	5	17	89	5	54	29	138	0	11	253	71
User Adj:	1.00	1.00	1.00	1.00	1.00	1.00	1.00	1.00	1.00	1.00	1.00	1.00
PHF Adj:	1.00	1.00	1.00	1.00	1.00	1.00	1.00	1.00	1.00	1.00	1.00	1.00
PHF Volume:	0	5	17	89	5	54	29	138	0	11	253	71
Reduct Vol:	0	0	0	0	0	0	0	0	0	0	0	0
Reduced Vol:	0	5	17	89	5	54	29	138	0	11	253	71
PCE Adj:	1.00	1.00	1.00	1.00	1.00	1.00	1.00	1.00	1.00	1.00	1.00	1.00
MLF Adj:	1.00	1.00	1.00	1.00	1.00	1.00	1.00	1.00	1.00	1.00	1.00	1.00
FinalVolume:	0	5	17	89	5	54	29	138	0	11	253	71
Saturation Flow Module:												
Adjustment:	1.00	1.00	1.00	1.00	1.00	1.00	1.00	1.00	1.00	1.00	1.00	1.00
Lanes:	0.00	0.23	0.77	0.61	0.03	0.36	0.17	0.83	0.00	0.03	0.76	0.21
Final Sat.:	0	154	523	408	23	248	127	606	0	26	602	169
Capacity Analysis Module:												
Vol/Sat:	xxxx	0.03	0.03	0.22	0.22	0.22	0.23	0.23	xxxx	0.42	0.42	0.42
Crit Moves:		****			****			****			****	
Delay/Veh:	0.0	7.9	7.9	9.2	9.2	9.2	9.0	9.0	0.0	10.4	10.4	10.4
Delay Adj:	1.00	1.00	1.00	1.00	1.00	1.00	1.00	1.00	1.00	1.00	1.00	1.00
AdjDel/Veh:	0.0	7.9	7.9	9.2	9.2	9.2	9.0	9.0	0.0	10.4	10.4	10.4
LOS by Move:	*	A	A	A	A	A	A	A	*	B	B	B
ApproachDel:		7.9			9.2			9.0			10.4	
Delay Adj:		1.00			1.00			1.00			1.00	
ApprAdjDel:		7.9			9.2			9.0			10.4	
LOS by Appr:		A			A			A			B	
AllWayAvgQ:	0.0	0.0	0.0	0.2	0.2	0.2	0.3	0.3	0.3	0.7	0.7	0.7

Newport Banning Ranch
Year 2016 Cumulative Conditions with Project Bluff Road Alternative
PM Peak Hour

Note: Queue reported is the number of cars per lane.

Newport Banning Ranch
Year 2016 Cumulative Conditions with Project Bluff Road Alternative
PM Peak Hour

Level Of Service Computation Report
ICU 1(Loss as Cycle Length %) Method (Future Volume Alternative)

Intersection #100 Pomona Ave/16th St

Cycle (sec):	100	Critical Vol./Cap.(X):	0.048
Loss Time (sec):	0 (Y+R=4.0 sec)	Average Delay (sec/veh):	xxxxxx
Optimal Cycle:	15	Level Of Service:	A

Street Name:	Pomona Avenue						16th Street					
Approach:	North Bound			South Bound			East Bound			West Bound		
Movement:	L - T - R			L - T - R			L - T - R			L - T - R		
Control:	Permitted			Permitted			Permitted			Permitted		
Rights:	Include			Include			Include			Include		
Min. Green:	0	0	0	0	0	0	0	0	0	0	0	0
Lanes:	0 0 0 0 0			1 0 0 1 0			1 0 0 1 0			0 0 1 0 0		
Volume Module:												
Base Vol:	0	0	0	34	56	15	0	-200	0	0	-200	0
Growth Adj:	1.07	1.07	1.07	1.07	1.07	1.07	1.07	1.07	1.07	1.07	1.07	1.07
Initial Bse:	0	0	0	36	60	16	0	-214	0	0	-214	0
Added Vol:	0	0	0	0	0	0	0	111	0	0	206	0
PasserByVol:	0	0	0	0	0	0	0	0	0	0	0	0
Initial Fut:	0	0	0	36	60	16	0	-103	0	0	-8	0
User Adj:	1.00	1.00	1.00	1.00	1.00	1.00	1.00	0.00	1.00	1.00	0.00	1.00
PHF Adj:	1.00	1.00	1.00	1.00	1.00	1.00	1.00	0.00	1.00	1.00	0.00	1.00
PHF Volume:	0	0	0	36	60	16	0	0	0	0	0	0
Reduct Vol:	0	0	0	0	0	0	0	0	0	0	0	0
Reduced Vol:	0	0	0	36	60	16	0	0	0	0	0	0
PCE Adj:	1.00	1.00	1.00	1.00	1.00	1.00	1.00	0.00	1.00	1.00	0.00	1.00
MLF Adj:	1.00	1.00	1.00	1.00	1.00	1.00	1.00	0.00	1.00	1.00	0.00	1.00
FinalVolume:	0	0	0	36	60	16	0	0	0	0	0	0
Saturation Flow Module:												
Sat/Lane:	1600	1600	1600	1600	1600	1600	1600	1600	1600	1600	1600	1600
Adjustment:	1.00	1.00	1.00	1.00	1.00	1.00	1.00	1.00	1.00	1.00	1.00	1.00
Lanes:	0.00	0.00	0.00	1.00	0.79	0.21	1.00	1.00	0.00	0.00	1.00	0.00
Final Sat.:	0	0	0	1600	1262	338	1600	1600	0	0	1600	0
Capacity Analysis Module:												
Vol/Sat:	0.00	0.00	0.00	0.02	0.05	0.05	0.00	0.00	0.00	0.00	0.00	0.00
Crit Moves:					****							

APPENDIX H

SIGNAL WARRANT WORKSHEETS

TRAFFIC SIGNAL VOLUME WARRANT ANALYSIS (2000 MUTCD)

MAJOR STREET: **19th Street** EB WB # OF APPROACH LANES: **1**

MINOR STREET: **Monrovia Avenue** NB SB # OF APPROACH LANES: **1**

CITY, STATE: **Costa Mesa, CA**

COMMENTS: 2016 Cumulative Conditions With Proposed Project
0

ISOLATED COMMUNITY WITH POPULATION LESS THAN 10,000 (Y OR N): **N**
85TH PERCENTILE SPEED GREATER THAN 40 MPH ON MAJOR STREET (Y OR N) **N**

	MAJOR ST TWO-WAY TRAFFIC	MINOR ST TRAFFIC HEAVY LEG	WARRANT 1 - Condition A, Part 1			WARRANT 1 - Condition B, Part 1			WARRANT 1 - Condition A, Part 2			WARRANT 1 - Condition B, Part 2			WARRANT 2 Four-Hour	WARRANT 3 Peak Hour
			MAIN LINE	SIDE STREET	BOTH MET	MAIN LINE	SIDE STREET	BOTH MET	MAIN LINE	SIDE STREET	BOTH MET	MAIN LINE	SIDE STREET	BOTH MET		
THRESHOLD VALUES			**500**	**150**		**750**	**75**		**400**	**120**		**600**	**60**			
06:00 AM TO 07:00 AM	0	0														
07:00 AM TO 08:00 AM	1,033	218	Y	Y	**Y**	Y	Y	**Y**	Y	Y	**Y**	Y	Y	**Y**	**Y**	**Y**
08:00 AM TO 09:00 AM	0	0														
09:00 AM TO 10:00 AM	0	0														
10:00 AM TO 11:00 AM	0	0														
11:00 AM TO 12:00 PM	0	0														
12:00 PM TO 01:00 PM	0	0														
01:00 PM TO 02:00 PM	0	0														
02:00 PM TO 03:00 PM	0	0														
03:00 PM TO 04:00 PM	0	0														
04:00 PM TO 05:00 PM	950	304	Y	Y	**Y**	Y	Y	**Y**	Y	Y	**Y**	Y	Y	**Y**	**Y**	**Y**
05:00 PM TO 06:00 PM	0	0														
06:00 PM TO 07:00 PM	0	0														
07:00 PM TO 08:00 PM	0	0														
08:00 PM TO 09:00 PM	0	0														
09:00 PM TO 10:00 PM	0	0														
	1,983	522	2	2	**2**	2	2	**2**	2	2	**2**	2	2	**2**	**2**	**2**
			8 HOURS NEEDED			8 HOURS NEEDED			8 HOURS NEEDED for both Condition A & B						4 HRS NEEDED	1 HR NEEDED
			NOT SATISFIED			**NOT SATISFIED**			**NOT SATISFIED**						**NOT SATISFIED**	**SATISFIED**

09/01/11
Kimley-Horn and Associates

TRAFFIC SIGNAL VOLUME WARRANT ANALYSIS (2000 MUTCD)

MAJOR STREET: **17th Street** EB WB # OF APPROACH LANES: **1**

MINOR STREET: **Pomona Avenue** NB SB # OF APPROACH LANES: **1**

CITY, STATE: **Costa Mesa, CA**

COMMENTS: 2016 Cumulative Conditions With Proposed Project
0

ISOLATED COMMUNITY WITH POPULATION LESS THAN 10,000 (Y OR N): **N**
85TH PERCENTILE SPEED GREATER THAN 40 MPH ON MAJOR STREET (Y OR N) **N**

	MAJOR ST TWO-WAY TRAFFIC	MINOR ST TRAFFIC HEAVY LEG	WARRANT 1 - Condition A, Part 1			WARRANT 1 - Condition B, Part 1			WARRANT 1 - Condition A, Part 2			WARRANT 1 - Condition B, Part 2			WARRANT 2 Four-Hour	WARRANT 3 Peak Hour
			MAIN LINE	SIDE STREET	BOTH MET	MAIN LINE	SIDE STREET	BOTH MET	MAIN LINE	SIDE STREET	BOTH MET	MAIN LINE	SIDE STREET	BOTH MET		
THRESHOLD VALUES		→	**500**	**150**		**750**	**75**		**400**	**120**		**600**	**60**			
06:00 AM TO 07:00 AM	0	0														
07:00 AM TO 08:00 AM	991	295	Y	Y	**Y**	Y	Y	**Y**	Y	Y	**Y**	Y	Y	**Y**	**Y**	**Y**
08:00 AM TO 09:00 AM	0	0														
09:00 AM TO 10:00 AM	0	0														
10:00 AM TO 11:00 AM	0	0														
11:00 AM TO 12:00 PM	0	0														
12:00 PM TO 01:00 PM	0	0														
01:00 PM TO 02:00 PM	0	0														
02:00 PM TO 03:00 PM	0	0														
03:00 PM TO 04:00 PM	0	0														
04:00 PM TO 05:00 PM	1,251	219	Y	Y	**Y**	Y	Y	**Y**	Y	Y	**Y**	Y	Y	**Y**	**Y**	**Y**
05:00 PM TO 06:00 PM	0	0														
06:00 PM TO 07:00 PM	0	0														
07:00 PM TO 08:00 PM	0	0														
08:00 PM TO 09:00 PM	0	0														
09:00 PM TO 10:00 PM	0	0														
	2,242	514	2	2	**2**	2	2	**2**	2	2	**2**	2	2	**2**	**2**	**2**
			8 HOURS NEEDED			8 HOURS NEEDED			8 HOURS NEEDED for both Condition A & B						4 HRS NEEDED	1 HR NEEDED
			NOT SATISFIED			**NOT SATISFIED**			**NOT SATISFIED**						**NOT SATISFIED**	**SATISFIED**

09/01/11
Kimley-Horn and Associates